[Guide to the FT7 Yao File]

[The FT7 Yao file is based on 11 sources, all in English. The basic works are by J. C. Mitchell who studied village organization and political structure in the Yao area in 1946-47. Older sources by H. S. Stannus give more general views of Yao culture. Specialized studies by Sanderson, Lawson, and Hetherwick cover religion, kinship, and ceremonial life. Tew presents a summary of Yao culture, drawn from the older literature.

The file is heavily biased toward political and social structure, with lesser emphasis on material culture and other general aspects of culture.

Much of the material, particularly that by Stannus, is mixed with material on the Nyanja and other tribes of the area. The author unfortunately does not always clearly distinguish which tribe he is referring to in the text. --Analyst]

Processed in 1960-61

I. REGION OF MOZAMBIQUE

YAO, MAKUA-LOMWE, MAKONDE

In the region between Lake Nyasa and the east coast of Africa, between the Lukuledi river in the north and the Zambezi in the south, there is a congeries of peoples whose culture is very similar over the whole area. They are the *Makonde* group, the *Yao* and the *Makua-Lomwe* peoples. Of these only the Yao has been studied in detail. The scanty information about the other inhabitants of the region will be summarized after the fuller summary of the Yao material, so that points of similarity and difference may appear more clearly. Fortunately for this procedure the Yao occupy a central position, from which they may be taken to represent in many ways the culture of the neighbouring peoples.

The *Makonde* inhabit the Makondi plateau between the Lukuledi and Ruvuma rivers (39° and 41° longitude). Closely related to them are the *Mavia*, on the plateau of that name, south of the Ruvuma; the *Muera*, north of the Lukuledi river, on the Rondo plateau; and the *Matambwe*, in the Ruvuma valley. It is possible that the *Ngindo*, *Ndonde*, and *Ndendeule* should also be included. This group seems to be culturally and linguistically distinct in several points from the Makua and Lomwe, and the Yao, although they have in common the main features of political and social organization.

The region of the *Yao* is between the Ruvuma, Lujenda, and Luchilingo rivers. They also extend into Nyasaland and Tanganyika Territory.

The *Makua* occupy the area between the Lujenda and Lurio rivers and the coastal strip from the mouth of the Lurio nearly to Quilimano.

The *Lomwe* are sometimes regarded as a sub-branch of the Makua, but probably have as much right to be called a separate tribe as the Yao. They are bordered by the Makua on the north, east, and south, and by Maravi on the west. South of them, around Quilimano and east of the Mlanje mountains, are the *Cuabo*,[1] related to the Makua and Lomwe, and also the Podzo, on the south bank of the Zambezi delta.

The region is forested lightly or heavily, and varies in character according to the elevation, soil, and humidity. The coastal belt from Mozambique northwards has thorn-bush vegetation, thick in parts, giving way to light forest and grassland farther inland. In the uplands there is good forest, broad-leaved and evergreen, and deciduous trees near the lake district. Throughout the territory there are narrow strips of richer vegetation along the watercourses, and along the coast mangrove swamps occur at intervals. In the highlands the mornings and evenings are cool and pleasant for eight months of the year, and it is even cold at night in May and August, temperatures of 50° and 60° F. being common in the day. In the hot season the heat is severe, especially in the valley of the Ruvuma. The mean annual rainfall for Mozambique is 39·50 in. and for Likoma on the lake, 39·9 in.[2]

The people are primarily cultivators, but the Yao keep cattle in the highlands. Both Yao and Makua traded with the Arabs and were energetic slave-raiders. The coast Makua and most of the Yao are Islamized.

[1] *c*- pronounced as *ch*-.

[2] *Handbook of Portuguese East Africa*, 1920, pp. 68–77.

[P. 1]

1: Tew E-4 (no date) 1950 FT7 Yao FT7

105 All these peoples have in common the following points of social organization: matrilineal clans, matrilocal marriage, residence in small villages under independent chiefs or headmen. They have elaborate initiation schools with circumcision for boys, and initiation without an operation for girls. It is mainly by variations in the initiation rites that their cultures can be distinguished from one another. They also distinguish themselves by linguistic variations and by cicatrizations. This is the region of the [301] *pelele*, or lip-ring, although Yao do not wear it.

THE YAO

TRIBAL AND SUB-TRIBAL GROUPINGS AND DEMOGRAPHY

Nomenclature

101 The name of the tribe is spelt and pronounced in a variety of different ways: Yao, Ayo, Veiao, Hiao, Wahiao, Wahaiao, Wahyao, Ayawa, Myao, Achawa, Wajao, Adjao, Mujoa, Mujanos, Adsawa, Adsoa, Mudsau. Sometimes they are referred to by the name of one of the sections of the tribe or of one of the leaders: e.g. Amachinga, Amangoche, Massaninga (also spelt Amasaninga and Amazaninga), Chiwala, Katule, Kalenje, Mdeule.[1]

Grouping

101 The Yao claim a hill called Yao, near Muembe, between the Rivers Lujenda and 131 Luchilingo, as the original centre from which they dispersed. The main body of Yao 64 is in Portuguese East Africa, and there are large settlements in Tanganyika and Nyasaland.

(*a*) *Portuguese East Africa.* The two main divisions of Yao in Portuguese East Africa are around Muembe and around Mtarika, on the Lujenda river.[2] Immediately south of the lower Ruvuma and at its mouth there are two smaller groups. The Yao occupy most of the territory between the Msinje, Luchilingo, and Ruvuma rivers in their upper courses.[3]

(*b*) *Tanganyika.* Yao entered Tanganyika Territory at two separate periods. In the 1850's they immigrated into Masasi, Chiwata, Newala, Tunduru districts and around Mikindani and Kyonga.[4] The other two groups are more recent comers: one (about 3,000), were taken as war-captives by the Ngoni in Songea district; the other (about 45,000), in the upper Lukuledi valley in Lindi district. They came in from Portuguese East Africa about 1912.[5]

(*c*) *Nyasaland.* There are four main groups of Yao:

(i) The largest group lives in the Southern Province, in upper Shire, and south Nyasa districts.

(ii) The second is near Blantyre, Chiradzulu, Zomba.

(iii) A small group is settled in a belt on the west coast of Lake Nyasa at Domira Bay.[6]

[1] Hockel, 1935, p. 7 n.; Hetherwick, 3, 1902, p. xviii; Abdullah, 1919; Burton, 1873, p. 81 n.
[2] *Handbook of Nyassa Co.*, 1898, p. 20.
[3] Johnson, W. P., 3, 1893.
[4] Weule, 1, 1909, p. 140.
[5] *Handbook of German East Africa*, pp. 56, 62.
[6] Murray, 1932, p. 246; Lawz, 1934, p. 37; Hetherwick, 4, 1927, p. 185.

(iv) Another group is on the south-west side of the lake, north of the Ngoni at Dedza and east of the Ngoni of Ncheu district.[1] 101 131

Although these are the main concentrations of Yao, smaller communities are scattered through most of the districts of south Nyasaland. 619

[103 133]

MAP SHOWING MORE IMPORTANT SITES CONCERNED WITH YAO INFILTRATION

Distribution of Yao shown as a percentage of the population of each district
(1931 Census)

Over 50%:	South Nyasa	75%	10–20%:	Dedza 16%
	Upper Shire	60%		Dowa 8%
				Mlanje 6%
30–40%:	Blantyre	38%		Cholo 5%
20–30%:	Chiradzulu	26%	1–5%:	Chikwawa 2%
	Zomba	26%		Ncheu 1·3%

History

Nothing is known of the history of the Yao before their settlement at Muembe.[2] Their contact with the Arab traders from the east coast had probably continued for 200 years before the Europeans arrived.[3] When Lacerda wrote in 1798 the Yao were 176

[1] Codrington, 1898, p. 512.
[2] Stannus, 4, 1922, p. 231; Heckel, 1935, p. 7; Murray, 1932.
[3] Livingstone in 1866 noted the strength of Arab influence.

2: Mitchell E-5 (1946-1949) 1956 FT7 Yao FT7

posed visit to the Kazembe of Luapula regions, known then as the Wisa country. It is quite obvious that the Yao were serious competitors with the Portuguese for the land trade. Laçerda writes: 175

> The dry goods hitherto imported into this country [i.e. Wisa country], have been bought by the Mujao, indirectly or directly, from the Arabs of Zanzibar and its vicinity. Hence these people received all the ivory exported from the possessions of the Casembe; whereas formerly it passed in great quantities through our port of Mozambique.[1]

It is reasonable to assume that because of their geographical position the Yao had conducted a considerable trade between the interior and the coast, mainly cloth and guns for slaves and ivory—the two were inseparable since the cheapest means of transporting ivory to the coast was by slaves. The Yao trade in slaves led to their major conflict with the British.

When Livingstone made his expedition up the Rovuma in 1866, he found abundant evidence of the influence of the Arabs. Speaking of the Yao chief Mataka, he says: 'He gave me a square house to live in, and indeed most of the houses here are square, for the Arabs are imitated in everything.'[2] Livingstone mentions in particular the trade in slaves that the Yao were conducting in Kilwa. He records that:

> The Waiyau generally are still the most active agents the slave-traders have. The caravan leaders from Kilwa arrive at a Waiyau village, show the goods they have brought, are treated liberally by the elders and told to wait and enjoy themselves, slaves enough to purchase all will be procured: then a foray is made against the Manganja who have few or no guns. The Waiyau who come against them are abundantly supplied with both by their coast guests. Several of the low coast Arabs, who differ in nothing from the Waiyau, usually accompany the foray, and do business on their own account.[3]

Even before Livingstone had made his expedition up the Rovuma Valley, there had been a large-scale movement in all directions of the Yao from their traditional home. The tradition is that the name Yao is taken from a hill, grass-covered but 175 101

[1] Burton, *Laçerda's Journey*.

[2] Waller, H., *The Last Journals of David Livingstone in Central Africa from 1865 until his Death*, John Murray (London, 1874), 73.

[3] Waller, *Last Journals*, 78.

2: Mitchell E-5 (1946-1949) 1956 FT7 Yao FT7

treeless, which is situated somewhere between Mwembe (in Portuguese East Africa) and the Luchilingo Range.[1]

It is convenient to divide the history of the Yao into two major episodes: firstly the movement from the Yao Hill to other hills, and secondly the movement into and within the Nyasaland Protectorate.

Episode I: The Scattering of the Tribes from the Yao Hill

The exact cause of the scattering of the tribes from their traditional home is not clear. Yohannah B. Abdallah suggests that it must have been some internal dissension.[2] Whatever the cause, the tribe broke up into a number of sections, each of which settled at yet another hill from which it took its name. Abdallah lists ten divisions [3] but we need consider only the four that penetrated into British Nyasaland.

These were:

1. The *Achisi Yao*, who settled at Mchisi hill.
2. The *Amasaninga Yao*, who settled near the Lisaninga hill (near the Lutwisi River in Portuguese East Africa).
3. The *Amangoche Yao*, who settled at Mount Mangoche near Fort Johnston, south of Lake Nyasa.
4. The *Amachinga Yao*, who settled near the Mandimba hill. They are called Amachinga because of the serrated edge of the range in which the Mandimba hill is situated. [*Licinga*—a fence.]

Episode II: The Displacement of the Divisions from their Homes [4]

In time, each of the four sections mentioned found its way into Nyasaland. Briefly the details are:

1. The *Achisi Yao* are represented in Nyasaland by the people under Native Authority Katuli in Fort Johnston district. The 1945 Census showed that there were 12,187 Yao under this chief, i.e. 4·3 per cent of the total Yao population of British Nyasaland. However, not all Yao under Katuli are Achisi Yao, and there are no doubt Achisi Yao elsewhere in small numbers; but even

[1] Abdallah, *Chilkala cha Wayao*, 7, edited and translated by Meredith Sanderson as *The History of the Yao*, Government Printer (Zomba, 1919).

[2] Abdallah, *Chilkala*, 8. [3] Abdallah, *Chilkala*, 9.

[4] For information on areas which I did not visit I have drawn heavily from the Administrative file 'Historical Notes on Districts'.

3: Stanzus D-5 (ca. 1912) 1922 FT7 Yao FT7

114 southern part of that territory by Dr. Karl Weule. I have not had access to Weule's official reports but judging from Miss Werner's translation of his popular edition,[1] the book shows a good deal of evidence of inaccurate information, or perhaps it would be better to say, evidence of want of extensive observation, and all the strictures which his translator passes upon the book[2] are well deserved. I am inclined to think that much of what Weule describes in connection with various tribes including the Wayao bears witness to considerable modification by intermixture, and it may be interesting to compare his account of Yao customs with my own.

Duff Macdonald,[3] then, remains the one author whose writings are of value to the student of the Wayao of Nyasaland, and one cannot help feeling that the ethnological character of his book suffers from the attitude which he, in common with most missionaries, takes in regard to many native customs. I believe that if missionaries, instead of turning away their faces in horror, had regarded these practices with an open mind, they would have found that their veiled statements were exaggerations of the truth, and that the old social code of the Yao native would compare favorably with the order of things in most civilised countries.

Morals are after all only the laws that regulate the social welfare of a community and there can be no theoretically perfect code of morals which does not take into consideration the living conditions of the community to which it is applied. Before the ties of custom which bound their social system were cut by European government and missionary influence, I think the natives of Nyasaland sinned against their code of morals comparatively seldom. The present time is one of transition. Freed from old customs and beliefs, and with nothing of equal strength to take their place, the younger generation of natives has suffered and only time with just rule and efficient education can raise them to the higher moral standard which European influence strives to impose upon them.

The old order is passing rapidly and I therefore make no apologies for recording my observations, since the time will soon come when the things I speak of will be entirely forgotten. I find I have gone over much of the ground covered by Macdonald, but in most cases, I believe that I can add many details which may be of value to ethnologists.

101 **Divisions and History of the Wayao.** In regard to the question of tribal names, I think it is perhaps better to reserve the word *Wayao* to denote the whole Yao family and give to each section of the tribe the designation by which it is known to all its members. Thus the name Amangoche should be applied to the Yao people settled around Blantyre, while the Yao about whom I shall speak belong to that branch of the tribe known as Amachinga, now living near Zomba under their chief, Malemya. These two sections, together with a third, to the north, the Amasininga, contain all the Yao of Nyasaland. (Pl. IX)

[1] Karl Weule, Native Life in East Africa, tr. by Alice Werner, London, 1908.
[2] Ibid., p. xiii-xiv.
[3] Op. cit.

101
102
131

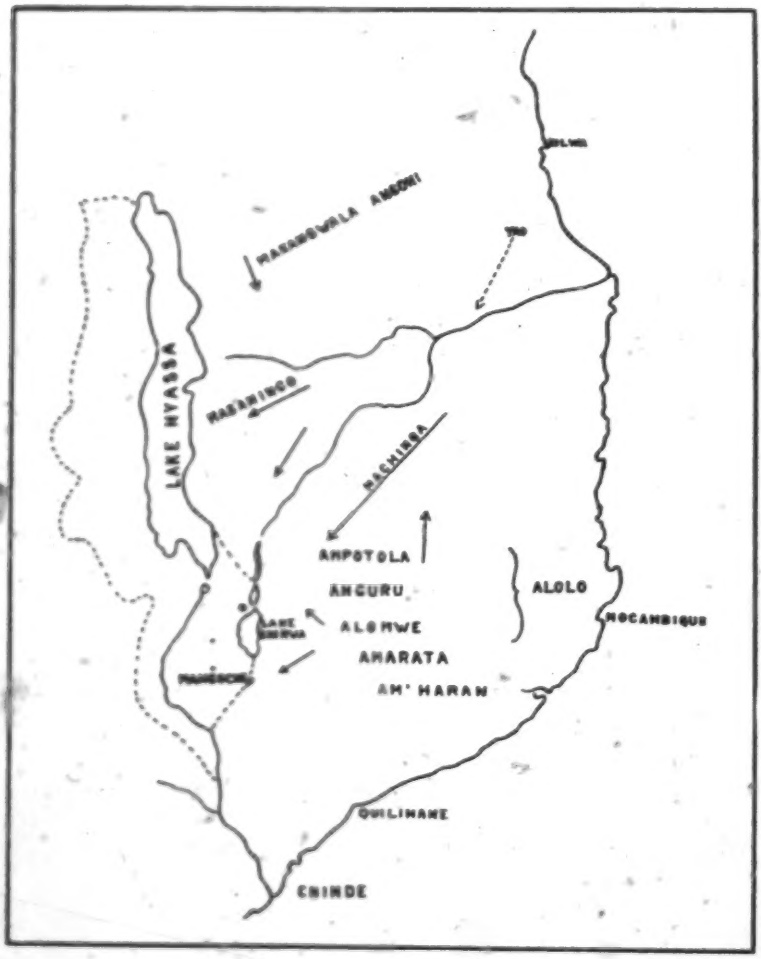

DISTRIBUTION OF THE YAO IN NYASALAND

[End Plate 9]

8:Mitchell E-5 (1946-1947) 1949 FT7 Yao FT7

[P.141 A]

THE POLITICAL ORGANIZATION OF THE YAO OF SOUTHERN NYASALAND[1]

J. CLYDE MITCHELL

I. OUTLINE OF THE GENERAL CULTURAL BACKGROUND

[1] I have been helped and stimulated in the preparation of this paper by my colleagues of the Rhodes-Livingstone Institute, Dr. E. Colson and Mr. J. A. Barnes and by the staff of the Institute of Social Anthropology, Oxford, Prof. E. E. Evans-Pritchard, Dr. M. Fortes and Dr. Max Gluckman. I am especially indebted to Dr. Max Gluckman who was Director of the Rhodes-Livingstone Institute when I joined it, and who gave much of his time to clarifying and developing the presentation of this paper.

[2] Mainly Yao, Nguru and Nyanja. The proportions are given in Table 1 and their relations briefly discussed later (p. 16). In general their cultural backgrounds are similar and what I have said of the Yao is true of the others.

[3] "The Outline of the Social Organization of the Yao of Southern Nyasaland" in *Seven Tribes of British Central Africa*, ed. E. Colson, (London : Oxford University Press, forthcoming).

[4] The position of the village headman in the internal structure of Yao villages is more fully described in my contribution to the symposium, "The Village Headman in British Central Africa" (with M. GLUCKMAN and J. A. BARNES, *Africa*, 19/1, January 1949.

[101]

8:Mitchell E-5 (1946-1947) 1949
FT7 Yao FT7

[P. 141 B]

101 The people with whom this paper is concerned [2] occupy that part of Nyasaland between the Chikala Range in the South; Mount Mangoche in the North; the Shire River to the West; and the Portuguese East African border to the East. This area is represented on the accompanying diagrammatic map. A more detailed description of the general social organization of the Yao in this area, and of their history and general cultural background is to be published shortly. [3] At
361 this point it is sufficient to say that the Yao are semi-subsistence cultivators living in village settlements ranging from a few huts to sixty or more, with an average of about twelve. This represents say a population average of about 40 per village but ranging from 15 to over 200.
621 These village settlements are inhabited by groups
611 of kinsmen. In general there is a matrilineal core
622 of kinsmen of whom the village headman, who has the same name as the village, is one. In some more complex villages there are subsidiary matrilineages related to the matrilineal core agnatically

8:Mitchell E-5 (1946-1947) 1949
[P.1458] FT7 Yao FT7

III. The Entry OF THE WHITES

175 British started actively to pacify the country, the
648 sons of Mponda were at war with each other and Cingwalungwalu was on the way to dominating the whole of the west of the Shire River bank above the Murchison falls. After the British had demonstrated their efficiency by a few attacks on some of Nkata's forces, Kalembo approached the British leader and complained of the war in his territory. The British forces accordingly attacked and destroyed Cingwalungwalu's forces thereby leaving the way open for Kalembo to establish himself under the British wing as an important chief of the west bank of Lake Malombe. Amongst the chieftancies studied in this paper there appeared to have been no direct use of the British military forces in internal politics.[1] The Whites in this way immediately became a factor in tribal political organization. First of all some chiefs endeavoured to use the military force of the Whites directly in their tribal politics. Later on as military actions came to an end the power of the Whites continued to be tapped by chiefs and other personalities in the political structure in order to manipulate the tribal political set-up to their own advantage. In the main the power of the British Administration though still an active agent in tribal politics is now present as an abstract and invisible but nonetheless potent force. How this is done to-day I hope to be able to show by an analysis of the interaction of chiefs, African civil servants and village headmen.

101 As a foundation to this view of Yao politics,
175 the detailed history of the three chieftains Ka-
619 winga, Liwonde and Nyambi is illuminating. Kawinga, Liwonde and Nyambi all belong to
643 the same division of the Yao tribe, i.e. Macinga. There are about nine such divisions but only four are to be found in Nyasaland. The Acisi live near the Portuguese East African border in the Fort Johnston area (Katuli's area) and the

101 Amasininga in the Makanjila area of Fort Johnston District, i.e. to the east of the south end of
619 the Lake near Fort Maguire. These two divisions
175 are insignificant when compared with the other two divisions in Nyasaland. The third division
643 is the Mangoce Yao now settled around Blantyre, while the last division, the Macinga, are settled between Fort Johnston district and Zomba. These divisions arose from a breaking up of the Yao tribe which originally occupied the territory between the Rovuma and Lujenda Rivers in what is now Portuguese East Africa. These divisions are not very significant to-day. Members of a division recognize that they are more closely related to each other than to the members of another division, but this does not appear to affect modern political life in any way.

619 The first Kawinga, Liwonde and Nkata[1]
175 all belonged to the Macinga division which had settled near the tip of Lake Amaramba where it
551 empties into the Lujenda River. From this place of origin, the groups associated with these early
643 leaders moved into Nyasaland. In addition to belonging to the same division of the Yao tribe the three leaders mentioned also had the same clan-name, viz. *ambeme*.[2] The term that I have translated as clan-name is the Yao word *lukoryo*, which may also be translated as "kind" or "sort". Thus, if one asks a man the "kind" or "sort" of Yao he is, his answer may refer to the major divisions as above, i.e. Macinga or Mangoce or it may refer to the clan-name. Clan-names are inherited matrilineally, but holders of the same name are unable to trace their descent from a common ancestor. People with the same clan-
[582] names formerly did not marry but this prohibition has fallen away. For the commoners the clan-name seems to have lost most of its significance but it is carefully remembered in the royal lines and lines in which the rank of a village headman is passed down.

643 The present Kawinga and the present Liwonde
551 can trace their descent matrilineally from a com-
175

9:Lawson Y-S (ca. 1940)1969 FT7 Yao FT7
MARAVI FR4
[P.180B]

Acknowledgements are due to many African friends who have freely given me information, and especially to Mr. Bennett Malekebu.

Y M 101 131 M [197]

THE present Bantu population of the Shiré Highlands in South Nyasaland consists of four major groups :

1. The Nyanja tribe, the country's earliest known inhabitants, whose language is closely allied to that of the Sena and Tette people on the Zambesi and the Senga on the Loangwa, but whose origin is uncertain. In 1858 Livingstone found various branches of this tribe settled throughout South Nyasaland.

Y [175]

2. The Yao tribe, numbers of whom between 1860 and 1870 were driven southwards from their home in Portuguese East Africa by the neighbouring Amakua 'Walolo. These fugitive Yao fell upon the unwarlike Nyanja, conquered and subjugated their chiefs, and finally settling among them, intermarried to a certain extent.

3. A sprinkling of Ngoni, that branch of the Zulu whose flight from Chaka, wanderings in East Africa and ultimate settlement in Nyasaland and Portuguese East Africa, are familiar history. In the Shiré Highlands Ngoni are found only in small scattered groups, for their real home is the "Angoni Highlands" of central Nyasaland.

4. Recent immigrants from various tribes in Moçambique, given by Nyanja and Yao the indiscriminate name of "Lomwe", (i.e., possibly, "people from Lomwe Hill") or more rudely, "Nguru", (i.e. "people who speak indistinctly, like drunkards").

Y [171] [131] 101

This study was made in the district around Zomba and deals exclusively with the Nyanja and YAO TRIBES, WHO THERE PREDOMINATE

9:Lawson Y-5 (ca. 1940)1949 FT7 Yao FT7
MARAVI FR4

[P. 180C]

and Yao tribes, who there predominate. These peoples seem to have come from different parts of the continent. Their languages, despite a common Bantu descent and much recent borrowing, remain as distinct as possible and are obviously not modern dialects of one more primitive tongue ; their original social structures must, however, have been similar enough to attract them to each other, for they have so intermarried and their customs so fused, that one can now scarcely distinguish their ways of life and village organization. Indeed, while homesteads of apparently pure Nyanja and Yao still predominate, every considerable district contains members of both tribes, with some people, at least, of mixed descent ; moreover, and although one perceive a difference of character and manners, and trace it to the influence of Mohammedanism on the Yaos, one may well be unconsciously exaggerating. This account of relationship terms, (with brief reference to underlying social structure), must be taken, therefore, to cover the fusion of two once-separate tribes, and Nyanja and Yao equivalents must—unless otherwise stated—be understood as identical in meaning. In fact, Nyanja often prefer Yao terms to their own.

How far can one isolate the Nyanja-Yao social structure in order to study it ? Ngoni immigrants in this district are few, and their original patrilineal social system has largely succumbed to the customs of these earlier comers. The matrilineal system of the still more recent and numerous Lomwe immigrants is, I believe, (though my evidence is fragmentary), exerting a considerable influence on the somewhat dissimilar but also matrilineal Nyanja and Yao.

11: Sanderson D-5 (ca.1920) 1920 FT7 Yao FT7

RELATIONSHIPS AMONG THE WAYAO.

By MEREDITH SANDERSON,
Medical Officer, Nyasaland Protectorate.

Introductory.—Various writers have attempted to give English equivalents to the Yao terms describing relationship, or have alluded to the outstanding features of the system, but I am not aware that anybody has hitherto worked out the whole system. 121

Although it is very similar to other classificatory systems, I feel that a description of it may not be quite valueless, more especially on account of the evolutionary changes that are taking place.

The WaYao are a Bantu tribe, exogamous but not totemic, which until the middle of the last century inhabited that part of Central Africa lying to the East of Lake Nyasa, particularly in the valleys of the Lujenda and Rovuma rivers. Up to that time the tribe had not extended far from the area indicated except perhaps in a northerly direction, but owing to constant internecine war in their own territory the Yaos then invaded and conquered a large part of the neighbouring territories, especially to the south, in what is now called Nyasaland. 101 131

I have said that the WaYao are not totemic, and that statement is correct at the present time. Opinions differ, however, as to how recent their loss of totemism is; though their initiation ceremonies are generally regarded as totemic, even there, in my opinion, the evidence is not conclusive, and there remains no suspicion of totemism outside these ceremonies. 171

It should be mentioned that Islam is much more prevalent among the Yaos than among their neighbours, but its influence is not yet so deep-rooted as greatly to obscure the pure tribal customs, except to a certain extent among the rising generation. [177]

To facilitate description the relationships are given in tabular form, the relationship being given with reference to one man or woman. [128]

In Table I, Column 1 describes the relationship, Column 2 gives either the nearest equivalent of the Yao term, or, if none, the actual terms. Columns 3–9 give the various relations of the person named in Column 1, as they would be named by the man or woman under consideration. 601

For example, the brother of (*a*)'s father (Column 1) is regarded as (*a*)'s father (Column 2), the wife of (*a*)'s father's brother is (*a*)'s *akwego* (Column 3), their child a his "brother" or "sister" (Column 4), and so on (see Table I).

1: Tew E-4 (no date) 1950 FT7 Yao FT7

(iv) Another group is on the south-west side of the lake, north of the Ngoni at Dedza and east of the Ngoni of Ncheu district.[1] 101 131 619

Although these are the main concentrations of Yao, smaller communities are scattered through most of the districts of south Nyasaland.

[103 133]

MAP SHOWING MORE IMPORTANT SITES CONCERNED WITH YAO INFILTRATION

Distribution of Yao shown as a percentage of the population of each district
(1931 Census)

Over 50%:	South Nyasa	75%	10–20%:	Dedza 16%
	Upper Shire	60%		Dowa 8%
				Mlanje 6%
30–40%:	Blantyre	38%		Cholo 5%
20–30%:	Chiradzulu	26%	1–5%:	Chikwawa 2%
	Zomba	26%		Ncheu 1·5%

History

Nothing is known of the history of the Yao before their settlement at Muembe.[2] Their contact with the Arab traders from the east coast had probably continued for 200 years before the Europeans arrived.[3] When Lacerda wrote in 1798 the Yao were 176

[1] Codrington, 1898, p. 312.
[2] Stearns, 4, 1922, p. 231; Hackel, 1935, p. 7; Murray, 1932.
[3] Livingstone in 1866 noted the strength of Arab influence.

2: Mitchell E-5 (1946-1949) 1956 FT7 Yao FT7

133
[10A]

MAP I. AFRICA.
The shaded portion shows roughly where the Yao live.

human habitation. Large areas around Lake Shirwa are in fact marshlands in the wet season, and stretches of poor sandy and slightly saline soil during the dry season.

Generally speaking the distribution of surface water throughout this area is variable. The highlands are on the whole well supplied with streams which rise in the mountains and flow

133
312

2: Mitchell E-5 (1946-1949) 1956 FT7 Yao FT7

102
361

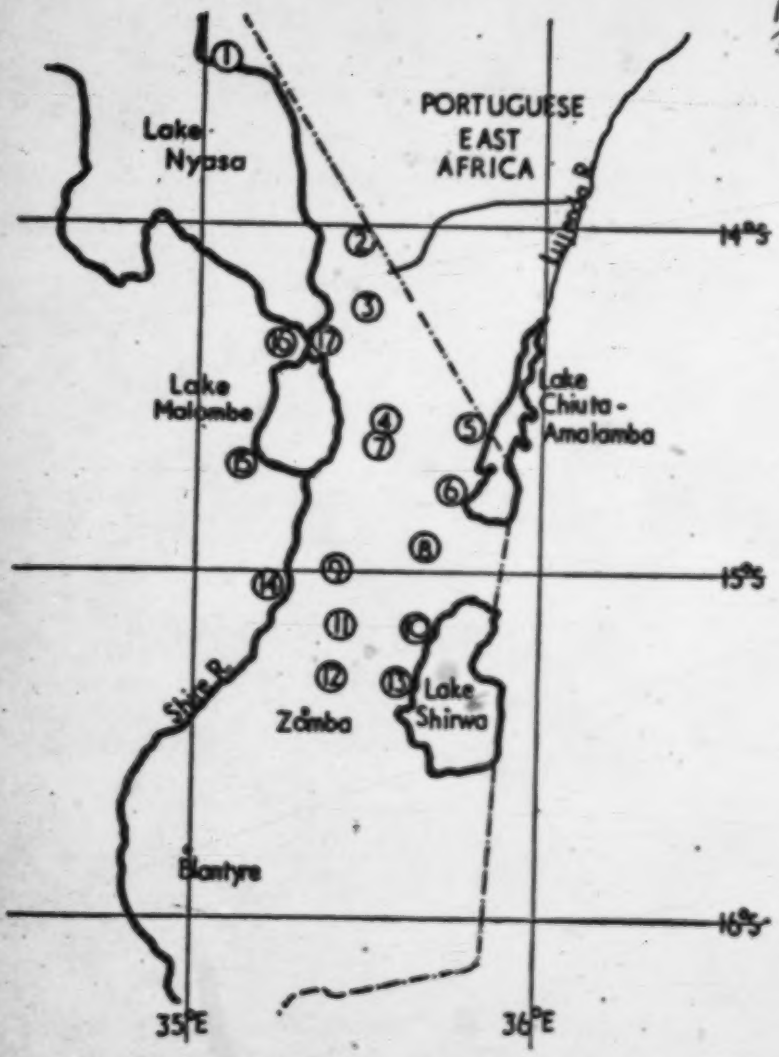

MAP II. SOUTHERN NYASALAND.

Showing the positions of Machinga and other Chiefs.

1. Mokanjila (Mazungu)
2. Katuli (Chisi)
3. Jalasi (Machinga)
4. Nyambi (Machinga)
5. Ngokwe (Mpotola)
6. Chikweo (Mpotola)
7. Chiwalo (Machinga)
8. Kawinga (Machinga)
9. Liwonde (Machinga)
10. Mpon (Machinga)
11. Chamba (Machinga)
12. Malemia (Machinga)
13. Nsumanje (Machinga)
14. Msumala (Machinga)
15. Kalembo (Machinga)
16. Mponda (Machinga)
17. Nankhumba (Nyanja)

[p.15]

101
●102
131

DISTRIBUTION OF THE YAO IN NYASALAND

[End Plate 9]

8:Mitchell E-5 (1946-1947) 1949 FT7 Yao FT7
[P. 148]
902
643
131

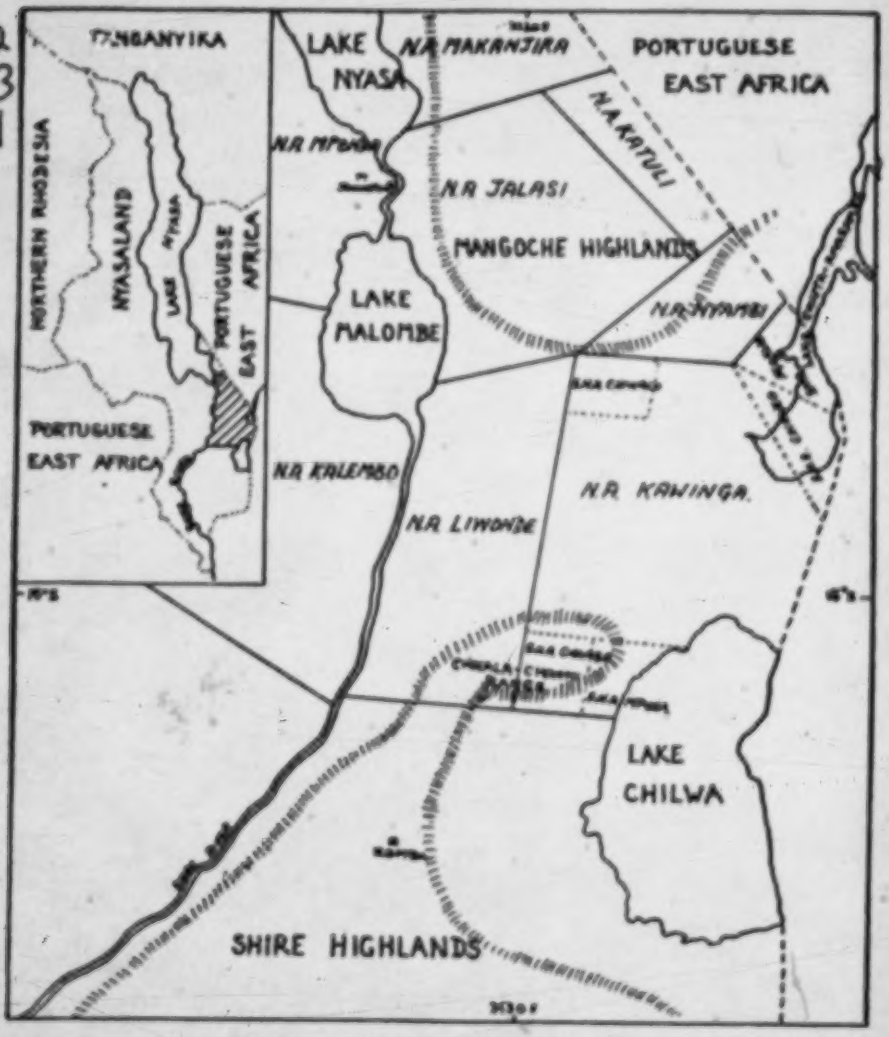

MAP TO SHOW APPROXIMATE POSITION OF CHIEFS

This map is diagrammatic. In other words it shows the relative position of the chiefs and does not pretend to represent the boundaries faithfully.

2: Mitchell E-5 (1946-1949) 1956 FT7 Yao FT7

in the ritual of the chieftaincy more than Newcomers do; provide the chief's councillors; pay rain-levies and in other ways express their closer tie with him. But there is no rigid class structure based on tradition. All villages are liable to break up. If for any reason the village's internal cohesion begins to weaken, its members scatter and it disappears as a political entity. Invader as well as Newcomer villages may thus disintegrate. The smaller sections of an Invader village which now set up villages of their own have to compete with the larger and more united villages of Newcomer origin. Another facet of the political process, therefore, is the continual competition of village headmen who are trying to maintain the unity of the villages under them, and to increase their following, so that their status against the chief and the other village headmen may be enhanced.

Marks of Rank

In the vernacular it is the *name* of the village which is said to be important.[1] This name is usually taken from the founder of the village and is assumed by a new village headman when he succeeds to the position: when a new village is founded the headman gives it his name to distinguish it from the parent village. But the importance that is ascribed to a name is clearly the importance of the corporate group which it represents. The headman is an incumbent of a social status, the prestige of which is drawn from the corporate group which he represents in his public dealings.

The prestige of village headmen is shown particularly in the degree of deference accorded to them by other village headmen. The headman with the highest prestige is of course the chief: the original leader of the Invaders. Below him may be ranked the rest of the village headmen in a relatively fixed pyramidal hierarchy, determined by a number of factors which I shall outline later.

The dress of important headmen is often an indicator of prestige but this criterion is not infallible nowadays when labour migrants, craftsmen and tobacco growers can afford to buy better clothes than many headmen. But it is usually a fairly safe guess that when a man carries a long stick and is dressed in long flowing

[1] *Lina lya lulengwe*—lit. 'the name is great'.

1: Tew E-4 (no date) 1950 FT7 Yao FT7

I. REGION OF MOZAMBIQUE

YAO, MAKUA-LOMWE, MAKONDE

In the region between Lake Nyasa and the east coast of Africa, between the Lukuledi river in the north and the Zambezi in the south, there is a congeries of peoples whose culture is very similar over the whole area. They are the *Makonde* group, the *Yao* and the *Makua-Lomwe* peoples. Of these only the Yao has been studied in detail. The scanty information about the other inhabitants of the region will be summarized after the fuller summary of the Yao material, so that points of similarity and difference may appear more clearly. Fortunately for this procedure the Yao occupy a central position, from which they may be taken to represent in many ways the culture of the neighbouring peoples. 101 171

The *Makonde* inhabit the Makondi plateau between the Lukuledi and Ruvuma rivers (39° and 41° longitude). Closely related to them are the *Mavia*, on the plateau of that name, south of the Ruvuma; the *Mwera*, north of the Lukuledi river, on the Rondo plateau; and the *Matambwe*, in the Ruvuma valley. It is possible that the *Ngindo*, *Ndonde*, and *Ndendeule* should also be included. This group seems to be culturally and linguistically distinct in several points from the Makua and Lomwe, and the Yao, although they have in common the main features of political and social organization. 000

The region of the *Yao* is between the Ruvuma, Lujenda, and Luchilingo rivers. They also extend into Nyasaland and Tanganyika Territory. 131

The *Makua* occupy the area between the Lujenda and Lurio rivers and the coastal strip from the mouth of the Lurio nearly to Quilimano. 000

The *Lomwe* are sometimes regarded as a sub-branch of the Makua, but probably have as much right to be called a separate tribe as the Yao. They are bordered by the Makua on the north, east, and south, and by Maravi on the west. South of them, around Quilimano and east of the Mlanje mountains, are the *Cuabo*,[1] related to the Makua and Lomwe, and also the Podzo, on the south bank of the Zambezi delta.

The region is forested lightly or heavily, and varies in character according to the elevation, soil, and humidity. The coastal belt from Mozambique northwards has thorn-bush vegetation, thick in parts, giving way to light forest and grassland farther inland. In the uplands there is good forest, broad-leaved and evergreen, and deciduous trees near the lake district. Throughout the territory there are narrow strips of richer vegetation along the watercourses, and along the coast mangrove swamps occur at intervals. In the highlands the mornings and evenings are cool and pleasant for eight months of the year, and it is even cold at night in May and August, temperatures of 50° and 60° F. being common in the day. In the hot season the heat is severe, especially in the valley of the Ruvuma. The mean annual rainfall for Mozambique is 39·50 in. and for Likoma on the lake, 39·9 in.[2] 133 132

The people are primarily cultivators, but the Yao keep cattle in the highlands. Both Yao and Makua traded with the Arabs and were energetic slave-raiders. The coast Makua and most of the Yao are Islamized. 105

[1] *c-* pronounced as *ch-*.

[2] *Handbook of Portuguese East Africa*, 1920, pp. 68–77.

[P. 1]

1: Tew E-4 (no date) 1950 FT7 Yao FT7

105 All these peoples have in common the following points of social organization: matrilineal clans, matrilocal marriage, residence in small villages under independent chiefs or headmen. They have elaborate initiation schools with circumcision for boys, and initiation without an operation for girls. It is mainly by variations in the initiation rites that their cultures can be distinguished from one another. They also distinguish themselves by linguistic variations and by cicatrizations. This is the region of the [301] *pelele*, or lip-ring, although Yao do not wear it.

THE YAO

TRIBAL AND SUB-TRIBAL GROUPINGS AND DEMOGRAPHY

NOMENCLATURE

101 The name of the tribe is spelt and pronounced in a variety of different ways: Yao, Ayo, Veiao, Hiao, Wahiao, Wahaiao, Wahyao, Ayawa, Myao, Achawa, Wajao, Adjao, Mujoa, Mujanos, Adsawa, Adsoa, Mudsau. Sometimes they are referred to by the name of one of the sections of the tribe or of one of the leaders: e.g. Amachinga, Amangoche, Massaninga (also spelt Amasaninga and Amazaninga), Chiwala, Katule, Kalenje, Mdeule.[1]

GROUPING

101 131 619 The Yao claim a hill called Yao, near Muembe, between the Rivers Lujenda and Luchilingo, as the original centre from which they dispersed. The main body of Yao is in Portuguese East Africa, and there are large settlements in Tanganyika and Nyasaland.

(*a*) *Portuguese East Africa.* The two main divisions of Yao in Portuguese East Africa are around Muembe and around Mtarika, on the Lujenda river.[2] Immediately south of the lower Ruvuma and at its mouth there are two smaller groups. The Yao occupy most of the territory between the Msinje, Luchilingo, and Ruvuma rivers in their upper courses.[3]

(*b*) *Tanganyika.* Yao entered Tanganyika Territory at two separate periods. In the 1850's they immigrated into Masasi, Chiwata, Newala, Tunduru districts and around Mikindani and Kyonga.[4] The other two groups are more recent comers: one (about 3,000), were taken as war-captives by the Ngoni in Songea district; the other (about 45,000), in the upper Lukuledi valley in Lindi district. They came in from Portuguese East Africa about 1912.[5]

(*c*) *Nyasaland.* There are four main groups of Yao:

(i) The largest group lives in the Southern Province, in upper Shire, and south Nyasa districts.

(ii) The second is near Blantyre, Chiradzulu, Zomba.

(iii) A small group is settled in a belt on the west coast of Lake Nyasa at Domira Bay.[6]

[1] Heckel, 1935, p. 7 n.; Hetherwick, 3, 1902, p. xviii; Abdullah, 1919; Burton, 1873, p. 81 n.
[2] *Handbook of Nyassa Co.*, 1898, p. 20.
[3] Johnson, W. P., 3, 1893.
[4] Weule, 1, 1909, p. 140.
[5] *Handbook of German East Africa*, pp. 56, 62.
[6] Murray, 1932, p. 246; Laws, 1934, p. 37; Hetherwick, 4, 1927, p. 185.

6: Mitchell E-5 (1946-1947) 1949 FT7 Yao FT7

121 impressed on people's memories and remembered by most of the people. Thus it
125 was desirable to find a useful reference date between 1930 and 1940. It might be thought that the death of King George V would be memorable. However, though all who were old enough at the time could remember the witchfinders, only a few could remember the death of King George.

125 This skeleton chronology was filled in by events of more local significance. For example, Kawinga's brick house was built in 1929, the present Nyambi succeeded in 1933, &c. In addition, in particular hamlets there were men who had been in the Army, or had been to work in South Africa or Southern Rhodesia. Usually they could recall the date of going and sometimes of return, though they may have lost count of the intervening years. Such dates were often useful points. A small minority had actually recorded the dates of birth and death of children.

In addition to this, it was possible to fix the ages of the young children by reference
805 to harvests, since the Yao reckon two years in retrospect, 'last year' meaning before the last harvest and 'the year before last' meaning the period before the harvest before last. Before the year before last, all time is merely *kala-kala*, the only indication of the period being the pitch of the voice in which it is said or the presence or absence of an exclamatory 'E!' before speaking.

125 Particular care was taken to secure the ages of women and the dates at which they had borne children. There was, as mentioned above, some reticence in mention-
[124] ing the names of dead children, but this was usually met successfully by questioning the women's male relatives who were generally more communicative on these points.
[128] In spite of the care taken to obtain this information, it was impossible to fix the ages of six women in the sample, and they have been excluded from the major part of the analysis. In addition, there were thirty-nine men who were not available for questioning. These were all adults, the husbands of women in the hamlets. The
●105 Yao are matrilineal and matrilocal, and men tend to spend much of their time away from the hamlet of their relatives-in-law. Since they are in many ways strangers in the hamlets no information could be obtained about them.

2. The General Background to Fertility

All the hamlets visited were occupied by members of the Yao tribe. The Yao are an Islamized people who achieved the questionable distinction of being efficient slave raiders at the end of the nineteenth century. They are a matrilineal and pre-
[361] dominantly matrilocal people living in hamlets of from about 5 to 100 huts or more.

[582] Table I. *Age of Women at First Marriage*

Present age of women	Age of women at first marriage											Total	Median age at first Marriage
	7–10	10–14	14–17	17–17½	17½–20	20–23	23–27	27–27½	27½–30	30–33	Over 33		
Under 30	3	6	5	18	9	4	3	3	..	..	..	53	16·7
30–45	4	6	7	11	4	4	2	3	..	1	3	45	16·3
Over 45	..	2	1	5	8	3	1	2	..	1	..	23	18·6
Totals	7	14	13	34	21	11	8	8	..	2	3	121	17·0

They are semi-subsistence cultivators who own no cattle and whose diet is therefore largely vegetarian, viz. sorghum and maize-meal with ground-nuts and beans and certain leaves together with a small quantity of cassava roots. 105

Marriages are contracted early in life with little difficulty and ceremony. Formerly girls were espoused as mere children, and this still happens, but whether the custom is falling away or not I could not check quantitatively because the memories of the old women who had been married as children forty or fifty years ago could not be relied upon. Table I shows the ages at first marriage for a sample of 121 married women for whom this information was available. 582

Where marriage takes place so early we can expect that the mean age when child-bearing commences will also be early. Table II shows the median age of mothers at the birth of their first child. 163

TABLE II. *Age of Mother at Birth of First child*

Present age-groups of mothers	*Age of mother at birth of first child*									*Total*	*Median age at birth of first child*
	12½–15	*15–17*	*17½–20*	*20–22½*	*22½–25*	*25–27½*	*27½–30*	*30–32½*	*Over 32½*		
Under 30	9	26	12	17	6	4	..	..	..	74	17·9
30–45	10	14	10	9	4	7	5	4	3	66	19·8
Over 45	5	7	9	9	5	6	1	3	1	46	20·6
Totals	24	47	31	35	15	17	6	7	4	186	19·3

From these two tables it is clear that nearly all women in the community are married early and that child-bearing commences very soon after marriage.

Table III shows the conjugal status of all women over the age of 15. 162

TABLE III. *Conjugal Status of all Women over the Age of 15*

Present age-groups	*Never married*	*Wives of*			*Divorcees*	*Widows*	*Total*
		Monogynists	*Polygynists*	*Labour migrants*			
Under 20	23	15	3	4	..	..	45
20–30	3	37	18	9	9	3	79
30–45	1	31	19	5	9	5	70
Over 45	..	14	10	1	11	16	52
Total	27	97	50	19	29	24	246

Here we see that of all women under 45 (194), 141 (73 per cent.) are married, though only 83 (43 per cent.), i.e. the wives of monogynists, have their husbands living permanently with them. Another 40 (20 per cent.) were married to men who were married to other wives, so that while their husbands were not living with them permanently they were nevertheless with them periodically. Eighteen other women (9 per cent.) were married to men who had left to work outside the area and hence were not living with their wives at all at the time of the survey. Visits by men to places of work outside the area may last 2 years or more. It should [595] [591] [167]

1:Murdock--1 E-4 (No date) 1958 F1 Africa
Yao FT7
Yao

x 105

Identification

The Yao (Achawa, Adjao, Adsawa, Adsoa, Ajawa, Ayo, Hiao, Mudsau, Mujano, Mujoa, Myao, Veiao, Wahaiao, Wahiao, Wahyao, Waiyau, Wajao, Wayao) are a Bantu tribe, reported in 1945 to number 280,000 in Nyasaland, 80,000 in Tanganyika, and a large but unreported number in Mozambique. They fall into five divisions: Amakale, Mwembe, Masininga, Mangoche, and Machinga. Doke classes them linguistically with the Makua rather than the Makonde, Gutherie with the Makonde rather than the Makua. Mitchell says Yao differs sharply from Lomwe, and that Nyanja is closer to Yao than to Lomwe. Much of the present Yao country has been taken over from the Nyanja. The Yao are today largely Islamized in religion.

Basic Economy

Primarily agricultural, with brand-tillage. The staple crop is maize, followed by sorghum and manioc. Also grown are finger millet (presumably Eleusine coracana), sweet potatoes, peanuts, beans and other legumes, bananas, papayas, mangoes, sugarcane, and rice (a cash crop). Hunting was once important, and fishing still is, especially on Lake Nyasa. Chickens and a few goats, sheep, and ducks are kept, but almost no cattle because of the tsetse fly.

Sex Division of Labor

Men hunt, fish, clear land, and engage to a limited extent in planting, hoeing, and harvesting, but women do the bulk of the agricultural work.

Property

A man is entitled to as much land as he can bring and keep under cultivation.

Inheritance is matrilineal--by ElSiElSo. The heir typically inherits the status and widows of the deceased as well as his property.

+ 105

Social Stratification

There are modest wealth distinctions but no true social classes among freemen. Slaves are numerous, and the Yao formerly figured prominently in the slave trade. Slaves are obtained by capture, purchase, or compensation for injury, and a MoBr could formerly sell his nephews and nieces into slavery. The children of a free man by a slave woman are free.

Marriage

Neither a bride-price nor bride-service is required, although a man commonly gives his WiMo a few small presents.

Monogamy is the norm, but polygyny is permitted--exclusively in the non-sororal form. Most plural wives are slave women or inherited (from MoBr).

Family

The normal residential unit is a matrilocal extended family (mbumba) consisting of a group of sisters with their husbands and married daughters, but it is headed by their eldest Br (or his heir) who comes to live with them.

Residence

Residence is normally matrilocal, permanently as well as initially. Avunculocal residence, however, is also common; cross-cousin marriage often results in the coincidence of avunculocal with matrilocal residence, marriage with MoBrDa being expected in an eldest son; also the heir to the headship of an extended family or of a village regularly removes to the home of his predecessor (his MoBr); furthermore, a family head or headman may require one SiSo to live with him in avunculocal residence from the age of 8 or 9.

Kin Groups and Exogamy

Local agamy is the rule, since there is likely to be a marriageable cross-cousin in even the smallest hamlet.

Perhaps the rule of residence could be called "sororilocal." Viewed along the lifeline of the individual, a man's goal is to succeed to the headship of the matrilocal extended family of his sisters or to establish himself by neolocal residence as the head of a comparable group.

105

Kindreds are clearly absent. Marriage is preferred with FaSiDa, allowed with MoBrDa, forbidden with either parallel cousin.

There are matri-sibs with totemic symbols. Though formerly exogamous, they are now agamous, and their members are widely dispersed. Sibs are divided into major matri-lineages, which are exogamous and are ranked according to the seniority of their founding ancestresses. These are divided into minor matri-lineages (mbumba), which are localized as extended families.

Distributional evidence suggests that the matrilocal form of the matrilineate is derived from an earlier avunculocal form by the extension of initial matrilocal residence to a permanent rule for all men except the heads of families.

Kinship Terminology

Fa--atati, wese. Mo--amao. Ch--mwana. ElBr (m.s.), Br (w.s.)--achimwene. Si (m.s.)-- alumbu. YoBr (m.s.), YoSi (w.s.)--mpangwa. ElSi (w.s.)--chemwali. Hu, Wi--asono.

FaBr--"big" or "little Fa." MoSi--"big" or "little Mo." MoBr --akwelume. FaSi--atati wakongwe ("female Fa"). SiCh (m.s.), BrCh (w.s.)--mwipwagao, chipwa. GrFa, GrMo--ambuje. GrCh--mwisukulu.

Cross-cousin--asiwani. Iroquois cousin terminology.

Settlement Pattern

The Yao live in settled communities, each a cluster of hamlets. Rectangular huts are usual today, but the earlier round type still survives in places.

Community Organization

Each hamlet is basically a matrilocal extended family, but in most cases new lineages have been introduced by the matrilocal marriages of the head's daughters. True clans are absent, not only for this reason but also because in marrying spouses are not truly integrated into the local descent group. Boys are circumcised at 8-12.

Local Government

Each hamlet has a headman, succession being from MoBr to

105

E1SiE1So. Such positions are coveted and prestigeful.

State

The Yao are politically integrated into small districts under petty paramount chiefs, whose authority is based on military, economic, and religious power. The district chief is himself a local headman. He is assisted by a council of senior headmen, each apparently himself the headman of a hamlet and the chief headman of the hamlets of a community. There are no ruling dynasties or hierarchical forms of chiefship.

Warfare

Intra-tribal warfare is not common and is confined mainly to slave raiding. The Yao were shattered by Ngoni raids between 1864 and 1870. Cannibalism is inferentially absent.

Bibliography

Mitchell, J.C. The Yao of Southern Nyasaland. Seven Tribes of British Central Africa, ed. E. Colson and M. Gluckman, pp. 292-353. London, 1951. (The principal source).

_____. The Yao Village. Manchester, 1956. (Adds surprisingly little).

_____. Preliminary Notes on Land Tenure and Agriculture among the Machinga Yao. Rhodes-Livingstone Journal, X, 1-13. 1950. (Not important).

Richards, A.I. Some Types of Family Structure amongst the Central Bantu. African Systems of Kinship and Marriage, ed. A.R. Radcliffe-Brown and D. Forde, pp. 207-251. London, 1950. (A good secondary survey).

Sanderson, M. Relationships among the Wayao. Journal of the Royal Anthropological Institute, L, 369-376. 1920. (Good on kinship).

Stannus, H.S. The Wayao of Nyasaland. Harvard African Studies, III, 229-272. 1922. (Useful).

Tew, M. Peoples of the Lake Nyasa Region. London, 1950. (A secondary summary).

Weule, K. Wissenschaftliche Ergebnisse meiner ethnographischen Forschungsreise in den Südosten Deutsch-Ostafrikas. Mittellungen aus den Deutschen Schutzgebieten, Ergänzungsheft I, 20-60. 1908.

1: Tew, Mary. Peoples of the Lake Nyasa Region. Ethnographic Survey of Africa, East Central Africa, Part 1, pp. 1-22. London: Published for the International African Institute by the Oxford University Press, 1950.

HRAF Copy

[The material in this source is presented by the author, a professional social anthropologist, in a succinct style, with little elaboration of detail, covering essentially all of the major aspects of Yao ethnography. Data presented relate to Yao history and foreign relations, demography, linguistics, physical environment, economic pursuits, handicrafts, agriculture, social organization and political structure, marriage, slavery, chiefs, judicial authority, religion, sorcery, initiation, birth, menstrual taboos, and burial practices. --Analyst]

Field date: No date
Analyst: John Beierle

Evaluation: Ethnologist-4
Processed in 1961

2: Mitchell, J. Clyde. The Yao Village: A Study in the Social Structure of a Nyasaland Tribe. Manchester: Manchester University Press, 1956.

Pp. xviii, 235; 9 plates; 29 tables, 7 diagrams; 2 maps; 4 appendices, bibliography, index

Yale: Nkd88. Y2. 956M

[The author, who was a Research Officer of the Rhodes-Livingstone Institute, conducted an intensive field study of the social and political structure of the Yao villages with the primary aim of making a thorough analysis of the institution of village headman in Africa. His investigations brought together a wealth of information on the origin, social status, political powers, and succession of the village headman as well as the intricate relationship between the headman and the chief. There is also information on the kinship system, family relationships, land tenure, marriage regulation, sorcery, slavery, ingroup antagonism, historical development, and the effects of cultural contacts. Much of the raw data is presented in tables, charts, and diagrams. Mitchell was Professor of African Studies at the University College of Rhodesia and Nyasaland. --Analyst]

Field date: 1946-1949 Evaluation: Ethnologist-5
Analyst: Robert Lee Processed in 1961

3: Stannus, Hugh Stannus. The Wayao of Nyasaland. Harvard African Studies, Vol. 3. Pp. 229-372. Cambridge, Mass.: The African Department of the Peabody Museum of Harvard University, 1922.

Yale: Nkd74. ~~+~~H26. v. 3

[This source was written by a physician during the several years he was stationed by the British Government at Zomba in the Shire highlands of Nyasaland. The ethnographic data recorded in this work refer therefore, primarily to the Machinga Yao of that region. Comparative references are frequently made to the Anyanja people, another group living at the southern end of Lake Nyasa, which the author studied prior to his transfer to Zomba. The work covers: division and history of the Wayao, life history of the individual, initiation ceremonies, chieftainship, crime, family relations, disease, religion, material culture, economic activities and amusements. Socialization and social organization are only lightly covered. -- Analyst.]

Field date: ca. 1912 Evaluation: Physician-5
Analyst: John Beierle Processed in 1961

4: Stannus, H. S. Notes on Some Tribes of British Central Africa. The Journal of the Royal Anthropological Institute of Great Britain and Ireland, Vol. 40, pp. 285-335. London, 1910.

Yale: Nk10 +R81 v. 40

[This article is a summary account of various aspects of the culture of some of the tribes in the Lake Nyasa region, principally the Anyanja (Maravi). Other groups included in the account are the Yao, Ngoni and Bemba. Since the author was a doctor, there is an emphasis on topics of medical interest. Also included are descriptions of puberty ceremonies, house types, boats, and other aspects of material culture. --Analyst]

Field date: ca. 1909
Analyst: Timothy J. O'Leary

Evaluation: Doctor-5
Processed in 1961

5: Mitchell, James Clyde. The Yao of Southern Nyasaland. Africa, Vol. 19, pp. 94-100. London: Oxford University Press, 1949.

Yale: Bk2.10.19

[The author has attempted to show in this brief article how the position and status of the Yao village headman is dependent upon the number of people under his authority and his ability to maintain harmonious relations between the members of the village and himself. The position of the headman, is an outgrowth of the days when the Yao were slave traders and a man's prestige and status was dependent upon the number of slaves he owned. The transition of this symbol of status to that of the headman or chief is discussed at some length in this work. In addition to the above, information is also presented on the Yao "sorority groups," chiefly duties and obligations, and changes brought about in the chief's powers through the native Administration. --Analyst]

Field date: 1946-1948
Analyst: John Beierle

Evaluation: Ethnologist-5
Processed in 1961

6: Mitchell, James Clyde. An Estimate of Fertility in Some Yao Hamlets in Liwonde District of Southern Nyasaland. Africa, Vol. 19, pp. 293-308. London: International African Institute, 1949.

Yale: Bk2.10.19

[This study is devoted almost entirely to problems, and methods in obtaining a reasonably accurate estimate of fertility in three Yao hamlets. The major portion of the work is devoted to birth statistics (twelve tables). In addition there are incidental data pertinent to marriage and divorce, history, childbirth, and ideas about conception and sterility.

In summary the author concludes that "...the average gross reproduction-rate within the sample over the last ten years was about 2.9 while the net reproduction-rate was about 2.2."--Analyst]

Field date: 1946-1947
Analyst: John Beierle

Evaluation: Ethnologist-5
Processed in 1961

7: Hetherwick, Alexander. Some Animistic Beliefs Among the Yaos of British Central Africa. Journal of the Anthropological Institute of Great Britain and Ireland, Vol. 32, pp. 89-95. London, 1902.

Yale: NK10-R81 v. 32

[This source deals with Yao religious beliefs. The author describes their ideas about the soul and life after death, ancestor worship and propitiation of dead chiefs, and their notions of the spirit forces responsible for creation. The author, a missionary was stationed in this area. --Analyst]

Field date: ca. 1900
Analyst: Betty Potash

Evaluation: Missionary-5
Processed in 1961

8: Mitchell, James Clyde. The Political Organization of the Yao of Southern Nyasaland. African Studies, Vol. 8, pp. 141-159. Johannesburg: Witwatersrand University Press, 1949.

Yale: Nkd74. Af7. v. 8-9

[This source deals with the political organization among the Yao as it existed primarily under British Colonial administration. Emphasis is placed on the position of the chief in the society and the interaction between him and the native administration's political bureaucracy. The author, a professional ethnologist, gives first the cultural background of the Yao, then shows how the political structure of the society was organized prior to the coming of the Whites. This information was obtained by the author from the reports of early visitors to the area before European influence was strongly felt, and also from native informants. A discussion of the first entry of the Whites into the area and their eventual conquest of the Yao, is followed by an analysis of the present position of the Yao political

8: Mitchell, James Clyde.

system. A general summary concludes the work. --Analyst]

Field date: 1946-1947
Analyst: John Beierle

Evaluation: Ethnologist-5
Processed in 1961

9: Lawson, Audrey. An Outline of the Relationship Systems of the Nyanja and Yao Tribes in South Nyasaland. African Studies, Vol. 8, pp. 180-190. Johannesburg: Witwatersrand University Press, 1949.

Yale: Nkd74. Af7. v. 8-9

[This study, deals almost exclusively with kin relationships within the Nyanja society, (e.g., a man and his wife, grandparents and grandchildren, cousins, and siblings, both biological and classificatory), and the various kinship terms applied to these "relatives." Incidental data given in the opening pages pertain to the population of the Shiré Highlands, general differences and similarities between the Yao and Nyanja people, and some of the changes that have been brought about in each of the societies through European contacts. A brief comparative analysis of the Nyanja and Yao kinship systems, especially in regard to what the author terms matrilineal "clans," summarizes the content of this study and may be found on page 190 (A & B). --Analyst]

Field date: ca. 1940 Evaluation: Educator-5

Analyst: John Beierle Processed in 1961

10: Sanderson, Meredith. A Note on Ceremonial Purification Among the WaYao, Nyasaland. Man, Vol. 22, pp. 91-93. London: The Royal Anthropological Institute, 1922.

Yale: Nk10. M31. v. 22-23

[This brief article describes several ceremonies of the Yao, in particular those occurring at the beginning of the twelfth month (lunar), called the pyajila, and those of a purificatory nature associated with death, threatened epidemics of infectious diseases, and murder (especially by shooting). The author notes that these ceremonies are now rarely performed collectively. -- Analyst]

Field date: ca. 1920
Analyst: John Beierle

Evaluation: Physician-5
Processed in 1961

11: Sanderson, Meredith. Relationships among the Wayao. Journal of the Royal Anthropological Institute of Great Britain and Ireland, Vol. 50, pp. 369-376. London, 1920.

Yale: Nk10 +R81 v. 50

[This is a summary article consisting mainly of a table containing the kinship terminology of the Yao, together with a short section explaining the table. The author was a medical officer attached to the Nyasaland Protectorate. --Analyst]

Field date: ca. 1920
Analyst: Timothy J. O'Leary

Evaluation: Doctor-5
Processed in 1961

2: Mitchell E-5 (1946-1949) 1956 FT7 Yao FT7

BIBLIOGRAPHY

A. WORKS OF DIRECT BEARING ON THE YAO OF NYASALAND

113 *Annual Colonial Report, No. 472, British Central African Protectorate, 1904-5.*

Census Report for Nyasaland, 1945, Government Printer (Zomba, 1946).

Correspondence re operations against Slave Traders in British Central Africa, London, H.M.S.O., C. 7925 and 8013 (1896).

Report of the Consul and Acting Commissioner Sharpe on the Trade and General Condition of the British Central African Protectorate for April 1896 to March 31st, 1897. Accounts and Papers. (Africa) No. 5 (1897), C. 8458.

ABDALLAH, YOHANNAH B., *Chikale cha Wayao*, edited and translated by Sanderson, M., as *The History of the Yao*, Government Printer (Zomba, 1919).

ABRAHAM, J. C., *Census Report for Nyasaland, 1931*, Government Printer (Zomba, 1932).

BUCHANAN, J., *The Shire Highlands*, Blackwoods (London, 1885).

BURTON, Sir R. F., *The Lands of Cazembe: Lacerda's Journey to Cazembe in 1798*, translated and annotated by J. Murray (London, 1873).

CARDEW, C. A., 'Nyasaland in 1894-5', *The Nyasaland Journal*, i, 1 (Jan. 1948), 51-5.

DUFF, H. L., *Nyasaland under the Foreign Office*, George Bell (London, 1903).

GARBUTT, H. E., 'Witchcraft in Nyasa (Mangaja, Yao (Achawa)), communicated to the Writer', *J.R.A.I.*, li (1921), 361-4.

'Native Customs in Nyasa and the Yao', *Man*, xii (1912), 20.

HETHERWICK, A., *A Handbook of the Yao Language*, S.P.C.K. (London, 1922).

Note on Yao in *Nyasa News* (Nov., 1893), 64.

'Some Animistic Beliefs among the Yaos', *J.R.A.I.*, xxxii (1902), 89-95.

'Islam and Christianity in Nyasaland', *Moslem World*, xvii, 2 (April 1927).

HYNDE, R. S., 'Among the Machinga People', *The Scottish Geographical Magazine*, Edinburgh, viii (1891), 656-63.

'Marriage and relationship among the Yaos', *Nyasa News*, vii (1893), 217-218.

JOHNSON, W. P., 'Discovery of the Source of the Lujenda', *Proc. Roy. Geog. Soc.*, viii (Aug. 1882), 480-4.

'Seven Years of Travel in the region East of Lake Nyasa', *Proc. Roy. Geog. Soc.*, viii (Aug. 1884), 313-36.

'The Yaos: a defence and a Suggestion', *Nyasa News*, ii (1893), 55-8.

'More about the Yaos', *Nyasa News*, iii (1894), 77-80.

Nyasa, the Great Water, Oxford University Press (London, 1922).

JOHNSTON, H. H., *British Central Africa*, Methuen (London, 1897).

LAWS, R., *Reminiscences of Livingstonia*, Oliver & Boyd (Edinburgh, 1934).

LAWSON, A., 'An Outline of the Relationship System of the Nyanja and Yao Tribes in South Nyasaland', *African Studies*, viii, 4 (Dec. 1949), 180-90.

2: Mitchell E-5 (1946-1949) 1956 FT7 Yao FT7

LIVINGSTONE, D. and C., *Narrative of an Expedition to the Zambezi and its Tributaries, and of the Discovery of Lakes Shirwa and Nyassa, 1858-64*, John Murray (London, 1865). 113

MACDONALD, DUFF, *Africana or the Heart of Heathen Africa* (2 vols.), Simpkin Marshall & Co. (London, 1882).

MAPUS, C., 'Minoyo', *Nyasa News*, i (Aug. 1893), 192-6.
'Unango', *Nyasa News*, ii (Nov. 1893).

MITCHELL, J. C. (with GLUCKMAN, M., and BARNES, J.A.), 'The Village Headman in British Central Africa', *Africa*, xix, 2 (April 1949), 89-106.
'The Political Organization of the Yao of Southern Nyasaland', *African Studies*, viii, 3 (Sept. 1949), 141-59.
'An Estimate of Fertility in Some Yao Hamlets in Liwonde District of Southern Nyasaland', *Africa*, xix, 4 (Oct. 1949), 293-308.
'Preliminary Notes on Land Tenure and Agriculture among the Machinga Yao', *Human Problems*, 2 (1950), 1-13.
'The Yao of Southern Nyasaland', in Colson, E., and Gluckman, M. (eds.), *Seven Tribes of British Central Africa*, Oxford University Press for the Rhodes-Livingstone Institute (London, 1951), 292-353.
'An Outline of the Social Structure of Malemia Area', *The Nyasaland Journal*, iv, 2 (July 1951), 15-48.
'A Note on the African Conception of Causality', *The Nyasaland Journal*, v, 2 (July 1952), 51-8.
Marriage among the Machinga Yao (forthcoming).

MOGGRIDGE, L. T., 'The Nyasaland Tribes, their Customs, and their Poison Ordeal', *J.R.A.I.*, xxxii (1902), 267-72.

MURRAY, S. S. (compiler), *A Handbook of Nyasaland*, Government Printer (Zomba, 1932).

M. T. K., 'The Yaos in the Shire Highlands', *Nyasa News*, iv (1894), 121-5.

O'NEILL, H. E., 'Journal from Mozambique to Lakes Shirwa and Amaramba', *Proc. Roy. Geog. Soc.* (1883-4).
The Mozambique and Nyasa Slave Trade (1885).

ROWLEY, H., *The Story of the Universities Mission to Central Africa from its Commencement under Bishop Mackenzie, to its withdrawal from the Zambezi*, Sampson Oxley & Co. (London, 1886).
Twenty Years in Central Africa, Wells Gardner, Darton & Co. (London, 1889).

SANTHERON, M., *A Yao Grammar*, S.P.C.K. (London, 1922).
'A Note on the Ceremonial Purification of the Yao', *Man*, xxii (1922), 55.
'The Relationship system among the Yao', *J.R.A.I.*, l (1920), 369-76.

SCLATER, B. L., 'Rivers and Districts in Southern Nyasaland', *Geographical Journal*, ii (Nov. 1893), 403-23.

STANNUS, H. S., 'The Wayao of Nyasaland', *Harvard African Studies* (1922), Varia Africana, iii, 229-372.
'Notes on some Tribes of British Central Africa', *J.R.A.I.*, xl (1910), 283-333.

2: Mitchell E-5 (1946-1949) 1956 FT7 Yao FT7

113 STANNUS, H. S., and DAVEY, J. B., 'Initiation Ceremony for Boys among the Yao of Nyasaland', *J.R.A.I.*, xlii (1913), 119-23.

THOMPSON, J., 'Notes on the Basin of the River Rovuma, East Africa', *Proc. Roy. Geog. Soc.*, ii (Feb. 1882), 65-79.

WALLER, H., *The Last Journals of David Livingstone in Central Africa from 1865 to his Death*, John Murray (London, 1874).

YOUNG, E. D., *Nyassa, a Journal of Adventure*, John Murray (London, 1877).

B. OTHER WORKS CITED

BARNES, J. A., 'The Fort Jameson Ngoni', in Colson, E., and Gluckman, M. (eds.), *Seven Tribes of British Central Africa*, Oxford University Press for the Rhodes-Livingstone Institute (London, 1951).

Politics in a Changing Society, Oxford University Press for the Rhodes-Livingstone Institute (Cape Town, 1954).

CUNNISON, I., *Kinship and Local Organization on the Luapula*, Communication from the Rhodes-Livingstone Institute, No. 5 (Livingstone, 1950).

DIXEY, F., 'The Distribution of the Population of Nyasaland', *Geographical Review*, xviii (April 1928), 274-90.

EVANS-PRITCHARD, E. E., *Witchcraft, Oracles and Magic among the Azande*, Clarendon Press (Oxford, 1937).

The Nuer, Clarendon Press (Oxford, 1940).

Some Aspects of Marriage and the Family among the Nuer, Rhodes-Livingstone Paper No. 11 (Livingstone, 1945).

FORTES, M., *The Dynamics of Clanship among the Tallensi*, Oxford University Press for the International African Institute (London, 1945).

The Web of Kinship among the Tallensi, Oxford University Press for the International African Institute (London, 1949).

GLUCKMAN, M., 'The Kingdom of the Zulu of South Africa', in Fortes, M., and Evans-Pritchard, E. E. (eds.), *African Political Systems*, Oxford University Press for the International African Institute (London, 1940).

The Economy of the Central Barotse Plain, Rhodes-Livingstone Paper No. 7 (Livingstone, 1941).

Essays on Lozi Land and Royal Property, Rhodes-Livingstone Paper No. 10 (Livingstone, 1943).

'Kinship and Marriage among the Lozi of Northern Rhodesia and the Zulu of Natal', in Radcliffe-Brown, A. R., and Forde, C. Daryll (eds.), *African Systems of Kinship and Marriage*, Oxford University Press for the International African Institute (London, 1950).

'The Lozi of Barotseland', in Colson, E., and Gluckman, M. (eds.), *Seven Tribes of British Central Africa*, Oxford University Press for the Rhodes-Livingstone Institute (London, 1951).

'Succession and Civil War among the Bemba—An Exercise in Anthropological Theory', *Human Problems in British Central Africa*, xvi (1954), 6-25.

HECHSER, W., 'Islam in Africa', in Arberry, A. J., and Landau, R., *Islam To-day* (London, 1943).

2: Mitchell E-5 (1946-1949) 1956 FT7 Yao FT7

KENYA, H., *An African Aristocracy*, Oxford University Press for the International African Institute (London, 1947). 113

PIM, A., *An Economic History of Tropical Africa*, Oxford University Press (London, 1940).

RICHARDS, A. I., 'Mother-right among the Central Bantu', in Evans-Pritchard, E. E., and others, *Essays Presented to C. G. Seligman*, Kegan Paul (London, 1933).

'The Political System of the Bemba Tribe—North-eastern Rhodesia', in Fortes, M., and Evans-Pritchard, E. E. (eds.), *African Political Systems*, Oxford University Press for the International African Institute (London, 1940).

'Some Types of Family Structure among the Central Bantu', in Radcliffe-Brown, A. R., and Forde, C. Daryll (eds.), *African Systems of Kinship and Marriage*, Oxford University Press for the International African Institute (London, 1950).

SMITH, E. W., and DALE, A., *The Ila-Speaking Peoples of Northern Rhodesia*, Macmillan (London, 1920).

WILSON, G., 'An Introduction to Nyakyusa Society', *Bantu Studies*, x, 3 (1936), 253–91.

WILSON, M., *Good Company: A Study of Nyakyusa Age-villages*, Oxford University Press for the International African Institute (London, 1951).

Table V shows that the age-distribution for the Yao sample is very similar to certain other populations commonly held to have high birth-rates. There appears to be some correlation between the proportion of youth in a population and the gross

128
162
163
171

TABLE V. *Sundbarg's Age Division*

Population	Year	Youth 0-15	Middle age 15-40	Old age over 40	G.R.R.
Yao*	1946	474	456	100	..
Yao with abortions	1946	474	474	100	..
Bhadauri†	1940	464	477	97	..
Bhangiya	1940	459	477	96	..
Chamarh	1940	454	469	97	..
Delhi	1941	399	396	97	..
Japan	1935	389	479	133	2·151
Belgium	1934	324	480	135	1·70
Czechoslovakia	1930	363	513	135	1·68
New Zealand	1936	313	517	170	1·74
Denmark	1940	249	541	210	1·08
Sweden	1940	204	548	248	0·89

* There were 25 in the sample whose ages were not known. These were all adults and have been included proportionately in the two adult groups.

† All data for other populations taken from *The League of Nations Statistical Yearbook 1939/40*.

‡ Interpolated between 1930 (0·95) and 1937 (0·145).

reproduction-rate. Judging from the material presented in Table V a high gross reproduction-rate may be expected among the Yao where the proportion of youth is much higher than in the case of those whose gross reproduction-rates are quoted.

(3) *The Proportion of Children under 5 to Women 15–50*

Fertility may be judged more accurately than by this trickery by considering the proportion of children under 5 to the total number of women between the ages of 15 to 50, i.e. the fertility ratio.[1] In the whole sample there were 147 children under 5 and 191 women between the ages of 15 to 50. This is a ratio of 766 children per 1,000 women. However, women who are going away from the area for a long time, as, for example, wives of men who are going with their husbands to some labour centre, possibly in South Africa or Southern Rhodesia, usually leave their weaned children with their matrilineal relatives. This means that the ratio quoted (766 per 1,000) is, in reality, an over-estimate of the true ratio. In order to arrive at a nearer estimate of the ratio we must consider the children actually born to women in the sample. Table VI classifies all children both dead and surviving born to women between the ages 15 to 35. From this table we adduce that there were 191 women between the ages 15 to 50 (for whom details were available), and among them they had 141 surviving children under the age of 5. This is a fertility ratio of 738 per 1,000 women. Table VII shows the fertility ratio for 18 countries with their gross reproduction-rate for the same period as the fertility ratio.

128
162
163

* It is more usual to take the number of women between 15 and 44, though recently the age-group between 20 and 44 has been used. I have taken the age-limits 15 to 50 because of the early age of marriage, and because it appeared that the average age of cessation of child-bearing is about 50 from Table VIII. For a discussion of the reliability of this measure of fertility when birth registration is not practised, see T. Lynn Smith, *Population Analysis*, McGraw Hill Book Co., New York (1948), p. 136.

B.Mitchell E-5 (1946-1947) 1949
[P 159C]
FT? Yao FT?

BIBLIOGRAPHY

113 1. DUFF MACDONALD, *Africana or The Heart of Heathen Africa*, (London: Simpkins, 1882). 2 volumes.
2. M. FORTES and E. E. EVANS-PRITCHARD, *African Political Systems*, (London: Oxford University Press, 1940).
3. S. S. MURRAY, *Handbook of Nyasaland*, (London: Crown Agents 1932).

Z: Mitchell E-5 (1946-1949) 1956 FT7 Yao FT7

PREFACE

THIS book is the fruits of field work from September 1946 to September 1947, and from September 1948 to June 1949, as a Research Officer of the Rhodes-Livingstone Institute, among the Yao of Southern Nyasaland. Between June and September 1949 I was employed by the Nyasaland Government on a survey of the Domasi District where a Development Scheme was to be inaugurated. The detailed results of the Domasi survey have already been published separately,[1] and the general results have been incorporated here by permission of the Nyasaland Government.

By the very nature of his work a sociologist must depend heavily on others for help. As with all sociologists my greatest indebtedness is to the people amongst whom I worked. Here I must mention in particular Chiefs Kawinga and Chiwalo, and Village Headmen Cigwaja and Kapaloma, whose hospitality in one way and another helped me appreciably. I also thank Rajabu Kumpulula, who was my clerk and main informant during the second field trip.

I am grateful to the Nyasaland Government for assistance in many ways, and to several officers of the Administration for their kindness and hospitality to me. In particular, Mr. E. C. Barnes, then Provincial Commissioner in Blantyre, encouraged me by his interest in my research. Mr. Martin Lewis and Mr. R. P. Errington, successive District Commissioners at Zomba, by their sympathetic understanding of the rôle of an anthropologist, and their hospitality in Zomba and Blantyre, did much to make field work less of a burden than it might have been. The hospitality of Mr. Richard Leach and Mr. H. Gardner, then of the Agricultural Department, and of Mr. E. Hemmings of the Native Tobacco Board, also eased the discomforts of field life.

To my teachers and colleagues I owe a special word of thanks. I would like to acknowledge here my debt to two of my teachers at the Natal University College who, during my undergraduate

[1] 'An Outline of the Social Structure of Malemia Area', *The Nyasaland Journal*, iv, 2 (July 1951), 15-48.

2: Mitchell E-5 (1946-1949) 1956 FT7 Yao FT7

men into a public meeting and each answered the questions personally. Where the information was not known, I made special enquiries to obtain it. Later I transferred this information on to small cards which I subsequently used in the statistical analysis. During my survey of Malemia chiefdom I was able to employ six African clerks whom I trained to record genealogies. They surveyed a 20 per cent random sample of villages in the chiefdom. The material from these genealogies has been transferred to Hollerith cards for statistical analysis at some future date. During this period, Mr. Carrall Wilcocks, who was then Agricultural Instructor at the Jeanes' School, and I were able to make a map with chain and compass of every garden cultivated by members of a large village. While the general results of this study have been included here, a detailed analysis is still to be made. 124 126

The material used in the chapters which deal with the pre-White times has been derived mainly from the published works quoted in the Bibliography. I was also able to consult records in the Central African Archives. By permission of the Nyasaland Government I was allowed to read through the District Books at Fort Johnston and Zomba, and through some of the files which contained information collected by early District Officers. I was also able to consult the detailed returns of the 1945 Census at the District Commissioner's office in Zomba. The Agricultural Officer at Fort Johnston, under whose jurisdiction the area where I was working fell, was kind enough to let me read some reports and to give me statistics of sales of tobacco and other agricultural produce at the Government-controlled markets, as well as details of rainfall and temperature. 127

The ideas in this book have been developed in a number of Rhodes-Livingstone Institute staff conferences and at seminars at Oxford. During a preliminary period of writing at Oxford between September 1947 and August 1948 I prepared the manuscript of what was later to become my contribution to the symposium *Seven Tribes of British Central Africa*. I cannot overemphasize the importance of this essay in setting the problems examined in this book and in clarifying my approach to them. It brought home to me more than anything else the truth in the aphorism: the hardest part of field work is writing it up. 114

3:Stannus D-5 (ca. 1912) 1922 FT7 Yao FT7

THE WAYAO OF NYASALAND

HUGH STANNUS STANNUS M.D., M.R.C.P. (Lond.), M.R.C.S. (Eng.), F.R.A.I.

In the *Journal of the Royal Anthropological Institute* for 1910,[1] there appeared under the title of 'Notes on some tribes of British Central Africa,' observations made by me on natives around the southern end of Lake Nyasa. These notes referred largely to the Angonde people. Since then I have been stationed for several years at Bandwe in the Shiré highlands of Nyasaland (late British Central Africa) and the present paper relates to the native peoples living in that vicinity, Mashinga Yao. Many analogies in the customs of these two tribes will become obvious on comparing the present paper with that referring to the Angonde. It seems probable that most of these customs have a common origin and have evolved along similar lines, though in some instances, there is evidence that one tribe has adopted a custom from the other. The problem in many cases is very difficult to solve but where any evidence of value on such points is forthcoming, it is mentioned. 114

I wish to acknowledge my indebtedness for help in the preparation of this article to Dr. Meridith O. Sanderson for his assistance in etymology and for the rendering of many Chiyao words, to Mr. E. F. Colvile for aid in making corrections, and to Thomas Chenuga, a native hospital assistant, for invaluable help in getting to the bottom of many customs. The very beautiful photograph of the *Ching' ungong'* unyago dancer (Pl. I) was taken by Dr. J. B. Davey of the East African Medical Service and is with his kind permission here reproduced.

Introduction. Concerning the ethnology of the peoples of Nyasaland, little has been written. Officials have, for the most part, been uncommunicative, and the large body of missionaries has taken slight advantage of the unique opportunities for study which early occupation of the country and close connection with its people offered them. In the case of the Yao, however, there are two brilliant exceptions, the Reverend Duff Macdonald[2] whose *Africana* remains an authoritative exposition of the customs of the Yao around Blantyre, and the Reverend Dr. Hetherwick,[3] author of the standard work on Yao linguistics.[4] Apart from these, some information can be gleaned from Livingstone's[5] account of his travels, from the writings of Sir H. H. Johnston,[6] and the Hon. H. L. Duff,[7,8] and from Miss Werner's[9] popular book written after a short stay in the Protectorate. Other references to the Wayao are too scanty to be of value.

For information concerning the Wayao of German East Africa, the reader is referred to Dr. Fülleborn,[10] and to the published results of an ethnological research expedition to the

[1] H. S. Stannus, 'Notes on some tribes of British Central Africa,' (Journ. Anth. Inst., vol. 40, 1910, p. 265–336).

[2] Duff Macdonald, Africana or the heart of heathen Africa, London, 1882.

[3] Alexander Hetherwick, A handbook of the Yao language, London, 1902.

[4] Since these notes were made in 1912–1913, Dr. M. O. Sanderson has published a Yao grammar and intends shortly to follow it with a Chiyao dictionary.

[5] David Livingstone, Narrative of an expedition to the Zambesi and its tributaries and of the discoveries of the lakes Shirwa and Nyasa, 1858–1864, London, 1865.

[6] H. H. Johnston, British Central Africa, London, 1897.

[7] H. L. Duff, Nyasaland under the foreign office, London, 1903.

[8] Now Sir Hector Duff, K. B. E., C. M. G.

[9] A. Werner, The natives of British Central Africa, London, 1906.

[10] F. Fülleborn, Das deutsche Nyasa-und-Rovuma-Gebiet, Land und Leute, nebst Bemerkungen über die Bahinsader, Berlin, 1906.

3: Stannus D-5 (ca. 1912) 1922 FT7 Yao FT7

114 southern part of that territory by Dr. Karl Weule. I have not had access to Weule's official reports but judging from Miss Werner's translation of his popular edition,[1] the book shows a good deal of evidence of inaccurate information, or perhaps it would be better to say, evidence of want of extensive observation, and all the strictures which his translator passes upon the book[2] are well deserved. I am inclined to think that much of what Weule describes in connection with various tribes including the Wayao bears witness to considerable modification by intermixture, and it may be interesting to compare his account of Yao customs with my own.

Duff Macdonald,[3] then, remains the one author whose writings are of value to the student of the Wayao of Nyasaland, and one cannot help feeling that the ethnological character of his book suffers from the attitude which he, in common with most missionaries, takes in regard to many native customs. I believe that if missionaries, instead of turning away their faces in horror, had regarded these practices with an open mind, they would have found that their veiled statements were exaggerations of the truth, and that the old social code of the Yao native would compare favorably with the order of things in most civilised countries.

Morals are after all only the laws that regulate the social welfare of a community and there can be no theoretically perfect code of morals which does not take into consideration the living conditions of the community to which it is applied. Before the ties of custom which bound their social system were cut by European government and missionary influence, I think the natives of Nyasaland sinned against their code of morals comparatively seldom. The present time is one of transition. Freed from old customs and beliefs, and with nothing of equal strength to take their place, the younger generation of natives has suffered and only time with just rule and efficient education can raise them to the higher moral standard which European influence strives to impose upon them.

The old order is passing rapidly and I therefore make no apologies for recording my observations, since the time will soon come when the things I speak of will be entirely forgotten. I find I have gone over much of the ground covered by Macdonald, but in most cases, I believe that I can add many details which may be of value to ethnologists.

101 **Divisions and History of the Wayao.** In regard to the question of tribal names, I think it is perhaps better to reserve the word *Wayao* to denote the whole Yao family and give to each section of the tribe the designation by which it is known to all its members. Thus the name Amangoche should be applied to the Yao people settled around Blantyre, while the Yao about whom I shall speak belong to that branch of the tribe known as Amachinga, now living near Zomba under their chief, Malemya. These two sections, together with a third, to the north, the Amasinings, contain all the Yao of Nyasaland. (Pl. IX)

[1] Karl Weule, Native Life in East Africa, tr. by Alice Werner, London, 1909.
[2] Ibid., p. xiii–xiv.
[3] Op. cit.

3: Stannus D-5 (ca. 1912) 1922 FT7 Yao FT7

That these several sections of the Wayao differ in many respects may be seen by comparing the Amangoche of *Africana*[1] with the Amachinga of this article. I am not sufficiently conversant with the Amangoche to make a definite statement on this point but I am inclined to believe that after longer residence and wider knowledge, Macdonald would have found that some of his statements needed revision. Those whom he considered the "Yao proper" but whom I prefer to speak of as the Amangoche seem to have a considerable mixture of Anyanja, since their language contains many Chinyanja words and many of their customs are practically those of the Anyanja. I am of the opinion that the Amachinga may be regarded as more typical of the Wayao, and except when ambiguity might arise, I shall speak of them as the Yao.

The original home of this Bantu speaking people is uncertain; in historic times all the sections of the Wayao were originally grouped in that part of Portuguese East Africa around the hill called Chao, whence they probably derived their name, *Wa Chao* or *Wa Yao*. About the middle of the nineteenth century, as the result of inroads by neighboring tribes of Alolo from the southeast, and raids by the Makwangala, a branch of the Angoni of Zulu origin, from the northwest, disruption of the Yao people occurred, and the divisions mentioned above, moved toward Nyasaland. The Masaninga branch settled for the most part along the eastern shore of Lake Nyasa but a sub-section known as Tambala Yao reached the west side of the lake. The Machinga made a settlement near Lake Chiuta under a number of old chiefs, including Malemya (Nalutumbo), Kawinga, Chenkula, Kalimbuka, and Maole.

The descents of the Makwangwala again caused the Wayao to move on from Chiuta to Naminga on the Mikoko stream. Here Malemya suffered another defeat at the hands of the Angoni; many of his people were driven off and taken to the neighboring Anguru country where they were held in captivity for some time. Finally they were restored by the enterprise of one of Malemya's old men, Kulungala, who went alone to the Angoni, saying that he wished to live with them and with his own brethren. One day, he asked the Angoni if they would like to see their captives dance, and when they assented, he called the Yao together, and clapping his hands to keep time, he began to sing one of their dance songs. Gradually he gathered all the Yao into the village open space, dancing and singing; then, keeping to the same air, he told them why he had come, using their own language which the Angoni did not understand. "Malemya, our chief, remains at the Mikoko stream. It is not far off. We must all join him again. Now dance for joy. If anyone does not return there, it is his own fault." Then, a few at a time, the dancers left the crowd and stole away into the bush and, as night came on, they all made off and reached Malemya's camp in safety.

Malemya's people were again attacked by the Angoni, and on this occasion they defeated their enemies. The Angoni retreated and skirting Zomba mountain, reached the Shiré

[1] Macdonald, op. cit.

3:Stannus D-5 (ca. 1912) 1922 FT7 Yao FT7

or a girl who has just returned from *Chipute* must not touch the child, as it is said, "Her body is hot and would give fever to the child." To guard against such a happening, some "clean" woman, after handing some beads to the mother, will ask to be allowed to take the infant. This indicates that should it sicken, the beads will pay the medicine-woman who comes to cure it. The mother and baby are simply washed in water and are not treated with medicine, unless meconium has been voided before the child was delivered.[1] If the infant dies before it is presented to the outside world, it is disposed of in the same way as a stillborn child, i.e. buried in the ash-heap. About the tenth day, the baby is adorned with a girdle of beads and two little pieces of stick obtained from a medicine-woman to make the infant grow fat. 846 [845 766] [856]

The length of time during which the father and mother refrain from cohabitation after the birth of a baby varies greatly according to circumstance. Four months is probably a minimum, while two years, during which the woman suckles the child, is the common interval. After the first coitus, the man and woman wash themselves and the baby is bathed in the same water to prevent any ill coming to it. 833

Suckling often continues much longer than two years. If the mother dies, the child may be suckled by the grandmother, an aunt, or some other woman, but the breasts must first be treated with medicine or the child would die 853

A child born breech first is called *selanga*, a word which is also used to denote a variety of domestic fowl which always has the appearance of having its feathers ruffled. A child who dies before the father and mother have resumed sexual relations is buried in a graveyard apart from that of adults. The graves, dug with sticks, not hoes, is very shallow, and when it is filled in, a heap of stones is made above it. Only women attend the burial. A deep grave would cause the mother to go on losing children at an early age. The body of such a child is called *hiuwa*, "hyaena." 845 766

A woman dying undelivered is placed in the grave in the usual way and then, before filling in the earth, one of the grave-diggers descends into the pit, cuts through the enveloping shroud, and incises the abdomen. One end of a long bamboo stick or reed is inserted in the incision and the other end is brought out to the surface of the grave. If this were not done, "many would die in childbirth." 844 766

Twins are not killed by the Yao but are well treated and always cared for equally. They are given similar clothing and food.[2] There is a story that the mother of Nkwamba, 845

[1] Chiquro, vide infra, p. 266.

[2] 'T. A. Warner, 'Among the Congo Cannibals, by John H. Weeks, London, 1913, a review,' (Man, vol. 14, no. 58, 1914, p. 101.

I take this opportunity of referring to Miss Warner's review in which, speaking of twins, she says, "They are always among the Anyanja given the names *Mapili* and *Nyama*." *Mapili* in Chinyanja refers to a kind of musical instrument and the Chipeto meaning is "measured pains." *Nyama* is a Chipeto word which certainly means "the beak." It is sometimes used of the second born twin but does not occur in Chinyanja. I have never heard of twins either among the Wayao or the Anyanja spoken of by these names. A mother carries the first born on the right arm and the second born on the left, but, so far as I know, she does not give a duplicate greeting nor make a habit of eating equally with both hands. [114]

3: Stanzus D-5 (ca. 1912) 1922 FT7 Yao FT7

765 to fire off his gun as long as his powder lasted. During the period of mourning, drumming
[534] went on continuously, *chindimba* being played on the three small drums called *tchowa*.

With the exception of the flexed attitude of the body, the foregoing description is a correct account of what happens today. The body is now fully extended.

767 The *awile* are two or four in number, although other friends may assist in all their ser-
764 vices. On about the third day, the *awile* sew up the body in bark cloth, completely envelop-
ing it; a bamboo needle is used and left sticking in the cloth at the last stitch. The body is then enclosed in a mat slung on a pole, and carried from the hut to the grave. First, the procession makes a round of the village, passing by all the houses which the dead man used to visit, and over all the paths he used to cross. His children and those of his relatives under seven or eight years old gather in the village, and throw pieces of charcoal toward the body as it passes, "so that they shall forget the dead man," or run after the corpse, while some one sprinkles medicine over them.

764 As the procession leaves the village, it is headed by the drums playing *chindimba*, but
after a few hundred yards, only the *ching'anga* drum, now called *chitanda*, beats time for a
[534] short distance; the procession then goes on quietly. Following the drums, walks the mother or another relative carrying flour with which the grave will be marked out. Behind this mourner, the body is borne by the *awile*. The *awile* are always the first to carry the body, but are later relieved by other friends of the deceased; no one would ever ask to be relieved.
[114] After the chief mourner, follow the other relatives and friends, the men first, the women behind. Boys just back from their *unyago* attend to learn the customs. All the relatives of the deceased go to the burial, contrary to Macdonald's account.[1]

In this order, the procession reaches some tree thirty or forty yards from the place of burial where the corpse is put down in the shade, *situla*, "resting place", and while the women and part of the men watch beside it, the *awile* proceed to the burial place. They cut branches from a sacred tree, and strew them on the path. On approaching the appointed spot, they clap their hands in salutation, asking that the burial ground be opened to them.

The head *mbile* chooses the site where the grave shall be dug, after which the mourner marks out the limits with the flour she has brought. In the days when the body was buried in contracted posture, a circular grave was dug just big enough to allow two men to work in it. Eight feet was the usual depth but this was decided by the deceased's *nyanu*, if he were living, otherwise, by his near relatives. In the east side of this circular well, a cave was excavated, just large enough to admit the contracted corpse. When all was prepared, the body accompanied by all the mourners, was brought from *situla* to the graveside. The chief *mbile* with a friend of the man's family and one of his wife's, standing in the grave received the body and placed it in the cave, resting on a mat and covered with bark cloth. The body lay on its side with its back toward the well, and its face looking

[1] Op. cit., vol. 1, p. 105.

3:Stannus D-5 (ca.1912) 1922 FT7 Yao FT7

toward the east. After adjusting the body in its place, the *ubile* would tear open the shroud over the ear, and pour on to the plana some powdered beads to be used by the dead man as money in the hereafter. Except in the case of chiefs, no objects were buried with the dead, contrary to Macdonald's description[1] of the Amangoche. The pole on which the body had been carried to the grave was broken into bits and together with any stick that had been used to measure the body for the cave, was placed in the grave. The opening into the chamber was then closed by a mat fastened over it by pegs and supported by pieces of wood. The *ubile* clambering out of the well, pushed the first earth backward into the grave with their elbows, after which the rest of the earth was shovelled in quickly, and a heap made at the surface. The ground about this mound was swept clean with a bunch of leaves by some one walking backward so that no footprints were left; the bunch of leaves was thrown on top of the mound. No medicine was put in the grave, nor were the household utensils placed on the mound, as Macdonald states concerning the Amangoche.[2]

764 [114] [114]

For some years past, the type of grave made among the Yao has resembled that of the Anyanja,[3] a long pit with a chamber scooped out along the whole length of one side. In this, the corpse is placed in a fully extended position so that it lies on its back with the feet toward the east. With this exception, the account given above holds good for the present day. The method of suspending the corpse in a mat slung on forked sticks within the grave, mentioned in *Africana*,[4] is not found among the Amachinga Yao.

On the way back to the village, two *ubile* lead, followed by the men, the women, and lastly, by the other *ubile*. First, all wash, the men upstream, the women downstream; no one may wash another's back. The hoes used in digging the grave are also washed; hoes are never washed on any other occasion.

764 783

During the funeral, some responsible old man is left in charge of the village with several younger men to assist him. Just before the return of the funeral party is expected, the old man sends one of the younger men to set medicine at the side of the path along which the mourners will pass. This medicine is made from the bark of the *mpingo* tree and is used for purification; it is placed in a sherd. Each person as he arrives at the spot squats down, dips the little finger of each hand into the medicine, and passes the fingers between the little toe and the third toe of the corresponding foot. The last comer throws any remaining medicine into the bush. As they near the village, a gun is fired and wailing is resumed for a few minutes, after which it ceases altogether. The old man who has been left in charge of the village always inquires whether all has gone well at the interment.

[824]

That evening, the time is passed in singing *chindimba*.[5] All those who attended the burial, sleep in the village, and if the deceased's relatives can afford to provide the necessary food, all remain in the village for a number of days equal to the period which elapsed between death and burial. Sometimes, when burial was long delayed, the mourning party

765

[1] Op. cit., vol. 1, p. 107.
[2] Ibid.
[3] Stannus, 'Notes on natives of British Central Africa,' op. cit., p. 313.
[4] Macdonald, op. cit., p. 108.
[5] Vide infra, p. 267, 270.

3: Stannus D-5 (ca. 1912) 1922 FT7 Yao FT7

generous and popular, the donations may mount up to a useful sum. Dancing goes on late into the afternoon when all return to the village. 843

The man may not speak to his guardian again until after the birth of the child. The two women guardians, the *mbamusi* and the *nabanga*, as a rule cease sexual intercourse with their husbands during the same period or, at all events, during the last month before the birth of the child.

The child born of a woman who has not gone through *Litiso* is buried alive. [847]

Chieftainship. The Yao when they migrated to their present country were headed by a number of their chiefs. These eventually settled in different areas adjacent to one another, each ruling over a considerable tract of country. The chief was supported by a number of headmen, each of whom looked after a village; the chiefs and headmen in turn being assisted by the village elders. 622 643

Often among a chief's counselors one found a number of his relatives, and sons and brothers were often made headmen. A man assuming chieftainship often had to dispose of a brother of whom he was afraid. 643

Chieftainship is hereditary, the chief's name being passed on to each successor. Succession is to eldest son of the eldest sister or a son of some other sister. Failing these, it passes to a grand-nephew. If there is no acceptable adult nephew, a full brother may succeed.

Macdonald's account of the Malemya's succession[1] is, I believe, incorrect. The old Malemya (Nalutumbo) was succeeded according to custom by his nephew, Kasabola who, as Malemya, was called Ndalama. Kumtaja was not a younger brother of Nalutumbo or Kasobola, but a cousin of the latter. Ndalama was succeeded by a nephew, not the eldest but the second son of a sister, the eldest having already succeeded to the chieftainship of Kumtaja was therefore ineligible. The present Malemya will be succeeded by a grand-nephew, the son of a daughter of his eldest sister, his sister having no sons. [114]

A successor inherited all the wives and slaves of the deceased chief and all his goods and chattels, guns, ivory and gardens. Any small possessions might be divided among the deceased's children and in the case of guns, those who had always used them often laid claims not to be separated from their weapons; these claims were often allowed by the new chief. 643 428

In the same way, any ordinary man's successor is his nephew, the son of a sister, who inherits all goods and chattels and slave wives, but not free-born wives, nor gardens, which go to the free wives. Stock is generally divided among the children.

Before 1891, when a British Protectorate was formally declared over Nyasaland, each chief ruled supreme. He was consulted as to the dates for *Unyago;* he directed the harvesting, etc.; he proclaimed war and generally was paramount among his people. It will be seen, therefore, that he was a busy man, but he received no direct remuneration. His wealth consisted of slaves and ivory. Slaves he obtained in warfare and as blood money, 643 [556]

[1] Op. cit., vol. 1, p. 180.

3: Stannus D-5 (ca. 1912) 1922 FT7 Yao FT7

787 1918 speaks is invariably nasal in character and Chinyanja is the language always used. It is doubtless a case of what we should call ventriloquism. The custom is evidently of Mang'anja origin but in great favor with the Yao.

787 695 Divination also plays an important part in tracing thieves or stolen property or in picking out from a number of people anyone guilty of some crime. Several modes of procedure may be adopted. The *chisango* called *ndumba* may be used as the *chisango cha chipeta* (*chipeta*, a kind of basket). Medicine in the form of certain roots is placed on the ground and covered by the inverted basket on which is placed the *ndumba*. Each person in turn is requested to lift the basket and the guilty one is at once revealed by his inability to budge the basket off the ground. This method may even be used to reveal a man guilty of *usawi*.

787 Other methods of divination include a kind of trial by ordeal somewhat similar to a boiling water ordeal. *Kaundula* (from *ku-undula*, to tramp round, referring to the peregrinations made in search of what is lost, or *namlonda*, the Chinyanja word from *ku-londa*, to follow on the footsteps of) is the name of the witch-doctor who searches for stolen property or traces the thief. The same man may be called *mabumbula* in Chinyanja (from *ku-umbula*, to reveal) when he uses his instrument to detect in a crowd the person guilty of some crime. The *kaundula* uses the horn of a kudu stuffed with appropriate medicine, the actual *mise en scène* and methods adopted varying somewhat with different practitioners. The practice I believe to be a Mang'anja one and I think most of the operators were Anyanja men and not Yao, though the Yao, as with other customs, adopted the system fully. In my district, the *kaundula* was usually armed with a rattle; when the horn indicated the guilty individual, he intimated the fact to the assembled crowd by throwing flour over him.

When a search is to be made for stolen property, the horn is put into the hands of four men, alternate men pressing down and pulling up on the long horn, while the medicine man stands by, operating his rattle and exhorting the horn to do its work of revelation. I know a man who has on several occasions assisted in holding the horn; he said it simply seemed to drag him on in a series of jerky movements, sometimes going very fast, at other times moving slowly, dragging the holders "along the footsteps of the thief with the stolen goods" in and out of the house, through the bush, and across streams, until suddenly the horn dropped from their hands to the ground, where on digging, the stolen goods were found buried. (Cf. table turning, planchette, etc.)

[114] A good description of *kaundula* under the headings *mabumbula* and *namlondola* is given by Garbutt,[1] who describes the Mang'anja operators. In this same article, he makes the mistake of describing as *mabisahila*, the *juasaketela*. As I have stated above, the *juasaketela* is an order of medicine men who trap the man who is an *mawi* while in the *mawi* state, but the *mbisahila* points him out while he appears as an ordinary man of the village.

[1] H. W. Garbutt, 'Native customs in Nyasa,' (*Man*, London, 1912, vol. 12, p. 38-40).

3: Stanmus D-5 (ca. 1912) 1922 FT7 Yao FT7

never leave any food outside at night, not even the chaff from the grain she has been pounding, lest these most miserable of beings be attracted by it.

Chitewe is a word common to several tribes and among them appears to have various shades of meaning. Among the Wayao, the *itewe* are "the little people" of the leprechaun order. They rob the gardens and cause rot among the pumpkins; their little footprints can be seen where they have passed hither and thither; fruits and vegetables that they touch will become bitter. To prevent these disasters, the Yao, at the time when their crops are ripening, place different kinds of vegetables at cross-roads, hoping thereby to satisfy the itewe and prevent them coming into the gardens. As far as I am aware, the itewe have nothing to do with famine and are in no way connected with *Mtanga*, to be mentioned below, as Macdonald believed.[1] The *chitewe* is variously said to be "like a man but rather like an animal." He has two legs but goes on all fours.

The Yao describe another legendary race of "little people"[2] who used to live in this country and who may still be met with, — "who knows?" They were of a very small stature, grew long beards, were very touchy, quarrelsome, and fierce, and carried spears. When anybody met one, he was immediately asked: "*Mumbonele kwapi?*", "From how far did you see me?" and it was always well to pretend to have seen the little man coming a long way off and make him believe he was considered quite a big person; if you said "Hullo, I have only just spotted you!", he would immediately spear you. They are commonly supposed to dwell on the tops of high mountains and are iron workers. They are called the *Mumbonele kwapi*.

There is no relation as far as I know between these two classes of "little people," but I think these stories go to uphold the theory recently reiterated by Hastings Guilford in his Hunterian Lecture (1914) that folk-lore fables of hobgoblins, etc., have a basis in fact. He believes that dwarf races at one time were to be found, possibly over a very wide area of the globe. In this country, I think it may be that one sees the transition from historical facts to true fairy stories.

The Anyanja have the same legend about these "little people," the *mundi mwakuti* ("where-did-you-see-me"); it is indeed not only wide-spread throughout this country, (the Ahenga and Ankonde in North Nyasa district speak of the *mundimwanku* who ask the same question), but there is a very similar legend among the Akikuyu in British East Africa.[3]

The *chitewe* is doubtless the *chiwewe* of the Anyanja, mentioned in Scott's dictionary,[5] as Miss Werner[4] has supposed, for one finds that among the Anyanja at the southern end of the Protectorate, the *chitewe* is described as having only one side to his body so that he is invisible when viewed from the off side, thus resembling the *chiwewe* who has one half of his body made of wax.

[1] Op. cit., vol. 1, p. 71. [2] M. W. H. Beech, 'Pre-Bantu antiquity of East Africa,' (Man, London, 1914, p. 40-41).
[3] Op. cit., p. 97. [4] British Central Africa, op. cit., p. 98.

539 dogs to attack the Dzimwe and the dog rushed in at him but fell dead, killed by the wind passed from the bowel of the Dzimwe. The same fate fell to two more dogs. Then Kalikalanje called his dog, *Mawalanyanje* to attack the Dzimwe. *Mawalanyanje* flew at the Dzimwe, making wind at the same time as his enemy, and was unhurt. He bit and bit at the Dzimwe till he killed him. Then Kalikalanje came down from the tree and got medicine and his three dead dogs were brought to life again, and he was not molested further.

[114] Note. This story in only an incomplete form is given by Hind in his *First Yao Reader* and I have therefore thought it worth while repeating it in extenso. Miss Werner[1] has referred to Dzimwe but seems very doubtful of the meaning of the word. It occurs only in the story given above, common to both Wayao and Anyanja, and simply refers to a fabulous personality, one of whose attributes was the ability to change into various forms. Scott in his dictionary,[2] mentions a Chinyanja word, *Dzimwe*, an elephant, so called because of its large belly filled with masses of unchewed food.

Nalumbalapa, the Night-jar

One day when the night-jar was strolling along, he met some guinea-fowls and approaching their leader, he said, "I envy you when I see you going along accompanied by many of your people. I should be very glad if you would help me by giving me medicine to make me also a chief among others." So the guinea-fowl said, "That is all right, but you must come at the proper time when I am at home." In the evening, the night-jar went to the guinea-fowl and the guinea-fowl gave him some medicine and told him, "Take this medicine. You must then get some animals' dung and mix the medicine with a basketful of it. Choose a nice site and sprinkle it all over with this. Then build your own hut there. The rules about this medicine are as follows: If any people come to stay with you and do any damage to your crops, don't abuse them; speak gently." "All right," said the night-jar, and went away to follow out the instructions. When this was all done, one evening some one came and clapping hands at the door, called to the owner. The night-jar went outside and found a man with his wife and children. They had come to settle down with him. (He was going to be a chief among men!) So he told them to come in. After a few minutes, others came, and then all night others arrived until the house was full and others camped outside. Within two days, there was a big village. Then the night-jar went back and reported to the guinea-fowl. The guinea-fowl again bade him keep to the rules. Then the people made a big garden for the night-jar and planted cassava and many other things and they were all quite happy. One day, all the people came together and said they were going to make a bigger garden for their chief, the night-jar. The children went too, and played in one of the cassava gardens. One of them dug up some roots and showed them and the night-jar passing and noticing this, was very cross and began abusing the children and their

[1] British Central Africa, p. 223. [2] Op. cit., p. 138.

302 Shaving is a rite practised in mourning.[1] Some old men and women, especially medicine men, make a practice of never cutting the hair and never washing it (Pl. VII, fig. 2). One occasionally sees lunatics with very long hair in the villages.

[151]

The Yao do not follow the Angoni practice of tying up into tufts the hair which has been allowed to grow long with palm leaf string, but they sometimes tie up a single wisp and make it up with medicine; this is called *hukombi* or *ujombi* (plur.).

The scalp may be shaved in various fashions. Among men, it is quite common to trim the hair on the forehead, *ku-ejikila;* they must not, however, trim the hair behind (Pl. XVIII, fig. 2). Women, on the contrary, trim both in front and back; a man doing so would be laughed at. A woman for the ceremony of *Lilimo* shaves the front hair a little higher still, but she must be careful not to do so at other times, otherwise she would make herself a laughing stock (Pl. XVIII, fig. 10). The hair is sometimes shaved on either side of the midline in front, in imitation of temporal baldness; both baldness and this method of shaving are called *wamuwe* (Pl. XVIII, fig. 4). Or again, among old Yao men the crown is shaved; this and natural baldness are called *lulusi* (Pl. XVIII, fig. 5). It is a fashion much affected by old men and great annoyance is caused them by any young upstart who does the same. Other methods include for men *mpite*, "a rat's path," an antero-posterior median line shaved (Pl. XVIII, fig. 9); *ingolongondinje*, two shaved lines made from back to front on either side of the head (Pl. XVIII, fig. 3); for men and women, *lipundalitwile*, "the garden is (dead) overgrown", one lateral half of the head shaved (Pl. XVIII, fig. 7); for men, *nabacha* a crest of hair left along the mid-line, both sides of the head being shaved (Pl. XVIII, fig. 8); *wanni* (*chilumbe cha wanni*), "the moon," a crescent shaped area shaved on one or both sides of the head (Pl. XVIII, fig. 6).

The eyebrows and eyelashes are always left to grow normally among the Yao.

The Yao man used to take great pride in his beard; it was the object of a good deal of washing and combing. It grew to considerable length and was not cut or trimmed, but the hair growing down low over the throat was shaved, as was also the hair immediately below the mouth on the under lip and the moustache, as it was thought to get in the way when drinking. The whiskers were allowed to grow like the beard.

[832] [835] Hair on the chin or upper lip of a woman is rarely seen and on account of its rarity is much prized. Such hairs have a monetary value for making medicines, a single hair being sold for eight yards of calico or two shillings. Body hair is considered to be a sign of strength; on the chest, it is known as *champulowa* (*ku-champulowa*, to be strong). Body hair including hair on the back is by no means so rare as has been supposed. Sir H. H. Johnston says that he has never seen it,[2] a statement which shows lack of observation. The hair on the forearms and thighs is called *chenje* or *chenkonde;* Hetherwick translates this word,[3] I think wrongly, as hair on the body. Body hair is never removed in any way. A man named Katumbiti ("the little vulture") of Ulumba had a very large amount of body hair; he was likened to a baboon and was a source of much interest to the children who saw him.

[184]

[1] Vide supra, p. 241. [2] British Central Africa, op. cit., p. 395. [3] Op. cit., p. 111.

6: Mitchell E-5 (1946-1947) 1949 FT7 Yao FT7

121 Often there is some cultural obstruction to the giving of information of certain types. The Yao, for example, will not readily mention the names of deceased persons. Often young children or people who themselves had no children are completely forgotten. Many polygynous men cannot remember the number of children that they have fathered.

114 121 Nevertheless, in spite of these and other similar difficulties, some investigators have been able to publish a certain amount of material bearing on the problem of the rate of increase of non-literate populations in Africa. All of them have been based on samples, though none of these could be considered statistically representative. Such studies in recent years include one in Southern Nigeria,[1] one from Tanganyika[2] based on a substantial sample of women, while M. Fortes has published some material on the Tallensi of the Gold Coast.[3] Schapera, incidentally to a larger study, has published some material on the Tswana of Bechuanaland Protectorate.[4]

The analysis of the Yakö by Enid Charles and C. Daryll Forde was mainly concerned with the calculation of the male net reproduction-rate, while the Culwicks and Schapera calculated female net reproduction-rates. Fortes considered both the male and female net reproduction-rates. The Culwicks have so far presented the most complete analysis of this type of material but were not able to classify their material into five- or ten-year age-groups, though they did use a wider age classification. The Culwicks, Fortes, and Schapera have all used the number of girls born to women now past child-bearing as an estimate of the female gross reproduction-rate. There are objections to this procedure which are outlined below.

121 In this paper an attempt is made to present in more detail some demographic material on an African non-literate people. The main object of the paper is to estimate the probable gross and net reproduction-rates prevailing at the moment 125 in the areas studied. The data on which this paper is based were collected incidentally to a study of the social organization of the Yao people living in the Liwonde District of Nyasaland in Central Africa.[5] In this study a number of typical hamlets, varying from 5 to 50 or more dwellings, were visited and genealogies of the residents recorded. In 20 of these hamlets further details were secured on points of demographic interest. Each census in a village took a day or two, and individual censuses were taken between November 1946 and March 1947. In this analysis of the material I have assumed that the survey was done at the end of 1946. The survey was conducted on a *de facto* and *de jure* basis in that the population who had slept in a hamlet the previous night was enumerated, but the mobility of the population is so high that usually it was necessary to consider a *de jure* count as constituting the true population of the village. The twenty hamlets studied were grouped in three areas, two in the area under N. A. Kawinga and one in N. A. Nyambi's area.

[1] Enid Charles and C. Daryll Forde, 'Notes on Some Population Data from a Southern Nigerian Village', *The Sociological Review*, vol. xxx, no. 1 (April 1938).

[2] A. T. and G. M. Culwick, 'A Study of Population in Ulanga, Tanganyika Territory', *The Sociological Review*, vol. xxx, no. 4 (1938), p. 363, and vol. xxxi (1939), no. 1, p. 23.

[3] M. Fortes, 'A Note on the Fertility among the Tallensi of the Gold Coast', *The Sociological Review*, vol. xxxv, nos. 2-3 (July-Oct. 1943).

[4] I. Schapera, *Migrant Labour and Tribal Life*, London: Oxford University Press (1947), pp. 20 ff.

[5] This study was conducted as part of the Rhodes-Livingstone Institute's comparative study of the social organization of some Central African tribes. I am grateful to the Trustees of the Institute and to the Director, Dr. E. Colson, who have given me permission to publish this material.

Table V shows that the age-distribution for the Yao sample is very similar to certain other populations commonly held to have high birth-rates. There appears to be some correlation between the proportion of youth in a population and the gross

TABLE V. *Sundbarg's Age Divisions*

Population	Year	Youth 0-15	Middle age 15-40	Old age over 40	G.R.R.
Yao*	1946	47·3	45·6	11·0	..
Yao with abortions	1946	40·6	47·1	10·0	..
Hunkhunt†	1940	40·6	47·7	9·7	..
Kikuyuyu	1940	40·3	47·7	9·6	..
Guatemala	1940	42·6	46·3	9·1	..
India	1931	39·3	39·4	9·7	..
Japan	1935	38·9	47·9	13·1	0·98‡
Bulgaria	1934	34·4	49·0	17·0	0·90
Czechoslovakia	1930	26·3	54·3	19·3	0·88
New Zealand	1936	27·3	51·7	21·0	0·94
Denmark	1940	24·0	54·1	22·0	0·98
Sweden	1940	20·4	54·8	24·8	0·89

* There were 25 in the sample whose ages were not known. These were all adults and have been included proportionately in the two adult groups.

† All data for other populations taken from *The League of Nations Statistical Yearbook 1939/40*.

‡ Interpolated between 1930 (0·95) and 1937 (0·82).

reproduction-rate. Judging from the material presented in Table V a high gross reproduction-rate may be expected among the Yao where the proportion of youth is much higher than in the case of those whose gross reproduction-rates are quoted.

(F) *The Proportion of Children under 5 to Women 15-50*

Fertility may be judged more accurately than by this trichotomy by considering the proportion of children under 5 to the total number of women between the ages of 15 to 50, i.e. the fertility ratio.[1] In the whole sample there were 147 children under 5 and 152 women between the ages of 15 to 50. This is a ratio of 966 children per 1,000 women. However, women who are going away from the area for a long time, as, for example, wives of men who are going with their husbands to some labour centre, possibly in South Africa or Southern Rhodesia, usually leave their weaned children with their matrilineal relatives. This means that the ratio quoted (966 per 1,000) is, in reality, an over-estimate of the true ratio. In order to arrive at a nearer estimate of the ratio we must consider the children actually born to women in the sample. Table VI classifies all children both dead and surviving born to women between the ages 15 to 55. From this table we adduce that there were 151 women between the ages 15 to 50 (for whom details were available), and among them they had 141 surviving children under the age of 5. This is a fertility ratio of 738 per 1,000 women. Table VII shows the fertility ratio for 18 countries with their gross reproduction-rate for the same period as the fertility ratio.

[1] It is more usual to take the number of women between 15 and 44, though usually the age-group between 20 and 24 has been used. I have taken the age-limits 15 to 50 because of the early age of marriage, and because it appeared that the average age of cessation of child-bearing is about 50 (see Table VIII). For a discussion of the reliability of this measure of fertility where birth registration is not practised, see T. Lynn Smith, *Population Analysis*, McGraw Hill Book Co., New York (1948), p. 198.

6: Mitchell E-5 (1946-1947) 1949 FT7 Yao FT7

163 last twenty to thirty years, and that it was then returning to normal since the
171 number of live births in the under-50 age-groups agrees in the two surveys, but the figure for the over-50 age-groups is substantially lower for the Tanganyika material than for the Yao.

117 The Culwicks, Forde, and Schapera have used the number of live females born
128 to women past child-bearing as an indication of the gross reproduction-rate. It was
163 not possible to record whether the women in this sample had passed the menopause or not. From Table VIII we see that there is no upward trend in live births per woman over the age of 50. We may therefore take this age as representing the age at which child-bearing ceased. There were 43 women over the age of 50 and they had between them borne 133 live females. This is an average of 3·13 per female.
(171) This differs substantially from the figure that the Culwicks arrive at in their study, viz. 1·56.[1] It agrees, however, with the estimates made for the Tallensi (3·1)[2] and for the Tswana (2·34).[3]

There are, however, some serious objections to the use of this figure as a measure of the prevailing gross reproduction-rate. First, it does not take into account those mothers who did not survive the child-bearing period. If it is only the most fecund who die before menopause, we are, in fact, dealing with a sample which is unrepresentative, in that the least fecund are automatically selected. The opposite may also be true, of course, but the fact remains that such an estimate is based on an unrepresentative sample of mothers. Second, it represents the average fertility prevailing over the last fifty or sixty years. If there has been a large change in the fertility at some time during this period, this is included in the average and obscures the rate which prevails now. For example, the material presented by the Culwicks shows that the gross reproduction-rate must be higher than 1·56. The low figure in this case, they suggest, is caused by the famine which followed a rebellion in 1906.

(f) A More Direct Estimate of Fertility

128 In order to arrive at a figure which would reflect conditions prevailing more
163 recently, a series of tables was constructed, which showed (according to my census sheets) the number of children born in each year between 1917 and 1946, and the number of women in the different five-year age-groups for each of those years. Hence each woman who appeared in the first year (1917) was also counted in 1918. As each new year was considered some had turned 50 and were excluded, and others had turned 15 and were included. Therefore a gross reproduction-rate was calculated for each year from 1917 to 1946. These rates were averaged by adding together the number of women shown in each five-year age-group for five years and adding the number of children born during those five years, and by dividing to arrive at average specific fertility rates. The five-year averages were as follows:

1917-21	4·18	1932-6	2·23
1922-6	3·33	1937-41	3·22
1927-31	3·12	1942-6	2·83

There appears to have been a definite trend in this series, falling from the end of the

[1] The total of 3·13 children per woman was divided by 2 in order to arrive at the number of females per woman.

[2] M. Fortes, op. cit., p. 108.

[3] I. Schapera, op. cit., p. 15.

6: Mitchell E-5 (1946-1947) 1949 FT7 Yao FT7

last war to a trough in 1932–6 and then beginning to rise again. However, with a sample as small as this one, and since we are relying on memory for most of this information, it would be unwise to accept this as significant. These tables have in turn been combined into three tables each covering one ten-year period from 1917 to 1946. These are shown in Table IX.

TABLE IX. *Average Gross Reproduction-rates in Ten-year Periods since 1917 to 1946*

Age of women	1917–26			1927–36			1937–46		
	No. of women*	No. of live-born females	Annual average specific fertility rate	No. of women	No. of live-born females	Annual average specific fertility rate	No. of women	No. of live-born females	Annual average specific fertility rate
15–24	89	3	0·036	168	6	0·036	146	2	0·014
25–29	173	15	0·074	337	28	0·083	339	21	0·062
30–34	129	11	0·085	225	18	0·080	387	39	0·098
35–39	79	10	0·127	173	13	0·074	337	39	0·116
40–44	71	11	0·155	129	10	0·079	225	24	0·107
45–49	94	15	0·158	79	6	0·076	173	10	0·057
50–54	91	10	0·110	71	3	0·042	129	9	0·070
55–59†	35	5	0·077	94	3	0·053	79	6	0·076
Totals			0·820			0·723			0·798
G.R.R.		4·110			3·615			3·990	

* This does not mean that these totals represent the size of the sample. This is an average size and some women have been counted more than once.

† These rates are higher than might be expected. There appears to be no special reason why these rates should be so high, and the explanation probably lies in the smallness of the sample.

The obvious deficiency in this set of data is that the women who died are not included, and since many more of the 1917–21 cohort (i.e. those women who were in the child-bearing ages in that period) have died than, say, for the 1937–41 period, the rates calculated for earlier periods become more and more unreliable. There seems

TABLE X. *Average Gross Reproduction-rates over Ten-year Period 1937–46*

Age groups	1937–41			1942–6			1937–46		
	Women	Girls	Rate	Women	Girls	Rate	Women	Girls	Rate
15–24	60	..	..	68	2	0·029	128	2	0·016
25–29	158·5	13	0·065	144	8	0·056	302·5	21	0·061
30–34	201	14	0·070	195	25	0·128	396	39	0·098
35–39	149	18	0·121	201	21	0·104	344	39	0·116
40–44	96	12	0·125	156·5	12	0·088	252·5	24	0·096
45–49	85	5	0·059	94	6	0·064	189	11	0·058
50–54	45	3	0·070	86·5	3	0·035	129·5	9	0·069
55–59	37	4	0·108	42	2	0·048	79	6	0·076
Totals			0·618			0·565			0·755
G.R.R.		3·090			2·825			3·965	

no way of circumventing this difficulty for the earlier periods, but some correction for this may be included in the 1937–46 rates. All those women who were in the child-bearing ages when they died between 1937 and 1946 were estimated and

6: Mitchell E-5 (1946-1947) 1949 FT7 Yao FT7

128 included in the material that was prepared for Table IX. In this way it was possible
163 to construct Table X which shows as close an approximation as we can get to the gross reproduction-rate from the material on hand.

Since the exact date of death was unknown (i.e. day and month) it was assumed that at death the women were at the mid-point of the age-group. Therefore the figure 158·5 in Table X represents, for example, 157, 158 women who passed through one particular year and 1 woman who died in that year.

The revised rates for the two five-year periods 1937–41 and 1942–6 are not greatly different from those calculated without taking account of the women who died. The average gross reproduction-rate over the ten-year period 1937–46 falls within the limits of expected gross reproduction-rate as calculated from the fertility ratio (2·47 to 2·99; see p. 303), and is not widely different from the estimate derived from women who have passed child-bearing (3·15; see p. 304).

(f) General Conclusions about the Gross Reproduction-rate

163 In general we may observe that from the material on hand the gross reproduction-rate for this sample has always been high. This is confirmed since, first, the number of live-born females born to women over the age of 50 is high (3·15); second, the lowest rate calculated for the past is 2·23 for 1932–6, though not too much reliance should be placed on the validity of this; and third, the rate calculated for the last five years which, since memories of dead children would still be fresh, is probably quite accurate, is 2·83.

114 With a sample as small as the one used in this survey a certain amount of variability
163 is to be expected. Also since all ages are merely estimations based on the memory of informants, one can only expect approximations over fairly long periods of time. For this reason it is probably safer to use the five-year average 1942–6 as an indicator of the present gross reproduction-rate, or even the ten-year average 1937–46. In this case, we may estimate the present gross reproduction-rate at about 2·8 or 2·9.

4. The Net Reproduction-rate

128 Of course, no mortality statistics for the African population are available. Hence
165 it is necessary to construct a make-shift survival table in order to arrive at some estimate of the net reproduction-rate. This is set out in Table XI. In this table I have assumed that the mean age of each five-year group is 3 years older than the lowest age in that group, i.e. the mean age of the 35–9 age-group is 38. It would have been more consistent to take this mean to be 37·5, but since the ages at death are not accurately known there seemed little point in doing this.

The problem then becomes: what proportion of girls born to mothers of average age 28 years (for example), i.e. to the 25–9-year age-group, will themselves survive to be 28 years of age?

In order to arrive at this proportion all the girls born between 1934 and 1943 who were recorded on family census forms were abstracted, i.e. 131. Of these 16 died before reaching the age of 4, so that we can assume that 89 per cent. survived to the age of 4 and over. For the mortality of the children between 4 and 8, those born between 1929 and 1938 were considered. There were 111 of these, but 14 died before reaching the age of 4. Hence we consider only 98 (as recorded in column iii

6: Mitchell K-S (1946-1947) 1949 FT7 Yao FT7

This is partly confirmed by the fact that the increase in total population for parts of the Liwonde district, with which this survey was concerned, according to the official census, is about 2·62 per cent. per annum.[1] At this rate we could expect the population to double itself in about 26 years. A net reproduction-rate of 2 would mean that the population would double itself in one generation which we may take in this case to be about 25 years. Some of the increase shown in the census is no doubt due to immigration from Portuguese East Africa, but the high replacement rate suggested by this material tends to confirm the opinion of one Administrative official, who maintained that immigration has virtually ceased since 1931.

5. General Summary and Conclusion

From material collected in three groups of hamlets in Liwonde district of Southern Nyasaland it appears that the average gross reproduction-rate within the sample over the last ten years was about 2·3 while the net reproduction-rate was about 2·2. There is no reason to suppose that the fertility of this sample is vastly different from that in any other part of the district, since the hamlets visited were casually selected; nevertheless, the sample is not a random one (in the statistical sense) and it is unsafe to generalize from it.

The Nyasaland Administration has only recently introduced machinery for the registration of births and deaths.[2] Until, therefore, these statistics are collected there seems to be no alternative but to rely on estimates as uncertain as those made in this paper.

[1] The population of Nsanjiga, Liwonde, and Mpondi sections of which was formerly known as Liwonde district or Upper Shire District of Nyasaland, increased from 59,254 in 1926 to 64,840 in 1931. Extracted from the crude census returns in the D.C.'s office in Zomba.

[2] Actually the forms for this registration do not calculate all the categories of information necessary for the calculation of the gross and net reproduction rates. Such calculations are mainly of the ages of the mothers and ages at death, and they have been excluded, no doubt, because it is assumed that this information is unobtainable. It is to be hoped, however, that when the system has become established, these categories will be introduced.

Résumé

MALÉDICTIONS DES NUER (see p. 288)

L'auteur cite de nombreux exemples des malédictions employées parmi les Nuer et indique l'importance comparative d'y attacher, suivant le degré de parenté entre le personnage qui prononce la malédiction et celui à laquelle elle est destinée. Les malédictions des mères ont plus endurants que celles des vieuxes, et l'on n'entend à ce qu'un homme qui emporte au tombeau le sentiment d'avoir subi une injustice faite à son ennemi du mal affligeant plusieurs générations. Des malédictions prononcées n'affectent que rarement le lointain puisque faire du mal au lointain nuit à toute la lignée et pas seulement à l'individu. Pour être efficaces, les malédictions n'ont pas besoin d'être exprimées en paroles — une imprécation silencieuse, ou même un sentiment de dépit, peuvent avoir la même force qu'une malédiction prononcée.

7: Hetherwick M-5 (ca. 1900) 1902 FT7 Yao FT7

Unkulunkulu, which may therefore be rendered as "The old, old One," or "The great, great One." A like rendering may be given of the Yao form *mulungu*, the "Old One," or the "Great One." In this or a modified form *mwungu* (Swahili) it appears in all the Eastern group of the Bantu tongues as the equivalent for "God" (see Father Torrend's *Comparative Grammar of South African Bantu Languages*). To trace it as Father Torrend does to any connection with Moloch, the god of the Phœnicians, is to attach undue weight to a chance coincidence of sounds.

As we have already seen, the word *mulungu* is applied to the human finds when regarded as an *object* of worship, or as an inhabitant of the spirit world. But it is also used to denote that spirit world in general, or more properly speaking, the *aggregate of the spirits of all the dead*. The plural form of the word is rarely heard, unless when the allusion is made to the souls in their individualities. In its native use and form the word does not imply personality, for it does not belong to the personal class of nouns. Etymologically it is classed with the leg, heart, arm, head, etc., of the human frame. Its form denotes rather a state or property inhering in something, as the life or health inherent in the body. Among the various tribes where the word is in use as we have described, the missionaries have adopted it as the term for "God." But the untaught Yao refuses to assign to it any idea of being or personality. It is to him more a quality or faculty of the human nature whose signification he has extended so as to embrace the whole spirit world. Once after I had endeavoured to impress an old Yao headman with the personality of the Godhead in the Christian sense of the term, using the term *Mulungu*, my listener began to talk of "Che Mulungu," "Mr. God," showing that originally to him the word conveyed no idea of the personality I was anything to it.

And yet the Yao approaches closely to the idea of personality and a personal being, when he speaks of what *mulungu* has done and is doing. It is *mulungu* who made the world, and man, and animals. For in the interior of the continent, toward the north-west, beyond the plains and swamps of the Lungwa River and Lake Bangweulu, there lies, in Yao legend, an island in the midst of a lake called Kapitinya. On that island there is to be seen a large flat rock marked by the footprints of man and animals of all kinds. When that rock was once a heap of moist clay, *mulungu* created all living things and sent them across the soft mass, where their footprints remained to be afterwards hardened into the imperishable rock. Such is the Yao legend of the creation of the world, and *mulungu* is always the Great Creator.

Mulungu is also regarded as the agent in anything mysterious. "It's *mulungu*," is the Yao exclamation on being shown anything that is beyond the range of his understanding. The rainbow is always "*mulungu*," although some Yaos have begun to use the Mang'anja term "uta wa Lesa," bow of Lesa.

Offerings are made to the spirit world or to *mulungu* as the great agency in the affairs of human life. Outside the village, or beside the headman's hut, may often be seen a rough shed. In this are placed the first-fruits of the new crop,

9:Lawson Y-5 (ca. 1940) 1949 FT? Tao FT?
MARAVI FRY
[P.187 C]

* It is interesting here to compare the Nyanja and Tao with certain patrilineal peoples. Jacobs, finding similar behaviour patterns to the mother's brother and father's sister among the patrilineal Kaffraria of Portuguese East Africa as among matrilineal peoples, traces them to a hypothetical early matrilineal stage of social organization. Radcliffe-Brown, however, in his article on the Mother's Brother in S. Africa, suggests a different origin. At least two other non-Bantu patrilineal tribes—the Polynesian Tonga and the Nuba Hillmen—are like the Bantu-speaking in these behaviour patterns. May this behaviour not spring simply from a tendency to extend to one's mother's and father's groups behaviour suitable to mother and father respectively.

This explanation would not, of course Radcliffe-Brown realizes, apply to a matrilineal people like the Nyanja, where one hears of a respectful distance from one's father's sister, but is more under the authority of one's mother's brother than of one's father.

10: Sanderson D-5 (ca. 1920)1922 FT7 Yao FT7

A Note on Ceremonial Purification among the WaYao, Nyasaland.

55

By Meredith Sanderson, M.R.C.S., F.R.G.S.

One of the effects of European influence in Africa is the breaking up of tribal organization and discipline. The rights of the individual being no longer subordinated to the common good, customs formerly observed by the village community as a whole die out, while those affecting the individual are still practised. 171

This tendency is well seen in the ancient ceremonies of purification among the WaYao which are now rarely performed collectively, though the native, however highly "educated," still goes to the doctor to obtain the necessary medicines for removing, for instance, the contamination caused by contact with a corpse. [75] [764]

These collective ceremonies have already been described by various writers in respect of both Nyasaland and elsewhere,‡ but the Yao rites have not, I think, been given in detail, and the following notes may not, therefore, be altogether valueless. 114

The *Pepejila* ceremony (*kuppejila*, "to sweep") is common to most Bantu tribes. In its simplest form it used to be performed annually by the WaYao, at the beginning of the twelfth month, count of the months (lunar) being kept by means of a "calendar."‖ The whole village is thoroughly "spring-cleaned," all rubbish 796 [171] [805]

* At Sta, where the game is played on All Souls' night in the sacristy, Father Barnabas Myer tells me, the song is Spanish runs:—

Yaso, yaso, quando te vengo,
Yaso, yaso, hay mais.

Yaso, yaso when you come.
Yaso, yaso, I shall not be there any more.

Words suggested, presumably, to the hidden ball.

† See Sanderson, M. C., "The Zulu Indians," pp. 333-341, XXIII. *Annual Report, Bureau American Ethnology*, 1904.

‡ Fraser, "Robber the Beautiful," II., 179, sqq.

‖ A "calendar" consists of a string tied to two pegs in the wall of the house, or between two poles, on which are threaded twelve pieces of reed, bamboo or cornstalk. One of these is moved to the other end of the string each time a new moon is seen. [211]

2: Mitchell E-5 (1946-1949) 1956 FT7 Yao FT7

PREFACE

THIS book is the fruits of field work from September 1946 to September 1947, and from September 1948 to June 1949, as a Research Officer of the Rhodes-Livingstone Institute, among the Yao of Southern Nyasaland. Between June and September 1949 I was employed by the Nyasaland Government on a survey of the Domasi District where a Development Scheme was to be inaugurated. The detailed results of the Domasi survey have already been published separately,[1] and the general results have been incorporated here by permission of the Nyasaland Government.

By the very nature of his work a sociologist must depend heavily on others for help. As with all sociologists my greatest indebtedness is to the people amongst whom I worked. Here I must mention in particular Chiefs Kawinga and Chiwalo, and Village Headmen Cigwaja and Kapaloma, whose hospitality in one way and another helped me appreciably. I also thank Rajabu Kumpulula, who was my clerk and main informant during the second field trip.

I am grateful to the Nyasaland Government for assistance in many ways, and to several officers of the Administration for their kindness and hospitality to me. In particular, Mr. E. C. Barnes, then Provincial Commissioner in Blantyre, encouraged me by his interest in my research. Mr. Martin Lewis and Mr. R. P. Errington, successive District Commissioners at Zomba, by their sympathetic understanding of the rôle of an anthropologist, and their hospitality in Zomba and Blantyre, did much to make field work less of a burden than it might have been. The hospitality of Mr. Richard Leach and Mr. H. Gardner, then of the Agricultural Department, and of Mr. E. Hemmings of the Native Tobacco Board, also eased the discomforts of field life.

To my teachers and colleagues I owe a special word of thanks. I would like to acknowledge here my debt to two of my teachers at the Natal University College who, during my undergraduate

[1] 'An Outline of the Social Structure of Malemia Area', *The Nyasaland Journal*, iv, 2 (July 1951), 15–48.

842 the red beads, he is jeered at and laughed to scorn. In this cord, the white beads are held to indicate semen, the red beads menstrual blood.

843 *Lítiwe:* This ceremony is enacted at the time when a young married woman quickens with her first child. *Lítiwe* (*lu-tiwa*, to plait) refers to the plaited cord put round the woman's neck. The woman and her husband both are present, and in addition, only women, possibly with their babies.

For the man, *Lítiwe* is looked upon as the third or completing ceremony of his *Unyago*. He must have been to *Lupende* and *Chipute*, otherwise he cannot be admitted to *Lítiwe*. If, however, the husband is not eligible, some other man who has completed his *Unyago*, is married, and has children, may act as proxy to a woman at *Lítiwe*.

In every district there is generally some woman who arranges and conducts the ceremony. She is called *nakunga;* naturally, no European has been present at *Lítiwe* but my information was gained from Kuliati, a woman who for years acted as *nakunga* in the villages round Malenya's kraal, and Chilundana, her old mother who had acted in the same capacity before her and who had come from the old Machinga country where her mother in turn had been a well-known *nakunga*.

[115] When a woman quickens with child for the first time, her women-folk visit the local *nakunga*, saying, "We are going to shave so and so (naming the woman) and to get bananas. Tomorrow, we start pounding flour. In three days we shall be ready, and you will come over to arrange things." At the appointed time, the *nakunga* having partaken of food early because she will not eat for the rest of the day, goes out of the village to some spot a half-mile away in the bush and there sees that all preparations are made and sufficient food collected. The food is supplied by the mothers of the man and woman, and consists essentially of beans (*njoma* and *ngunde*), porridge, sugar-cane, and bananas, but no beer.

All being ready, a procession in single file leaves the village for the appointed place, the woman's sponsor leading, the woman followed by the husband and his sponsor (a woman), and the married women assembled from nearby villages. The sponsor is known as *nkumwai* or *nlombwe*. Neither *nkumwai* nor *nakunga* may have sexual relations with their husbands till after the birth of the child. The woman wears bark-cloth stained black, but may wear blue cloth on returning to the village, while her husband is decked out in his finest cloths and ornaments. They have partaken of food early in the day as they fast until the next day.

Arrived at the place, the man and woman take up their positions on mats separated from each other by some twenty or thirty paces, each with his *nkumwai*. The man's *nkumwai* sits on the same mat with him and never leaves him throughout the ceremony. The woman preserves a dignified quiet but the man is expected to make the most of himself sitting with hands on hips, and displaying his fine clothes worn after the fashion of a chief.

While all the assembled crowd of women sit round in a semi-circle, the *nakunga* commences the proceedings, singing a number of songs to the woman and the man in turn,

1: Tew E-4 (no date) 1950 FT7 Yao FT7

ETHNOGRAPHIC SURVEY OF AFRICA

EDITED BY DARYLL FORDE

EAST CENTRAL AFRICA

PART I

PEOPLES OF THE LAKE NYASA REGION

BY

MARY TEW

[Title Page]

Published for the
INTERNATIONAL AFRICAN INSTITUTE
by the
OXFORD UNIVERSITY PRESS
LONDON NEW YORK TORONTO
1950

1: Tew E-4 (no date) 1950 FT7 Yao FT7

I. REGION OF MOZAMBIQUE

YAO, MAKUA-LOMWE, MAKONDE

In the region between Lake Nyasa and the east coast of Africa, between the Lukuledi river in the north and the Zambezi in the south, there is a congeries of peoples whose culture is very similar over the whole area. They are the *Makonde* group, the *Yao* and the *Makua-Lomwe* peoples. Of these only the Yao has been studied in detail. The scanty information about the other inhabitants of the region will be summarized after the fuller summary of the Yao material, so that points of similarity and difference may appear more clearly. Fortunately for this procedure the Yao occupy a central position, from which they may be taken to represent in many ways the culture of the neighbouring peoples. 101 171

The *Makonde* inhabit the Makondi plateau between the Lukuledi and Ruvuma rivers (39° and 41° longitude). Closely related to them are the *Mavia*, on the plateau of that name, south of the Ruvuma; the *Mwera*, north of the Lukuledi river, on the Rondo plateau; and the *Matambwe*, in the Ruvuma valley. It is possible that the *Ngindo*, *Ndonde*, and *Ndendeule* should also be included. This group seems to be culturally and linguistically distinct in several points from the Makua and Lomwe, and the Yao, although they have in common the main features of political and social organization. 000

The region of the *Yao* is between the Ruvuma, Lujenda, and Luchilingo rivers. They also extend into Nyasaland and Tanganyika Territory. 131

The *Makua* occupy the area between the Lujenda and Lurio rivers and the coastal strip from the mouth of the Lurio nearly to Quilimano. 000

The *Lomwe* are sometimes regarded as a sub-branch of the Makua, but probably have as much right to be called a separate tribe as the Yao. They are bordered by the Makua on the north, east, and south, and by Maravi on the west. South of them, around Quilimano and east of the Mlanje mountains, are the *Cuabo*,[1] related to the Makua and Lomwe, and also the Podzo, on the south bank of the Zambezi delta.

The region is forested lightly or heavily, and varies in character according to the elevation, soil, and humidity. The coastal belt from Mozambique northwards has thorn-bush vegetation, thick in parts, giving way to light forest and grassland farther inland. In the uplands there is good forest, broad-leaved and evergreen, and deciduous trees near the lake district. Throughout the territory there are narrow strips of richer vegetation along the watercourses, and along the coast mangrove swamps occur at intervals. In the highlands the mornings and evenings are cool and pleasant for eight months of the year, and it is even cold at night in May and August, temperatures of 50° and 60° F. being common in the day. In the hot season the heat is severe, especially in the valley of the Ruvuma. The mean annual rainfall for Mozambique is 39·50 in. and for Likoma on the lake, 39·9 in.[2] 133 132

The people are primarily cultivators, but the Yao keep cattle in the highlands. Both Yao and Makua traded with the Arabs and were energetic slave-raiders. The coast Makua and most of the Yao are Islamized. 105

[1] *c*- pronounced as *ch*-.

[2] *Handbook of Portuguese East Africa*, 1920, pp. 68–77.

[P.1]

1: Tew E-4 (no date) 1950 FT7 Yao FT7

105 All these peoples have in common the following points of social organization: matrilineal clans, matrilocal marriage, residence in small villages under independent chiefs or headmen. They have elaborate initiation schools with circumcision for boys, and initiation without an operation for girls. It is mainly by variations in the initiation rites that their cultures can be distinguished from one another. They also distinguish themselves by linguistic variations and by cicatrizations. This is the region of the [301] *pelele*, or lip-ring, although Yao do not wear it.

THE YAO

TRIBAL AND SUB-TRIBAL GROUPINGS AND DEMOGRAPHY

Nomenclature

101 The name of the tribe is spelt and pronounced in a variety of different ways: Yao, Ayo, Veiao, Hiao, Wahiao, Wahaiao, Wahyao, Ayawa, Myao, Achawa, Wajao, Adjao, Mujoa, Mujanos, Adsawa, Adsoa, Mudsau. Sometimes they are referred to by the name of one of the sections of the tribe or of one of the leaders: e.g. Amachinga, Amangoche, Massaninga (also spelt Amasaninga and Amazaninga), Chiwala, Katule, Kalenje, Mdeule.[1]

Grouping

101 The Yao claim a hill called Yao, near Muembe, between the Rivers Lujenda and 131 Luchilingo, as the original centre from which they dispersed. The main body of Yao 6M is in Portuguese East Africa, and there are large settlements in Tanganyika and Nyasaland.

(*a*) *Portuguese East Africa.* The two main divisions of Yao in Portuguese East Africa are around Muembe and around Mtarika, on the Lujenda river.[2] Immediately south of the lower Ruvuma and at its mouth there are two smaller groups. The Yao occupy most of the territory between the Msinje, Luchilingo, and Ruvuma rivers in their upper courses.[3]

(*b*) *Tanganyika.* Yao entered Tanganyika Territory at two separate periods. In the 1850's they immigrated into Masasi, Chiwata, Newala, Tunduru districts and around Mikindani and Kyonga.[4] The other two groups are more recent comers: one (about 3,000), were taken as war-captives by the Ngoni in Songea district; the other (about 45,000), in the upper Lukuledi valley in Lindi district. They came in from Portuguese East Africa about 1912.[5]

(*c*) *Nyasaland.* There are four main groups of Yao:

(i) The largest group lives in the Southern Province, in upper Shire, and south Nyasa districts.

(ii) The second is near Blantyre, Chiradzulu, Zomba.

(iii) A small group is settled in a belt on the west coast of Lake Nyasa at Domira Bay.[6]

[1] Hecht, 1935, p. 7 n.; Hetherwick, 3, 1902, p. xviii; Abdullah, 1919; Burton, 1873, p. 81 n.
[2] *Handbook of Nyassa Co.*, 1898, p. 20.
[3] Johnson, W. P., 3, 1893.
[4] Weule, 1, 1909, p. 140.
[5] *Handbook of German East Africa*, pp. 56, 62.
[6] Murray, 1932, p. 246; Lowe, 1934, p. 37; Hetherwick, 4, 1927, p. 185.

1: Tew E-4 (no date) 1950 FT7 Yao FT7

(iv) Another group is on the south-west side of the lake, north of the Ngoni at Dedza and east of the Ngoni of Ncheu district.[1] 101 131

Although these are the main concentrations of Yao, smaller communities are scattered through most of the districts of south Nyasaland. 619

102 133

MAP SHOWING MORE IMPORTANT SITES CONCERNED WITH YAO INFILTRATION

Distribution of Yao shown as a percentage of the population of each district
(1931 Census)

Over 50%:	South Nyasa	75%	10–20%:	Dedza 16%
	Upper Shire	60%		Dowa 8%
				Mlanje 6%
30–40%:	Blantyre	38%		Cholo 5%
20–30%:	Chiradzulu	26%	1–5%:	Chikwawa 2%
	Zomba	26%		Ncheu 1·3%

History

Nothing is known of the history of the Yao before their settlement at Muembe.[2] Their contact with the Arab traders from the east coast had probably continued for 200 years before the Europeans arrived.[3] When Lacerda wrote in 1798 the Yao were 176

[1] Codrington, 1898, p. 512.
[2] Stannus, 4, 1922, p. 231; Heckel, 1935, p. 7; Murray, 1932.
[3] Livingstone in 1866 noted the strength of Arab influence.

1: Tew E-4 (no date) 1950 FT7 Yao FT7

175 even competing with the Arabs for the inland trade.[1] At some uncertain date there were two migratory movements away from the original home of the Yao. The first
175 was a scattering from Hill Yao to surrounding hills, possibly due to internal dis-
167 sension.[2] The next movement was caused by an attack of the Makua between 1850 and 1870.[3] One party moved northward, finally settling in Tanganyika, as has been mentioned. Four parties moved south into Nyasaland.

(a) *Achisi Yao*, who first moved from Mwembe to Mchisi hill, and then to Nyasaland, where they are represented by those under Katuli Native Authority.

(b) *Amasaninga Yao*, who first moved to Lisaninga hill, near the Lutwisi river, and then to the south-east of Lake Nyasa, where their descendants are now under Makanjira Native Authority.

(c) *Amangoche Yao*, first went to settle at Mangoche, near Fort Johnston. They were later driven out of Mangoche, by the last group, and scattered.

(d) *Amachinga Yao*, first went to the vicinity of Mandimba hill, near the source of the Lujenda river. They were ousted from this fertile valley by the attacks of the Lomwe, and came into Nyasaland in four parties.

One party of Machinga Yao under Nkata (later called Jalasi, or Zarafi) attacked the Yao at Mangoche, drove them south and themselves finally settled there. Another party under Nsamala came with Nkata as far as Mangoche, then turned off to Chiusi hill in the Fort Johnston area. A third group, under Malemia and Mtumanja, moved down to the Domasi valley via Isale hill, where they were attacked by the fourth Machinga group, under Kawinga. The latter had also accompanied Nkata's party as far as Mangoche, then crossed the Shire river to the west; here they were attacked by the Maseko Ngoni under Chidisonga and moved south-east to Chikala, which they occupied until defeated by the British. Liwonde, the brother of Kawinga, moved to the Shire river.

The Amangoche Yao, after they had been scattered by the Amachinga, settled some in the Chitunda part of Dedza district, some at Mount Zomba, some migrated to Ndirande hill near Blantyre, some to Soche hill, some to Chiradzulu, Nguludi, Malawi, and Ndudu hills. These Amangoche Yao constitute about half the Yao population in Nyasaland.[4]

The Yao invasion of Nyasaland was not an organized military expedition, like that of the Ngoni. The first immigrants came peacefully in small kinship groups. They
[797] took advantage of Nyanja factions to consolidate their position, until, by 1876, when the Church of Scotland Mission was established at Blantyre, the Yao were a ruling class dominating the earlier inhabitants.[5] At the same time they vigorously carried on their slaving activities. In 1893 Thompson noted that the fertile country of the watershed between the Ruo and the Shire rivers was uninhabited because of Yao raids.[6]

The Yao of Nyasaland suffered from Ngoni raids, but were never subject to them. Several tributes have been paid to their soldierly qualities,[7] and indeed it took five years from 1891, when the Protectorate was declared, before the Yao were subdued
[567] and the slave trade, to which they had been principal parties with the Arabs, sup-

[1] Burton, 1873, p. 37.
[2] Abdullah, 1919.
[3] Hockel, 1935, p. 7; Murray, 1932.
[4] Historical notes in unpublished administrative papers.
[5] Du Plessis, 1929, pp. 296 and 304.
[6] Thompson, 1882, p. 99.
[7] Sharpe, 1897, p. 12, and Stigand, 1909.

1: Tew E-4 (no date) 1950 FT7 Yao FT7

175 167

pressed. Two contingents of Sikhe were sent unsuccessfully to take Kawinga's fortress in Chikala in 1894; Makanjira was defeated in 1894, Kawinga, Jalasi, Matipwiri, and Tambala in 1896.[1] They were later allowed to return, but they were not recognized as chiefs by the Administration.

The end of tribal wars and of slave-raids made large defensive settlements unnecessary, and the peace saw the splitting up of communities, which rendered the task of the Administration more difficult. The abolition of domestic slavery, by reducing the power of headmen, further contributed to the tendency to live in small scattered settlements. In 1912 the Nyasaland District Administration Ordinance was passed with the object of concentrating the villages into larger communities. [567] [657]

The first movement of Yao from Portuguese East Africa to Masasi took place about the end of the 1850's. According to one account they were originally expelled from the territory between Mataka's and Unangu by the Masoko Ngoni.[2] Then the Makua attacked them, breaking up the tribe still more, so that they migrated north to Masasi, the south-west of the Makonde plateau, and the banks of the lower Ruvuma. At Masasi they were again attacked by Ngoni, but defeated them, and then retired to the Makonde plateau, where they were again attacked by Ngoni. There is a tradition that at some time after 1850 the region was toured by an emissary of the Sultan of Zanzibar, 'Bakiri', who gave the whole country to Matola, a Yao chief, to rule from Newala. In the area between Masasi and the Ruvuma river the Yao are in a majority and politically supreme over their neighbours the Makonde, Makua, Ngindo, Matambwe, and Ndonde.[3] At Mtua, on the Makondi plateau, there is a settlement of Yao who were rescued from the Ngoni on the east shore of Lake Nyasa by Captain Engelhardt, and transferred there. These in outward appearance could hardly be distinguished from the Swahili of the coast.[4]

Demography

The Yao population of Nyasaland has increased steadily but its relation to the total population has not increased: 161

1901		1931		1945	
Yao population	*Percentage of total population*	*Yao population*	*Percentage of total population*	*Yao population*	*Percentage of total population*
185,363	15·4	246,313	15·4	281,277	13·74

Even in the predominantly Yao areas the population is not homogeneous, either tribally or linguistically. In the three areas in which there are a large number of Yao (Kawinga and Liwonde of Zomba district and Nyambi of Fort Johnston), they represent roughly 48·6, 75, and 73 per cent. of the total population, the next most important section being *Nguru* (Lomwe) immigrants from Portuguese East Africa.[5] Some Nguru call themselves Yao when questioned. 162

The density in these areas is respectively 65 [illegible], and 52 per square mile.[6] This

[1] Cadrington, 1898, p. 320; Maughan, n. 1909, pp. 86, [illegible], 130–3; Scheut, 1893, p. 422.
[2] Livingstone, 1874, p. 70.
[3] Weule, 1909, pp. 108–46.
[4] Ibid. p. 98.
[5] Mitchell and Comm, 1926, 1931, and 1945.
[6] 1945 Comm.

1: Taw E-4 (no date) 1950 FT7 Yao FT7

162. relatively close settlement should be contrasted with conditions 60 years ago, when villages consisted of from 10 to 20 huts, with an average population of 100.[1] The size of villages now ranges from a few huts to 60 or more, with a total average population of about 40 per village, ranging from 15 to 200.

From a sample taken from these groups of hamlets in Liwonde district, it appears that the average gross reproduction rate over the last ten years has been about 2·9, while the net reproduction rate was about 2·2.[2]

Statistics are not available for the Yao population of Portuguese Nyassaland. Livingstone noted that at Mtarika's on the upper Ruvuma (not the town now on the Lujenda but an older one) there was an immense population. Mataka's town had about 1,000 houses, and there were many villages around.[3] The Yao fastnesses at Unango and Mtonya were also thickly populated.[4] In the barren country south of the Ruvuma, between its confluence with the Lujenda and the beginning of the Mahondi plateau, the country was almost uninhabited.[5]

In Tanganyika the Yao are distributed as follows:[6]

District	*Total population*	*Total children*
Tunduru	32,761	13,315
Masasi	15,009	5,048
Kilwa	6,560	1,616
Lindi	6,415	1,574
Mikindani	1,614	483
Songea	7,550	2,879
Dar es Salaam	1,869	230
Rufiji	1,025	189
Tabora	1,009	320
Other districts	3,277	820
	78,299	26,674

Percentage children to adults	*Percentage males to females*		*Increase since*	
	Adult	*Children*	*1928*	*1921*
32	91	113	25,855	34,699

LINGUISTIC DATA

197. The Yao language is spoken over an area extending from near the east coast of Africa to the east shore of Lake Nyasa, and from the sources of the Ruvuma in the north to the Lujenda in the south.[7] There are also two small pockets of Yao who crossed the lake to the west side, who speak their own language.

Duke classifies it as one of the group of Bantu languages in the East Central Zone, which constitutes a bridge between the languages of the East and Central Zones. He

[1] Macdonald, 1882, p. 144.
[2] 1874, pp. 68, 72.
[3] Thompson, 1882.
[4] *Census of Native Population*, 1931, Table VI. There are also 4,832 people at Kilwa called Machinga, whose name indicates that they are probably of Yao origin.
[5] Hetherwick, J. 1902, p. 208.
[6] Mitchell, 4.
[7] Maples, C. J. 1895.

1: Tew E-4 (no date) 1950 FT7 Yao FT7

places it in the same group of languages as Makua, Nkonde, and Tumbuka, but not with Makonde. He counts Nginda as a dialect of Yao.[1] Guthrie places it in the Makonde group, but not in the Makua-Lomwe group.[2] 197

The Yao language shows very little dialectical variation, which is attributed to the age-long Yao love of travel. Such differences as occur are found chiefly in accent or idiom, not in grammatical structure. There are five different divisions corresponding to the different branches of the tribe: (*a*) *Amahale*, near the sources of the Ruvuma; (*b*) *Mwembe*, near Mataka's, south of the Ruvuma; (*c*) *Mwaninga*, near the south end of Lake Nyasa; (*d*) *Mangoche*, near Blantyre; (*e*) *Machinga*, on Mounts Chikala and Zomba.[3]

PHYSICAL ENVIRONMENT

The Yao boundary on the west, where they mix with Nyanja peoples of the east lake shore, is a line of hills about 1,500 ft. above the lake level, extending south to Mangoche. Starting north-east from the fertile valley of the Mandimba, there is a fairly level plain, watered by other tributaries of the Lujenda, as far as Mataka's and Mtarika. On the east side of the Luchilingo river there is a fairly continuous line of mountain fastnesses and hills, and from the source of the Mainje to its confluence with the Ruvuma, there are lines of fortresses to the east and west, traversed by steep mountain tracks. From the Mainje source to the Ruvuma the country is cut by deep streams and crowned by mountains 2,000 to 5,000 ft. high.[4] On the south bank of the Ruvuma, below the confluence with the Lujenda, the country is a semi-desert, with barren stony soil, little water, and plentiful game. The Yao also inhabit the western edge of the Makondi plateau, where the valley of the Ruvuma widens into a great plain. Here the sandstone of the Makondi plateau is denuded and the soil is barren and stony. The Makondi bush gives way to thin open forest of mimosa and other trees.[5] Most of the Yao country in the east of Portuguese East Africa is tsetse infested, but in the interior, approaching the east shore of Lake Nyasa, it is capable of supporting fine herds.[6] 133 [131]

South Nyasa district is mountainous in the east; the plain in the west stretches into Dedza and Ncheu districts. Owing to scarcity of water in the dry season this plain is thinly populated. The soil of the plain is sandy, except on the shore of the lake and the river bank, where it is rich alluvial soil; in the hilly parts the soil is clayish. During the last few years the lake level has risen and on the lake shore and the banks of the Shire river water is plentiful throughout the year. Smaller rivers have enough water all the year round to supply villages. The average annual rainfall at Fort Johnston is 33 in. for the last six rainy seasons, but the general average is 28 in. The average mean temperature is 75° F. The climate in the plains and at Fort Johnston is hot and trying in the hot season, but cooler on the hills. The greater part of upper Shire district is below 2,000 ft. in altitude and hot and unhealthy. In the dry weather most rivers are 132

[1] 1925, p. 65.

[2] 1948, p. 62. Naturally most of the earlier information support Duke's classification, since they are mainly the sources on which it was based (Hetherwick, op. cit., Meredith Sanderson, 1922, p. 22). Affinity with the language of the Gulf of Guinea has been claimed for Yao by Dr. Albert Drexel, of Innsbruck, quoted by Heckel, 1925, p. 7.

[3] Hetherwick, 3, 1902, pp. xix–xxi; 1, 1893, p. 64.

[4] Johnson, 3, 1893.

[5] Thompson, 1882, pp. 67–78.

[6] Hamilton, 1923, p. 12.

1: Tew K-4 (no date) 1950 FT7 Yao FT7

completely exhausted or reduced to a mere trickle. The average annual rainfall over the last ten years is 29·75 in. The shore waters of Lake Pamalombe are well stocked with fish. Both districts are well wooded, with a large variety of timber trees. In the dry sandy soil where the population is unable to live for lack of water, the prevalent type is *tsanya*. A few c[illegible] [illegible]ithills from Zomba to Chikala are conserved as Forest Reserves.[1]

MAIN FEATURES OF ECONOMY[2]

The Yao are chiefly agriculturists, and in the old days were also hunters. As they live largely in tsetse-infested areas, they do not keep cattle, except for a few herds near Fort Johnston and Zomba, in Nyasaland, and on the east of Lake Nyasa,[3] in the mountains of the Rovuma valley around Matola's.[4]

Abdallah describes a time when the Yao were economically self-sufficient, making their own bark-cloth, weaving, burning herbs for salt, and working iron for the tools they needed. Nevertheless, the tradition of eastward journeys for trading with the Arabs was well developed before the Europeans came to the country. They used to trade cattle and salt from the Manganja and Lomwe for tobacco and hoes, and in exchange for slaves they got from the Arabs gunpowder, guns, swords, beads, coloured cloths, earthenware, and foodstuffs.[5] Slaving expeditions were among the most important activities of the chiefs.[6] The old tradition of the absence of the men from the village owing to these expeditions, is continued in modern times by soldiers and labour migrants to Southern Rhodesia and the Union. These men send back remittances to the area, but the main population is supported by agriculture. Cash is needed for purchasing salt and cloth, for paying certain dues and fines formerly paid in kind—adultery compensation, diviner's and initiation fees—as well as for tax and rent. Consequently, while certain crops, such as tobacco and ground-nuts, are grown for cash, any food crop is liable to be sold in one form or another in local markets or by the roadside.

The food crops are maize, sorghum, finger millet, sweet potatoes, ground-nuts, legumes. Fish is an important article of diet. Eggs are believed to cause sterility and are only eaten by those outside the child-propagating age; milk is disliked and never consumed.[7] *Termite alates* (flying ants) are a much relished food when they come out on nuptial flights. Rice is considered a superior food, and is eaten when possible on ritual occasions.[8]

Tobacco is the main cash crop, with individual production under the supervision of the Agricultural Department. The average cash earned per grower in 1943–4 was £5. 5s. This is overwhelmingly an external trade. Ground-nuts, which are sold at government-controlled markets to licensed buyers, bring in only a few shillings a year to the average seller. Women obtain cash by selling beer. At the lake shore the fishing industry is very important. Natives owning big nets are said to make between £20

[1] Murray, 1931, pp. 147–61.

[2] Unless otherwise stated, the information is from J. C. Mitchell, and relates to the Yao of south Nyasaland.

[3] Livingstone, 1874, pp. 32 and 60.

[4] See Livingstone, 1874, p. 68; Young, E., 1877, p. 130; Thompson, 1881, p. 38; Sohnet, 1893, p. 422; Maughan, c. 1900, pp. 86–7; Lewis, 1924, pp. 32–3.

[5] Young, E., 1877, p. 100.

[6] Abdallah, 1919, pp. 10–11, 28–30.

[7] Sohnet, 1893, p. 14.

[8] Sohnet, 1893, p. 14.

1: Tew K-4 (no date) 1950 FT7 Yao FT7

and £10 per annum. It is profitable to carry fresh fish inland by bicycle even as far as Blantyre,[1] as the shore price to the retailer is 4s. a load, which later may fetch from 18s. to 24s.[2] Two on the south-west lake shore grow an excellent quality rice.[3] Rice is also grown near Lake Chilwa, but is mainly sold in the market organized near the lake shore by the Agricultural Department.

Division of Labour

The men build the house, hoeing, fishing, make the nets, baskets, grain-store, game-traps, and, in the old days, the bark-cloth. He cultivates the tobacco. He cuts down the trees and may help with the hoeing and harvesting. The woman hoes, sends the flour of the hut, sweeps, cooks, brings firewood, draws water, brews beer, makes the pots and pipes.[4]

Land Usage

There are two types of garden in the Yao areas south of Lake Nyasa: one the ordinary garden in which the staples grow, and second, gardens along the stream beds. These latter are especially valuable for providing out-of-season crops. In addition most householders have a few small plots for tobacco and ground-nuts.

The main garden is cultivated by the slash-and-burn method, common in Central Africa. The Yao, unlike the Bemba, garden occupies the whole area cleared. Burning is done just before the rainy season (October–November). The ash and soil are heaped into elongated mounds and grain is planted along the ridges. Gardens may be cultivated for more than five years. In the second and subsequent years of cultivation the stalks and weeds are piled up and burnt. There are signs of soil impoverishment. The gardens are cleared in August, and heaped to dry for burning. After the burning the seeds are planted in late November. By February and March green maize is available to supplement the diet, and by the end of April the crops are ready to be harvested. The maize is stored in wicker containers, while sorghum is stored in the huts on a stand. Cassava is planted in large mounds made by turning the turfs over, so that the roots are outside the mound and the vegetable matter inside. Legumes are planted in smaller gardens, or interplanted with the main crop. Ground-nuts are stored, after being shelled, in mud-plastered wicker containers, designed to be rat-proof. Tobacco is planted at the sides of the streams for hand-watering in the seedling stage, and then transplanted about January. The leaves are ready to be plucked about April and soon afterwards they are marketed. Sweet potatoes are planted in the rainy season, and are ready for eating in May. The stream gardens yield out-of-season crops—maize, beans, pumpkins, and also sugar-cane, which is used in the initiation ceremonies.

Craftsmanship

The Yao have few skills. All cultivation is by hoe; axes and knives are their only other technological equipment. The men make mats from reeds and palm leaf, and the women make pottery. The huts are strongly built from poles laced with bamboo and plastered with mud. The roof is thatched with grass. Under Arab influence the

[1] *Census of Native Population*, 1931, p. 16.
[2] Cubbington, 1948, p. 313.
[3] Swanson, n.d. 1900, p. 136; Macdonald, 1882, vol. I, p. 150.
[4] Aylin, 1931, p. 19.

1: Tew E-4 (no date) 1950 FT7 Yao FT7

Yao make square houses.[1] Panelled doors and glass windows, deck-chairs and palm furniture are becoming more and more popular. The men wear long Moslem robes and the women are clothed in cotton. In the rural areas there are usually a few craftsmen who still ply their trades as carpenters and blacksmiths, though the latter no longer smelt, but use scrap-iron.

Labour Migration

Statistics are not available for the Yao of Portuguese East Africa or Tanganyika Territory. Yao constitute 34 per cent. of the total population of South Nyasa district, 13 per cent. of upper Shire, 11 per cent. of Blantyre and Zomba.[2] The proportion of labour migrants in these districts was in 1937 as follows:[3]

District	*Adult males fit to work*	*Percentage of migrants*	*Number producing economic crops*	*Number of subsistence producers*	*Shillingers not heard of since 1930*
South Nyasa	24,230	27·1	2,612 (11%)	19,005 (79%)	873
Upper Shire	24,873	13·9	2,333 (10%)	16,609 (67%)	933
Blantyre	15,330	13·6	3,388 (13%)	10,165 (40%)	986
Zomba	16,879	10·4	3,700 (19%)	9,490 (53%)	333

South Nyasa district, which is unfertile waterless bush with a long history of famine and food shortage, has the highest proportion of labour migrants. Upper Shire, though not fertile, is more prosperous, benefiting from the tobacco- and cotton-growing industries, and from the dried-fish trade.[4]

SOCIAL ORGANIZATION AND POLITICAL STRUCTURE[5]

Kinship and Local Grouping

Among the Yao succession is matrilineal and marriage mainly matrilocal. According to some informants succession formerly passed down the line of brothers, as with the Bemba, but it now passes direct to the eldest sister's eldest son, or to descendants of other sisters in order of seniority.[6] Chiefly succession follows the same rule, but the most senior may be set aside for a more suitable candidate.[7]

Clan names, *fabanga*, are inherited matrilineally, and formerly designated exogamous units,[8] but the marriage prohibition has now ceased to operate. Holders of the same clan name are unable to trace descent from a common ancestress, and for commoners clan names seem to have quite lost their significance; they are, however, carefully remembered in the chiefly lines and in other lines of hereditary rank, such as village headmen.

Within the general kinship grouping of the clan, a smaller group is recognized,

[1] Warner, 1908, p. 121; Macdonald, 1882, vol. i, pp. 20-2, describes a round hut.

[2] 1931 Census information is taken because the district boundaries were changed between 1931 and 1945, so that the information in the 1945 Census would not be compatible of comparison with that given in the 1937 Survey of Male Adult Population in the *Bell Report*, Appendix A.

[3] *Bell Report*, 1938, Appendix A.

[4] Smith, 1937.

[5] Information, unless otherwise stated, is from Mitchell, and refers to south Nyamwezi Yao.

[6] Johnston, 1897, p. 471; Meredith Sanderson, 1912, p. 370. Cf. Macdonald, 1882, vol. i, p. 183, who says that brothers inherit before sister's son.

[7] Ibid., p. 182.

[8] Sanderson, op. 1912, p. 256.

1: Tew E-4 (no date) 1950 FT7 Yao FT7

Ethele (plur. *mathele*), a breast. This includes all who are supposed to be descended 614
from a common ancestress. Often the direct line of descent from the founding 613
ancestress is not known for more than three or four generations. The small groups
which can definitely claim to be 'of one breast' constitute the distinct matrilineal [601]
groups which live together in separate hamlets within a village. Each is undifferentiated
in relation to other matrilineal groups, but internally each is differentiated on the
principle of sibling unity.

The main emphasis of the kinship system is on the bond between a man and his 593
sisters. Their relationship is summed up in the word *mbumbe* (translated by Mitchell
as 'sorority group'). A man speaking of his *mbumbe* refers to all the women he calls 602
sister, their daughters, and their daughters' daughters. Strictly speaking, female kin
in the ascending generations are excluded, as belonging to the *mbumbe* of his mother's
brother. The 'warden' of a sorority group, *anyene mbumbe*, is the senior of the brothers
and is responsible for the behaviour of the women in his charge; he appears for them
in court and pays fines on their account. He plays an important part in the marriage
negotiations. It is his duty to consult the diviner if his sister or her child falls ill, and
to be chief mourner at the funeral of either of them, also providing medicine for the
ritual purification at the end of the mourning period. Formerly these obligations were
balanced by certain rights. He could sell some of them into slavery for his own
personal reasons. This privilege is ended, but even to-day it is through his sorority
group that a man achieves status and independence.

The principle of sibling unity is expressed in many other ways. A man and his 601
sister reciprocally call each other *ahambuanga*. More usually, a woman calls her 602
brother, older or younger than herself, *acimwemi* (a term of respect usually applied to
a chief), for any brother may be regarded as warden of her sorority group. A man has
the same duties to his younger brothers as to his sisters, so they also call him *acimwemi*,
but he calls them *mpuanga* 'younger brother', as they can never be in the position
of warden in relation to him. Maternal uncles are called *ahambuwe*, and a sister's
son *cipwa*.

Within each matrilineal descent group, differentiation takes place between members 602
according to whether they are siblings or not. A man's sorority group included ideally 593
his own siblings and their female matrilineal descendants. His sister's daughters are
also the sorority group of his sister's son, their brother, so that any woman can belong
at any one moment to the sorority groups of her brother, her mother's brother, her
mother's mother's brother, &c., but the effective one is that of her own brother, if
adult. He is consulted first in small disputes, and at the marriage ceremony each party
is represented by a brother as well as by a mother's brother. In the break-up of a
hamlet (described below, p. 12), siblings tend to hold together more closely than
cousins and to form groups of their own, so that each woman in the descent line is a [579]
potential point of cleavage. Tension between brothers as they compete for control of
the sorority group is a source of friction within the sibling group which eventually
leads to its disruption.

Since marriage is mainly matrilocal, and extra-village, the husband in his wife's 591
village is seen as a stranger by all the members of her matrilineal descent group.
There is a tendency for members of such descent groups to live together in a cluster 621
of huts. The word 'hamlet' is used by Mitchell to indicate a cluster of huts, in which 619

1: Tew E-4 (no date) 1950 FT7 Tao FT7

every adult member is a matrilineal descendant of a single ancestress, or a spouse of one of these people. All husbands are called *alomo* by the male members of the descent group, but husbands call each other by the kinship terms for elder and younger brother (i.e. *mkomwa* or *mpwanapa*) according to the seniority of their wives. Similarly undifferentiated in kinship terms are the wives of all men of the descent group, who call each other '*mtoro*'.

The husband is expected to work in his wife's garden, to help his mother-in-law, and also, in the early stages of marriage, to avoid her. His attitude to his father-in-law is one of respect, relaxing as time goes on. His attitude to his wife's brother is also one of respect, which covers feelings of latent hostility. Although husband and wife's brother co-operate in affairs relating to the woman and her children (e.g. they jointly consult the diviner in case of illness, and the brother-in-law hears grievances the husband may have against his wife), there are elements of conflict arising from their competition for the affection of the woman and her children.

Patrilocal marriages are the rule in certain cases. The village headman commonly has his wife in his own village. At his death his widow may return to her own village, but if her daughters have married locally she may stay, and one of her sons, as warden of his sisters, will also stay and marry patrilocally, as did his father, the headman. Thus a new matrilineal descent group, linked to that of the headman by a patrilineal link, develops. In every generation the number of separate but related matrilineal descent groups would double, and at such a rate of proliferation it might be expected that any village would contain many family groups. In fact, however, most members of a village can trace their descent from a common ancestress removed not more than about five generations. There are two reasons for this degree of homogeneity in the kin-grouping in the villages. One is that the villages tend to split up as they become too large and complex. The other is that the introduction of a new matrilineal descent group is often avoided by a cross-cousin marriage by the headman of the village or the warden of a sorority group.

There is a joking-relationship between cross-cousins, that is, for example, between the village headman's children and his sisters' children. The latter, as members of his descent group, have interests and loyalties opposed to those of his own children. Although there is a strong tradition of cross-cousin marriage, such marriages are said to be likely to be unstable.

Betrothal and Marriage

Child betrothal was common among the Yao. Acceptance of a loin-cloth and the wearing of it was taken of betrothal, giving the groom exclusive rights over the girl.* The negotiations for an adult marriage are conducted by senior matrilineal kinsmen of the parties, who at the subsequent ceremony act as witnesses or sureties to the marriage. Usually the senior is the mother's brother, and the junior the brother. The act of validation, the *Chipanse* rite, takes place some time after the husband and wife have been living together. They meet in the hut of the woman for the rite, which consists in eating two pots of porridge, prepared by the female relatives of each party. The man's porridge being a cockerel and the woman's a hen for relish. The exchange of food symbolizes the exchange of members of each matrilineal kin group, which is

* Macdonald, *ibid.*, vol. i, p. 108; Johnston, *ibid.*, pp. 411-13.

1: Tew E-4 (no date) 1950 FT7 Yao FT7

supposed also in the question by the marriage mentors. The couple are exhorted to 585
solve disputes to the mentors, and to consult the diviner in case of sickness.[1] After the
rite these two mentors have special responsibilities towards the couple; grievances
are referred to them; and they must be present when adultery cases are heard in
court. If the marriage witness ceremony has not been performed, the relationship is
not regarded as legal and no adultery compensation can be claimed by the husband.

Divorce used to be a private affair, which was merely signalled by one party giving 586
to the other an arrow as a token of separation.[2] Nowadays all divorce cases go to court.
The woman is usually asked to choose between her husband and the adulterer, and
the compensation paid to the former, if she decides to leave him, is higher—amounting
to about 10s. A man can be sent away from the village by his wife's kin, but if he
has given no grounds for divorce he can claim compensation and will also take back [2/31]
any gifts made to his wife. A few small gifts to his mother-in-law are not reclaimed.
Divorces are easily obtained and frequent. Grounds for the divorce of a man may
include failure to pay hut tax, one of the specific duties of the husband.

The custom of making a marriage payment is recorded by Johnston[3] (on the east 583
coast of Lake Nyasa) as a relatively new adoption. When given it is divided between 197
the bride's father, mother, and mother's brother and brother.[4]

Slavery

Domestic slavery was an important institution in the Yao social system. Slaves were 567
obtained by capture, purchase, or in compensation for injury.[5] A man would pay a
debt by giving slaves (wives or members of his matrilineal kin group) to his creditors.[6]
A man might voluntarily enslave himself to a man having charge of many women, as
a means of obtaining a wife.[7] The children of a free man and a slave woman were not
emancipated, as their father could not take them from the village of their mother's
master, who had the right to sell them.[8] Slaves took part in the ordinary life of the
village; women slaves ranked as junior wives of their masters and shared the usual
work of women. Men might be supplied with guns for hunting or might accompany
their masters to war, trade for them, spin, weave, sew, make baskets.[9] The institution [5/4]
of domestic slavery was an expression of a dominant motif in Yao culture—the association
of status with a large number of dependents. Its abolition by the British was in
itself a major blow to the prestige and authority of the chiefs.

Information about the social organization of the Yao in Portuguese East Africa is 184
scanty, but it is in agreement with what is known of the Nyasaland Yao; Heckel, who 602
knew the Yao in Lindi district, Tanganyika Territory, confirms the correctness of
Stannard's account of the South Nyasa Yao.

The Yao came into Nyasaland in small parties of kinsmen. Their experience and 775
their superior weapons soon enabled them to dominate the Nyanja among whom they
settled, and today they dominate the population of the Southern Province. They are [6/7]
organized into loose groups of villages, under petty, independent chiefs. They seem [8/1]

[1] Stannard, a. 1900, p. 140; Hynde, 1899; Johnston, g. 1902, pp. 69-73; Macdonald, 1882, vol. 2, p. 1[illegible]; Warren, 1908, pp. 109-30.
[2] 1900, pp. 70-3.
[3] Johnston, g. 1902, p. 180.
[4] Stannard, a. 1900, p. 180.
[5] Warren, 1908, pp. 120-3; Stannard, a. 1900, p. 137.
[6] Stannard, 1900, p. 120 (see a reliable source).
[7] Macdonald, 1882, vol. 1, pp. 180-3.
[8] Warren, 1908, p. 123.
[9] Ibid.

1: Tew E-4 (no date) 1950 FT7 Tao FT7

never to have had any large-scale central political organization, and their history is full of occasions when one group of Yao has attacked another. Even within his own area the authority of the chief was not, apparently, sufficiently strong to prevent one village headman from raiding his neighbours; the chief maintained no standing army.[1] The chief held certain rights and privileges. He was entitled to the ground tusk of any elephant found in his territory (the finder was rewarded after it had been sold, with a cloth); he received tribute in food,[2] with which he entertained visitors. He took a share of the spoils of war and was also entitled to annual labour service and to a gift when he made a new burial place. Apart from his military and judicial responsibilities, he had authority to settle when and where initiation ceremonies should be held.[3] The right to hold these ceremonies was sought after by the village headmen as a mark of status.[4] The chiefs or headmen of certain families had the right to wear a white cloth bound round their temples as insignia of rank.[5]

In addition the chief had a certain ritual status. He was thought to incur mystical danger by contact with death, and so was not allowed to attend a funeral nor to eat a chicken brought by a messenger announcing a death, nor to accompany his military expeditions. He was supposed to have great power through special medicines. He had to make offerings to the ancestors, especially in affairs concerning the whole people, such as drought or epidemic. He was expected to give a burial cloth at the death of an important man. At his death a period of social disorganization was recognized, members of his village were allowed to pillage and rape, until he was buried.

Succession to the chiefly office was matrilineal. The chief's position was based partly on his status as the senior male of his own matrilineal kin group, partly on his wealth. His command over slaves, guns, and currency to the coast was greater than that of others, and from these his military strength was derived, for a chief was powerless without his following of dependants. The chief of the area was also headman of his own village. In fact, the position and duties of a village headman (except that he could not exact tribute)[6] reproduced in small scale those of the chief. The headmen also were in mystical danger through contact with death and were the channel through which the ancestors were approached in affairs concerning the village. They, too, built up their prestige and wealth by slaving activities. They seem to have been largely independent of the chief, carrying on slave raids of their own, and if they could gain a sufficient following, they might break away from the chief, and set up their own chieftaincy.[7]

The chief ruled through a hierarchy of headmen. His councillors were superior headmen, placed over a number of village headmen. Commoners could approach the chief only through the councillor in whose area their village belonged. The councillor's special duties were to report daily to the chief on the affairs of his district, to advise, and to arbitrate in the chief's own domestic affairs, e.g. in conflicts between the chief and his brothers and nephews. The councillors were not necessarily relatives of the chief,[8] but were always *ex officiis* of their general status in the community, and their

[1] Ebanks, a, 1890, p. 109, says of the Yao in the Shire highlands: 'Every tribe was one over which he set down as a chief . . . petty quarrels of petty chiefs were abundant . . .' See Macdonald, 1889, vol. i, pp. 189 and 190. [2] Bateman, a, 1901, says that only hens was owed to him.
[3] Ibid., p. 190. [4] Duff, 1909, p. 310.
[5] Macdonald, 1889, vol. i, p. 18; Weeks, 1908, p. 180. [6] Macdonald, 1889, vol. i, p. 190.
[7] Ibid., pp. 30 and 198. [8] Ibid., p. 198.

1: Tew E-4 (no date) 1950 F37 Yao F37

office tended to become hereditary. Each councillor had his own village which he administered as a headman. A second set of officials were the court assessors, *mapungu*, who, unlike the councillors, were not in charge of villages of their own in addition to their court duties. Their office was not hereditary and they were chosen for their wisdom and their debating ability. They lived at the court of the chief and their main duty was to sift the evidence in the judicial cases which came before him. 634 [692]

The village headmen were expected to send elephant tusks to the chief (receiving small gifts in return), and to invite him to a yearly beer drink. Like the chief, the village headman governed through a council of the most important men in his village. They constituted a kind of village court over which he presided, and in the old days he could give capital sentence, or award a fine of as many as four slaves. Appeal from his decision lay to the court of the superior headman, or to the chief. Important cases would be reported direct to the chief. Most crimes would be settled by compensation. In cases of murder, several slaves were paid to the kin of the victim, and a fine for spilling blood to the chief. When compensation was handed over, the recipient always returned some part of it as sign that friendship was restored.[1] [651] 631 692

Macdonald's further account of the treatment of crime shows how weak was the political organization, in spite of the apparent orderliness of the system of inferior and superior courts. A murderer caught red-handed might be killed at once. If captured alive he might be ransomed on payment of a fine of from four to twenty slaves, some of whom might be killed to accompany the dead. If the murderer escaped a relative of his would be captured and ransomed. This applied to murders occurring among parties friendly to one another and living in the same village. If the murderer was from another village, the injured village, if strong enough, would fall upon the other and kill and enslave the inhabitants. If not strong enough, the chief might be called in to help to mulcting the guilty village.[2] 696 [547]

Modern Administration

In the whole of Nyasaland there must be between thirty and forty Yao chiefs. In the districts of Liwonde, Fort Johnston, and Zomba, where 60 per cent. of the Yao population is concentrated (1931 boundaries), there are at least fifteen such chiefs. Not all those who have the rank of chief in the old Yao system are recognized as Native Authorities or even as Sub-Native Authorities by the Nyasaland Administration, and many Sub-Native Authorities would be full chiefs in the Yao system, and quite independent of the Native Authorities under whom they are placed. 634 622 778

Nowadays the chief has lost many of his former claims to status. He no longer has monopoly of the trade to the coast, for goods are brought in by Indian traders and bought by African tobacco growers or returned labour migrants. He can no longer use his slaves to increase his wealth by running slaving expeditions. His tribute of food and ivory has ceased, and he can no longer entertain lavishly, but he is still expected to give burial cloths and to make gifts to headmen on their succession to office. Some of his councillors have been made court assessors, and are paid for these duties, but others are expected to work for him unpaid. Some chiefs do reward councillors who retain their traditional status but are not officially recognized as assessors by the

[1] Macdonald, *Africa*, vol. i, pp. 136-8; Swanson, *o. cit.*, p. 179.
[2] Macdonald, *op. cit.*, pp. 139-41.

1: Tew E-4 (no date) 1950 FT7 Yao FT7

Administration, but many cannot afford to do this. The people regard the taxes they pay to the Administration as a substitute for the chief's tribute. As the Native Authority the chief appears to be responsible for tax-collection, as the tax-clerk lives at the court.

The chief is responsible to the Administration, among other things, for latrine construction and for punishing the infringement of various regulations. His main duties are judicial, as judge of the Native Authority Court. The bureaucracy attached to the Native Authority includes a number of functionaries, e.g. Kawinga's, in 1947 one of the larger courts, had 1 court clerk, 1 assistant court clerk, 1 community worker, 1 forest guard, 1 agricultural demonstrator, 1 sanitary inspector, 9 court messengers, 2 caretakers, 4 gaoleta men, 1 market clerk, 1 market sweeper, 6 court assessors. These are paid by the Native Treasury. Court assessors help in the arbitration of cases. The key position at court is held by the court clerk, and usually he is not a Yao, but an Ngoni, who, because he is literate, is the medium of all written communications to and from the chief. The court sergeant is the correct channel of approach to the chief, and the court messengers represent the chief to the villages.

The territory of a Native Authority is divided into 'administrative villages', under officially recognized and paid headmen. Within these areas there are clusters of huts, which do not form officially recognized administrative units, but which are none the less villages under their own hereditary headmen. The administrative village headman is responsible for the payment of taxes in his area, and for the observance of various regulations. He is usually a man with some standing in the Yao social system: one who has the right to conduct a boys' initiation ceremony, or to wear the head-band signifying rank. His authority is derived partly from his status as a senior kinsman, partly from his status as a village headman. If the administrative village under him includes a number of hamlets unrelated to the administrative village headman, he will delegate his responsibilities in these hamlets to their own headmen. Consequently, since village headmen perform administrative duties, whether they are officially recognized or not, there is competition among them for the official posts. In order to bring pressure to bear on the chief to make him concede marks of rank, they may threaten to move out of his area, and so to deplete his following. In spite of this bargaining tool, the position of the village headman *vis-à-vis* the chief is said to be getting progressively weaker. Cases once tried by them are now being taken to the chief's court, and the latter is able to draw on the power of the Administration to establish his dominance over the headmen.

The chief in the modern system stands as the representative of the people to the white Administration, and as the representative of the white Administration to the people. One reason for the lack of direct contact between the Administration and the people is the fact that Yao is not the official language of the district, and therefore Yao interpreters are necessary.

There are some occasions when the chief and his officials perform the functions proper to their office under the old social system. The white Administration is not concerned with their ritual functions, nor with initiation rites, nor does it take cognizance of witchcraft offences. Accusations of witchcraft are judged by the same procedure as accusations of theft or adultery, but they are not dealt with in the court house, nor recorded in the book.

1: Tew E-4 (no date) 1950 FT7 Yao FT7

LAND TENURE

The rules governing land tenure were those which would be expected of a society which suffered from no land shortage. A man was entitled to as much land as he could cultivate, the limitation being that he should consult the headman as to his neighbours' boundaries. Abandoned gardens could only be taken up with the permission of the original cultivator.[1] 423

MAIN CULTURAL FEATURES

RELIGION

The Yao are largely Islamized. Codrington remarked that the perpetuation of this faith was distinctly antagonistic to British influence, and it received considerable attention from chiefs and headmen. Schools for the instruction of youth in reading and writing Swahili in Arabic characters were established in nearly every village, where also prayers were made at regular intervals in the day. The Moslem fasts and feasts were also observed, and the Yao were not inclined to embrace Christianity.[2] Their conversion to Islam did not take place till the nineteenth century, long after their first introduction to the Arab traders at Kilwa and Zanzibar, although they had adopted Swahili modes of dress much earlier.[3] 771 777

According to Hetherwick, Islam is strongest on the lake shore and on the east border of Nyasaland, chiefly round the old slave-trade centres. Makanjira's on the south-east side of the lake, and Domira Bay on the west, were the centres of Moslem propaganda. The Moslem population around Zomba and Blantyre consists mainly of Yao men, who have built themselves mosques in their own villages, or use the large mosques of Indian Moslem merchants. In the west districts, lower Shire, Ruo, central Shire, Likangwe, Fort Manning, the Moslem population does not total more than 732. In the districts round Fort Johnston and Kotakota, the Moslems are one-ninth of the total population, while in Zomba district they number one-fifth.[4]

The Yao pagan religion was a form of ancestor worship. Apart from diviners and medicine men, there was no regular priestly profession. Intercession with the ancestors was performed by the chief, on behalf of the chiefdom, by the headman on behalf of the village, and by the head of the matrilineal kin for his dependents.[5] A man was qualified to approach his ancestors individually only if he had been initiated and had a house of his own.[6] 771 769

Some of the ritual duties of the chief have already been mentioned. When his people were visited by drought or epidemic, or when he fixed the day for the beginning of the millet harvest, he made an offering of flour and of beer poured into a pot in the ground at the grave of a dead chief. The village headman made similar offerings to the spirit of his dead predecessor. The spirits of the dead Nyanja chiefs, ousted by the Yao invasion, were regarded as still powerful in the homeland of their people. For instance, Kangombo, whose shrine was on Mount Soche, used to be appealed to for rain, and on the principle that the most appropriate mediator between a dead man and the living is a descendant of the former, the Yao chief, Kapeni, when he wished to propitiate 771 631 622 775 782

[1] Macdonald, 1882, vol. i, pp. 177-9; Sanderson, n. 1913, p. 280.
[2] Codrington, 1898, p. 328; see also Maples, n. 1893.
[3] Young, T. C., n. 1932, p. 37.
[4] Hetherwick, n. 1905, p. 105.
[5] Warren, 1908, p. 270; Sanderson, n. 1922, p. 302.
[6] Macdonald, 1882, vol. i, p. 63.

1: Tew . E-4 (no date) 1950 FT7 Yao FT7

Kangomba, used to persuade Nyanja to help in the sacrificial rite. When Kapeni in turn fled to Mount Soche from the Ngoni, and died there, the Yao addressed their offerings to him, not to Kangomba.[1] The word *Mulungu* has sometimes been interpreted to mean Supreme Being, God, Creator, but among the Yao it seems not to have a personal connotation. It was used to describe the agent in any mysterious event,[2] or the place where the ancestor spirits (*mazuka*) were supposed to dwell. Daily life was full of acts of respect towards the ancestors, who were regarded as jealous of the living, and requiring constant propitiation.[3]

Sorcery

Accusations of witchcraft and measures for dealing with it play a dominant role in Yao social life. With certain exceptions nearly all diseases and deaths are thought to be caused by sorcery. The exceptional causes are: the hand of God, old age, the transgression of certain taboos, and battle wounds. If sorcery is suspected the relatives of the sick or dead man consult the diviner to identify the offender.

Yao (in common with the Mazwi and many peoples of Central Africa) believe that sorcerers have a craving for human flesh, which they satisfy by killing with magic the victims of their malice and hatred. They acquire their magical powers by an apprenticeship, which might include incestuous relations with mother, sister, or mother-in-law, or sleeping on the grave of the mother for one night. The sorcerer then learns the medicines and finally demonstrates his power by killing a young relative by magic; he waits till the victim is buried, and then magically exhumes him for the secret feast with his fellow sorcerers. Each sorcerer who shares the flesh owes a debt to the one who secured the victim.

Charms are used as preventive measures against sorcery. When a diviner has diagnosed the cause of death as sorcery, retaliatory measures are taken. The headman of the village could either call in the witchfinder to identify the offender or he could call in the diviner to take action against all the sorcerers in the village. After the diviner, *Mahinduka*, had revealed the guilty ones, they were challenged to take the poison ordeal to prove their innocence. If they died, the proof and the punishment were simultaneously accomplished. If they survived, the diviner was held to have been at fault and they were acquitted. The witch doctor was supposed to entice sorcerers to the graveside, and slay them with magic more powerful than their own.

The diviner's findings are to-day checked by the poison ordeal administered to a chicken. A sorcerer detected in this way might be asked to provide medicine for the man whose sickness he had caused, or after a death he might be compelled to pay compensation. If the accused is a village headman, he will not be summoned before a chief, but his brother will take the villagers away from the sphere of his influence, or he may be chased away from the district. Accusations of sorcery follow certain regular lines. Nearly all accusations fall on relatives. Diviners are consulted by matrilineal relatives of the sick or dead person, and the man most usually accused is the brother of the sorcerer, or the husband of his sister. Witchcraft is therefore a manner of expressing the hostilities latent in these relations, which are, in the Yao social system, full of tensions.

[1] Macdonald, 1882, vol. i, p. 70.
[2] Hetherwick, 3, 1900.
[3] Hetherwick, 1902, pp. 14-15; Macdonald, 1882, vol. i, pp. 58-73, 204-13.

1: Tew E-4 (no date) 1950 FT7 Yao FT7

Birth

Birth takes place in the bush, some distance from the hamlet, in the presence of female relatives of the woman and of her husband. If the child is stillborn, or miscarried, it is buried in the bush. The husband and wife must abstain from sexual intercourse for some months, until a special ritual intercourse is performed. A man who breaks this taboo is liable to contract a fatal disease, *kwanaga*. Difficult births are attributed to: (*a*) a curse spoken by a matrilineal relative—this is made effective by the intervention of the ancestors, and to remove it it is necessary to perform a rite making clear that no malice is borne; (*b*) the adultery of the woman or her husband, in which case confession will save the woman from dying; and (*c*) sorcery. 844 [845] 845

If a child is born alive it is brought to the hut of the mother or one of her female relatives, where it is secluded until its naming ceremony, about six days later. Only after the naming is the child considered to be a member of society. A second child should not be born while the first is still suckling, i.e. for about two years. When the child is about four or five months old it is ritually immunized against the dangers of sexual activity, and the parents may resume relations. Elaborate magical precautions are taken to ensure the child's survival. Children sleep with their mother, the boys until they are old enough to go to the boys' dormitory, and the girls until marriage.[1] 844 852 [613]

Initiation

The yearly initiation ceremonies, *unyago*, are the principal cultural institution of the Yao. That for the boys, *lupanda*, is the most important, and may only take place under a chief or superior village headman, whereas a girls' initiation ceremony may take place under an ordinary headman. The right to hold a boys' initiation ceremony therefore becomes a mark of status which is jealously disputed.[2] The right is expressed as 'having a *ciwala*'. A *ciwala* is the small basket in which the special sacrificial flour is carried. 881 852 [554]

Yao carry out initiation between the ages of seven and eleven, whereas generally in East Africa it is postponed until puberty.[3] In response to requests from the headmen the chief appoints the time and place of the boys' initiation ceremony for a group of villages. It is held at the end of the dry season, before the bush is burned. Each initiate is accompanied by a sponsor, *akamwi*, who may be a brother, uncle, or friend. Before they set out for the place appointed to be *lupanda*, they all assemble before the chief to be anointed with millet-flour specially prepared by his head wife. The word *lupanda* refers to a forked stick over which the sacrificial flour is poured. This stick is planted at the place of assembly, the *masakwa*. The boys, their sponsors, and the master of ceremonies, *m'mirira*, are accompanied with dancing as far as *masakwa* by their friends. The next day the initiates go to a spot in the bush, where the circumcision (formerly only an incision) is performed, and remain in the bush school, *nkopola*, for about two months, until the wounds are completely healed. The Yao circumcision rite is said not to have been introduced by the Arabs.[4]

During these weeks the boys are subjected to rigorous discipline and instructed in various skills and tribal lore. They sleep in long dormitory huts, with partitions dividing the boys of different villages from each other. The chief appoints the day for

[1] Warren, 1908, pp. 102-3.
[2] Stannus and Dewey, 1913, p. 110.
[3] Duff, 1913, p. 110.
[4] Livingstone, 1874, p. 81.

1: Tew E-4 (no date) 1950 FT7 Yao FT7

return to the *lipande*, where the initiates are welcomed by their friends. An essential part of the ceremony which takes place at this stage is the exhibition of animal shapes made by the *n'mizwa*, with mounds of earth outlined in flour. These animal shapes differ from lodge to lodge. On the last night before the return to the village the initiates undergo a ceremonial bathing, each boy being carried to the stream by a woman, who thereafter is addressed as 'elder sister'. Finally, with new names, and freshly oiled and decorated, they march to the chief's village to be redeemed by him from the *n'mizwa* with gifts of cloth. After initiation it is a deadly insult to call a boy by his child-name. All who pass through initiation together consider themselves bound by mutual obligations of hospitality.[1]

Girls' initiation takes place in three stages. First, there is *cipwite*, the general initiation before puberty, which corresponds to the boys' *lipande*. It takes place at the same time of year, and though it lasts for less than a week, its conclusion is celebrated at *lipande* jointly with the conclusion of the boys' initiation. A hut is built in the bush, like the long dormitory of the boys, and four days are spent in dancing and singing. Each girl (aged about eight years) is accompanied by a sponsor, a woman friend who continues to be her mentor during subsequent rites, and who assists in giving the girl instruction in her womanly duties. At the end the girls are bathed and anointed, dressed in new clothes, and each is carried to *lipande* by her sponsor. Here they prove their skill in dancing and receive gifts from their friends. Ritual defloration follows the *cipwite* initiation.[2] Among Mohammedans, circumcisement used to be performed by a woman operator, but, it is said, was discontinued in about 1923 on account of the heavy mortality.[3]

After this first general celebration, first pregnancy and first birth are the occasions of separate rites for each girl. According to some informants there were once two ceremonies connected with pregnancy. One, for the young married man whose wives had not yet conceived, used to take place at the same time as *cip'ta*; each man was attended by a woman sponsor not his wife, given good advice, and put through various tests of manhood. Mitchell does not confirm the present existence of this ceremony, but in the old days if a man was betrothed or married to a child going through her *cipwite* he had to accompany her.

The *ktimo* ceremony takes place when a young married woman quickens with child for the first time.[4] The woman, with her sponsor and the married women of the neighbourhood, went out in procession for a ceremony of singing and dancing and instruction to the young couple, followed by a feast. Nowadays no men are allowed to attend *ktimo*. A child born of a woman who had not undergone this rite used to be buried alive; nowadays her anyone *mbumba* is charged by the chief.

Finally, six days after the first child is born, its naming ceremony forms a last initiation rite for its mother. The husband is formally led into her hut by her sponsor and the married women of the neighbourhood, and the child is taken out for the first time to the accompaniment of feasting and dancing.

Most Yao men and women act as sponsors of initiates at least once, and all parti-

[1] Sources for boys' initiation: Stannus and Davey, 1913; Weston, 1908, pp. 109-11; Stannus, n. 1910, pp. 197-83; Mitchell, 1939, pp. 19 sq.; Johnston, 1897, p. 409; Wendt, c. 1929, p. 370.
[2] Stannus, n. 1910, p. 199. [3] Mitchell, c. 1939, p. 198.
[4] Mitchell, n. 1939, p. 200; Mitchell, 1939, p. 19, calls it *ulumbo* (Sulu).

1: Tew E-4 (no date) 1950 FT7 Yao FT7

dipate yearly in the great initiation festival for boys and girls. Consequently as they 881
repeat each year the lessons of their own initiation, the ceremonies are the main 852
vehicle of Yao culture.*

There are also two Moslem ceremonies:

(i) *Jando*, the boys' Moslem baptism, which takes about seven days, and is usually 881
worked in with *Ngondo*: 852

(ii) *Mwali*, the girls' Moslem baptism, which is the same as *jando*, 177
but usually quite separate from *ngondo*. It is important that the wife of a Moslem should have her *mwali* so that she knows how to prepare the food properly at Ramadan.

Menstruation and Other Taboos

Menstruation is held to be dangerous. A special mat is used by the women during 641
this time, and is rolled up and kept during the rest of the cycle. The hut is completely 834
cleansed after menstruation. Intercourse during menses leads to disease of the man. Sexual contact is dangerous to persons at certain other periods: during initiation ceremonies, during mourning, and for babies who have not been through the protective rite. The danger is thought to lie in *ndoba*, a dread disease characterized by swelling. This may be transmitted by salt in the food. Deaths are often attributed to 'salt'. Much of the significance of the mourning is that medicines are prepared which protect the mourners against the dangers attendant on sexual activity.

Burial Rites

764

News of a death must be sent to the chief by a messenger carrying a single fowl. [203]
The chief gives a present of calico for wrapping the body, and a goat for the burial [193]
rite. There are called *anchi*, neighbours unrelated to the dead, who volunteer for certain duties. They prepare the body for burial and carry it in procession to the graveyard outside the village. No uninitiated person is allowed to see the funeral. All who attend the burial are prohibited from sexual intercourse for one month. After this time the prohibition is lifted by a ceremony of beer drinking and feasting, and on the following day all fires in the village are extinguished, and clean ash, and the mourners are shaved. A year later beer is brewed for a final ceremony.

For a period after her husband's death a widow is unclean, and has to be purified 768
by ritual intercourse with a man who is paid. The widow is yet allowed to remarry 58
for two or three years. A widower leaves his wife's village, after receiving a parting gift. The widower *of ordinary parentage and not hereditary chief*, if a man has himself a 'name' [581]
(rank and social position), he has an heir, who inherits also the wives of his predecessor. But if the heir (the sororal nephew) has married a cross-cousin (mother's brother's daughter) he would not consider the wife's mother as his inherited wife.

Before the burial the dead man's hut used to be destroyed, together with his possessions. Immediately afterwards a consultation is held as to whether retaliatory action against sorcerers is called for. The *anchi*'s duties include not only the conducting of the burial, but also the subsequent inquiry and the conduct of the second ceremony, the beer drinking, at which they shave the mourners. A man who has 764
769

* Male circumcision for girls' initiation (Shaduf, [illegible]); Gomes, [illegible]; [illegible] (Chinsungwi Chewa, [illegible]); Duff, [illegible]; [illegible], [illegible]; Macdonald, [illegible]; Wilson, [illegible]; Johnston, [illegible].

1: Tew E-4 (no date) 1950 FT7 Yao FT7

764 performed these services used to enter a special relationship of privileged familiarity with
767 the village of the dead. This has died out in Nyasaland, but accounts of *Utasi*[1] among the Yao at Masasi and Songea suggest that something of the kind is still practised.

Chiefs and headmen are not buried outside the village, as are other persons. They
774 used to be buried before their own huts, but now in the centre of the village. Shrines were raised over their graves, at which offerings of beer and flour were made. If the village was moved the pot of beer sunk into the ground at the chief's grave was also removed and reinstated at the new site. A dead slave was buried by his fellow slaves; normal rights of sepulture were denied to suicides and to persons who had died in taking the poison ordeal (that is, convicted sorcerers).[2]

OTHER DISTINCTIVE CULTURAL FEATURES

301 The Yao have a tribal mark of two short cuts on each side of the face between the
304 eye and the ear.[3] Their women did not wear the *pelele*, lip-ring, although their neighbours the Makua and Makonde did;[4] the fashion seems to have spread to south Nyasa
[171] in the 1880's, as many travellers commented on it, without distinguishing whether the wearers were Yao, Nyanja, or Lomwe.[5] The women used to pierce the left *ala nasi* and insert a metal or lead stud, *cipini*.[6]

MAKUA-LOMWE

TRIBAL AND SUB-TRIBAL GROUPINGS AND DEMOGRAPHY

Nomenclature

The *Ma-* in *Makua* is not a prefix, but part of the name. Variant spellings are *Makua*, *Makua*, *Mahoane*. They are sometimes referred to by the name of one subdivision, the *Mahu Makua*, and called *Amatu ou Matu*.[7]

The *Lomwe* (also spelt *Lomwe*) are called *Alolo* by the Yao, and are also frequently called *Angoni* (*Ngoni*) which is an old name for the people of the region.[8] Any of the Makua-Lomwe peoples who have migrated into south Nyasaland are collectively termed *Ngoni* in official reports; Ngoni is a hill in the region of Portuguese East Africa, whence they come, but they should not be confused with the Ngoni of Tanganyika.[9] Another name for them is *Acilowe*.[10] *Alolo* is incorrectly applied to all the Lomwe; it has a stricter application to the Cuabo from Quilimane.

[1] Rattray, 1927; Mitsuno, 1921; Spire, 1923.
[2] Main sources for burial are: Johnston, p. 1902, pp. 28–30; Swann, c. 1902, pp. 240–6; Abdullah, 1924, pp. 19–21; Duff, 1903, pp. 320–1; Macdonald, 1882, vol. i, pp. 210–12.
[3] Murray, 1932, p. 173.
[4] Thompson, 1880, pp. 37–8, writing of the Yao of the Ruvuma valley.
[5] Macdonald, 1882, vol. i, pp. 26–27; 'around Blantyre hardly any woman is without it'.
[6] Swann, c. 1902, p. 326.
[7] *Handbook of Portuguese Nyasaland*, 1921, p. 30; Murray, 1922, p. 56; Weule, c. 1909, p. 129; Livingstone, 1874, p. 32.
[8] Thomson, 1890, pp. 272–77; Gaspar Bocarro passed through Mangoche country. Burton, 1873 (Lacerda's journey, 1798), mentions Mangoche.
[9] Abraham, 1921, p. 13; Murray, 1922, p. 56.
[10] Johnston, W. P., c. 1894.

2: Mitchell E-5 (1946-1949) 1956 FT7 Yao FT7

THE YAO VILLAGE

A STUDY IN THE SOCIAL STRUCTURE OF A NYASALAND TRIBE

by

J. CLYDE MITCHELL

Professor of African Studies at the University College of Rhodesia and Nyasaland. Sometime Director of the Rhodes-Livingstone Institute. Simon Research Fellow at the University of Manchester, 1952-53

[title page]

Published on behalf of

THE RHODES-LIVINGSTONE INSTITUTE

NORTHERN RHODESIA, by

MANCHESTER UNIVERSITY PRESS

2: Mitchell E-5 (1946-1949) 1956 FT7 Yao FT7

THE YAO VILLAGE

800

[p.i, p.ii is blank]

2: Mitchell E-5 (1946-1949) 1956 FT7 Yao FT7

142
291
301
751
643

Frontispiece

PLATE I

CHIEF KAWINGA THE SIXTH

He wears the traditional necklace of 'horn' charms which are medicated to protect him from the bullets of his enemies.

[facing p. iii]

2: Mitchell E-5 (1946-1949) 1956 FT7 Yao FT7

THE YAO VILLAGE

A STUDY IN THE SOCIAL STRUCTURE OF A NYASALAND TRIBE

by

J. CLYDE MITCHELL

Professor of African Studies at the University College of Rhodesia and Nyasaland. Sometime Director of the Rhodes-Livingstone Institute. Simon Research Fellow at the University of Manchester, 1950-53

Published on behalf of

THE RHODES-LIVINGSTONE INSTITUTE

NORTHERN RHODESIA, *by*

MANCHESTER UNIVERSITY PRESS

[£ 21]

2: Mitchell E-5 (1946-1949) 1956 FT7 Yao FT7

Published by the University of Manchester
at The University Press
316-324, Oxford Road, Manchester 13.

1956

Nkd 88
Y2
956M

[p. iv]

2: Mitchell E-5 (1946-1949) 1956 FT7 Yao FT7

This book is dedicated
to my
FATHER
and
the memory of
my
MOTHER

[p. v]
[p. vi is blank]

2: Mitchell E-5 (1946-1949) 1956 FT7 Yao FT7

PREFACE

THIS book is the fruit of field work from September 1946 to September 1947, and from September 1948 to June 1949, as a Research Officer of the Rhodes-Livingstone Institute, among the Yao of Southern Nyasaland. Between June and September 1949 I was employed by the Nyasaland Government on a survey of the Domasi District where a Development Scheme was to be inaugurated. The detailed results of the Domasi survey have already been published separately,[1] and the general results have been incorporated here by permission of the Nyasaland Government.

By the very nature of his work a sociologist must depend heavily on others for help. As with all sociologists my greatest indebtedness is to the people amongst whom I worked. Here I must mention in particular Chiefs Kawinga and Chiwalo, and Village Headmen Cigwaja and Kapalama, whose hospitality in one way and another helped me appreciably. I also thank Rajabu Kampulula, who was my clerk and main informant during the second field trip.

I am grateful to the Nyasaland Government for assistance in many ways, and to several officers of the Administration for their kindness and hospitality to me. In particular, Mr. E. C. Burton, then Provincial Commissioner in Blantyre, encouraged me by his interest in my research. Mr. Martin Lewis and Mr. R. P. Livingston, successive District Commissioners at Zomba, by their sympathetic understanding of the role of an anthropologist, and their hospitality in Zomba and Blantyre, did much to make field work less of a burden than it might have been. The hospitality of Mr. Richard Leach and Mr. H. Gardner, then of the Agricultural Department, and of Mr. E. Hemmings of the Native Tobacco Board, also eased the discomforts of field life.

To my teachers and colleagues I owe a special word of thanks. I would like to acknowledge here my debt to two of my teachers at the Natal University College who, during my undergraduate

[1] "An Outline of the Social Structure of Malonia Area", *The Nyasaland Journal*, iv, 2 (July 1951), 19-48.

2: Mitchell E-5 (1946-1949) 1956 FT7 Yao FT7

days, imbued me with enthusiasm for scientific research. Dr. P. de Vos's lectures on social theory, particularly on the teachings of Simmel and von Wiese, stood me in good stead when I came into contact with Professor Radcliffe-Brown's ideas in the study of non-literate societies. Dr. H. Cobland gave me my first introduction to statistical methods: his influence on my interests is immediately apparent.

Early in 1946, when I first took up my appointment with the Rhodes-Livingstone Institute, I went with Dr. Max Gluckman, then Director of the Institute, Mr. J. A. Barnes, also newly appointed to the staff of the Rhodes-Livingstone Institute, and Mr. Max Marwick, a Colonial Social Science Research Fellow, on a field-training trip to the Lamba people in Northern Rhodesia. I owe much to that short trip, and to the period of training that followed it at the University of Cape Town. Dr. Elizabeth Colson, who joined us at Cape Town, Barnes and myself, under the direction of Gluckman, formed the first research team of the Rhodes-Livingstone Institute. It was in Lambaland and Cape Town that we worked out our common approach to field problems. While we were at Cape Town we were under the tutelage of Professor I. Schapera. I acknowledge gratefully his guidance, and also his insistence on a high standard of scientific scholarship, both in commenting on work done at Cape Town and later in meticulous reading of the manuscript of this book.

Max Marwick went to make a study of the Cewa people in eastern Northern Rhodesia, who are culturally and sociologically similar to the Yao. In many discussions with him, particularly on the subject of sorcery and witchcraft beliefs, I have been greatly stimulated.

After my first field trip the Trustees of the Institute decided to send Colson, Barnes and myself for our initial period of writing-up to Oxford where Dr. Gluckman had become a lecturer. There I came under the influence of Professor E. E. Evans-Pritchard and Dr. M. Fortes, who contributed considerably to my training.

Throughout my study of the Yao, in the field and in analysis, I have been supported in every way by the Rhodes-Livingstone Institute and its staff. Not only did the Institute provide the finances for academic and disinterested research, but it also created the framework in which a group of sociologists, of

2: Mitchell E-5 (1946-1949) 1956 FT7 Yao FT7

divergent interests and background, could work on common problems. Each was able to present his own particular viewpoint, but all were stimulated to adopt a common frame of reference. In this sense the book is as much my colleagues' as it is my own. Barnes, Colson (who later became Director of the Institute), and later Dr. Ian Cunnison, have consistently worked on the material I have submitted to them, individually and in conference, in Central Africa, at Cape Town, at Oxford, and finally at Manchester. I would like to record my special gratitude to Max Gluckman, who was not only my Director in the Institute but also my supervisor at Oxford. To him I owe more than to any other of my colleagues. I would like to say in appreciation that both Max Gluckman and Elizabeth Colson, as successive Directors of the Rhodes-Livingstone Institute, have always given me complete freedom in the conduct of my research and have only given me 'direction' when I asked for it.

I am glad also to record my appreciation to the Trustees of the Rhodes-Livingstone Institute, and particularly to His Excellency Sir John Waddington who was their President when I was in Nyasaland, for the freedom they allowed me in my work, and for their beneficence in allowing me to come to the United Kingdom in 1947 and again in 1949 where most of my writing has been done.

I am grateful to Mrs. U. K. Stevenson who has read the draft and to Mr. T. Baxter for help with the bibliography.

Lastly, I thank my wife, who not only shared with me the difficulties and frustrations of life in the field, but who has always encouraged me at times when I thought that this book would never be finished. She has in fact had the major share in its preparation.

J. C. M.

[p. x is blank]

2: Mitchell E-5 (1946-1949) 1956 FT7 Yao FT7

CONTENTS

	PAGE
PREFACE	vii
CHAPTER	
I. THE PROBLEM IN ITS ECOLOGICAL SETTING	1
The Problem	1
The Field Work	4
Topography and Surface Water	8
Climate	10
Vegetation	11
Population	11
Historical Background to the Modern Economic Situation	17
Modern Economic Structure	20
II. THE HISTORICAL BACKGROUND TO THE MODERN SITUATION	22
Before the Whites came	22
Episode I: The Scattering of the Tribes from the Yao Hill	24
Episode II: The Displacement of the Divisions from their Homes	24
The Entry of the Missionaries	26
The Establishment of British Rule	28
The Village as a Unit in pre-White Times	31
The Chief and the Village Headmen: the Political Process	33
The Effects of White Conquest	37
The Modern Administrative Structure	44
III. THE CONTINUITY OF MODERN CHANGES	46
Chiefdoms in the Administrative Model	46
The Position of the Modern Chief	50
The Chief as a Symbol of Unity	54
The Chief's Judicial Functions	55
The Chief as his People's Representative	57
The Origin of Villages in Modern Chiefdoms	58
The Principle of Primary	62
The Characteristics of the Three Categories of Headmen	65

2: Mitchell E-5 (1946-1949) 1956 FT7 Yao FT7

CHAPTER PAGE

Kinship with the Chief 68
Clanship with the Chief 71
Unrelated Headmen 74

IV. PRESTIGE AND RANK AMONG THE VILLAGE HEADMEN . . . 76
The Political Process as the Struggle of Headmen for Rank 76
Marks of Rank 77
The Struggle for Government Recognition 83
The Significance of the Senior Headland 91
The Struggle for Initiation Rights 97
The Political Process as a Struggle of Headmen against the Chief 107

V. THE VILLAGE HEADMAN 110
Villages as Discrete Units 110
The Burdens and Rewards of Headmanship 113
The Headman's Installation Ceremony 114
The Structural Reincarnation of Village Headmen and Perpetual Relationships 121
The Role of the Chief in Headman's Installation Ceremonies 123
The Value Attached to the United Village 124
Effects of the Headman's Personality 126
The Headman as a Representative of a Corporate Group . 128

VI. THE LINEAGE PRINCIPLE IN VILLAGE 131
Matrilineal Kinship 131
The Matrilineage 133
The Concept of "The Mother" 134
The Unity of the Matrilineage 136
The Localized Matrilineage 140
The Conflict of Male Authority and Uxorilocality . . 143
The Sorority-group (ubumbe) 145
Segmentation and Fission in the Matrilineage . . . 150
Inter-lineage Tension and Succession Dispute . . . 157
Patronity and Segmentation 163
The Spatial Representation of Lineage Segmentation . . 164
The Segmentary Process 165
The Opposition of the Generations 173

2: Mitchell E-5 (1946-1949) 1956 FT7 Yao FT7

Contents

CHAPTER	PAGE
VII. THE PATRILATERALLY-LINKED GROUPS	183
The Position of the Husband and Father	183
The Development of the Corporate Identity of Patrilaterally-linked Groups	187
The Headman as the Link between the Dominant Lineage and the Patrilaterally-linked Groups	193
Patrilaterally-linked Groups as the Legacy of Slavery	195
Cross-cousin and Other Kinds of Inter-village Marriages	197
Other Types of Village Structure	204
VIII. THE VILLAGE TRADITIONAL TIME	209
APPENDICES	215
A. Economic Data	215
B. Genealogy, Hut Counts and Village Plan of Ali Kawaba Village	217
C. Skidemu Genealogy, Hut Counts and Village Plan of Mmii Section of Majaja Village	218
D. Genealogy, Hut Counts and Village Plan of Chinja Village	220
The three genealogies have been inserted as folding plans at the end of the book.	
BIBLIOGRAPHY	224
INDEX	228

2: Mitchell E-5 (1946-1949) 1956 FT7 Tao FT7

LIST OF PLATES

I. Chief Kwenge the Sixth . . . . . *frontispiece*

II. (a) Patchwork cultivation in Chiwale area . . *facing page* [illegible]
(b) A small village in typical surroundings

III. (a) Villages on the floor of the Rift Valley . . . [illegible]
(b) A village in the Dremit Valley near Zomba

IV. A dispute in settlement at Chiwale's hut . . . [illegible]

V. Village headman, Nyenje, at his installation ceremony . [illegible]

VI. A typical village Headman . . . . . [illegible]

VII. A lineage elder in Ciwejele Village . . . . [illegible]

VIII. (a) Women of a matrilineage preparing cassava together [illegible]
(b) A hut in Ali Kumbele's village

IX. (a) Part of a village in Nanwere area . . . . [illegible]
(b) A slightly different view of the same part of the village

2: Mitchell E-5 (1946-1949) 1956 FT7 Yao FT7

LIST OF TABLES, DIAGRAMS AND MAPS

TABLES	PAGE
I. Densities of Population in Tribal Areas: 1945	13
II. Tribal Composition of the Chiefdoms: 1945	14
III. Movements of Villages within Kwingo-Livunde area	60
IV. Origin of Villages which have arrived in the Kwingo-Livunde area since the White Conquest and are still there	61
V. Headmen of Village Headmen who are Aborigines, Invaders and Newcomers	63
VI. Religious Affiliation of Aborigines, Invader and Newcomer Headmen	67
VII. Proportions of Related and Unrelated Headmen among the Invaders	69
VIII. Proportions of Related and Unrelated Headmen among the Newcomers	70
IX. Proportions of Relatives and Non-Relatives among Administrative Headmen	71
X. Distribution by Size of Villages under Aborigines, Invader and Newcomer Administrative Headmen	88
XI. Proportion of Administrative Village Headmen among all Village Headmen of the Three Categories in Chikwere, Ngokwe, Chumbe and Mpwa Areas	89
XII. Proportion of Administrative Village Headmen among all Village Headmen who are Related and not Related to the Chief in Chikwere, Ngokwe, Chumbe and Mpwa Areas	90
XIII. Proportion of Administrative Headmen among all Village Headmen of the Same Religion as, or Different Religion from, that of the Chief (Mum) in Chikwere, Ngokwe, Chumbe and Mpwa Areas	90
XIV. Proportion of Administrative Headmen among all Village Headmen of the Same Tribe as, or Different Tribe from, the Chief in Chikwere, Ngokwe, Chumbe and Mpwa Areas	91
XV. Size of Administrative Villages under Headmen with Scarlet Headbands and those without	94
XVI. Headmen of Headmen holding Boys' and Girls' Initiation Rights among Aborigines, Invader and Newcomer Headmen	97
XVII. (a) and (b) Initiation Rights among Invader and Newcomer Headmen who have Villages with more and less than six Taxpayers	98-99

2: Mitchell E-5 (1946-1949) 1956 FT7 Yao FT7

TABLES PAGE

XVII. Initiation Rights among Invader and Newcomer Headmen who are Related and Unrelated to the Chief . . 100
XIX. The Origin of Initiation Rights of Some Newcomer Headmen 101
XX. When Initiation Rights were Granted to Newcomers and Invaders 102
XXI. The Distribution of Initiation Rights among Headmen of Different Religions 103
XXII. The Distribution of Initiation Rights among Headmen of the Same and Different Tribe as the Chief . . . 103
XXIII. Marks of Rank among Administrative Village Headmen . 104
XXIV. Rank Scores for Administrative Village Headmen of Different Categories 106
XXV. Relationship of Adult Survivors: Ali Kawaka Village . 143
XXVI. Size of Villages under Headwomen and Headmen . . 145
XXVII. Ownership of Huts in Cikuju Village 189
XXVIII. Senior Marriage Sureties in Cikuju Village . . . 191
XXIX. Ownership of Huts in Mpundu Village 198

DIAGRAMS

1. Rainfall in Liwonde and Fort Johnston districts . . 11
2. Paradigm of the Political Structure 103
3. The Sorority-group 148
4. The Ownership of Huts in Cikuju Village . . . 188
5. The Ownership of Huts in Mpundu Village . . . 196
6. Kinship terms for Parents' Cross-Cousins . . . 199
7. Kinship Terms between the Dominant Lineage and Patri-lineally-linked Groups 201

MAPS

I. Africa: Showing where the Yao live 9
II. Southern Nyasaland: Showing the positions of Machinga and other Chiefs 13

2: Mitchell E-5 (1946-1949) 1956 FT7 Yao FT7

LIST OF CASE HISTORIES AND TEXTS

PAGE

1. Mlima-Ngwaya dispute over Government recognition . . . 86
2. Mdilo-Kalonge dispute over Government recognition . . . 86
3. Pungwa-Chimdo dispute over Initiation Rights 96
4. Ndondola-Mdoka dispute over Initiation Rights 96
5. Ndondola-Lisunde dispute. The opposition of village Headman and Chief 108
6. Kalombo-Lupanje dispute. The mystical force of senior matrilineages 115
7. The split of Chimoko Village: A bad Headman leaves his followers 117
8. Chinje-Mdoka dispute. The Corporate Action of villages in a dispute 118
9. Chiwala-Mangwera dispute. The opposition of villages to matrilineal succession 130
10. Text of Ndowe's views on the Society-group 140
11. Mwambujile-Swana Issue dispute. An unsuccessful village split 151
12. Split of Mpunda Village. The rivalry of the Headman and his younger brother 155
13. Wali-Mbidaje dispute arising out of succession to Headmanship 158
14. The History of the Succession to Mpunda Headmanship . 161
15. The opposition of lineage segments in Chinje Village . . 165
16. Ali Kasoka-Mwanaye dispute. The opposition of generations 179
17. Ali Chiwana-Widow dispute. The opposition of the Headman's children and his matrilineage 191

NOTE

|2| |6| Where I have used abbreviations for kinship terms I have followed the Rhodes-Livingstone Institute convention:

M — mother	B — brother	H — husband
F — father	Z — sister	W — wife
D — daughter	S — son	G — sibling

Other symbols are built up on these, so that 'father's sister' is FZ and 'mother's father's sister's son's daughter's husband's brother' is MFZSDHB. Seniority is indicated by a plus or minus, so that 'older brother' is + B and 'younger brother' is — B. I have used the combination XC to stand for 'cross cousin'.

2: Mitchell E-5 (1946-1949) 1956 FT7 Tao FT7

CHAPTER I

THE PROBLEM IN ITS ECOLOGICAL SETTING

The Problem

At a joint meeting of the Royal Anthropological Institute and the International African Institute in 1948, Gluckman said: "Many District Officers have described the village headman as the invaluable Non-Commissioned Officer of native administration. Yet despite various references in earlier literature to his important political, legal and ritual responsibility for his dependants, there has not yet been an adequate appreciation of his key position in the social structure."[1] [2]

In this essay, I have tried to examine this problem in relation to one of the tribal groups in British Central Africa. Gluckman pointed out that one fact among the diverse characteristics of Central African peoples is constant—people live in villages. This was observed by the earliest travellers in the region, who gave the English word "village" to the groupings of huts they saw, and so this important point passed imperceptibly into the descriptions of the social organization of the peoples. Yet, perhaps because of its very obviousness, it is an interesting fact that no studies have been made of the position of the village as such in the social structure. It is clear that Lozi villages[2] and villages along the Luapula River, where the environment sets a stamp on the village composition,[3] are different from Nyakyusa villages where boys of one age-grade strike out to found a new village,[4] or from Ngoni villages where a diversified set of kinsmen [2] [3] [4]

[1] Gluckman, M., Mitchell, J. C., and Barnes, J. A., "The Village Headman in British Central Africa", *Africa*, xix, 2 (April 1949), 89-106.

[2] Gluckman, M., *The Economy of the Central Barotse Plain*, Rhodes-Livingstone Paper, No. 7 (1941), and his contribution to the symposium, *Seven Tribes of British Central Africa*, eds. Colson, E., and Gluckman, M., Oxford University Press for the Rhodes-Livingstone Institute (London, 1951).

[3] Cunnison, I., *Kinship and Local Organization on the Luapula*. Communication from the Rhodes-Livingstone Institute, No. 8 (Livingstone, 1956).

[4] Wilson, G., "An Introduction to Nyakyusa Society", *Bantu Studies*, x, 3 (1936), and Wilson, M., *Good Company*, Oxford University Press for the International African Institute (London, 1951).

2: Mitchell E-5 (1946-1949) 1956 FT7 Yao FT7

[2] adhere to a headman whose position is fixed in an historically
[3] determined hierarchy.[1] Yet it stands the test of observation that there are in all tribes of this region small concentrated settlements of people who look upon themselves as groups, and who play an important part in the political activities of the community.

In my analysis of the social structure of the Yao, I have taken the village and tried to see it as a unit in a larger field of political relations. I have also tried to see it as a unit in itself, internally differentiated. I have taken the district under the jurisdiction of a Native Authority as the whole, the universe, which is to be resolved into parts. Before the British forces subjugated the
[2] tribes of Nyasaland, there had been a period of intensive tribal
[3] movement and intertribal warfare. Some groups had gathered
[4] around successful warriors and maintained their identity; others had been broken and dissolved by stronger forces. The British conquest ended the period of military adjustment, and for administrative purposes the country was divided into districts. Within these districts some adherents gathered around their former leaders while others preferred to remain where they were. Tribes such as the Nyanja, who were the original inhabitants, remained in residence; newcomers such as the Lomwe immigrated from Portuguese East Africa. But where the Administration have officially recognized chiefs in these districts it was the successful Yao invaders who were recognized and not the indigenous Nyanja or immigrant Lomwe.

While the war-making units of the Yao—the tribal groups
[2] under numerous chieftains—were broken up by the British forces,
[3] the smaller component units, the villages, survived. From early records and from the tales told by old men who can still remember something of the pre-White days, we know that the people have always lived in villages, though their structure has probably changed since those days. The villages were far and away the most important social units within any of the chiefdoms. The "village" was and still is a key concept in Yao thought. I shall demonstrate later that it was the smallest group acting in the political field. At the same time it was, and still is, the field in which kinship was most significant. This is why I have taken

[1] Barnes, J. A., in his essay "The Fort Jameson Ngoni", *Some Tribes, and Politics in a Changing Society*, Oxford University Press for the Rhodes-Livingstone Institute (Cape Town, 1954).

2: Mitchell E-5 (1946-1949) 1956 FT7 Yao FT7

the village as the fundamental unit in my description of Yao social structure. I have tried to describe other social groups in a village context: for example, how lineages and families make up the village; how the religious congregations, particularly the Moslems, still organize their relationships on a village basis; and so on.

The position of the village in the social structure therefore has to be analysed from two aspects. Firstly, it is a unit within an organized whole—the chiefdom. Secondly, the village itself is a whole, with its own structure and morphology. Dividing the total structure into two sections and considering the village both as a part of a whole and as itself an organized whole, simplifies description. In fact, there is one continuum of social relationships, and the internal organization of a village reflects its position in the total structure. For example the fission of a matrilineage is significant in both the fields of kinship and politics, since through it kinsmen separate and found new villages.

Throughout this essay I use the word 'village' to mean both a concentration of huts and a social group. The two ideas are inseparable in Yao thought and it will be clear from the context of the sentence which meaning I intend. A word of warning is necessary here for those who are familiar with Administrative terminology in Nyasaland. The Administrative use of the word 'village' is different from mine. To me a village is a discrete cluster of huts occupied by a group of kinsmen who recognize their own identity against similar groups. The Administration has for its own purposes classified the population of each district into 'villages' under renumerated 'village headmen'. Very frequently these do not fall directly within the scope of this study. Wherever I refer to the villages in the Administrative sense I shall use the phrase 'Administrative village'; otherwise the word 'village' refers to the indigenous social group which I have defined.

In order to burden the reader with as few strange-sounding names as possible, and to spare him the task of learning many general village backgrounds, I have tried as far as possible to draw my illustrations from two villages, Ali Kwanka and Cikuju.[1]

[1] These names and the names of most of the characters in this book, except those of the well-known chiefs, are fictitious, so that their anonymity might be preserved.

2: Mitchell E-5 (1946-1949) 1956 FT7 Yao FT7

121 But I have used illustrative material from other villages where it was more complete or less confusing. In Appendices, I set out genealogies, hut censuses, and plans, of the two villages. In the text I use reference numbers in these genealogies, by generation and position in generations, to identify people.

It is necessary to select illustrations because the structural uniformities I wish to describe are often hidden by the idiosyncrasies of particular examples. The general principles of social structure, as I present them here, have been abstracted from my observations over a period of two years, not only in Cikuju and Ali Kanuka villages, but in many others in the Machinga area. I present my illustrations not with any belief that they prove my analysis, but only to help the reader set the principles I describe in the reality of Yao life.

The Field Work

123 I spent the first two weeks of my stay in Nyasaland talking over my proposed field work with the Administrative officers of the Nyasaland Government. The Provincial Commissioner suggested that I should do a round trip of the Yao area with the District Commissioner at Zomba. After this tour, in consultation with Chief Kawinga and the District Commissioner, I decided that the best place for me to start would be in Chief Chiwaula's area. The District Commissioner then took me to Chiwaula who indicated a site in his court-village where I could pitch my tent.

124 For the first week I held meetings with the chief and some of the older men of the vicinity and spent most of my time making notes on material culture, 'customs' and history. On the first page of my notes I find that there is a good description of Yao beliefs in sorcery, all described as if it were in the past: a full year was to pass before my informants were prepared to admit that these beliefs were still held. After a week or two of this
123 general activity I decided to try my first village census. The
125 results were hardly encouraging. Often when villagers knew
203 I was coming they slipped away into the bush. Those who were left frequently refused steadfastly to answer my questions. Many rumours arose to explain my presence. I heard, for example, that I had been sent by the Government to record the names of those to be taken away as soldiers for the next

2: Mitchell E-5 (1946-1949) 1956 FT7 Yao FT7

war. I heard that I was an American spy, and also that I was a spy for the Portuguese, because Nyasaland, or at least the Yao area of it, was going to become part of Mozambique. I spent much of my enforced idleness during these early months copying down texts in Yao from my clerk and translating them into English.

Towards the end of 1946, when the rains had set in, I decided to move into a vacant house on a tobacco market about five miles from where I had first pitched my tent. I then started to make a census of the nearest village. Here the attitude of the people was markedly different and I established friendly and happy relationships with them. For some weeks I systematically made censuses of the surrounding villages, and got my first insight into the structural principles of Yao villages. I left this area to attend a conference of research officers of the Institute, and when I returned I pitched my tent in the village into which my personal servant had married. By this time I was speaking some of the language and had started to talk to people directly. I now began to establish a set of informants who would come to my tent in the afternoons and dictate texts to me in Yao on various topics of interest, which I immediately translated into English. The mornings I spent out in neighbouring villages. It was during this period that I gradually heard about the various ceremonies that were being performed and was able to attend them. My wife too was able to attend some of the women's ceremonies. Some months later I moved down to Kawinga's area and pitched my tent in one of the largest and most complex villages I could find and made a complete census of it. I chose this village so that it would be sufficiently close for me to attend Kawinga's court, which was the largest in the area. I left the field in September 1947, and in September 1948 returned to Chiwalo's village. I now engaged a new clerk who could speak no English and who came from the village in Chiwalo's area where I had originally settled. During my second trip I visited Juhasi, Katali and Kalombo chieftaincies, all in different parts of the Yao country, and made village censuses in each.

The procedure I adopted in making village censuses was as follows. Usually I visited the headman a day or so in advance to explain my intention to him. Most of the villages I studied were fairly close to that in which I was camped so that the people

2: Mitchell E-5 (1946-1949) 1956 FT7 Yao FT7

125 knew as a rule what information I wanted. On an appointed
124 day I went to the village in the early morning. My first task was to make a rough sketch of the position of the huts and to number them. Then with the aid of some of the men of the village (who were usually the wardens of security-groups) I went from hut to hut completing a Rhodes-Livingstone Institute standard census form for each adult person who lived in the hut. Later I found that if I completed the census forms for certain key personalities who were dead, I could sometimes construct most of the genealogy of the village without having to question the headman any further. More commonly, however, especially in the larger and more complex villages, I found that it was necessary for me to meet the headman and some of the older men afterwards to complete the genealogy of the village. When I did this it was customary for the men of the village to gather in the common shelter or around me under the verandah of the hut where I was working. The women were not invited now, at least at the beginning of the interview. Soon, however, the men became more and more confident. At some stage or other they would begin shouting questions over to the women, who were sitting discreetly under the verandah of an adjoining hut or in the shade of a conveniently close tree, from where they could hear the proceedings. Eventually, almost without fail, the older women were brought closer and the difficulties straightened out. In time I became accustomed to this procedure and accepted the fact that the first genealogy would have to be discarded and a second made later with the help of the women.

126 It was during the house-to-house census that many valuable leads emerged. During the census-taking, for example, unusual types of marriage with kinsmen appeared which I was able to follow up immediately in terms of an actual case history; or, if it were likely to be embarrassing at that moment, I noted it down and made specific enquiries later, for the census-taking was usually done in public.

124 The quantitative material presented in Chapter IV on Prestige
124 and Rank among Village Headmen was collected at the chief's court. I worked with the chief's tax-clerk and one or two of the chief's councillors. We worked through the tax-register, and the councillors answered a set of questions about each village headman. In two areas the chiefs called the village head-

2: Mitchell E-5 (1946-1949) 1956 FT7 Tao FT7

men into a public meeting and each answered the questions personally. Where the information was not known, I made special enquiries to obtain it. Later I transferred this information on to small cards which I subsequently used in the statistical analysis. During my survey of Malemia chieftdom I was able to employ six African clerks whom I trained to record genealogies. They surveyed a 10 per cent random sample of villages in the chieftdom. The material from these genealogies has been transferred to Hollerith cards for statistical analysis at some future date. During this period, Mr. Cavell Wilcocks, who was then Agricultural Instructor at the Jeanes' School, and I were able to make a map with chain and compass of every garden cultivated by members of a large village. While the general results of this study have been included here, a detailed analysis is still to be made.

The material used in the chapters which deal with the pre-White times has been derived mainly from the published works quoted in the Bibliography. I was also able to consult records in the Central African Archives. By permission of the Nyasaland Government I was allowed to read through the District Books at Fort Johnston and Zomba, and through some of the files which contained information collected by early District Officers. I was also able to consult the detailed returns of the 1945 Census at the District Commissioner's office in Zomba. The Agricultural Officer at Fort Johnston, under whose jurisdiction the area where I was working fell, was kind enough to let me read some reports and to give me statistics of sales of tobacco and other agricultural produce at the Government-controlled markets, as well as details of rainfall and temperature.

The ideas in this book have been developed in a number of Rhodes-Livingstone Institute staff conferences and at seminars at Oxford. During a preliminary period of writing at Oxford between September 1947 and August 1948 I prepared the manuscript of what was later to become my contribution to the symposium *Seven Tribes of British Central Africa*. I cannot overemphasize the importance of this essay in setting the problems examined in this book and in clarifying my approach to them. It brought home to me more than anything else the truth in the aphorism: the hardest part of field work is writing it up.

2: Mitchell E-5 (1946-1949) 1956 FT7 Yao FT7

Topography and Surface Water

[13] [53] The Protectorate of Nyasaland lies between latitudes 09° 45′ S. and 17° 16′ S. and longitudes 33° E. and 36° E. It includes most of the surface of Lake Nyasa, the most southerly of the African Great Lakes. This dominant topographical feature, from which Nyasaland has taken its name, is part of the Great Rift Valley which runs from north to south through the territory. On the western, northern and eastern shores of the lake the coastline is fringed by great mountain masses, some of which drop sheer to the lake without a coastal shelf. In the south, the broad base of the valley forms a plain through which runs the Shire River which issues from Lake Nyasa. The western edge of the Rift Valley is fringed by the Kirk Range which sweeps north-westwards to form the Dedza Highlands. On the eastern fringe the valley forks to the east to form a plain between the Mangoche Highlands, the highest point of which is 3400 feet above mean sea level, and the great mass of the Shire Highlands, the highest point of which is 11,000 feet above mean sea level. This plain rises sharply about 800 feet in a mile or two to 2000 feet above mean sea level, eastwards from the Shire River. This forms the scarp of the Great Rift Valley. From the scarp it slopes gently to the west to the smaller lakes Chiuta-Amarambe and Shirwa which lie on the Portuguese East Africa border. Between the Mangoche Highlands and the Shire Highlands the plain is broken by the Chikala-Chawai Range which protrudes almost to the shores of the Lake Shirwa, just to the north of its centre. This range, which forms an outstanding natural fortress, has played an important role in the history of Kawinga's followers.

The Mangoche Highlands, the ridge along the scarp of the Great Rift Valley and the Shire Highlands, here form the watershed between the rivers which flow into the Shire and thence the Zambezi, and the rivers which flow into the Chiuta-Amarambe, thence into the Lujenda and to the Rovuma River, or into Lake Shirwa which has no outlet. All the main rivers flow to the Indian Ocean. While the Great Rift Valley is well drained by the Shire River, the plain is inefficiently drained by the rivers which flow to the two smaller lakes. The shores around Chiuta and especially Shirwa are liable to inundation during the rainy season: hence the area depicted on the map is not all suitable for

2: Mitchell E-5 (1946-1949) 1956 FT7 Yao FT7

Map 1. Africa.
The shaded portion shows roughly where the Yao live.

human habitation. Large areas around Lake Shirwa are in fact marshlands in the wet season, and stretches of poor sandy and slightly saline soil during the dry season.

Generally speaking the distribution of surface water throughout this area is variable. The highlands are on the whole well supplied with streams which rise in the mountains and flow

2: Mitchell E-5 (1946-1949) 1956 F77 Yao F77

[33 evitably throughout the year. In the plains many small rivers
30 flow quite strongly during the rainy season but dry up shortly afterwards and by July or August the water shortage becomes acute for many villages. In the rainy season plenty of shallow pools supply the water of the people; as these dry up the women must go farther and farther afield to find water. To the east of the watershed of the plain the distance they may have to go is still within the bounds of possibility, but on the valley lip this is no longer so,[1] and large areas of the escarpment, especially to the south towards the Shire Highlands, are unpopulated. The Administration has been sinking wells in an attempt to increase the amount of land available for human habitation. It reports that seven other wells had been sunk villages moved there and started gardens;[2] this indicates the pressure of the population on
[34 the land. Within the area where most of my study was made, i.e. from the northern fringe of the Shire Highlands, agriculturalists describe the soil as 'variable'. The Agricultural Officer at Zomba, writing of this area, said:

> In the valley of the Shire the soils may be described as rich sandy alluvium. Around the hills the soil is chiefly red with a high percentage of clay and a small percentage of sand. Much of the soil in the ridge of highland stretching from the Chikala hills in the south to the hills near Mount Mangochi in the north is sandy and poor, with pockets of good rich soil here and there. The soil improves as the land slopes down each side of the ridge to the west to the Shire Valley, and to the east to the shores of Lake Shirwa and Lake Chiuta.[3]

Climate

[35 The climate is the tropical monsoon type. The average annual rainfall over the years 1944-6 at the three stations, Juloni, Nyambi and Mlomba, i.e. placed at even intervals throughout the area of study, was 41·89 inches.[4] The rainfall is slightly heavier in the higher areas. This rain falls almost entirely during the

[1] The relation of water supply to population distribution in Nyasaland is discussed by Dixey, F., 'The Distribution of the Population of Nyasaland', *Geographical Review*, xviii (April 1928), 174 ff.

[2] *Nyasaland Protectorate Report on Native Affairs* (Zomba, 1951), 47.

[3] *Report of the Agricultural Officer, Zomba, to the Director of Agriculture* (1946) (unpublished).

[4] I am indebted to the Agricultural Officer, Port Johnston, for this information.

2: Mitchell E-5 (1946-1949) 1956 FT7 Tao FT7

months November to March inclusive. Diagram 1 shows the distribution of the rainfall during the year. Very little rain falls during other months. The initial rains of the year are ushered in by convectional storms and very heavy downpours. This causes a heavy run-off, flooding of the rivers and lake shores, and much erosion of the parched land which by this time has become

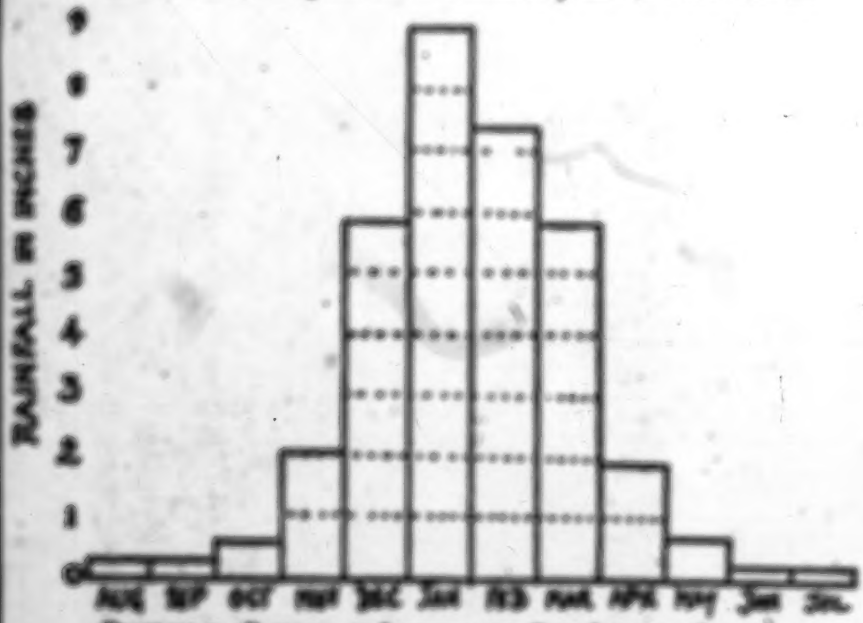

Diagram 1. Rainfall at Lowdale and Fort Jameson Districts.
This diagram shows that almost the whole of the rainfall occurs between November and April.

very dusty. During December there is usually little rain for a short period of a week or two. After that the rains change their character and become more steady and drenching. They decrease in March and April, and thereafter, little rain falls.

The Yao concept of the seasons follows this feature of the climate. The year is divided into two seasons, called *caka*, the wet season, and *ceu*, the dry season. The wet season is the one in which most agricultural activity is carried out. The gardens are hoed up and planted, weeded and tended, and the crops harvested, between the months of October and May. During

2: Mitchell E-5 (1946-1949) 1956 FT7 Yao FT7

241

(a) Patchwork cultivation in Chiwalo area. Note how the natural vegetation has been cleared for maize gardens. Patches of ash from burnt garden refuse can be seen to the left. There are also two small villages in the foreground and a large village distinguishable by the dark patch of mango trees at the foot of the hill in the top left-hand corner.

(October 1946)

137

(b) A small village in typical surroundings in Chiwalo area.

(August 1946)

PLATE II [facing p. 12]

2: Mitchell E-5 (1946-1949) 1956 FT7 Yao FT7

the dry season, in contrast to the busy wet season, there is much visiting and social activities are resumed. Dances and initiation ceremonies also are mostly held during the dry season. The only agricultural work done during this time is the clearing of the bush and the stacking of the brushwood ready for burning.

The temperatures are high. I have no records for the three stations in the area because recording has started only recently. It is hottest during the months just preceding the rains, i.e. September to December, and coldest during May to August. I have never heard of frosts in the area so it is unlikely that the temperature falls below freezing point. Hornby records the mean maximum temperature for Liwonde as 82·3° F. and the mean minimum temperature as 59·3° F. These are for Liwonde station which is in the Shire Valley. The temperature for the plains and the highlands is probably a few degrees less.

Vegetation

The natural vegetation in this area varies from thick rain forest along the permanent watercourses to open grassland in the marshy patches. In forestry reserves and other places where the vegetation has not been cut out, trees 20 to 30 feet high predominate with thin undergrowth. Along the Shire Valley much of the vegetation is untouched, but in the highlands and on the plain most of the unprotected forest has been cut out for garden lands. In the open spaces between trees the land is covered by elephant grass six to eight feet high.

Population

The density of the population in Nyasaland as a whole is high in comparison with that in the surrounding territories.[1] Within the Territory itself the densities in some districts are as high as anywhere in Africa.[2] The population as a whole is concentrated in the highland districts of Dedza and the Shire Highlands. The districts in which I worked are less densely populated than most of the districts in the Southern Province, but of average density

[1] Expressing densities as total population per square mile. Nyasaland, 55·5 (1945); Tanganyika, 17·0 (1946); Portuguese East Africa, 14·5 (1938); Southern Rhodesia, 11·5 (1946); Northern Rhodesia, 5·0 (1946).

[2] Chitipa district, 309·8; Cholo, 191·9; Zomba, 152·4. *Nyasaland Census*, 1945, Table 8.

2: Mitchell E-S (1946-1949) 1956 FT7 Yao FT7

for the Territory as a whole. Within these districts[1] there is a population of 117,035. This estimate is based on an actual count and is probably more accurate than the usual questionable estimates of African population. The population as shown by the censuses over the last 35 years has been increasing rapidly. Between 1931 and 1945 in Kawinga, Liwonde and Nyambi areas it increased from 39,154 to 64,840 which represents an annual rate of increase of 3·5 per cent. This is due partly to immigration and partly to natural increase, but it is difficult to estimate which is the more important since immigration figures for Africans are unobtainable.[2] The density of the population in these areas, in 1945, is set out in Table I.

TABLE I

DENSITIES OF POPULATION IN THREE AREAS: 1945

Chieftdom	Area in sq. miles	Total Population	Density per sq. mile
Jalasi	800	40,287	50·4
Nyambi	131	7,335	56·0
Kawinga	682	44,789	65·7
Liwonde	396	12,176	30·7
Malemia	50	12,448	248·9
All areas	2059	117,035	56·8

Source: Areas from the Provincial Commissioner, Southern Province. Population from the detailed returns of the 1945 Census.

Of these areas Malemia has the highest density, 248·9 per square mile. This is on the fringe of the highlands which are the

[1] From the 1945 Census. These areas are Kawinga, Liwonde, Nyambi, Jalasi and Malemia. Other Machinga chieftdoms are Mpondas (18,701), Kalembo (11,260), Nazunda (11,582), and Nsomanja (17,467), but in these I have spent only a few days and I do not include them in the main analysis. I also spent some time in Katuli area (12,245) in Fort Johnston district, and Nuja area (17,195) in Blantyre district, but these are not Machinga Yao, and I only refer to them to illustrate points. My generalisations do not apply to them.

[2] There is some evidence that the natural rate of increase would double the population in 25 years. See Mitchell, J. C., 'An Estimate of Fertility in some Yao Hamlets of Liwonde District of Southern Nyasaland', *Africa*, xix, 3 (Oct. 1949), 293–308.

2: Mitchell K-5 (1946-1949) 1956 FT7 Yao FT7

[6] economic centre of Southern Nyasaland and much land has been alienated to Whites there. Liwonde area, which has only 307 to the square mile, has large parts that are unpopulated because of [7] the lack of surface water on the escarpment of the Rift Valley.

This population is by no means homogeneous, tribally or [8] linguistically, but culturally the tribes are all very similar. The Yao, Nguru and Nyanja, who comprise most of the population, [9] live in villages under village headmen; marry uxoriously; have similar practices and beliefs in sorcery and disease. Table II

TABLE II

TRIBAL CONSTITUTION OF THE CHIEFDOMS: 1945

Chiefdoms	Total Population	Percentages of Tribes			
		Yao	Nguru	Nyanja	Ngoni
Mbwi	40,087	81·5	12·4	3·9	0·2
Nyambi	7,111	72·0	26·8	0·0	0·0
Kawinga	44,789	48·7	33·7	14·1	3·2
Liwonde	12,176	72·0	19·6	7·0	0·2
Mdimba	12,248	73·1	9·6	13·7	1·6

Source: Nyasaland Census, 1945. Abstracted from the detailed returns at the District Commissioner's Offices at Zomba and Fort Johnston.

shows the tribal make-up of the five areas with which I am concerned. Three-quarters of the population in all these areas are Yao. In Kawinga area, in which non-Yao tribes are most numerous, only one-half of the people are Yao, but included in this area are the two Mpondas subordinate chieftains Ngokwe and Chikweo, whose followers are predominantly Nguru (42·7 and 55·7 per cent).[1] If we exclude these two chiefdoms, the proportion of Yao in the rest of Kawinga area is 55·6 per cent. Nyambi and Kawinga areas, lying as they do against the Portuguese East African boundary, have the greater proportion of Nguru. Within Kawinga area the concentration of the Nguru along the boundary is also shown. Chiwalo chiefdom, which lies to the west of Kawinga area, has only 15 per cent Nguru,

[1] It seems here that the Mpondas may have been enumerated as Nguru and Nyanja.

[text continues on p. 16]

2: Mitchell E-5 (1946-1949) 1956 F'27 Yao F'27

102
341

Map II. Southern Nyasaland.

Showing the positions of Machings and other Chiefs.

1. Mdangila (Mawanga)
2. Kanali (Chiti)
3. Jalali (Machinga)
4. Nyambi (Machinga)
5. Ngokwa (Ngonde)
6. Chikowa (Ngonde)
7. Chiwalo (Machinga)
8. Kwelaga (Machinga)
9. Liwonde (Machinga)
10. Mpeta (Machinga)
11. Chimtola (Machinga)
12. Mdimba (Machinga)
13. Mwanaje (Machinga)
14. Mamolo (Machinga)
15. Kalembo (Machinga)
16. Mpondo (Machinga)
17. Mchikumba (Nyanja)

[p.15]

2: Mitchell E-5 (1946-1949) 1956 FT7 Yao FT7

§2, §3 slightly more than the extreme southerly chiefdoms, Mpeto and Chambo. As we have seen, half the population of the two most easterly chiefdoms is Nguru.

The Nyasja are concentrated mostly along the Shire River banks and around the Lake Shirwa shores. Most in Kwinga are at the north end of the Lake Shirwa or in Mpeto at Lake Shirwa[1] and, according to the census, in Ngokwe in the extreme north-east. It is possible that in Ngokwe some of the Mpondo have been enumerated as Nyasja.

Although my study was of the Yao, I cannot exclude these other ethnic groups from it. The specific percentages must not be considered as exact reflections of the tribal make-up in the area. Though the villages of the three main tribal groups tend to be distinct, and intermarriage is not as great as might be expected, there are increasing numbers of children of mixed tribal parentage. There is some value in the figures, but we must take into consideration the general political situation in these chiefdoms. I enlarge upon this theme later. Generally speaking, however, the Yao have come in as invaders, while most Nguru have come in as immigrants. The Yao have greater prestige both in the eyes of the Whites and in the general structure of the chiefdoms. Many Nguru therefore, who have been in this area for some time, have come to call themselves Yao if they are asked, especially by a White man. This is especially true of the Mpondo people where they are living under Yao chiefs. The Mpondo are technically Nguru but must have lost their own language and speak only Yao. The Administration did not classify the Mpondo as a separate tribe in the Census and it is difficult to decide whether they were included as Yao or Nguru. Most of the Mpondo headmen I have met in Yao chiefdoms have called themselves Yao until they were prevailed upon to qualify their claim. Allowing for some discrepancies in the figures, the table shows nevertheless that numerically the Yao outnumber any other tribe in the area. In general, the other tribes are members of the chiefdoms and take part in most of the social activities which occur within them. I outline later the position of their headmen in the general political structure, but I wish to set out here some general notes on the tribal background of the non-Yao groups.

§3 The term Nguru is applied to a large group of people who call

[1] 32 per cent of the population in Mpeto's area is Nyasja.

2: Mitchell E-5 (1946-1949) 1956 FT7 Yao FT7

563

themselves Alomwe. These people came from that part of Portuguese East Africa immediately to the east of Nyasaland. They speak a group of dialects mutually intelligible and widely different from either Yao or Nyanja. Culturally and structurally they are similar to the Yao and Nyanja, practising matrilineal descent and uxorilocal marriage, and living in small groups of matrilineal kin. Their religious and mystical beliefs are also the same. Some of the linguistic groups that form this congeries are the Shirima, Kokhola, Mesho, Thokwani, Ratha, Kowa, Nahara, Marenje, Nyamwelo, Mihavani and Nikhokho. These people have been migrating into Nyasaland over the last fifty years, and now predominate in the Cholo and Chiradzulu districts.

The Nyanja were the original inhabitants in these areas, but have been almost completely displaced by the Yao, except in Liwonde along the Shire River and in Kawinga along the Lake Shirwa shores. Linguistically they are more akin to the Yao than to the Lomwe, but their language is still unintelligible to the Yao. Culturally they appear to be similar to the Yao, and they have accepted certain Yao institutions such as the boys' initiation ceremonies (*lipanda*), and have been fitted into the social and political structure.

The Ngoni, of whom there are very few here, are concentrated on the south side of the Chikala Range, in the areas of Chambo and Mpona, who are subordinate chiefs to Kawinga. They are the remnants of various Ngoni armies that raided into Nyasaland during the last two or three decades of the nineteenth century. As far as I could ascertain they have adopted Nyanja ways and language.

Historical Background to the Modern Economic Situation

439

Nyasaland to-day, as part of the British Empire, is in the general world economic system, and the Africans in the tribal areas participate in this system, though not to the same degree as the White planters in the Shire and Dedza Highlands. If the Yao were ever a people who supported themselves by their agriculture alone, they had adopted a more complex economy long before the Whites came to Nyasaland. Later, when I discuss their historical background, I outline briefly the position

2: Mitchell E-5 (1946-1949) 1956 FT7 Yao FT7

that the Yao occupied in Central Africa as middlemen and traders. As far back as 1798 Lacerda described the Yao elite as active traders. They bartered ivory, slaves, beeswax and tobacco with the Arabs along the East Coast of Africa for guns, gun-powder, cloth and beads. We cannot easily estimate what proportion of the population was engaged in whole-time slaving and trading. The larger proportion must have found it necessary to cultivate their gardens of finger-millet and sorghum in the rainy season to supply them with the major food crops. It seems likely that slave-raiding and trading were occupations mostly followed during the dry season.

The Yao therefore had become accustomed to a variation of activities and division of labour, at least a century before the Whites came to Nyasaland. Their wants at this time had already become sufficiently diversified to include cloth, beads, gun-powder and guns. All these trade goods are more durable than the foodstuffs which are the measure of wealth among a people who support themselves entirely by their own produce. But the individual want for these trade goods was limited, and the Yao used their surplus rather as capital for trading farther inland with other tribes.

There is considerable evidence, both from my informants and the writings of early travellers, that these trade goods—ivory, cloth and slaves—came to be used as currency, and most people recognized a fixed relationship between the three commodities. A female slave could be exchanged for an amount of calico or ivory that was constant over fairly large parts of Central Africa; the value of a tusk of ivory could be expressed in calico in the same way. By enterprise, therefore, in trading and raiding, an individual could accumulate wealth in the form of calico, guns, beads, ivory or slaves. But the personal consumption of trade goods is of necessity limited, so that the Yao preferred to accumulate their wealth in the form of slaves. The reason for this lies in the general political structure of the early chiefdoms, which I describe later. Slaves were not only labourers and serfs; they also increased the military and political power of their masters. At the same time slaves could be sent to the coast in a caravan and bartered for cloth, or, since they were always prized, they could be used to settle claims for compensation from aggrieved neighbours. The slave trade therefore, although related to domestic

2: Mitchell E-5 (1946-1949) 1956 FTT Yao FTT

slavery in that a trader could at any moment send some of his own slaves to the coast, was actually quite a separate institution.

Although the advent of the White Administration stopped both domestic slavery and the slave-trade to the coast, both of which were vitally important elements in Yao economy, it did nothing to decrease or reduce the variety of the wants of the Africans. On the contrary, it obviously increased those wants. The missionaries, who were the first Whites to settle in Nyasaland, were forced to import large quantities of cloth and beads so that they could buy foodstuffs and pay their labourers. They quite unintentionally, therefore, became competitors with the Yao in this trade. By some accounts their goods were both superior and cheaper. As early as 1878 the African Lakes Company was sponsored by the Church of Scotland Mission, so that it could take over the trading part of their dealings with the Africans. The planters and traders who began to settle in the highlands after 1890 brought more and more cloth, beads and other trade goods into Nyasaland to pay wages and buy foodstuffs.

When the Protectorate was proclaimed in 1891 and the Administration started to put down domestic slavery and the trade in slaves to the coast, the monopoly of trade in goods fell directly into the hands of the Whites. After 1893, when coinage was introduced, the economy of the country rapidly changed from one based on barter with slaves and ivory as the main outgoing commodities, and slaves, calico, beads and brass rings as the incoming commodities, to an economy in which the wants had become even more diversified. In 1895, the *British Central African Gazette* could record:

> The wants of the people of this part of the world not long ago were limited to sufficient calico to clothe the family, but in one short year their wants now include boots, size and quality a minor point, turbans, coats, and in fact at a distance the half-naked native of yesterday has the appearance of Sikh soldiery.[1]

That the Yao took to the use of money is illustrated by the Acting Commissioner's statement in 1897: 'The Yao thoroughly appreciate having a currency. It has proved, in fact, a great step towards civilizing the native of this part of Africa. He is now able to accumulate his earnings, which formerly in the days of a

[1] Vol. i, 2 (Sept. 26th, 1894).

2: Mitchell E-5 (1946-1949) 1956 FTT Yao FTT

936 cities currency was an impossibility.'[1] The Africans could hardly have resented the change over to a money economy. The taxation system introduced in 1893 was based on the Governor of
935 Zululand's Proclamation III of 1887, and ruled that a tax defaulter
66 was liable to be conscripted for labour until he had earned the
667 amount of his tax. Coffee estates owned by Whites in the Highlands were at the same time in need of labour.[2] Tax was then taken in kind but it was soon changed to cash as a further inducement to Africans to come on to the labour market. The Africans were forced into the cash economy of the Protectorate even if they were unwilling. The measures were so successful that in 1899 the *Gazette* announced that the labour market in Blantyre was flooded.[3]

Modern Economic Structure

777 In modern Nyasaland, the wants of the Africans have become
92 even more varied than they were in the earlier days. Most younger men wear European-type clothing and shoes. Many own bicycles and sewing machines. Many houses have glass windows and panelled doors and most of them are furnished with some rough furniture which has been bought from local craftsmen. Many have beds and mosquito nets. Few women cannot boast of enamel dishes to replace their clay pottery or china cups to replace drinking gourds. The food habits of the peoples too have broadened. Most households use sugar these days, and many people drink tea. I should say that all households occasionally buy soap. Certainly all need salt, which formerly was burnt from the saline grass around Lake Shirwa or dissolved out of special soils in Portuguese East Africa. The stock-lists of an Indian-owned village shop in Chiwalo's area and of an African-owned canteen in the same area, which I have set out in Appendix A, indicate the range of the wants of the modern African.
934 It is clear that these wants are over and above food require-
465 ments. The people in these tribal areas live primarily on the

[1] *Report of the Consul and Acting Commissioner Sharpe on the Trade and General Condition of the British Central African Protectorate for April 1896 to March 1897.* C. 8452.

[2] See the *B.C.A. Gazette*, iii, 5 (March 1895), and iii, 17 (Sept. 15th, 1896), which print advertisements offering 'native labour arranged for and supplied to plantations at a commission of 7s. 6d. a head'.

[3] *B.C.A. Gazette*, vi, 6 (June 24th, 1899).

2: Mitchell E-5 (1946-1949) 1956 F77 Yao F77

crops grown in their gardens. For their other wants they need cash, and they obtain it either by the sale of their agricultural produce, by trading with their fellows, or by seeking work either within or outside the area. The sale of agricultural produce is probably the most important. A few Africans earn a small living as blacksmiths, bicycle repairers, diviners and healers, fish peddlers and tailors. There are some African canteen or small shop owners, but this field is dominated by the Indians, who between them have a few dozen village and roadside stores. 4/3 f 4/5

A certain amount of money is sent or brought home by labour migrants. I could not estimate how much this is for each household. It cannot be very high on the average, because not a great proportion is working at labour centres outside the area of study.[1] Within the Territory there are few opportunities of earning wages. In Jalasi's area there are one or two White tobacco estates, which employ at the most a few hundred labourers, and a number of Indian storekeepers who may between them employ a hundred men. Otherwise the Government itself, through the Agriculture Department in particular, may employ a hundred or more labourers. There are more opportunities south of Chikala and in the densely populated Malemia area where a considerable number are employed in the neighbouring township, Zomba, and on the surrounding estates. The cash income per adult, male and female, in the area where this study was made probably does not exceed £40 to £50 per annum, and the Yao rely mainly on the sale of their own produce to earn this amount. 4/3 f 4/4

[1] I estimate from genealogies that about 22 per cent of the men over the age of 18 were at labour centres in 1947-8. Table 3 of the 1945 Census shows that, excluding those in the Army, 18 per cent of the men over the age of 18 were away from Liwonde and Port Johnston districts when the census was taken.

2: Mitchell E-5 (1946-1949) 1956 FT7 Yao FT7

CHAPTER II

THE HISTORICAL BACKGROUND TO THE MODERN SITUATION

Before the White coming

TO understand the Yao we must start with the Arab colonization of the east coast of Africa. We know that the Arabs had colonized it as early as A.D. 700. They were a mercantile people, and their trading was so well advanced that by the end of the twelfth century they had founded Kilwa, due east of the north end of Lake Nyasa, as an entrepôt.[1] When Vasco da Gama sailed up the east coast in 1498, he found that the Arabs had well-established posts all along the coast. The Portuguese and the Arabs became rivals for the trade of the African interior, and this rivalry was to continue for many centuries. In 1698 the Imam of Oman drove the Portuguese out as far south as Cape Delgado, and the Arabs had sole control of the east coast[2] up to that point.

The Yao say that their traditional home is between the Lujenda and Rovuma Rivers, east of Lake Nyasa. There can be no doubt, therefore, that Arab trading expeditions passed through the Yao territory, especially since the Rovuma Valley is the most convenient route into Central Africa from Kilwa. We can be fairly certain that Yao contact with the Arabs began at least 200 years before the Europeans came.

Although it is fairly certain that the Jesuits from the Zambezi had explored the Shire Valley and the Lake regions, they left no easily available records of the inhabitants of these areas.[3] One of the earliest references to the Yao is recorded by Dr. Francisco José de Lacerda in a letter dated March 22nd, 1798, addressed to the Minister of State of Portugal. In it he outlines his pro-

[1] Hichens, W., 'Islam in Africa', in Arberry, A. J., and Landau, R., *Islam To-day* (London, 1943).

[2] Pim, A., *Economic History of Tropical Africa* (London, 1940), 19.

[3] Burton mentions in a footnote to *Lacerda's Journey to the Cazembe in 1798*, John Murray (London, 1873), 37, that a missionary José dos Santos resided in this area from 1586 to 1597.

2: Mitchell E-5 (1946-1949) 1956 FT7 Yao FT7

pound visit to the Kazembe of Lunda region, known then as the Wiza country. It is quite obvious that the Yao were serious competitors with the Portuguese for the land trade. Lacerda writes: 175

The dry goods hitherto imported into this country [i.e. Wiza country], have been brought by the Mujao, indirectly or directly, from the Arabs of Zanzibar and its vicinity. Hence these people received all the ivory exported from the possessions of the Cazembe; whereas formerly it passed in great quantities through our port of Mozambique.[1]

It is reasonable to assume that because of their geographical position the Yao had conducted a considerable trade between the interior and the coast, mainly cloth and guns for slaves and ivory—the two were inseparable since the cheapest means of transporting ivory to the coast was by slaves. The Yao trade in slaves led to their major conflict with the British.

When Livingstone made his expedition up the Rovuma in 1866, he found abundant evidence of the influence of the Arabs. Speaking of the Yao chief Mataka, he says: 'He gave me a square house to live in, and indeed most of the houses here are square, for the Arabs are imitated in everything.'[2] Livingstone mentions in particular the trade in slaves that the Yao were conducting in Kilwa. He records that:

The Waiyao generally are still the most active agents the slave-traders have. The caravan leaders from Kilwa arrive at a Waiyao village, show the goods they have brought, are treated liberally by the elders and told to wait and enjoy themselves, slaves enough to purchase all will be procured: then a foray is made against the Manganja who have few or no guns. The Waiyao who come against them are abundantly supplied with both by their coast guests. Several of the low coast Arabs, who differ in nothing from the Waiyao, usually accompany the foray, and do business on their own account.[3]

Even before Livingstone had made his expedition up the Rovuma Valley, there had been a large-scale movement in all directions of the Yao from their traditional home. The tradition is that the name Yao is taken from a hill, grass-covered but 175 101

[1] Burton, *Lacerda's Journey*.

[2] Waller, H., *The Last Journals of David Livingstone in Central Africa from 1865 until his Death*, John Murray (London, 1874), 73.

[3] Waller, *Last Journals*, 78.

2: Mitchell E-5 (1946-1949) 1956 FT7 Yao FT7

ussiku, which is situated somewhere between Mwembe (in Portuguese East Africa) and the Lochilingo Range.[1]

It is convenient to divide the history of the Yao into two major episodes: firstly the movement from the Yao Hill to other hills, and secondly the movement into and within the Nyasaland Protectorate.

Episode I: The Scattering of the Tribes from the Yao Hill

The exact cause of the scattering of the tribes from their traditional home is not clear. Yohannah B. Abdallah suggests that it must have been some internal dissension.[2] Whatever the cause, the tribe broke up into a number of sections, each of which settled at yet another hill from which it took its name. Abdallah lists ten divisions[3] but we need consider only the four that penetrated into British Nyasaland.

These were:

1. The *Achisi Yao*, who settled at Mchisi hill.
2. The *Amasaniga Yao*, who settled near the Lisaniga hill (near the Lutwisi River in Portuguese East Africa).
3. The *Amangoche Yao*, who settled at Mount Mangoche near Fort Johnston, south of Lake Nyasa.
4. The *Amachinga Yao*, who settled near the Mandimba hill. They are called Amachinga because of the serrated edge of the range in which the Mandimba hill is situated. [*Lisinga*—a fence.]

Episode II: The Displacement of the Divisions from their Homes[4]

In time, each of the four sections mentioned found its way into Nyasaland. Briefly the details are:

1. The *Achisi Yao* are represented in Nyasaland by the people under Native Authority Katuli in Fort Johnston district. The 1945 Census showed that there were 12,187 Yao under this chief, i.e. 4·3 per cent of the total Yao population of British Nyasaland. However, not all Yao under Katuli are Achisi Yao, and there are no doubt Achisi Yao elsewhere in small numbers; but even

[1] Abdallah, *Chikala cha Wayao*, 7, edited and translated by Meredith Sanderson as *The History of the Yao*, Government Printer (Zomba, 1919).

[2] Abdallah, *Chikala*, 8. [3] Abdallah, *Chikala*, 9.

[4] For information on areas which I did not visit I have drawn heavily from the Administrative file 'Historical Notes on Districts'.

2: Mitchell E-5 (1946-1949) 1956 FT7 Yao FT7

if we estimate the total proportion as 5 per cent, it is still a small and relatively unimportant group.

2. The *Amanuniego Yao* are represented in British Nyasaland by the people under Native Authority Makanjira, and they are roughly 5 per cent of the total population of the Yao of the Territory. Makanjira himself is said to have been of Nyanja origin. He moved first to the Linuniga Hills, where he acquired a mixed following of Amanuniego Yao and Nyanja; and then by conquest he moved on to the area round Fort Maguire, where he is now established. There are offshoots of the group in Dowa district across Lake Nyasa.

3. The *Amangoche Yao* are of much greater importance, and at present constitute about half of the Yao population of the Territory. During the early part of the nineteenth century, while this group was at Mangoche mountain, it was successfully attacked by the Amachinga Yao under Nkata and Kawinga, and scattered in all directions. Most of the people migrated southwards and settled in the Shire Highlands, where Mlumbe, Chikowi, Kapeni, Matipwiri and other representatives are found to-day.

4. The *Amachinga Yao*[1] were probably displaced from their traditional home, at Mandimba on the Lujenda River in Portuguese East Africa, by attacks from the Lomwe inhabitants in the east. They say that wide-spread famines followed the war and forced most people to migrate. Present-day representatives of this group are Nkata, Jalasi, Mponda, Kalembo, Nsamala, Nyambi, Kawinga, Liwonde, Malemia and Ntumanje in the Fort Johnston and Zomba districts.

The Yao invasion into Nyasaland was not a military incursion of the Ngoni type. Definite evidence on the exact form of the invasion is not available, but informants maintain that many of the first immigrants came into the country peacefully and in family groups (*mbumba*). Often the immigrants found succour with Nyanja groups. Sometimes this hospitality was claimed because the Yao had the same clan names as the Nyanja. The Yao soon took the opportunity presented by internecine struggles among the Nyanja to consolidate their position in the country.

[1] For a more detailed history of this group, especially of the Malemia group, see Stannus, H. S., 'The Wayao of Nyasaland', *Harvard African Studies*, iii (1922), 233 ff.

2: Mitchell E-5 (1946-1949) 1954 FT7 Yao FT7

When Livingstone passed the Lake in 1866 he found Mpondo living in approximately the same place as his successor does to-day, and he mentioned that Kawinga was living on the west of Lake Malombe.[1] He also mentioned that the Machinga dominated the whole of this area, showing that by this time there had been considerable movement into it. When the Church of Scotland Mission was established at Blantyre in 1876, Duff MacDonald recorded that the disposition of the chiefs was as follows: Mlumbe to the north-west of Zomba; Kapeni near Blantyre at Sochi; Mpama at Chiradzulu; Kawinga at Chikala; Malemia on the south-west side of Mount Zomba, and the Matipwiri at Mount Mlanje.[2] These groups, except for Kawinga, still occupy the same positions to-day. At this time most of the movement into Nyasaland had ceased, and the Yao invaders had already set themselves up as rulers over the indigenous Nyanja. At the same time the Ngoni were making frequent forays into the Shire Highlands and the rest of Southern Nyasaland, so that the position was far from stable.

The distribution of the Yao to-day reflects the history of their movement into Nyasaland. The districts nearest and fanning out from the point of entry into Nyasaland, viz. the area due east of Fort Johnston, contain the largest proportion of Yao. The more distant the districts are, the smaller the proportion of Yao in them.

The Entry of the Missionaries

The Missionaries were the first Whites to settle in Nyasaland. When he was in Britain in 1858, Livingstone had recommended the Shire Highlands as a suitable place for the establishment of a Mission. Inspired by his reports, the Universities Mission to Central Africa was founded, and in 1861 Dr. Mackenzie was sent out to establish the Mission. It was an ill-starred venture.[3] From the sociological point of view its significance is that it

[1] Waller, *Last Journals*, 109.

[2] MacDonald, D., *Africana or The Heart of Heathen Africa*, Simpkin Marshall (London, 1882), i, 31.

[3] Rowley, H., *The Story of the Universities Mission to Central Africa, from its commencement under Bishop Mackenzie, to its Withdrawal from the Zambezi*, Saunders, Otley & Co. (London, 1866), and *Twenty Years in Central Africa*, Wells Gardner, Darton & Co. (London, 1889), 3rd Edition.

2: Mitchell E-5 (1946-1949) 1956 FT7 Tao FT7

initiated the relationships of Black and White in Nyasaland and its failure was partly a result of the antiwaiting attitude to colonial peoples at that time. The people of Britain were horrified at the cruelties of slavery, but the Mission drew upon itself severe public censure because it took up arms against the Yao slavers in its vicinity. The Mission had to face a very difficult problem. It was essentially a teacher of the Gospel. Yet almost as the Yao were performing deeds of violence, robbery and murder, and were taking slaves from the Nyanja inhabitants in the area. At the same time hundreds of fugitives and runaway slaves were seeking protection at the Mission. To take in fugitives and runaway slaves was, in African eyes, as political an action as to take physical action against the slavers. Should the Mission close its eyes to these un-Christian barbarities, since they were a part of the secular life of the people, or should it take action against them? Livingstone had had no compunction in releasing slaves, and the U.M.C.A. followed his lead, and not only took in fugitives but actually carried out assaults on parties of slave-raiders. This was the time when the first of the Yao groups under Mpamo and Kapeni were penetrating into the highlands. The indigenous Nyanja, whose political and military organization was very weak, ranged themselves around the Missionaries, and tried to use them against the Yao invaders. The situation soon developed into a struggle between the Missionaries and the Yao slavers, in which the Nyanja headmen played very little part. Disaster followed upon disaster, and eventually the Missionaries decided that it would be politic to withdraw from the highlands and allow the situation there to stabilize before they returned. In Britain, however, public opinion had been roused by their militant treatment of the slavers, and the Mission, after losing three of its members, including Bishop Mackenzie, through illness, was moved to Zanzibar in 1861.

After 1861 there were a few expeditions to Nyasaland, but none of great political importance. In 1876, a second and this time successful settlement was made in the Shire Highlands. The Church of Scotland founded a Mission in Blantyre, which comprised a lay section of artisans and a clerical section of preachers. It was particularly careful that any political action should be taken by the lay, and not by the clerical, members,

2: Mitchell E-5 (1946-1949) 1956 FT7 Yao FT7

787
115

because it was anxious to avoid the censure which its earlier colleagues had suffered. This Mission also felt it could not stand by and see cold murder done in front of its eyes. Yet fugitives came to it as they had to the U.M.C.A., so that the Mission, despite its unwillingness, was inexorably drawn into political relationships with the Yao in the area. The lay members severely punished certain wrongdoers. Eventually an African was murdered at the Mission. They tried the murderer, found him guilty, and allowed a local headman to execute him. The Home Authorities looked upon this action as a trespass from the Mission's proper function. The Mission suffered severe public censure, and several of the lay members were dismissed. It was clear that a Mission in the Territory could not be a mission alone; it could not escape the political implications of the situation, and for the success of its venture some civil authority had to be established.

The Establishment of British Rule

115
698

In the meantime Livingstone's publications were bringing the horrors of the slave-trade home to the people of Britain, and more and more pressure was exerted to bring it to an end. As a result, in 1878, Captain Elton, the Consul at Mozambique, obtained permission to conduct an expedition to Lake Nyasa to enquire into the slave-trade. The British population in the Shire Highlands was now increasing so much that in 1883 a British Consul was appointed. From then on, until the close of the century, Britain followed a militant policy against all slave-traders, amongst whom were the Yao. No active steps were taken to institute a formal government over the territory, until in 1889 the Portuguese appeared at the confluence of the Ruo and Shire Rivers with a large military expedition which they maintained was scientific. Accordingly, on November 21st, 1889, the Acting-Consul declared the territory north of the Ruo to be a British Protectorate. The next year, Mr. A. Sharpe made treaties with most of the Native chiefs in the area. These treaties were later ratified by the Anglo-Portuguese convention of June 1891. It is clear that the British Government was protecting the treaty chiefs against the slave-raiders, and ensuring that no other European power assumed responsibility for this service.

2: Mitchell E-5 (1946-1949) 1956 FT7 Yao FT7

The pacification of Nyasaland after this was largely the suppression of the slave-trade. The Commissioner of the Protectorate (H. H. Johnston) wrote in 1891:

> I felt bound to make our Protectorate of Nyasaland a reality to the unfortunate mass of people who are robbed, raided and carried into captivity to satisfy the greed and lust of the Yao race, these again being incessantly incited to engage in innumerable war and slave-raiding forays by the Arab and Swahili slave-traders who travel between Nyasaland and the German and Portuguese littoral. The big men in this part of the Protectorate with whom it behoved me to deal and whom I must either persuade or coerce into acceptance of an anti-slave policy and sufficient subservience to the new administration as would put an end to further civil wars and inhumane practices, were the following:
>
> Makanjila and Kasumbe, ruling on opposite coasts of the south end of Lake Nyasa.
>
> The Makanjanje clan of chiefs (Tshimdumba, Zarafi, Nkata) which dominates the country between the east bank of the upper Shire, Lake Pamalombe and the Portuguese boundary.
>
> Mponda, the powerful chief holding the Shire where it leaves Lake Nyasa, and possessing a large tract of country along its western bank.
>
> The Angoni chief Tshikusi, who dwells behind Mponda.
>
> Tshingwalo-ngwalo and Mtamara, Yao chiefs along the western bank of the upper Shire, half-brothers and bitter haters of Mponda.
>
> Liwonde, chief ruling an exceedingly rich tract of land along the east bank of the upper Shire.
>
> Tshikusi, the great Angoni chieftain dominating all the hill country between the west bank of the Shire and the Portuguese frontier.
>
> Kawinga, one of the most powerful of the Yao chiefs who dwells near the north-west corner of Lake Shirwa and who commands a great slave-route to the coast, and lastly
>
> Tshikumba, who after being for ten years a roving bandit living on the plunder of the missionary caravans between Blantyre and the upper Shire, has at last settled down on Mount Mlanje to a steady career of slave-trading.[1]

Except for the two Angoni, all the chiefs mentioned are Yao, and three of them, Jalasi, Kawinga and Liwonde, were forbears of the chiefs in whose areas I made my study. The history of the Administration's activities of the next five years is almost

[1] *Papers relative to the Suppression of Slave Raiding in Nyasaland.* C. 6699 (1892). Commissioner Johnston to the Marquis of Salisbury, Nov. 24th, 1891.

2: Mitchell E-5 (1946-1949) 1956 FT7 Yao FT7

175
648

entirely a story of the subjugation of this list of chiefs. Acting-Commissioner Sharp wrote in his annual report in 1897: 'The Yaos . . . were the chief slave-raiders for the Arabs, and in consequence nearly all our expeditions for 1891 to 1895 were undertaken against various sections of this tribe.'[1] The British South Africa Co. had made available a sum of £10,000 a year for providing a police force. As early as 1891, a raid was made on Cikumbu, a Yao slave-trader who had attacked a European coffee plantation in the Mlanje area. After this, there was a continual series of punitive expeditions against various native groups, usually after some slaving incident which precipitated British action. Captain Maguire was killed in 1891 by Makanjila's men, and shortly afterwards the British forces suffered a reverse at the hands of Jalasi. Unsuccessful attacks had been made on Kawinga's stronghold at Chikala. In 1893, two contingents, each of 100 Sikhs, arrived, and with this force more active measures were taken to control the slave-route to Quilamane through Mlanje district. In 1894, the Yao chief Makanjila was attacked and thoroughly defeated. In 1895, there was a concerted effort by the chiefs Kawinga, Jalasi and Matipwiri to oust the British from the Highlands. This commenced with an attack by Kawinga on the friendly chief Malemia, in Zomba area. A force was sent to protect the Missionaries at Domasi, and it stopped the main onslaught. After that, the stronghold of Chikala was scaled and Kawinga completely dislodged. He retreated to the east, and Matipwiri and his relative Mtirimanje were captured. The power of these chiefs was completely broken and no more expeditions were necessary. In 1896, Katuli, a neighbour of Jalasi's, was captured and in the same year Liwonde, who had so far eluded capture, was apprehended and sent as a political prisoner to Chiromo in the extreme south of the Protectorate.

In the meantime the Portuguese were making similar punitive expeditions into the region due east of the Protectorate, and many refugees came into the Territory from Portuguese East Africa. Notable amongst these were the Mpotola groups under Chikweo and Ngokwe, who are to-day settled near Lake Chiuta.

In those parts of the Territory where military action was no longer necessary the framework of the Administrative system was

[1] *Annual Report, 1896.* C. 8438, p. 12.

2: Mitchell E-5 (1946-1949) 1956 FT7 Yao FT7

soon erected. As early as 1893 the Protectorate was divided into Administrative divisions and Collectors were appointed in each. Coinage was issued; a hut tax of 3*s.* was introduced; European claims to land and mineral rights were settled with the chiefs—all large estates were issued with certificates of claim; and a postal system was initiated. The old order of independent chiefdoms had gone for good and the Africans had to adjust their way of living to a new order.

The Village as a Unit in pre-White Times

Though there are earlier records of villages among related tribes, the earliest we have of the Yao are those of Livingstone.[1] In the records of his journeys up the Shire and the Rovuma Rivers, he states that the people lived in villages. Rowley's reports[2] of the Shire Highlands in 1861 show that the Nyanja were organized in villages similar to those of to-day, but the best reports on the Yao village are by Duff MacDonald, who worked as a missionary in the Shire Highlands and the Zomba area from 1878 to 1881. Duff MacDonald published both a general ethnographic account of the Yao around Blantyre and a journal of day-to-day events on the mission. From these descriptions we are able to reconstruct much of the political organization of Yao groups before the Whites came to Nyasaland. Though the information from these early accounts about the internal structure of villages is scant, the reports of the importance of domestic slavery are good, and this is valuable in assessing its effect on the internal structure of modern Yao villages.

From MacDonald's description it appears that each Yao chiefdom was a congeries of almost autonomous villages. The headman of these villages recognized the superiority of one of their number whom we may call 'chief'. The unity of each village and its corporateness were expressed in many ways. One of these was in connection with the worship of ancestor spirits. MacDonald writes:

> [The village headman] is the recognized high priest who presents prayers and offerings on behalf of all that live in his village. . . . It

[1] Livingstone, D. and C., *Narrative of an Expedition to the Zambesi and its Tributaries, and of the Discovery of Lakes Shirwa and Nyassa. 1858–64*, John Murray (London, 1865). Waller, *Last Journals.*

[2] Rowley, *The Story of the Universities Mission.*

2: Mitchell E-5 (1946-1949) 1956 FT7 Yao FT7

175 622 is his relatives that are the village gods. Everyone that lives in the village recognizes these gods but if anyone removes to another village he changes his gods. He now recognizes the gods of his new chief. One wishing to pray to the god (or gods) of any village naturally desires to have his prayers presented through the village chief, because the latter is nearly related to the village god, and may be expected to be better listened to than a stranger.[1]

In this quotation the word 'chief' is used for village headman. In Yao the same term is used for both the chief of the country and the chief of the village (*mwenye*).

175 672 681 696 It is clear from MacDonald's description that foreign villages were looked upon as undifferentiated wholes. When discussing punishment in general he writes:

We find that almost every offence may be punished by death, but when an offender is not redeemed, the particular punishment is left to the headman of the injured party. For instance, if a headman of Kumpama's go and say, 'Chenyono has killed a subject of mine; I have caught a subject of his and want to kill him,' the chief's answer will be, 'He has done you wrong, do according to your heart (*poli mtima wenu*).' The punishment is thus inflicted not by the criminal's own chief, but by the injured party, and it may fall, not on the guilty person, but on one connected with him.[2]

For example, he describes how some children had been carried off from Che Lomoni's village one night in 1880.

Towards the end of 1880 [he recounts], Che Lomoni, a Blantyre headman, captured two men from Mpingwi, and put them in slave-sticks. They belonged to the village that had kidnapped the children a few months before, and native law did not require proof that the men were personally guilty. They were undoubtedly innocent. Still they were kept in close confinement till their friends returned the captives in February.[3]

175 622 The village headman—called the 'owner of the village' (*asyene musi*)—was the representative of the village in all public transactions, and also the representative of such higher authority as existed, to the village members. Duff MacDonald writes: 'A chief represents and is responsible for all his people. If anyone wish to treat with a native village it is with the village

[1] MacDonald, *Africana*, i, 65.
[2] MacDonald, *Africana*, i, 186.
[3] MacDonald, *Africana*, ii, 234.

2: Mitchell E-5 (1946-1949) 1956 FT7 Yao FT7

chief that he must deal. If we give a present to a village it is to the village chief that we must give it'; and, 'It is when a man transgresses against his own village chief that *personal responsibility* is brought home to him. When he transgresses against another village, his own chief pays for him.'[1] The village headman accepted liability for offences committed by his villagers against members of other villages, but could punish his own villagers by fines and by putting them into slave-sticks. Within the village, according to MacDonald, 175 622

> The headman cannot make his villagers hoe his farm for him, or do such private work. Neither does he exact tribute from them. . . . Still he expects them not only to stand by him in war, but to support his government on all occasions, and to render special assistance in the trial of judicial cases. . . . He may pronounce a capital sentence, or order as large a penalty as the fine of four slaves—especially if he be a higher headman. But his judgements may be complained of by any of his free subjects (only such appeals are rare, unless by parties that want to leave his village altogether). His decision may be revised by some other headman, as the ruler of the village from which his own settlement broke off; but the ultimate appeal is to the chief of the country. While the village headman settles all smaller disputes without troubling the chief, he usually reports graver cases.[2]

The Chief and the Village Headmen: the Political Process

The village headmen in any particular area recognized the superiority of one of their number, the chief of the land (*asyene cilambo*). MacDonald classifies the headmen under one chief as follows: 175 565 622 643

1. Chief's blood relatives, usually called 'younger brother'.
2a. Settlers or refugees (*alambi*) who have come over with a large following from a hostile chief.
2b. Men who have gained the chief's favour by their services and been sent to occupy new spots in the kingdom.

'Other village headmen arise when a large village increases and sends forth smaller hamlets.'[3] All in the territory of a chief were integrated by a chain of authority. As he explains,

> 1. Headmen are under higher headmen and under the chief.

[1] MacDonald, *Africana*, i, 186. Original italics.
[2] MacDonald, *Africana*, i, 153. [3] MacDonald, *Africana*, i, 156.

2: Mitchell E-5 (1946-1949) 1956 FT7 Yao FT7

175 2. Free men are under their elder brother in the first instance, but
565 they may carry their cases to the headman of their village or
622 even to the chief of the country.
643 3. Slaves were entirely under their own master.[1]

The headmen's subservience to the chief is described in the following passage:

> In all public transactions the headman represents his village. He receives the chief's orders and sees them carried out. When he kills an elephant he sends one of the tusks to the chief. Should he kill [651] twenty elephants he is not expected to give up twenty tusks—two or three would be sufficient. If he shoots a large buck he gives one haunch of venison. For all such tributes he expects to receive in return a present (generally a little powder). . . . He is expected to [646 attend the chief's parliament unless he is under an elder brother in 593] which case he is not allowed to speak, except when especially commissioned. Headmen are expected to report all cases of war, but they often attack enemies without telling their chief beforehand, saying, [721] 'Let him hear of the enterprise when it succeeds.' Yet this is dangerous unless they are sure of success, and well acquainted with the chief's private sentiments. On reporting an attack they present the chief with part of the booty. In times of war each headman when summoned, must follow his chief's flag, otherwise his village is burned [687] down, and all that fail to escape are killed or enslaved.[2]

175 Yet within the framework of this organization villages were
578 markedly autonomous. MacDonald's description, which I have
622 just quoted, brings this out very well. Elsewhere he writes:
643 'The chief may often have less influence than powerful headmen, and we have known cases where he simply contented himself with grumbling when his headmen acted contrary to his desire.'[3] The chief did not differ greatly from his more powerful headmen. A certain amount of ritual in terms of ancestor worship embellished his position, and he had some ascendancy over village headmen to whom he had given land. Yet, in the last analysis, the chief had to rely on his personal following and military power to subjugate headmen who were becoming too powerful. The chief was therefore in direct competition with his subject village headmen, and involved in a constant struggle with them for followers. MacDonald describes how the chief himself was a

[1] MacDonald, *Africana*, i, 155.
[2] MacDonald, *Africana*, i, 157.
[3] MacDonald, *Africana*, i, 155.

2: Mitchell E-5 (1946-1949) 1956 FT7 Yao FT7

village headman and had to administer his slaves and relatives in his village in the same way as a village headman.[1] MacDonald shrewdly observes :

175 578 622 643

> Where the chief sees occasion to interfere with his subordinates he generally consults his own interest. He will say to a headman, 'I see that you have been behaving badly to that subject of yours. You cannot get on with him: he must leave you and come and dwell in my own village.' The chief thus secures another servant.[2]

Another writer observed, 'As a chief's power consists of the number of his subjects the loss of a man is a serious matter.'[3]

175 622 643

A village headman also tried to strengthen his position against the chief and against other village headmen by attracting to himself as many followers and dependants as he could. The process whereby a man might increase his status is described as follows :

556 567

> However large the settlement may become, the man that is first in the field is the chief or headman. In course of time he adorns his position by acquiring wealth. He may shoot some buck and get possession of their skins. With these he goes to the Mangoni country and buys slaves. An old person he obtains for a single skin, but a young slave costs two, and women cost much more than men. The female slaves thus bought are his junior wives and he keeps them busy in hoeing the farm, and all such female duties. The male slaves he employs in farming, building, making baskets, sewing garments and such masculine pursuits. He keeps all these persons strictly at their duties, and at the same time welcomes an opportunity of selling them at a profit. If his daughters were unmarried, he would give them slave-husbands. The natives aim at 'replenishing the earth and subduing it'. As it is no expense for them to rear families, they are all desirous to have many children.

Besides this increase of the village from the chief's own resources, there may be an accession of freemen. After the settlement is begun, a man may come to its founder and say, 'I wish to live with you.' The village chief gives him permission and calls him 'younger brother'. The newcomer brings his family, builds a house, and cultivates a farm in the same way as his chief. A freeman may leave his present chief and take up his abode with another, whose subject he becomes. His former chief has no longer any authority over him

175 622 641 643

[1] MacDonald, *Africana*, i, 154. [2] MacDonald, *Africana*, i, 155–6.
[3] Hynde, R. S., 'Among the Machinga People', *The Scottish Geographical Magazine*, viii (1891), 656–63.

2: Mitchell E-5 (1946-1949) 1956 FT7 Yao FT7

175 622 641 643 whatsoever. But a man often decamps by night taking with him many slaves belonging to his fellow-citizens; he then goes to some influential chief who may be only too glad to give the fugitive ground and to establish him as a sub-chief. Freemen who thus leave are detested by their former chief, who welcomes every opportunity of shooting or capturing them.[1]

175 554 622 643 669 In this way village headmen, by increasing their following, increased their power against the chief. MacDonald records:

> When a person has acquired several villages, he becomes a higher headman, intermediate between the chief and the owner of a single village. Each headman lives in the village he likes best, and leaves his 'brothers' to manage his other villages. But a headman of great ambition often places his 'brothers' all around him, decides their cases, and practically governs a small kingdom of his own. If he lives far from his chief, one might suppose that he was quite independent. When a quarrel arises between the chief of the country and an important headman, the latter may rebel, and found a new kingdom, thus depriving the old chief perhaps of one-third of the villages in his dominion.[2]

MacDonald cites the case of Mkanda of Chiradzulu, who was at first a headman of KuMpama's but rebelled, and went to live on the southern side of the mountain.[3] He also observes that on the other hand, 'a headman may keep up his chief's authority in a district that the latter could not otherwise hold'.[4] Elsewhere he says:

> In and around his own village the chief of the country is a terrible power, and his government is supported by the most prompt and severe punishments. But in distant parts of his dominions, where influential headmen live, he may be little known, although as a matter of theory he is supposed to settle all graver disputes even in remote villages.[5]

175 643 The history of the Yao chieftaincies in MacDonald's time, and as told to me by my informants, is that of constant division into independent chiefdoms. In the Zulu and Bemba polities a strong state structure included a pattern of civil war and the main-

[1] MacDonald, *Africana*, i, 147–8.
[2] MacDonald, *Africana*, i, 32.
[3] MacDonald, *Africana*, i, 156–7.
[4] MacDonald, *Africana*, i, 157.
[5] MacDonald, *Africana*, i, 154–5.

2: Mitchell E-5 (1946-1949) 1956 FT7 Yao FT7

tenance of the whole state under a new king,[1] but the Yao 175
political units seem to have split into two factions when divisions 643
appeared within them. The dissident faction left the parent chiefdom and established itself somewhere else as an independent entity.

The picture my informants have given me substantiates Mac- 175
Donald's account, though his contact was mainly with Mangoche 439
and not with Machinga Yao. My informants, however, placed 484
greater emphasis than he did upon the importance of trade with 567
the coast. A slave-trading trip was not a venture which the 622
ordinary village headman could undertake with equanimity. 643
The journey to the coast, to Quilimane or to Kilwa, was long and arduous, and strong military protection against bandits was needed. A caravan could only be sent by a chief or someone of like status, so that the coastal trade became the monopoly of the chiefs. Headmen who had ivory and slaves to send to the coast included them in the chief's caravan. When it returned, the headmen were able to collect calico and beads to the value of their contribution. Gun-powder also seems to have been a chief's monopoly. Thus, in fact, he did have some physical control over the military activities of his subject village headmen, since he could withhold supplies of gun-powder if he wished. But in a society where minor chieftains were inimically poised against each other, the maxim 'a chief without people is nothing' had much more significance than it has to-day: a village headman's ultimate sanction was that he could withdraw his support from one chief and give it to another.

The Effects of White Conquest

It was into a society thus organized that the first Missionaries 175
came. I have already described how the Missionaries, by taking 643
in runaway slaves, and by occasional armed combat, entered 648
into political relationships with the chiefs. With the establishment of the Protectorate, the policy, clearly expressed in Sir Harry Johnston's letter,[2] was to stamp out slavery. This was done in numerous campaigns against the Yao chiefs [3] so that by

[1] See Gluckman, M., 'Succession and Civil War among the Bemba: An Exercise in Anthropological Theory', *Human Problems*, xvi (1954), 6–25.
[2] See f.n., p. 29. [3] See Chap. II, pp. 29–30.

2: Mitchell E-5 (1946-1949) 1956 FT7 Yao FT7

1896 the superior British militia had completely subjugated all the Yao chiefs who had resisted them.

British power initially became merely an element in the political relationships of chiefs: they used it against their rivals, as Kalembo used it against Cingwalungwalu,[1] or Malemia against Kawinga. Yao chiefs did not unite in the face of their common enemy.[2] As the campaign against the slave-traders progressed, however, Yao chief after chief fell to superior British arms. They, who only a few years earlier were accepting the submission of refugees, themselves had now to 'grasp the leg of the White people'.

It is clear that they looked upon their submission to the Whites in much the same way as they looked upon the submission of refugees to themselves. To submit to a man was to accept slave or near-slave status. According to informants, Kawinga sent a large tusk of ivory[3] to the British as a placatory gift. His ceremonial knife, and the knives of his important headmen, were taken from them by Robert Codrington, Assistant Collector of the northern part of Zomba.[4] A chief with whom I was once discussing slavery expressed neatly the attitude of the Yao chiefs to their subjugation. He said: 'There is no slavery to-day—we are the slaves of the Government'. The chiefs who returned to the Protectorate, therefore, returned as subjects, and were fully aware of this. In the new regime, the former chiefs had to recognize a superior authority and the British Administration provided the framework within which the old rivalries had to be rephrased.

The chief's position in relation to his subjects as a result of this catastrophic change was, of necessity, weakened. When the slave caravans stopped, the chief's source of wealth disappeared, and with it much of his power. He was no longer much wealthier than his subjects. The wants of the people could now be more easily satisfied by the numerous trading stores which

[1] Mitchell, J. C., 'The Political Organization of the Yao of Southern Nyasaland', *African Studies*, viii, 3 (Sept. 1949), 141–59.

[2] Johnston maintains that Matipwiri, Jalasi and Kawinga had planned a joint attack against the British in 1895. If this is so, the attempt was completely unsuccessful. See Johnston, H. H., *British Central Africa*, Methuen & Co. (London, 1897), 130. See p. 30.

[3] *The British Central African Gazette*, ii, 18 (Nov. 15th, 1895), reports that Kawinga sent in some ivory as 'indemnity' but was told to pay more and to send in 60 more guns.

[4] They are to-day in the Southern Rhodesia National Museum, Bulawayo.

2: Mitchell E-5 (1946-1949) 1956 FT7 Yao FT7

began to appear in the Territory. The chief in this situation had the same wants as his subjects but was in no way able to satisfy them. He was precluded by his position from becoming a labourer and thus securing a cash income, while his subjects, until recently dependent on his monopoly for their wealth, had been drawn into the new economy of the Protectorate and were comparatively affluent.

The cessation of warfare and slavery thus affected the prestige of the chiefs seriously. The Administration's policy was at first to impose a fine of guns on those who broke rules. In July 1894, for example, Chapola village on the south-west corner of Lake Malombe was fined 30 guns for being in possession of slaves.[1] Later the Administration introduced an ordinance requiring the registration and licensing of guns, and many guns were confiscated on account of breaches of this regulation. Not only were the Yao disarmed, but the Administration also punished those who broke the peace. At the same time the Government was pursuing an active policy against domestic slavery. For example, in the village of Chapola mentioned above, 26 slaves were released. The slaves, formerly bound to their masters by the physical sanction of being liable to death at his hands in cases of desertion, were now liberated. It is not surprising to find the Collector at Mlanje reporting, in 1895, that the power of Kuntirimanja and Matipwiri was failing, and that they were losing people.[2]

Statements of informants confirm that slaves were then starting to leave their erstwhile masters to set up villages of their own. In 1904, the Administration reported: 'The tendency is for the old large communities to be broken up; for the small man to collect a surrounding of friends and go off and build new hamlets in other localities'.[3]

From my own investigations, there appear to have been two possible reasons for this. First, communities may formerly have lived in consolidated groups in order to protect themselves from slave-raiders and other assailants. With the disappearance of the slaver and of war, the bond of the need for security would,

[1] *B.C.A. Gazette*, i, 10 (July 28th, 1894).
[2] *B.C.A. Gazette*, ii, 8 (June 15th, 1895).
[3] *The Annual Report of the Territory, 1903–4*, quoted by S. S. Murray (ed.), *Handbook of Nyasaland*, Crown Agents for the Colonies (London, 1932), 188.

2: Mitchell E-5 (1946-1949) 1956 FT7 Yao FT7

175 567 621 648 therefore, be weakened, and the component parts of the village scattered. This is what the Administration argued when it wrote about the split-up of communities: 'This tendency is to some extent gratifying, in that it originates in the native's sense of his complete security under the existing Government.'[1] I have not much evidence that this is true, and in fact do not think it is. Second, there is little doubt from my village histories that the slave-groups attached to various village headmen were deserting their former masters and setting up independent villages.

175 361 621 648 It is significant that the report speaks of the 'old large communities'. Duff MacDonald, writing of the Blantyre area in the period 1877–81, says: 'Usually the natives live in small villages containing 10 or 11 huts, occasionally in large villages containing three times as many. They do not like to pack themselves closely. In time of peace few villages contain more than 100 people.'[2] Hynde, writing of the Domasi area, says: 'Sometimes a village consists only of five or six huts; more commonly twelve or twenty and rarely above thirty. The chief's village at Domasi consists of more than 100 houses but that is an exceptional case. The villages occur at intervals of quarter to one mile.'[3] In July 1895, the Collector at South Nyasa made a census of all the villages on the west bank of the Shire (64 villages). These were mainly Yao, but also included some Nyanja. The modal size of villages, calculated from his published figures, is 26 huts.[4] The reports of MacDonald and Hynde agree well, although they describe different areas. The Collector's average was slightly larger, but one is not sure that he has not included two or three settlements under one headman. A village, Changali, was marked as having 217 huts, but a note indicated that they were scattered. Also the numerical accuracy is not above question because a large proportion of hut totals end in 0 or 5, indicating estimation rather than enumeration. From my own observation, the arithmetic mean of a sample of 37 villages in two separate areas was 11 huts (mode was 8 huts).

It seems, therefore, that the optimum size for Yao villages has always been about 10 to 15 huts, and that the disintegration

[1] *Annual Report of the Territory, 1911–12*, Murray, *Handbook*, 128.
[2] MacDonald, *Africana*, i, 145.
[3] Hynde, R. S., 'Among the Machinga People'.
[4] *B.C.A. Gazette*, ii, 3 (Sept. 1895).

2: Mitchell E-5 (1946-1949) 1956 FT7 Yao FT7

noted by the Administration in 1904 was in fact the break-up of larger communities under important village headmen. These communities were, as is evident from MacDonald's writings, largely made up of slaves and their descendants. In the light of the internal structure of modern villages, I believe that the fragmentation going on at that time was due to the breaking of the bond between captor and slave—a bond formerly reinforced by physical sanctions that included the killing of a slave by his captor. Therefore, while the groups thus linked to the headman may have moved out of his village, his matrilineal kinsmen, who were bound to him by bonds of deep sentiment and religious beliefs, remained. The irreducible 10 to 15 huts were therefore likely to have been those of the headman's own matrilineal kinsmen. When the Administration ascribed the continuing tendency all over the Protectorate to the splitting up of villages into small family groups [1] it was probably describing the splitting off of descendants of slave-wives to found villages of their own. While this process of readjustment was going on, the Administration stepped in with legislation designed to control what it considered to be unchecked social disorganization. The Administration spoke of the necessity to

175 361 621 648 175 621 648

> build up an organization to control the rising generation of natives who, finding themselves without the restraining influences to which their parents were accustomed, have of recent years evinced an inclination to emancipate themselves from the disciplinary responsibilities of village life and obedience to authority, and to adopt habits prejudicial to native family life.[2]

To accomplish this task the Government introduced the District Administration (Natives) Ordinance of 1912. This was the Ordinance about which the Administration wrote in 1913:

> Framed, as it has been, in accord with native ideas and practice, it is a measure which none the less avoids the defects of the archaic system of tribal rule and which has as its aims the gradual formation of a subsidiary local government by means of Sectional Councils of Headmen chosen as far as possible by natives themselves and presided over by the District Resident.[3]

---

[1] *Annual Report, 1911–12*, Murray, *Handbook*, 128.
[2] *Annual Report on the Protectorate for 1912–13*, Murray, *Handbook*, 129.
[3] Murray, *Handbook*, 129.

2: Mitchell E-5 (1946-1949) 1956 FT7 Yao FT7

175 621 648 Under this Ordinance, the Administration provided first of all for the formation of 'villages'. A Rule made under Section 3 of the Ordinance and published in Gazette Notice No. 113 of 1913, gave the Resident the power to concentrate the native population, where necessary, into organized villages of not less than 20 huts and to disallow the erection of isolated huts. 'In order to give effect to this policy the erection of new huts was to be confined to existing villages, and the occupants of isolated huts were to be instructed to remove, as opportunity offered, to an approved village.'[1]

175 622 648 The Ordinance then proceeded to create a line of authority from the District Resident to the villagers through Village Headmen and Principal Headmen. Districts in the charge of Residents were divided into Administrative Sections. A Principal Headman was put in charge of each. The Sections in turn were sub-divided into Village areas (groups of villages), each in the charge of a Village Headman.

Under the Ordinance, Principal Headmen and Village Headmen were given specific duties and responsibilities in their respective areas. The Principal Headman, for example, was:

> to be responsible for the good order of his Administrative Section, the maintenance of discipline, the reporting of crime and the apprehension of criminals, sanitation, the control of the movement of cattle, reporting outbreaks of epidemic disease, and for any other matters in the interest of law and order and the general welfare of the native community.[2]

The Principal Headman was also to 'secure the attendance at the Magistrate's court of natives whose presence was required in connection with deceased estates, remittances, government labour and so on, and to exert his influence to accelerate the payment of hut and poll taxes'. These duties in turn devolved upon Village Headmen—they were responsible for their smaller areas as the Principal Headmen were responsible for the larger.

Unfortunately we have no information about the way in which Principal and Village Headmen were chosen. Murray records that

> Residents were not necessarily to recommend those natives who had hitherto been recognized as Chiefs or Headmen. It was considered

[1] Murray, *Handbook*, 132. [2] Murray, *Handbook*, 130.

2: Mitchell E-5 (1946-1949) 1956 FT7 Yao FT7

that in some cases the previous records or age of such persons would be found to be such as to preclude their selection to transact the responsible duties of Headmen under the Ordinance, and in such circumstances Residents were to consider the claims of other natives of good standing, intelligence and reputation residing in the section, who, having assisted the Resident in native administrative matters in the past, might be expected to carry out the duties efficiently, and who, at the same time, were known to enjoy the confidence of the natives with whose supervision they were entrusted.[1]

Elsewhere Murray writes, 'The system introduced by the Ordinance was in no way intended to revivify or perpetuate government by native chiefs. The position of Principal Headmen under the Ordinance was in no sense to be similar to the archaic one of the chief.'[2] Yet in the area in which I worked it was precisely the traditional chiefs who were made Principal Headmen—Jalasi, Nyambi, Kawinga, Liwonde and Malemia. In retrospect it is difficult to see how it could have been otherwise. Considering the sentiment attached to the chief in Yao society, it seems scarcely possible to conceive of leaders who 'enjoyed the confidence of the natives with whose supervision they were entrusted' who were not chiefs in the traditional sense.

In spite of its avowed intentions not to 'revivify or perpetuate government by native chiefs', the Administration proceeded to invest the traditional chiefs with its own power. 'Residents', Murray writes, 'were to indicate carefully by their attitude towards and dealings with Principal Headmen the fact that they were officially recognized as chiefs of their respective sections and that, as such, they were entitled to the respect and obedience of their people.'[3]

It would be wrong to imagine that the military actions at the end of the last century had completely destroyed chieftainship. Those who had resisted the Whites were driven out of British Territory but were allowed to return very soon afterwards. These chiefs then took up the threads of their life as best they could under the changed conditions. The degree to which the new Administration had become a force in Yao politics is illustrated by an entry in the District Book in Zomba. Kawinga III had died in August 1905, and the record reads: 'There were two

[1] Murray, *Handbook*, 131.
[2] Murray, *Handbook*, 130.
[3] Murray, *Handbook*, 130.

2: Mitchell E-5 (1946-1949) 1956 FT7 Yao FT7

175 claimants to the succession, Kumlomba and Chiwalo. Their
622 claims were really very equal and His Majesty's Commissioner
(April 1906) called in Kumlomba and the most important
643 headmen and decided the succession by their vote.' District
648 Books have many entries dating before 1912 showing that the Administration did not consider chiefs and village headmen insignificant.

The appointment of village headmen needed the approval of the Provincial Commissioner, but presumably the recommendation came from the District Resident. It is reasonable to suppose that the District Resident in turn had discussed appointments with the principal headmen. Whatever the mechanics of the appointment, however, the outcome was that most village headmen who held positions of prestige in the indigenous system of ranking became village headmen under the Ordinance.

The District Administration (Natives) Ordinance thus made official the unofficial relationship which had previously existed between the Administration and the chiefs and the village headmen. The traditional relationship of chief to village headman and village headman to villager, however, became suffused with a new significance. These relationships had become part and parcel of the extensive administrative organization of the British Empire.

The Modern Administrative Structure [1]

The Native Authority Ordinance of 1933 and the Native
648 Court's Ordinance provide the legislative framework for the
642 modern administrative system. Under Section 23(*a*) of the
643 Native Authority Ordinance, the rules, orders, proclamations, notices and appointments made under the District Administration (Natives) Ordinance were not repealed. The duties which had so long been incumbent upon chiefs and village headmen, therefore, continued unaffected.

The chief, however, was set up at the centre of a bureaucracy and given autonomy in a number of directions. The Native Court's Ordinance gave him legal powers to inflict punishment on his subjects; the treasury under his authority could raise

[1] I have dealt in some detail with the position of the chief in the modern situation in my article 'Political Organization of the Yao of Southern Nyasaland'.

2: Mitchell E-5 (1946-1949) 1956 FT7 Yao FT7

funds and could spend them. The chief could make rules and regulations in specific matters. 648 642

Burnt-brick court houses, burnt-brick offices and clinics have appeared at the traditional headquarters of the chiefs. A court clerk collects court fees and fines, issues receipts and records the cases in a register. A tax clerk issues licences and collects taxes, receives correspondence addressed to the chief and writes the chief's replies. In addition, there are other functionaries—community workers, forest guards, agricultural demonstrators, sanitary inspectors, market clerks, well inspectors and so on. 643

In other words, the position of the chief is becoming more and more that of an administrative head-of-department.[1] His position *vis-à-vis* his subjects is coloured by this. The chief is at once the people's representative to the Administration and the Administration's representative to them.

[1] Compare Barnes's statement about the Ngoni: 'the great warrior chief has become in effect the only member of the Administration who never goes home to Britain on leave'. Barnes, J. A., *Politics in a Changing Society*, 172.

2: Mitchell E-5 (1946-1949) 1956 FT7 Yao FT7

361
133

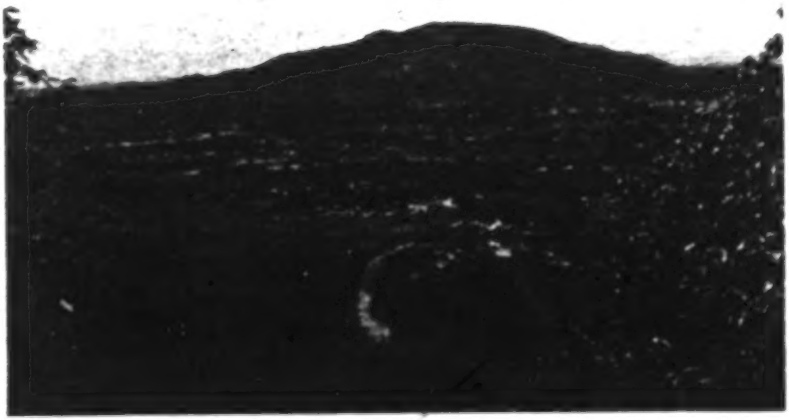

(*a*) Villages on the floor of the Rift Valley near Fort Johnston.
(*December 1949*)

(*b*) A village in the Domasi Valley near Zomba.
(*September 1949*)

PLATE III

[facing p. 46]

CHAPTER III

THE COMPOSITION OF MODERN CHIEFDOMS

Chiefdoms in the Administrative Mould

361 NO less than in MacDonald's time, modern chiefdoms are in the first place organizations of villages. Physically, the villages consist of solid pole and daub huts of varying sizes. Some huts are rectangular, twenty feet long and fifteen feet wide, [342] with glass windows, panelled doors, and thatched roofs. Others are small and round, about eight feet in diameter. There is also a considerable variation in the compactness of villages: often the huts are only a few yards apart, but sometimes at least a hundred yards or more. Most villages, however, could be circumscribed by a circle of a quarter-mile diameter, though, of course, there are many exceptions. There is a slight tendency for the village to spread itself along a path, in a way faintly suggesting ribbon development, but on the whole there is no particular physical pattern to the Yao village. In fact, though most villages have fairly distinct physical boundaries, and are definitely discrete clusters of huts, some are difficult to identify in this way. To the minds of the local people, however, the 621 village is quite clear and distinct. This is because they see the village primarily as a social unit, and tend to impute into physical boundaries more definition than actually exists. It is in the social sense that I use the word here: the 'village' is a spatial group which recognizes its identity against similar groups.

The importance of the village in Yao structure can hardly be over-emphasized. Membership of a village provides the first index whereby people determine a stranger's background. If, after village membership is fixed, no other links can be found with a stranger, such as distant kinship, the relationship will remain at that level. A gossip identifies the person about whom 621 he is speaking by giving his or her name and the name of his 551 or her village. He says, 'Bt.[1] Mwana of Cigwaja village'.

[1] I use this abbreviation for the Arabic 'binti', 'daughter of'. Binti, pronounced 'biti' by the Yao, with Ali and Wadi, 'son of', appear commonly in Yao names.

2: Mitchell E-5 (1946-1949) 1956 FT7 Yao FT7

The chief identifies a man who comes to see him in exactly the same way, and the Administration has adopted a similar system, except that it has its own definition of the village. During the initiation ceremonies, the initiands [1] are housed in long grass sheds which are subdivided into sections. Each section or room of the long shed houses the boys or girls from one village. If villages share a burial ground, they have allotted portions where they bury their dead separately. In these and many other ways the village is looked upon by the Yao as a distinct unit in the chiefdom.

The chiefdom in the old days was distinctly a territorial unit and all the villages within that area recognized the superiority of the chief. The boundaries of the old chiefdoms were marked by rivers and hills and fixed after conquest and agreement. They are still well remembered. Modern chiefdoms are defined in their limits partly by Government decree and partly by custom. When Principal Headmen were appointed, the districts under them were demarcated with 'due regard being given to the composition of the Native population'. The traditional areas under the various chiefs, therefore, were recognized by the Administration as districts, so that the districts or their sections almost coincided with the chiefdoms. Some disputes between chiefs over boundaries have occurred from time to time and the Administration has had to arbitrate. For example, the Provincial Commissioner of the Southern Province reported a difference between Liwonde and Kawinga in 1936,[2] but through time these differences have been eliminated.

Traditional and Administrative boundaries do not coincide in a few places, for two reasons. Firstly, the Administration has accepted an obvious and physical boundary in preference to an indistinct and social boundary. It has taken the Domasi River as the boundary between Ntumanje and Mposa, though in fact a few villages under Mbela, Kawinga III's son, live on the south side of the river, and fall for Administrative purposes in Ntumanje's area. Mbela is still very strongly associated with Kawinga in ritual and kinship matters. His dealings with the

[1] I am grateful to Prof. Schapera for suggesting this word for those who are undergoing initiation ceremonies. The parallel is with graduands, i.e. those who are undergoing graduation ceremonies.

[2] *Report of the Provincial Commissioner, Southern Province* (1936), 20.

2: Mitchell E-5 (1946-1949) 1956 FT7 Yao FT7

631
643

Administration, however, must be through the chief Ntumanje.

Secondly, some discrepancy has arisen because the Administration has not recognized all the indigenous chiefs. This has occurred mainly in Jalasi's area where there are at least two headmen who as far as I can judge were chiefs in their own right before the British conquest. These are Mkumba and Namwera.

Mkumba was the father of Nkata, the original Invader of this area whose chieftaincy later took the name of Jalasi. Mkumba moved into the southern part of Nkata's chiefdom where he settled. Nkata occupied the north. As far as I can gather, Mkumba held rights to the ivory in his area and made sacrifices for rain—the main attributes of chieftainship. He still holds both types of initiation ceremonies and tries cases not involving large compensation. Nowadays, the office still commands some respect, though the present incumbent himself is not highly respected. The village under him has broken up since his accession.

Namwera came into the area before the White invasion with a small following from Mataka's area in Portuguese East Africa. He obtained chieftaincy rights over a large tract of land. Though I have not been able to check this in Government records, informants tell me that he was originally a Principal Headman, but that he was deposed largely because of the intrigues of Jalasi III with a Government clerk. Nowadays, Namwera claims to be independent of Jalasi and is markedly hostile towards him. The village headmen who came into the area still recognize Namwera's authority and take their cases surreptitiously to him, if they do not involve compensation. But as far as the Government is concerned he is merely one of Jalasi's headmen, and if it comes to a trial of strength, Namwera will have to recognize the authority of Jalasi.

In general, however, the Administrative system, in incorporating the main indigenous chieftains, incorporated the indigenous organization in its framework. Kawinga as a Native Authority is the superior of Chiwalo, his 'sister's son'; of Chamba, his 'son'; of Mpoja, his 'brother's son'; and of Ngokwe and Chikweo who came to seek his protection. Kawinga holds his position both by virtue of his indigenous rank as a descendant of the original Invader Kawinga, and also as a Government representative. Liwonde, also a Native Authority, resists Kawinga's

2: Mitchell E-5 (1946-1949) 1956 FT7 Yao FT7

claims to primacy, and by the ideology of the kinship system is equivalent in status. In Jalasi's area, once again, the indigenous status of the chieftaincy is shown by the Administrative recognition of Jalasi against Mkumba, who was a minor chief, and Namwera, who had come to 'ask land from Jalasi', and who had to give some slaves and some ivory for his chieftaincy rights in the area. 631 643

The relationships of Native Authorities to each other to-day are thus fixed partly by the Administrative structure, and partly by their historical backgrounds, and I have indicated that the structure the Administration imposed in the Yao areas was very largely determined by the indigenous structure which existed at that time.[1] The Administrative system to-day, therefore, supports the traditional structure.

The five chiefdoms with which this study is concerned stretch from Zomba in the south, almost to Fort Johnston to the north-east of the Shire River. These chiefdoms are Malemia in the north of Zomba district, whose area lies along the Malosa range of mountains north of Zomba as far as Mount Chaoni. Liwonde district stretches from Mount Chikala and Mount Chaoni in the south to Mount Msili in the north. This district contains the chiefdoms of Liwonde and Kawinga and the minor chieftains under them. In Fort Johnston district which stretches from the north of Mount Msili to Lake Nyasa are the chiefdoms of Jalasi, Nyambi, Katuli, Makanjila and an Nyanja chief Nankhumba. The chiefdoms of Jalasi and Nyambi abut those of Kawinga and Liwonde, and it is with these that we are mainly concerned. 631 643 131

Malemia, whose clan-name is *amwale*, was apparently the first of the Machinga chiefs to move into present-day Nyasaland from present-day Mozambique.[2] His group moved south-west past the north end of Lake Chiuta and settled for a while on Mount Msili. Malemia was closely followed by Nkata, from whom the Jalasi chieftaincy developed and whose clan-name was *ambewe*, and his 'father' Mkumba, who moved in westwards past the north end of Lake Chiuta into the Mangoche Highlands. Here, together with the help of Kawinga and Liwonde, they attacked the so-called Mangoche chiefs (Mlumbe, Chikowi, Kapeni, 631 643 175

[1] Chap. II.

[2] The history of this chieftaincy is set out more completely in 'An Outline of the Social Structure of Malemia Area'.

2: Mitchell E-5 (1946-1949) 1956 FT7 Yao FT7

631 Matipwiri, etc.), displaced them southwards and so established
643 chiefdoms of their own. Mkumba moved to the south and
175 Nkata set up a fortress on Mount Mangoche, from which vantage-point he resisted British conquest for many years. Kawinga and Liwonde, whose clan-name was also *ambewe*, had moved in with Nkata but continued across the Shire River to settle in the Kongwe Hills to the west of Lake Malombe. Later, Kawinga and Liwonde re-crossed the Shire and moved south-eastwards until they reached Mount Chikala. This in the meantime had been occupied by Malemia. Kawinga and Liwonde succeeded in dislodging Malemia who retired to the Malosa Range, where he is situated to-day. Liwonde then left the mountain to settle on the east shore of the Shire River.

631 The arrangement of these particular chiefdoms in Administra-
643 tive districts therefore reflects the social relationships among the chiefs. Between Malemia and the two *ambewe* chiefs, Kawinga and Liwonde, there is an uninhabited forest reserve and a mountain range. Liwonde and Kawinga who can trace their descent
[611] matrilineally from a common ancestress and who are to-day perpetual[1] brothers, together with their minor chiefs, share the Liwonde district. In spite of the opposition of these two chiefs which arises from their position as chiefs of independent chiefdoms, they sometimes meet and visit each other. Chiwalo, who from the Administrative point of view is under Kawinga, is in fact more closely related to Liwonde and has much more to do with him. But Chiwalo's headmen usually appeal to Kawinga, not Liwonde, in their difficulties. Within Kawinga's area at a funeral or an installation ceremony of an important headman in the northern areas, representatives of the nearby chieftaincies Ngokwe, Chikweo, Chiwalo and Kawinga will be present. In the south, the representatives of only Chamba, Mposa and Kawinga are likely to be present. Headmen, if they come from Liwonde's area, do so because of kinship connection and not because they are representatives of Liwonde.

The relationships of Jalasi and to some extent Nyambi, with Kawinga and Liwonde, are much more distant. Kawinga and Liwonde stand opposed to Jalasi in spite of the fact that Jalasi shares their clan-name. I have never known of Jalasi coming to visit Kawinga or Liwonde. Jalasi's area extends well down

[1] i.e. the offices are fixed perpetually in this relationship. See p. 122.

2: Mitchell E-5 (1946-1949) 1956 FT7 Yao FT7

the Shire River to within about 15 miles from Liwonde's headquarters, and though he frequently tours his chiefdom in this area I have never known him to cross his boundary. The position of Nyambi here is interesting in that originally Nyambi's chiefdom was part of the Liwonde district. It was made part of this district in the early days of the Administration when Nyambi II, Nkata's sister's son who founded the chiefdom, opposed the reigning Jalasi and moved into the area where the chiefdom is now situated. The implication of Nyambi's being in Liwonde district was that he had to sit on District Councils in Zomba with Kawinga and Liwonde instead of with Jalasi in Fort Johnston. I understand that since the original Nyambi died his several successors have made requests to the Administration to be included in the Fort Johnston district. Finally in 1948 the request was granted and Nyambi's chiefdom was once more linked with his perpetual son's in Fort Johnston district. 631 643

The opposition of the chiefdoms as wholes appears in other situations as well, often when it is not expected. For example, there are two tobacco markets in the area studied. One is in Nyambi's area and the other is about 25 miles away at Mlomba's village in the extreme south of Kawinga's area. Mlomba is a uterine brother of the present Kawinga. Chiwalo's chiefdom abuts Nyambi's and tobacco growers need to transport their produce only six or seven miles to the market in Nyambi's area. Yet several growers told me that they were taking their produce the 25 miles to Mlomba market because they felt in some vague way that the Chiwalo people got lower prices for their tobacco in the Nyambi market than the Nyambi people.

The cleavage between the chiefdoms is also expressed in their religion. Kawinga, Liwonde, Jalasi and Nyambi are all Moslems and very few of their followers are Christian. Malemia is a Christian and very few of his followers are Moslems. But between Kawinga and Liwonde on one hand, and Jalasi and Nyambi on the other hand, there is a cleavage in terms of a schism among the Moslems. One group, the *twaliki*, became centred at Jalasi's court village Majuni. The *twaliki* believe that Islamic devotions should be accompanied by loud singing and chanting of Arabic tracts and by particularly vigorous dancing. Even at funerals this type of prayer is required. The other sect, the *sulutu*, centred at Kawinga's and Liwonde's court villages, 631 643 795

2: Mitchell E-5 (1946-1949) 1956 FT7 Yao FT7

631 advocates the more orthodox type of Islamic devotion in which
643 a quiet restrained manner is emphasized. As far as I know the
745 *nwaliki* sect are confined entirely to Jalasi's chiefdom and the *sukutu* to Kawinga and Liwonde. In this matter, Nyambi's people side with Kawinga's and Liwonde's.

On the other hand, local informal organization is well de-
631 veloped so that Chiwalo who is at the point of juxtaposition of
643 Kawinga, Liwonde, Nyambi and Jalasi chiefdoms, may try cases
692 involving headmen from any of these areas, and they usually accept his arbitration. His is the nearest court house. The actual boundaries of the four areas, however, are very clearly recognized and Chiwalo realizes the limits of his jurisdiction. Though he may arbitrate in a difference between headmen, he would not dare to apportion land outside his area. Headmen living on the boundaries of two chiefdoms arbitrate in each other's cases; the villagers under them intermarry. A village in Chiwalo's may
621 procure garden lands in Jalasi's area, and children may be initiated
631 at ceremonies held by headmen in other chiefdoms. There is no
643 clear break in the normal social relationships of people across the boundaries of chiefdoms, and their members interact as freely with each other as members of two villages of the same chiefdom. The cleavage between the villages on different sides of the boundary of a chiefdom becomes apparent only in special situations.

631 The formal relationships of the chiefs, set by the history of their conquests and their kinship, and incorporated in and slightly
643 modified by the Administrative framework, are overlaid by an informal local organization where the interaction of village headmen only conforms to the formal pattern when no agreement can be reached.

The Position of the Modern Chief

643 In ritual situations a chiefdom is clearly differentiated from its neighbours, and many of these situations arise in the cult of
769 tendence on the ancestor spirits. The ancestor cult has fallen
782 away almost completely among village headmen, but among the chiefs it is still strong, and appears particularly in the rain-prayers and the initiation ceremonies. Later, I shall discuss at length the importance of the chief's sanction before headmen may conduct initiation ceremonies. This is because the spirits

2: Mitchell E-5 (1946-1949) 1956 FT7 Yao FT7

of the ancestors of the chief are supposed to affect the welfare of the initiands. Though some village headmen may conduct initiation ceremonies they are unable to offer rain-prayers. These are offered by a chief on two occasions. The first is in November, before the rains have started. The chief's wife and some women from the bigger villages in the near vicinity of the chief's village gather at his hut. They brew beer—*ukana wacisoka*, the beer of the spirits—to be used as a libation. At sunset on the appointed day the chief goes to the shrine tree where some headmen have gathered, and pours some of the beer into a pot, partly buried at the root of the tree, while he invokes all the spirits of his departed ancestors—mainly matrilineal but occasionally some patrilateral. He then entreats the spirits to send some rain and to look after their 'children' in the land. Sometimes a length of calico is hung on the tree as an extra offering. Should no rain fall the chief will have to repeat the offering until it does fall. When the rains have ended in March he makes a second offering 'of thanks'.

In the context of the present discussion, the important point is that it is only the chief who can make this libation and offer this prayer. If his plea fails the whole area starves, and no headman may supplicate his ancestors on his own behalf or approach the chief's ancestors through his own ancestors. The grain for the beer comes from the various villages, but not on a fixed rate of levy. Some villages never contribute. The chief buys the offered cloth on behalf of his people. When in 1948 the cloth on the shrine tree was stolen, Chiwalo imposed a levy on the village headmen in the area so that a new cloth could be bought. Here the boundaries of the chiefdoms are important, and no headman outside Chiwalo's area was approached. A village headman from Jalasi's area, though geographically much closer to Chiwalo, relies on Jalasi's rain-offerings and may not approach Chiwalo or plead with him to offer a rain-prayer to his ancestors.

Another ritual situation in which the limits of the chiefdom appear is during the institutionalized pillage on the death of a chief. I have not been in any area when the chief has died, so that I rely here on the tales of informants. During the mourning rites certain feasts are held. The food for the mourning feast of a commoner or village headman is provided from his estate

2: Mitchell E-5 (1946-1949) 1956 FT7 Yao FT7

766 by his relatives. For the feasts during the mourning at a chief's
661 death the food is acquired by institutionalized pillage (*cipinimbe*). The villagers in a chiefdom are often first informed of the death of a chief by the appearance of men from his village. These men are by custom allowed to take from a village any article of food they can find—flour, a goat, some chickens, prepared relish, or whatever is lying around in the village. The owners of the food may not charge them with theft. This food is used in the funeral feast. The excesses to which the chief's men may go became circumscribed after the White conquest. Previously, almost any crime short of murder could be committed under the guise of *cipinimbe*. More recently, owing to Government opposition, it has been restricted to the taking of smaller articles of food, such as flour and chickens. Some people are beginning to object even to this. The chief's funeral is a public affair and all his subjects may attend it. The effect of the *cipinimbe* is to bring together enough food for the chief's funeral feast. Here, as before, the chief's men may not cross the boundary for fear of reprisals, and the effect is to impose a levy in an informal way over most of the villages in the chief's area.

The Chief as a Symbol of Unity

643 The chief is a representative of his people and it is his par-
579 ticular duty to ensure their welfare and that of the chiefdom as a whole. His symbolic representation of the unity of his people is brought out clearly by his right to fines in cases involving bloodshed and arson. Strife and division in a chiefdom in the old days were likely to end in spilt blood and burnt huts so that the Yao associate bloodshed and hut-burning with dissension within the chiefdom.

684 Most other offences are against the individual and not the
685 chiefdom as a whole: the case is brought to the chief so that compensation may be awarded. Adultery and theft thus are definitely civil offences. Nowadays, a fine is imposed, but this is seen to be a White innovation, and the money from it is looked upon as 'Boma' money.[1] In disputes where blood has
682 been shed, however, the chief is entitled to fine the guilty party on his own account. The chief is said to be 'blinded' by the
683 blood and a payment must be made to him before he may 'see'

[1] i.e. Government money.

2: Mitchell E-5 (1946-1949) 1956 FT7 Yao FT7

again. In the past, disputes hinging on murder had this aspect, 682
though they were usually settled by a feud. Nowadays, of 683
course, all murder cases are lifted altogether out of the hands of the chief, but the special fine for bloodshed is still levied in cases of assault. When a man is convicted of assault in the chief's court he will have to pay three separate amounts: one to the victim as compensation, one as a fine to the Native Treasury, and one to the chief 'so that he may see again'.

A similar provision applies to cases of arson. When a case is 685
brought to the chief because a man has burnt another's hut, the 372
chief will say that the guilty man has 'brought a torch into his country'. The man convicted of arson will have to pay a special fine to the chief in the same way as the man who caused bloodshed. The association of the unity of the chiefdom with fire probably has some place in the attitude of the chief here. People who have come to a chiefdom as strangers are said to have come to 'seek the chief's fire',[1] and all the fires in the chiefdom are supposed to have been kindled from one flame. This expresses the unity of the chiefdom: the burning of the hut, therefore, symbolizes the introduction of discordant elements, as well as being a serious crime in itself.

The Chief's Judicial Functions

It is clear from MacDonald's writings that in pre-White days 692
the chief settled most of the serious disputes in his chiefdom. 643
Nowadays, this function of the chief has been given legal sanction under the Native Courts' Ordinance of 1933. 'A' grade courts have the power of imposing fines not exceeding £5, or 6 months' imprisonment and 12 strokes whipping; and 'B' grade courts may impose fines not exceeding £1 and imprisonment including hard labour not exceeding one month, but not corporal punishment. The Native Authorities, Jalasi, Nyambi, Kawinga and Liwonde, all have 'A' courts; the Subordinate Native Authorities, Chikweo, Ngokwe, Chiwalo, Chamba, Mposa, Mlomba, Stora, have 'B' courts. Only a certain proportion of disputes 692
is brought for trial in these Native Authority courts. This is 673
because, firstly, the Administration does not admit the legality of some disputes. Most of these centre on charges of witchcraft,

[1] A similar view of fire in the village context is discussed in Chap. V, p. 112.

2: Mitchell E-5 (1946-1949) 1956 FT7 Yao FT7

G95
342
516

PLATE IV

A dispute in settlement at Chiwalo's hut. The assessor is sitting under the veranda behind the pole. A village headman can just be discerned in the shade under the veranda. The commoners sit in the sun.

(*October 1948*)

[facing p.56]

692 but some also on having killed children by *ndaka*[1] (a disease
[673] caused by the mystical influence of sexual intercourse). Secondly, other cases not brought to the court are petty squabbles which do not involve heavy compensation. Examples of these disputes are personal quarrels, disputes over land ownership, petty theft and so on. The Native Authority's court handles mainly cases arising from adultery, which involve compensation varying from £1 10s. to £5; and theft and assault for which similar compensation may be payable. If the case is brought up to the
696 chief's court there is a mechanism whereby the compensation may be enforced. Ordinarily, in those cases which are not tried in the court house, there is no legal sanction behind the payment of the compensation, so that if a man defaults in payment no legal pressure can be brought to bear on him. It is for this reason that such cases are tried in the court house.

695 The cases are heard by the court assessors who call the wit-
693 nesses and cross-examine them. Sometimes a chief or his representative is in the court, as at Kawinga's court, but sometimes as in Chiwalo's court, the chief never comes to the court house at all. After the evidence is sifted, one court assessor takes the case to the chief and tells him about it. On the basis of the court assessor's analysis he awards compensation and imposes fines. The court assessor then takes this information back to the court house, reassembles the protagonists, and announces the chief's decision. The losing party has then the opportunity to appeal, first to the court of the Native Authority, if the case was tried in a Subordinate Native Authority's court, and then to the District Commissioner.

Cases tried by the chief in his extra-Administrative capacity are usually tried outside the court house. The same personalities take part in the trial but they act now with reference to a different set of values. The procedure is exactly the same, except that in Chiwalo's area the chief is present at the hearing. He sits somewhat aside from the main body of people but within hearing distance, weaving a mat or making nets while the case is being tried.

692 In minor cases, if either of the parties is dissatisfied with the
643 decision, he may take the case up to the chief for arbitration and, theoretically, may then take it from him if he is a Subordinate

[1] See Chap. V, p. 112.

2: Mitchell E-5 (1946-1949) 1956 FT7 Yao FT7

Native Authority, to the Native Authority, and eventually to the District Commissioner if the case is one which he will countenance. In practice, most cases reach the chief and go no further. Most people accept his decision. Thus the chief has important judicial functions. 692 643

The Chief as his People's Representative

In special situations where the welfare of the chiefdom as a whole has been endangered by an infringement of the mores, the chief may take action. For example, a chief prosecutes a village headman who allows a woman in his village to bear her first child before she has been through the *litiwo* ceremony. Every woman who becomes pregnant for the first time must undergo this ceremony, during which she is instructed in child welfare and child care. If she bears a child without undergoing the ceremony, she is said to have 'spoilt the country' (*ajalwice cilambo*), in the sense that she has besmirched its reputation.[1] 643 687 843

Chiefs usually call in magicians 'to smell out' those responsible for keeping back the rain.[2] When the rains fail as they did in 1948–9, their failure is held to be due to the magic of some evilly disposed person. It then becomes the chief's duty to call in a magician to indicate who this person is. The fees for this duty are paid by the chief himself on behalf of his people. 643 787 821

The chief also acts as a representative of his people when they are affected as a whole. For example, Nyambi called in a magician after man-eating lions had taken some of his subjects. This magician called for the hearth-stones and domestic utensils from all the villages in the area, and built them up into a pyramid over which he made some anti-lion medicine. This was to clear the whole chiefdom of man-eating lions. 643 789 731

Nowadays, the chief's representation of his people is seen most clearly in his position in the Administrative framework.[3] The chief represents the Administration to his people since they approach it through him. At the same time the Administration clearly treats him as the representative of his people and consults 643

[1] I was told in Mponda's area that the women undergo this ceremony *after* the birth of the child, but that it is still obligatory.

[2] *Kutawa ula*—lit. 'to tie or bind the rain', in the sense of to make it a prisoner.

[3] I have dealt with this aspect more fully in 'The Political Organization of the Yao of Southern Nyasaland'.

2: Mitchell E-5 (1946-1949) 1956 FT7 Yao FT7

643 him about the laws it intends to introduce which affect his people. The Administration transmits new Ordinances and Regulations to the chief and he must then relay them to the village headmen. When it advises the chief of a new law it thereby advises the people of his chiefdom.

The Origin of Villages in Modern Chiefdoms

195 621 We have thus far been looking at the chiefdom as an organization of villages united by their common interests in and association with one chief. But the villages that compose the chiefdom are not all equally closely integrated into the political structure. This is most clearly seen against the background of how the modern chiefdoms came into being.

175 621 563 By the time that the 1912 Ordinance was introduced the social composition of the chiefdoms had undergone some change from what it was before the White conquest. Before the White conquest the Yao chiefs had overcome the indigenous inhabitants of Southern Nyasaland. Some of these had been allowed to remain in the area as subjects. Others were enslaved. There were some Nguru, Nyanja and Mpotola village headmen who had come to seek the protection of the Yao chiefs.

175 621 166 During the conquest, the territory was thrown into confusion, and villages fled in abandon from their own into neighbouring chiefdoms both in Southern Nyasaland and Mozambique. When the Administration allowed the chiefs to return, most of the important village headmen and their followers returned with them. Kawinga, for example, was allowed to return, not to Mount Chikala but to the area immediately to the north of it. He brought back with him most of his important headmen who had fled with him to the country of the Mpotola chief Nkanyela, in Mozambique. Jalasi was allowed to return from Portuguese Territory in 1906,[1] not to his mountain fortress Mangoche, but to a smaller hill Sakalwe some miles to the east. He gathered round him a few of his important headmen.

When hostilities ceased, there was a certain amount of internal readjustment. Some villages which had fled to other chiefdoms in the Protectorate started to come back while others stayed behind. To-day there are villages here and there which had left their chiefdoms in the confusion and had then joined their present

[1] District Book, Fort Johnston.

2: Mitchell E-5 (1946-1949) 1956 FT7 Yao FT7

chiefs. Mpumbe's village, which in 1947 was about 2½ miles from Kawinga's court village Nanyumbu, was originally one of Jalasi's adherents. Mpumbe fled with many others when the British attacked Mangoche in 1896. He went to the place where Lake Amaramba spills into the Lujenda River in Portuguese East Africa. When things seemed more peaceful, Mpumbe did not return to Jalasi's area, but preferred to seek his son Ngongondo, who had fled with a section of the village to Kawinga's area. He found Ngongondo at approximately the present site of the village, and settled with him. Ngongondo later moved eastwards to his present home in the Liwonde area. Both village headmen have achieved a certain amount of prestige in their new chiefdoms. Mpumbe was once a court assessor of Kawinga, and now holds girls' initiation rights. They have lost all touch with their former chief and are most unlikely to return to him.

A considerable number of Kawinga's villages moved into Mposa's and Chamba's areas, when they returned to the Protectorate. Their descendants to-day say that they did so because the soil was better in those areas than in Kawinga's.

Shortly after the British expedition, i.e. between 1896 and 1900, the Portuguese Government launched a punitive campaign against the Africans along the Portuguese–Nyasaland boundary. Many thousands of refugees came pouring into the Protectorate. Most of these were Mpotola and Nguru. The great majority settled where they crossed the boundary, i.e. round Chiuta, and Ngokwe chiefdom arose from some of them. After the Portuguese campaigns ended many other migrants came into the area. All those I questioned gave Portuguese ill-treatment as the reason for their coming across.

During the first decade of the century the movement, as in the initial invasion, was predominantly south-westwards—from Lake Chiuta towards the Shire River and Highlands. Now, however, the movement is gradual. The first movement of a group may bring it just within the boundary. Then the next movement may take it to the south and west deeper into Nyasaland. Some of my village case histories show this. Table III sets out some movements within Kawinga–Liwonde area (except Chiwalo).[1] I asked about the place of origin of all the villages

[1] I use Kawinga–Liwonde area to include the chiefdoms Kawinga, Liwonde, Mposa, Chamba, Ngokwe, Chikweo and Chiwalo.

2: Mitchell E-5 (1946-1949) 1956 FT7 Yao FT7

TABLE III

MOVEMENT OF VILLAGES WITHIN KAWINGA–LIWONDE AREA

621
175
166

Losers: \ *Gainers:*	Ngokwe	Chikweo	Kawinga	Liwonde	Mposa	Chamba	Totals
Ngokwe .	—	—	7	2	—	—	9
Chikweo .	—	—	2	—	1	—	3
Kawinga .	—	—	—	27	1	20	48
Liwonde .	—	—	—	—	—	4	4
Mposa .	—	—	—	2	—	9	9
Chamba .	—	—	—	—	—	—	—
Totals	—	—	—	2	—	—	73 2

Totals above the diagonal represent movements south-westwards. Totals below the diagonal represent movements north-eastwards.

extant in Kawinga's section, which had arrived since the White conquest. My enquiries about the headmen who are recognized by Government were easy, but for those who are not recognized I had to rely on the memories of my informants and I know that many were left out. I am not aware of any bias, but realize that wide generalization from the figures is not safe. A glance at Map II shows that Ngokwe area is the most north-easterly area and Chamba the most south-westerly. The others are intermediate. Of the 75 villages only two had moved counter to this direction, i.e. from Mposa to Liwonde in a north-westerly direction.

I have no measure of the number of villages which have moved entirely out of the Kawinga–Liwonde area, either to other parts of Nyasaland or back to Portuguese East Africa. I have never heard of a village's moving back to Portuguese East Africa, though I have heard of their moving westwards and southwards, and of a few moving northwards.

In Table IV, I set out the origin of villages which have arrived in Kawinga–Liwonde area since the White conquest, and which are still there. This table shows quite clearly, that by far the biggest influx into these areas has been from Portuguese East

2: Mitchell E-5 (1946-1949) 1956 FT7 Yao FT7

TABLE IV

ORIGIN OF VILLAGES WHICH HAVE ARRIVED IN THE KAWINGA–LIWONDE AREA SINCE THE WHITE CONQUEST AND ARE STILL THERE 621 175 166

Origin	Ngokwe	Chikweo	Kawinga	Liwonde	Mpona	Chamba	Total
Northern Areas:							
Port Johnston . . .	—	—	—	6	—	1	7
Nyambi	—	3	—	1	1	2	7
Jalasi	1	—	10	6	1	3	21
Southern Areas:							
Malemia and Ntumanje	—	—	—	8	7	28	43
Zomba	—	—	—	4	7	4	15
South of Zomba . .	—	—	—	2	1	3	6
Other Nyasaland Areas:	—	—	—	3	—	2	5
Port. E. Africa . . .	13	76	111	37	6	30	273
Unrecorded	—	—	—	2	1	31	34
Total	14	79	121	69	24	104	411

Africa. We have no record of how many villages have been lost to the Southern or Northern area from Kawinga–Liwonde area, so that we cannot evaluate the significance of the gain of 64 villages from Southern areas, and of only 35 from the Northern areas. The density of population in Malemia's area is 268 per square mile, and the average density of the Shire Highlands is about 156·6. It may well be that there is now a movement out of the Shire Highlands into the less densely populated Liwonde–Kawinga area.

THE PRINCIPLE OF PRIMACY

Migration and invasion have been the keynote of Machinga histories: village headmen recount with pride how their ancestors moved into Nyasaland with their bands of slaves and followers. 'The East' is the traditional home of the Yao and even young men who have never been there proudly say, 'We come from the East'. This sentiment is reflected in the belief that the rains from the east are beneficial and give rise to good crops, while the rains from the west are detrimental and cause 173 821

2: Mitchell E-5 (1946-1949) 1956 FT7 Yao FT7

173 8a1 crop failures. Also I was told that important village headmen [726] are buried with their heads pointing to the east.

The Yao concept of the past is reflected in the principles of 173 political organization of these Machinga chiefdoms. The in- 554 vasion is the datum point from which rank mainly stems. We 622 may classify modern headmen into: those who were in the area before the Yao invasion, i.e. the Aborigines; the Invaders; and those who have come in since the invasion and have had to submit themselves to the Machinga chief, i.e. the Newcomers. The principle behind this classification of headmen is fundamental to Yao political structure. Stated most simply it is the rule that MacDonald quoted in describing the development of local organization: 'However large the settlement may become the man that is first in is the chief or headman.'[1] This is, of course, somewhat of a simplification, but the rule contains the essence of the principle. It was reversed for the Aboriginal Nyanja because the Yao subjugated them. But the claims of the Nyanja chiefs to rank because they had occupied the land first were recognized by the Yao who absorbed them into the social structure in positions of high rank.

425 But the principle holds among the Yao themselves, and for 554 the Nguru in their movements after the White conquest. The 622 operation of the principle is clearest in the structure of small local areas such as Chiwalo's. When Chiwalo's area was first settled, just after World War I, there were large tracts of unoccupied land. The first headmen to move into this region were Cigwaja, Kapaloma, Nyanje, Makata and Mumbwa. The local chief Chiwalo followed Cigwaja, but as Cigwaja was one of the Invader headmen under Chiwalo during the period of invasion, he now recognized Chiwalo as the chief. The area that is now Chiwalo's chiefdom was divided out among these five headmen. As other headmen came into the area they had to approach one of these five for land rights. These, when granted, were granted irrevocably in a block to the new village headman who then had sole rights to distribute the land afterwards. If he had the land to spare, he may have granted a portion of it to yet another village headman, and this action was also irrevocable. The land occupation pattern in any particular area is therefore extremely complex, because in addition to the village garden areas, indivi-

[1] MacDonald, *Africana*, i, 147. See p. 35 above.

2: Mitchell E-5 (1946-1949) 1956 FT7 Yao FT7

duals may hold garden plots in other village areas which they have temporarily borrowed in a private arrangement with the individual owner. But when the system is seen in relation to the pattern of occupation of the area, it is greatly simplified. Each garden may be traced back to the original owner through three or four village headmen. The pattern of the reversion of rights follows the same system. The garden land of a village which has recently moved in and is moving out again reverts directly to the village headman who granted it. If he has moved out it reverts back to the village headman from whom it was in turn acquired.[1] These original landholders form the central points of locally organized areas to-day. For example, in Chiwalo's area there is Chiwalo at the top of the scale, then there are Kapaloma, Cigwaja, Mumbwa, Makata and Nyanje as the most important village headmen, and they take precedence over any of the other village headmen. All the others who have come into the area since then, of whom many are Nguru, rank very much lower.

From the smallest village to the chiefdom as a whole, therefore, there is a series of overlapping areas of organization. In any particular area chosen at random in a chiefdom as large as, say, Kawinga's, there will probably be two or three small villages which recognize the primacy of one of their number. The headman of this village may be called in to arbitrate in disputes over land or personal quarrels or even in the private consultations held after the death of a village member (*mapeto*). But the superior headman in turn recognizes *his* superior who was in the area before him. This system is extended over larger and larger areas, each headman in turn recognizing some other headman who was in the area before him, until ultimately the primacy of the Invader chief over all his headmen is established by the same principle. There is no clear-cut district organization as among the Zulu and Bemba.[2]

[1] See also 'Preliminary Notes on Land Tenure and Agriculture among the Machinga Yao', *Human Problems*, x (1950), 1–13. This system of land-holding has been called 'estates of holding' by Gluckman. See his *Essays on Lozi Land and Royal Property*, Rhodes-Livingstone Paper, No. 10 (Livingstone, 1943), p. 29 ff.

[2] See the essays by Gluckman and Richards in Fortes, M., and Evans-Pritchard, E. E., *African Political Systems*, Oxford University Press for the International African Institute (London, 1940).

2: Mitchell E-5 (1946-1949) 1956 FT7 Yao FT7

554 These headmen who are the centres of local social structure
622 are the higher headmen that MacDonald mentions.[1] Many of
692 them to-day are the descendants of the traditional councillors (*nduna*) who were sent out to the extremities of the chiefdoms to be the outer governors in these areas.[2] Their villages are social centres in that many disputes are taken to these important headmen before they are taken to the Native Authority's court. For example, the dispute between the women of Nampeya and Cikuwita was taken to Ntibwilibwi.[3] The chief usually orders headmen to assemble at the villages of important headmen when he has directions to issue to them. Very frequently the Administrative officers camp there for the night on their tours and call
554 the headmen in to them for conference. The placing of mosques
622 at the villages of these important headmen also indicates their significance as social centres. Most Moslem villages have small
346 mosques which the more devout use for the morning and evening prayers during Ramadan only. At the villages of important headmen larger mosques have been built and these are used for the midday prayers on Fridays (*jumo*), when most of the Moslems in each area assemble in their best clothes for communal prayers. Large brick mosques have been built at the court villages of Jalasi, Liwonde and Kawinga. There are other large mosques at the villages of chieftains such as Chiwalo, Chamba, Mposa, and of important headmen such as Kangomba, Nyenje and many others. These chiefs and headmen were all Invaders and are, as I shall show later, almost by definition Moslems. They are also headmen of high rank so that the placing of the mosque, and the other features of local social structure, are largely derivatives of the system of ranking.

554 Rank therefore underlies the structure of local areas as well as
622 the structure of the chiefdoms as wholes. It is, as I show later, closely associated with the historical origin of the headmen. Yet the correlation is not perfect and I shall show that other factors tend to militate against the fixed historical ranking of headmen. Nevertheless, the principle of primacy is the most important single factor.

[1] See Chap. II, p. 36.
[2] See Chap. IV, pp. 92–3.
[3] See Chap. V, p. 130.

2: Mitchell E-5 (1946-1949) 1956 FT7 Yao FT7

The Characteristics of the Three Categories of Headmen

In Table V I have set out the ethnic affiliation of the headmen in the three categories and also the dates of arrival of Newcomers in the Kawinga–Liwonde area. This table shows that 622 563 167

TABLE V

Numbers of Village Headmen who are Aborigines, Invaders and Newcomers

Tribes	Aborigines	Invaders*	Newcomers							Total
			Pre-White	White Conquest—1907	1908–17	1918–27	1928–37	1938–47	Unrecorded	
Yao . . .	—	144	19	60	20	14	13	13	35	318
Mpotola . .	—	53	—	43	21	9	1	1	—	128
Nguru . .	—	5	2	46	58	49	27	14	17	218
Nyanja . .	25	3	1	4	6	1	1	4	1	46
Unrecorded .	—	—	—	—	—	—	—	—	6	6
Total . . .	25	205	22	153	105	73	42	32	59	716

* In Ngokwe area, 39 villages are classified as Invaders who came into Nyasaland as refugees from the Portuguese military actions at the close of the nineteenth century.

easily the great majority of villages has come into the area since the White conquest. On the other hand, only 3·5 per cent are Aborigines. Just over a quarter (28·6 per cent) are direct descendants of the original Invaders or headmen of villages which have branched off from these. The remainder (67·9 per cent) are the Newcomers who have submitted themselves to the Invaders. Far more Newcomers came in during the decade following the White conquest than in any of the more recent decades.[1] We cannot argue directly from these figures that the greatest influx of Newcomers into Nyasaland took place before World War I. Newcomers in the more recent decades may be as numerous but may be passing out of the area more quickly, and therefore are not recorded in my survey. On the other

[1] Nguru immigration in 1908–27 was due to exceptional causes.

2: Mitchell E-5 (1946-1949) 1956 FT7 Yao FT7

622 hand, all villages tend to disappear in time. We should there-
563 fore expect more of the headmen who came in during the
167 earlier decades to be forgotten, and the trend should be more pronounced than it is. In fact we know from other sources that immigration of the Nguru, who represent about one-half of the Newcomers, was greatest before 1930, and it is almost certain that the figures do reflect the change in the amount of Nguru immigration, and that the factors which may operate against the trend are not important. As a whole the set of figures suggests that immigration is slowly coming to an end.

622 The Aborigines are all Nyanja. Among the Invaders, 70·2 per
563 cent are Yao, 25·9 per cent are Mpotola, and the remainder 3·9 per cent are Nyanja and Nguru. The Mpotola Invaders are practically all in the Ngokwe and Chikweo areas, so that in the other areas (i.e. in Liwonde, Kawinga, Chamba and Mposa) the Yao represent 94·9 per cent of the Invaders; the remainder are Mpotola. Under Ngokwe and Chikweo who are Mpotola chieftains, 54·5 per cent (48 of 88) of the Invaders are Mpotola, and 37·5 per cent are Yao, and the remaining 8·0 per cent are Nyanja and Nguru. Among the 486 Newcomers, 35·8 per cent of the headmen are Yao, 15·4 per cent Mpotola, 43·8 per cent Nguru and 4·9 per cent are mainly Nyanja. In general, therefore, we may say that the Aborigines are all Nyanja; the Invaders are Yao in the major area and Mpotola in the other area; and the Newcomers are predominantly Nguru from Portuguese East Africa, though there is a fair proportion of Yao who have come from other Nyasaland districts.

622 There are significant differences among the three categories of
795 headmen in their religious affiliations. In general there are more
797 Moslems (71·8 per cent) among all headmen than Christians or Pagans. But there are more Moslems among the Invaders than among either the Aborigines or the Newcomers.[1] There are more Pagans among the Newcomers, but the proportion of Christians among the Aborigines and the Newcomers is about equal (25·0 per cent and 21·9 per cent). These differences in religious affiliations are consistent with the different historical backgrounds of the two groups. The Invaders are the descendants of the Yao slavers, who in the past had been in intimate

[1] Invaders = 91·1 per cent; Others = 63·9 per cent; Diff. of per cent = 27·2; S.E. of diff. = 3·7; C.R. = 7·2; $p < 0{\cdot}0001$.

2: Mitchell E-5 (1946-1949) 1956 FT7 Yao FT7

TABLE VI

RELIGIOUS AFFILIATION OF ABORIGINE, INVADER AND NEWCOMER HEADMEN

622
795
1947

Religious Affiliation	Numbers			Total	Percentages			Total
	Aborigine	Invader	Newcomer		Aborigine	Invader	Newcomer	
Moslem . .	17	184	296	497	70·8	91·1	63·5	71·8
Pagan . .	1	4	68	73	4·2	2·0	14·6	10·6
Church of Scotland .	3	10	59	72	12·5	5·0	12·7	10·4
Roman Catholic .	2	1	33	36	8·3	0·5	7·1	5·2
Other Christians .	1	3	10	14	4·2	1·5	2·1	2·0
Total . .	24	202	466	692	100·0	100·0	100·0	100·0
Unknown .	1	3	20	24				
	25	205	486	716				

Combining Roman Catholic and other Christian totals.
$n = 6$; $\chi^2 = 56{\cdot}48$; $p < 0{\cdot}00001$.

contact with the Arab slave-traders and had taken over Islam from them. To-day the chiefs are still frequently called 'sultan'. All the chiefs in the Machinga area are Moslems except possibly the Malemia who was installed in 1947. He was brought up as a Christian but the strong Islamic tradition behind his status is reflected in the star and crescent on his ceremonial headdress. The Nyanja, however, were influenced by the Missions from the start and the Nguru were not as directly concerned in the slave-trade and were therefore less affected by Islam. They have been easily converted to Christianity. Among them too there are more Pagans. The difference in religion here is largely a reflex of the political relationships of the headmen. In other words, the Yao stoutly maintain that they are Moslems merely because Islam is one of the distinguishing marks of the Yao and of the Invaders in particular. It would be difficult for some of them to maintain their point in face of strict Moslems, for many of

2: Mitchell E-5 (1946-1949) 1956 FT7 Yao FT7

622 them follow the tenets of Islam in only the most cursory way.
785 An Nguru therefore admits to being a Pagan more readily than
787 a Yao, because he cannot identify himself with the Invading group.

Kinship with the Chief

.622 The most important way in which the three categories differ,
643 however, is in the degree to which they are associated with the chief. While the Invaders are identified with the chief because of their association with him in the invasion, they are also tied to him to a greater degree by various kinship links than the other categories of headmen.

Although the exact composition of the Invading groups will never be known, it appears from the accounts of old men, that the groups were made up primarily of the chief and his younger brothers, together with their sons and slaves, and some unrelated followers. Other chieftaincies and village headmen have sprung from the chief's lineage. For example, Kawinga was the leader who brought the present Kawinga-Liwonde group into Nyasaland. The first man to be called Kawinga left the Lujenda River where he was living with an elder relative called Nsanama, whose exact genealogical connection I have never been able to determine. Accompanying them was Liwonde, a younger brother of Kawinga. As they passed through the country just west of Lake Chiuta they encountered the Mpotola under Chikweo, and these joined up with Kawinga and his relatives and went to Kongwe on the west side of Lake Malombe (in the present Kalembo's area). From this place they were displaced by the Ngoni and returned east and south to the Chikala Range where they displaced Malemia and occupied the heights. Subsequently, Liwonde left the mountain and went to live on the Shire River where the old Government station used to be. From this point on, Kawinga and Liwonde seem to have acted almost independently. Nsanama seems to have stayed with Kawinga. Chamba who was the son of the first Kawinga now set himself up as a chief on the south side of Chikala and Chaoni. Mposa, the son of the first Liwonde, moved to the shores of Lake Shirwa and set himself up there. Chiwalo, a sister's daughter's son of the first Kawinga, set himself up on the northern fringe of the area. Recently Stora, a sister's daughter's daughter's

2: Mitchell E-5 (1946-1949) 1956 FT7 Yao FT7

daughter's son of the first Kawinga, has been recognized as a 622
subordinate Native Authority. Village headmen also develop in
the same way from the relatives of the chief. Among the 205 643
village headmen who are of Invader stock, there are 62 who are

TABLE VII

PROPORTIONS OF RELATED AND UNRELATED HEADMEN AMONG THE INVADERS

Chief's Relatives						Non-Relatives	Total
Direct			Clan				
Mat.*	Pat.	Aff.	Mat.†	Pat.	Aff.		
17 8·3	35 17·1	10 4·9	37 18·0	22 10·7	12 5·9	72 35·1	205 100%
30·3%			34·6%			35·1%	

* Includes the six chiefs themselves.
† Those who have the same clan-name.
Mat. = Matrilineally related; Pat. = Patrilaterally related; Aff. = Affinally related.

either chiefs, their direct matrilineal relatives or their direct patrilateral relatives. This represents 30·3 per cent of the total. Of these 35 or 17·1 per cent are patrilateral relatives.

The chief's sons occupied a very strong position in the early 622
Yao chiefdoms. Most sons of the early chiefs were their children 643
by slave-wives. Since there was no one on their mother's side 644
from whom they could inherit rank, it follows that they could only expect to achieve status through their father, the chief. Yet they were not, as his younger brothers and his sisters' sons were, a danger to him, because they were not in the line of succession and had no reason to wish his death. On the contrary, the bonds that unite father and son in Yao society are strong but not formal. The chief's sons, the *acibwana*, therefore came to occupy some of the most trusted positions under him. They became his military leaders; they led his caravans to the coast and back; they were the messengers who represented him to foreign chiefdoms and to the Whites when they came. In these positions the chief could trust his sons, because he knew that they

2: Mitchell E-5 (1946-1949) 1956 FT7 Yao FT7

622 had no hostile axes to grind. Younger brothers and sisters' sons
643 might have used the military forces against him, or they might
644 have squandered the wealth of the caravans because they had a jural right to it. As the sons grew older they were given groups of slaves and slave-wives to look after, and so they became village headmen under the chief. Many of them came to have initiation rights and hold other positions of importance.

The chief was also connected to other Invader headmen through
622 marriage. It is clear that affinal links become in time cognatic,
643 but the marriage of the chief with a headman's sister fixes
602 the relationship between that headman and the chief in per-
601 petuity. The succeeding chief does not look upon the village headman who is his mother's brother's wife's brother as a father-in-law, as he would if he were a commoner, but instead calls him 'brother-in-law'. Also, all the successors of the village headman call all the succeeding chiefs by this term, so that the political structure of the area becomes phrased in a kinship idiom: the quasi-kinship of headman and chief in this context becomes suffused with political meaning. The number of village headmen who claim some affinal relationship to the chief is not great—only 10 of the total of 205 (i.e. 4·9 per cent).

TABLE VIII

PROPORTIONS OF RELATED AND UNRELATED HEADMEN AMONG THE NEWCOMERS

622
643
602

Chief's Relatives						Non-Relatives	Total
Direct			Clan				
Mat.	Pat.	Aff.	Mat.	Pat.	Aff.		
0 0	13 3·4	15 3·9	24 6·3	13 3·4	16 4·2	300 78·8	381 100%
7·3%			13·9%			78·8%	

Among the Aborigines and Newcomers, naturally, there are very few direct relatives. There are, of course, no matrilineal relatives. The patrilateral relatives amongst the Newcomers (3·4 per cent) are those of Kawinga who have moved into Chamba and Liwonde areas. There have been various mar-

2: Mitchell E-5 (1946-1949) 1956 FT7 Yao FT7

riages between the chiefs and Newcomers and as a result there are 3·9 per cent of the Newcomer headmen who are linked affinally to the chiefs. The proportion of affinally-linked headmen in the two categories is approximately the same. The major differences are among the proportions of headmen linked by matrilineal and patrilateral ties to the chief. 622 643 602

Clanship with the Chief

A more numerous category is those who are related to the chief, not by common descent but by clanship. 622 643

Informants tell me that before the Whites came to Nyasaland, each person took the clan-name of his mother. People who had the same clan-name were said to be 'of one kind' (*lukosyo lwamo*). The word *lukosyo* had no other meaning but 'kind' or 'sort', and the word *mtundu* is frequently used as a synonym. If a man is asked his *lukosyo*, he is as likely as not to give the reply 'Yao' or 'Machinga', i.e. his tribal origin. By extension it follows that if two people have the same clan-name inherited from their mothers, and their mothers in turn have inherited it from their mothers, and so on, eventually there must be a common ancestress. The two people therefore call each other 'brother'. However, among the Yao there are no stories of the origin of clans and only vague traditions of a common clan ancestress. I often questioned Yao about their clan-names and joked with them that though they were Invaders they shared the same clan-names as their subjects. The clan-names I found among the Machinga Yao were *apiri*, *amilasi*, *ambewe*, *abanda*, *asimbiri*, *amwale*, *angoma*, and these clan-names also appear among the Marawi group of tribes (Cewa, Manjanja, Cipeta, Mbo, etc.), the Lakeside Tonga of Chinteche district, and the Mpotola and Lomwe or Nguru from Portuguese East Africa. The Achisi Yao under Katuli, a group related to the Mataka Yao from Portuguese East Africa, do not have these clan-names, nor, as far as I know do the Yao in Tanganyika. Clan-names, therefore, may be a feature of the Machinga Yao in Nyasaland, acquired as a result of their contact with the Marawi and other indigenous peoples of that country. It is significant that the clan-names are not as a rule common Yao words for everyday objects in the same way that clan-names amongst, say, the Bemba of Northern Rhodesia, are names of plants, animals and other natural phenomena. The word 614 611

2: Mitchell E-5 (1946-1949) 1956 FT7 Yao FT7

622 *amilasi* is used for bamboos and once an informant when pressed
643 told me a tale of a group of people who in dire starvation ate
614 bamboo leaves and were thenceforth called after the bamboos. This story, however, was discredited by others and I pass it off as unimportant. There is, however, some evidence that the words *apiri amilasi*, *ambewe* and so on, are commonly used in Nyanja, and possibly amongst the Lakeside Tonga, who were once part of the Marawi peoples, for objects other than clan-names.

614 Informants say that people with the same clan-name could not
582 marry in the past,[1] so that the clan appears to have had the characteristics of an exogamous descent group. The position to-day is vastly different. Not only do people take the clan-names of their fathers, but many young people do not even know their clan-names at all.

614 At this point I should make it clear that the modern confusion
611 about clan-names is no doubt partly due to the emphasis placed on patrilineal descent by the purveyors of White culture, the
557 Administrators and the Missionaries, and also by the same emphasis in Islamic tradition which has influenced most Yao groups. Another factor in the situation is that slave descent still markedly affects social relationships in modern Nyasaland. Its significance here is that when a man took a slave-wife in the old days, his children by her took his clan-name, and not hers. Patrilineal descent of the clan-name therefore tends to point to the slave origin of a person. People who are able to point to a freeman ancestry are proud of this fact and are proud to be able to claim a clan-name associated with a long line of matrilineal ancestors, particularly if there were some well-known men among them. On the other hand, I found it a fairly safe indication that, if I could find no information about an ancestress, particularly her clan-name, then I was dealing with a group descended from a slave. A third factor is that some people
614 explained their lack of knowledge of a clan-name by the state
611 of social unrest and confusion at the end of the last century. As a result of the incursions of the Ngoni, Nguru and slave-raiding Yao and Arab groups, and finally the punitive expeditions of the British and the Portuguese, villages were destroyed and groups annihilated. People lost contact with their relatives, even

[1] Confirmed by Hynde, R. S., 'Marriage and relationship among the Yao', *Nyasa News*, vii (1895), 217-18.

2: Mitchell E-5 (1946-1949) 1956 FT7 Yao FT7

their parents. Therefore many people who were children then, but adult to-day, say that their parents were 'lost running from the wars' and that they were never told their clan-names. 614 611

Whatever are the factors which have led to the comparative lack of importance of the clan-name in the social relationships of commoners to-day, the clan-name has preserved its significance in the political structure. I have already said that the clan-names associated with particular village headmanships and chieftaincies are well remembered, and this fact is not without significance. It seems likely that the clan-name was used in earlier times by groups as a method of claiming protection. The same set of clan-names appears throughout the tribes which surround the Machinga Yao. It seems likely that the adoption of clan-names facilitated their incursion into the country, and it is certain that insurgent Yao groups have used the clan-name as excuses to move into an area, and gradually to extend their dominance over it. 614 622 643

For example, in Malemia's area there is an Nyanja village headman called Nyani, who has the clan-name *amwale*. Stannus reports that when Malemia moved into this area he claimed brotherhood with Nyani because of the clan-name, and was able to obtain from him the land extending from the Likwenu River to the Namadsi River, a district 30 to 40 miles long.[1] Again when Kawinga fled from Chikala after the British raids on it, he went to the land of Nkanyela, an Mpotola chief in Portuguese East Africa, who is also an *ambeuve*. That the clan-name is used essentially in this political field is illustrated by the relationships of Mposa to Mbande. Mposa, the son of Kawinga I, settled in the country of the Nyanja chief Mbande, who had the same clan-name as Mposa, viz. *amilasi*. Mposa calls Mbande 'brother' to-day and Mbande holds a position of honour and rank in Mposa's chiefdom. It is significant that other village headmen such as Cilombo, Mbalika and Mkwinda also have the same clan-name, but they do not claim kinship to Mposa. In modern times, when there is no longer any great danger to be incurred in moving from one part of the country to another, it seems likely that the necessity for some mechanism, whereby the friendship of otherwise hostile groups could be secured, falls away. In other words, the significance of the clan-name is gradually disappearing as its functions atrophy.

[1] Stannus, 'The Wayao of Nyasaland', 237.

2: Mitchell E-5 (1946-1949) 1956 FT7 Yao FT7

614 601 Relationship may be claimed not only through having the same clan-name, but also by patrilateral and affinal clan ties. For example, one of the early Kawingas is supposed to have married an *abanda* woman. Therefore Chikweo, whose clan-name is *abanda*, calls Kawinga 'brother-in-law' (*alamu*). Some of Kawinga's village headmen also call him brother-in-law because of the clan-name. Ngokwe, whose clan-name is *asimbiri*, had an *amilasi* father, so that many of his *amilasi* headmen call him 'son'.

614 622 643 Here, as before, there are more Invader headmen who claim to be clan relatives of the chief (34·6 per cent) than Newcomer headmen (13·9 per cent) (see Tables VII and VIII). Once again the proportion of headmen who claim affinal links to the chief is approximately the same in the two categories and the main difference is in the proportions who have the same clan-name and who are clan-patrilateral relatives in the way I have explained. I have mentioned that though many headmen have the same clan-names as the chiefs or the clan-names of the chiefs' fathers, they do not all claim to be clan-relatives of the chiefs. There is no reason to suppose that the distribution of clan-members is different between the Invaders and Newcomers, so that it seems likely that more Invaders claim the clan-relationship to the chief when they can, than do Newcomers.

Unrelated Headmen

622 643 The striking difference between the two main groups of headmen is in the proportion not related to the chief. Among the Invaders only 35·1 per cent of the headmen cannot claim some kinship link to the chief. Among the Newcomers, however, roughly double that proportion (78·8 per cent) are in this position. Among the Invaders some of the unrelated headmen hold positions of importance by virtue of their independence of the chief. These are the *nduna* whose functions I describe later.[1] Among the Newcomers, however, there are no *nduna*, so that this difference between the categories is one of the most important.

In Tables VII and VIII I have omitted a total of 105 villages, 93 of which were small villages whose relationship to the chief I did not record. All these villages were settled in distant and inaccessible places and I asked about them from the chiefs and

[1] Chap. IV, pp. 92–3.

2: Mitchell E-5 (1946-1949) 1956 FT7 Yao FT7

their councillors at the courts. If they were relatives of the chief it is almost certain that he would have mentioned them. We may assume then that the true proportion of unrelated headmen among the Newcomers is, as we would expect, very much greater than among the Invaders. 622 643

Of the total of 424 Administrative villages there were ten in which I did not record the formal relationship to the chief. In Table IX I set out the proportions in these categories among the Administrative village headmen, and there is no radical difference between these proportions and those for all village headmen. 622 643 602

TABLE IX

PROPORTIONS OF RELATIVES AND NON-RELATIVES AMONG ADMINISTRATIVE HEADMEN*

	Chief's Relatives						Non-Relatives	Total
	Direct			Clan				
	Mat.	Pat.	Aff.	Mat.	Pat.	Aff.		
Invaders . .	18 (13·2)	23 (16·9)	6 (4·4)	24 (17·6)	11 (8·1)	9 (6·6)	45 (33·1)	136 (99·9%)
Newcomers .	0 (0·0)	9 (3·5)	12 (4·7)	20 (7·8)	11 (4·3)	12 (4·7)	193 (75·1)	257† (100·1%)
Total . .	18	32	18	44	22	21	238	393

$n = 6$; $\chi^2 = 90·5$; $p = 0·0001$.

* This table excludes the 21 Aborigines.

† Excludes 10 villages for which I have not recorded this information.

To summarize, we may characterize the Invaders as Yao, Moslems, and associates of their chiefs by historical connections and kinship ties. The Newcomers and the Aborigines on the other hand are of different tribes. They have more diverse religions, are not connected to the chiefs by kinship ties as closely as the Invaders are, and do not share with them the strong bond of being co-Invaders. It is in the struggle for prestige and rank that these bonds with the chiefs assume significance. 622 643 602 563 554

2: Mitchell E-5 (1946-1949) 1956 FT7 Yao FT7

CHAPTER IV

PRESTIGE AND RANK AMONG THE VILLAGE HEADMEN

The Political Process as the Struggle of Headmen for Rank

622
554

THUS far I have been describing the composition of the three categories of headmen: the Aborigines, the Invaders and the Newcomers. This classification is fundamental to the system of ranking among them, and is the most important single factor. But rank among village headmen is determined by other factors as well. We may summarize the most important of these thus:

A. *Rank from association with the chief.*
   1. Accompanied the chief during the Invasion.
   2. Kinship with the chief.

B. *Rank from opposition to the chief.*
   1. Prestige from another area.
   2. Large following.

The struggle of the headmen for power and prestige, both among themselves and against the chief, constitutes the political process. This is expressed mainly in the competition for various symbols of prestige. In this process, village headmen may use whatever connection with the chief they can, in order to gain his favour. They may use their direct kinship or clanship with him, or some more nebulous connection, such as the friendship of their fathers with him, or they may play upon the history of the association of their village with his ancestors in the invasion of the country. If they cannot exploit some link with the chief in their struggle for prestige, they may press their claims on the basis that their villages are large, and that if they are frustrated they may move their allegiance to another chief.

The historical fact of being of Invader stock is clearly a major determinant of rank. Invaders always have the advantage over the Newcomers because of their historical association with the chief. They are more closely bound to him: they participate

in the ritual of the chieftaincy more than Newcomers do; provide the chief's councillors; pay rain-levies and in other ways express their closer tie with him. But there is no rigid class structure based on tradition. All villages are liable to break up. If for any reason the village's internal cohesion begins to weaken, its members scatter and it disappears as a political entity. Invader as well as Newcomer villages may thus disintegrate. The smaller sections of an Invader village which now set up villages of their own have to compete with the larger and more united villages of Newcomer origin. Another facet of the political process, therefore, is the continual competition of village headmen who are trying to maintain the unity of the villages under them, and to increase their following, so that their status against the chief and the other village headmen may be enhanced.

622 554

Marks of Rank

In the vernacular it is the *name* of the village which is said to be important.[1] This name is usually taken from the founder of the village and is assumed by a new village headman when he succeeds to the position: when a new village is founded the headman gives it his name to distinguish it from the parent village. But the importance that is ascribed to a name is clearly the importance of the corporate group which it represents. The headman is an incumbent of a social status, the prestige of which is drawn from the corporate group which he represents in his public dealings.

103 622 554

The prestige of village headmen is shown particularly in the degree of deference accorded to them by other village headmen. The headman with the highest prestige is of course the chief: the original leader of the Invaders. Below him may be ranked the rest of the village headmen in a relatively fixed pyramidal hierarchy, determined by a number of factors which I shall outline later.

554 622 643

The dress of important headmen is often an indicator of prestige but this criterion is not infallible nowadays when labour migrants, craftsmen and tobacco growers can afford to buy better clothes than many headmen. But it is usually a fairly safe guess that when a man carries a long stick and is dressed in long flowing

292 554 622

[1] *Lina lya kuhugwa*—lit. 'the name is great'.

2: Mitchell E-5 (1946-1949) 1956 FT7 Yao FT7

622 robes (a gown not unlike a woman's dressing-gown), wears a
554 bright-coloured turban, and has one or two men walking behind
292 him, he is a rather important village headman. One particular item of clothing in the Kawinga, Liwonde and Nyambi areas, is the scarlet headband which some village headmen may wear. I shall discuss this later in the context of the competition of village headmen for rank.

622 Another external characteristic of rank, which seems to have disappeared with the changing economic structure of Nyasaland,
554 was the carrying of knives (*nsinjo*) by important village headmen.
411 Previously, status was indicated by the type and size of knife carried in public. The chief usually carried the largest and most ornate. The knife taken from Kawinga on his surrender in Portuguese East Africa was about 18 inches long and had a decorated ivory handle. Smaller knives of similar pattern belonged to his headmen.[1] Nowadays, many young commoners carry knives two or even three feet long, made from the broken blades of motor-car springs.

622 The right of important village headmen to build fences[2] at the back of their huts is also a mark of prestige which seems to
554 have lost its significance. About 50 years ago only important
351 headmen had the right to erect a fence at the back of their huts. This fence, made of tall grass about six feet high, enclosed the
[567] grain stores and other food supplies of the household and formed a private compound in which the headman's wife and slaves carried on their daily tasks.[3] It seems likely that private compounds and slavery were positively associated, so that only the important village headmen who had many slaves found it necessary to build fences. All chiefs and most important headmen to-day still erect these fences. Those who hold initiation
[88] rights are obliged to build them because, when the initiands return from the seclusion phase of the initiation ceremony, they are supposed to spend one night in the headman's private compound before going back to their villages. But nowadays, minor village headmen and commoners also frequently build these

[1] See f.n. 4, Chap. II, p. 38.

[2] *Lutenje*, pl. *ndenje*. The enclosed space or 'compound' is *cimbundi*. Typical hut compounds are depicted on Plate IX (*a*) and (*b*), facing p. 206.

[3] MacDonald suggests that the common term *hunyeto* for woman is derived from the adverb *hunyeto*—on the other side (of the fence).

2: Mitchell E-5 (1946-1949) 1956 FT7 Yao FT7

 622

compounds, especially in areas where there are man-eating lions,[1] 554
so that it is no longer an infallible indicator of the hut-owner's 351
rank.

Minor village headmen always allow their superiors to sit on 622
a chair. If village headmen of commensurate status are present, 554
chairs may be sought for them all. But a minor village headman 576
never occupies a chair, even if one is available, in the presence of his superior. At a meeting, for example, a chief occupies a chair and so may his most important *nduna* or councillor. The more important headmen sit alone on separate mats, for a man only shares a mat with his equals, and then only rarely. Junior headmen, however many there are, have to try to squeeze themselves on to one mat or squat on the ground.

Important headmen also have the right of walking in front of their juniors. If there are three or four headmen returning from, say, a court case, they arrange themselves in the pathway in an order which reflects their rank. As they file down the narrow field paths the leader is the most senior among the group. After him come the other headmen and last of all the commoners. This order of precedence is also followed when initiands pass through the tribal initiation ceremonies. The sisters' sons and other matrilineal descendants of important headmen precede those of the less important headmen. At Chiwalo's hut also, I [695] have noticed that the more important headmen sit under the verandah while listening to private cases. The less important headmen sit with the commoners under a shelter or out in the sun.

I have been discussing the visible marks of prestige. But high 622
rank also tends to carry with it some other privileges which are 554
not immediately observable. The most obvious is Government 648
recognition. I have already mentioned that under the 1912 Ordinance, village headmen were recognized by the Administration. These Administrative village headmen, who had certain duties to perform, were paid a small annuity and were in earlier days given a 'book' in which the tax payments could be recorded. To-day, the Yao still describe Government recognition as 'having a book'. Administrative village headmen derived more benefit from Government recognition than merely an

[1] The huts in Plate IX (*a*) and (*b*) are in Namwera area where there are man-eating lions. Most huts have compounds. A large proportion of huts in areas where there are no lions also have compounds.

622 554 648 annuity. This recognition publicly announced their superior status, because not all headmen could be Administrative headmen. We do not know exactly how the Administrative headmen were appointed when the Ordinance was introduced. The observable results, however, are that no headman, as far as I am aware, who was of superior status in the indigenous ranking system, is not an Administrative headman to-day. Being an Administrative headman is then in itself an indicator of rank.

622 554 643 415 769 881 Rather more important than this is the right to hold initiation ceremonies. MacDonald says that these rights were held by the chief only, but it is not clear whether the word 'chief' used here refers to the village headmen or the 'chief of the land'. Nowadays, the rights are held by village headmen as well as the chief. The right to hold initiation ceremonies is signified by the possession of a small flat basket (*ciselo*) in which the oblational flour for the ceremonies is carried. When a chief grants a *ciselo* or oblational basket to a village headman, what in fact he does is to grant him permission to approach the spirits of his ancestors. The headman uses the basket on three occasions during the initiation ceremonies. First, before the ceremony is announced he pours a little cone of sorghum meal at the root of a special tree in or near the village. This tree is known as the *nsolo*, or the shrine-tree where all offerings to the ancestors are made. While he works the flour through his fingers to allow it to fall in a cone, he calls on his ancestral spirits and asks them to intercede on his behalf with the spirits of the chief's ancestors. He then formally requests permission to hold the initiation ceremony. This cone is left intact through the night. Should it collapse the interpretation is that the spirits are not willing that the ceremony should take place and it is postponed for some days. Offerings are made until eventually the cone, by remaining intact through the night, indicates that all is propitious for the ceremony

622 554 643 415 881 to be conducted. The second occasion when the oblational basket is used is when the village headman or chief goes down to the grass sheds where the rites of segregation and aggregation take place. Here he pours flour over a twig and begs the safe conduct of the initiands through this physically and mystically dangerous period. Third, each individual initiand, and his or her mother, is touched on the forehead and forearm with the flour on the evening that the initiands leave for the grass sheds. During

2: Mitchell E-5 (1946-1949) 1956 FT7 Yao FT7

the last rite the owner of the oblational basket exacts a payment of threepence or so from each parent. The headman does gain financially from the initiation ceremony, but it would be wrong to imagine that this is the only reason why he should want to have the right to hold it. The competition for the rights, which are limited to a few, is part of the general political process whereby village headmen compete for privileges and advantages over their fellows.

Village headmen may hold either the boys' or the girls' initiation ceremonies, or both. Sometimes, when they hold both, they delegate the girls' ceremony to a younger brother or some other relative without referring to the chief. For example, Kawinga's clan relative and important retainer, Ngalawanga, had the rights to both initiation ceremonies, and he allowed his perpetual 'son' Isa [1] to hold the girls'. Also in Nyambi area, Majaja, who had both initiation rights, allowed his perpetual 'son' Nantunga to have the girls' ceremony. It is generally conceded that the right to hold the boys' initiation ceremonies is more valuable than the right to hold the girls'. H. L. Duff, writing in 1906, had also noticed this when he wrote:

> The respective ceremonies seem to be considered as on a somewhat different footing, for the boys' *inyago* can properly be held only at the village and under the patronage of, so to say, the paramount chief of the neighbourhood, whereas the girls' initiation may take place under the auspices of an inferior headman. This distinction is still jealously observed and any breach of the chief's privileges is apt to lead to bitter dispute.[2]

The sanction the chief holds over the headmen in this respect is mystical. A village headman believes that the initiation will be a success (that is, that the initiands will be free from the harm of wild beasts and illness, or the circumcision wounds of the boys will heal quickly and well), only if the approval of the chief's ancestors is obtained. He cannot hold the initiation ceremonies, unless he has obtained the basket from the chief.

Most people still follow tribal initiation customs, but in the extremes of the area in which I worked, religious ideas are bringing about a change. In the north in Jalasi's area where Islam

[1] The first Isa was the son of Ngalawanga and this relationship is preserved by the modern incumbents of the headmanships. See Chap. V, p. 122.

[2] Duff, H. L., *Nyasaland under the Foreign Office* (London, 1906), 312.

2: Mitchell E-5 (1946-1949) 1956 FT7 Yao FT7

881 is most powerful, there is a tendency for the Islamic initiation
178 ceremony for boys, *jandu*, and the Islamic initiation ceremony
795 for girls, *nsondo*, to displace the tribal equivalents, *lupanda* and
622 *ciputu*. These Moslem initiations are conducted by Moslem
554 teachers (*mwalimu*) and are not controlled by the chief. Though it also involves the circumcision of the boys, *jandu* is very much shorter and the boys are secluded for only a week. Some say it is becoming more popular because it is less expensive for the boys' parents. In Chiwalo's area the two ceremonies are run concurrently. The boys and girls go through the normal segregation rites at the beginning of the ceremony, but an *mwalimu* circumcises the boys according to Islamic practice. At the aggregation rites at the end of the period of seclusion, the star and crescent appears as one of the symbols along with the whale (*namungumi*), antelope (*mbalapi*), leopard (*cisuwi*), and the other tribal effigies which are shown to the boys. Christianity in the south has had a similar effect. The Missions actively discouraged initiation ceremonies in the past. Many of the people in Mposa's and Malemia's area have dropped the custom, or have integrated prayers and other parts of Christian ritual into the ceremonies, though circumcision is steadfastly retained. The effect of these changes is that the important ritual control the chief had over the ceremony has been undermined, and so the prestige attached to it has also begun to fade in these areas. What I describe about the prestige of village headmen and the rights they have to initiation ceremonies is only partially true, and is falling away daily. The correlation I seek to establish is also disturbed by the fact that among the Nguru there is a slightly different initiation ceremony (*cidodoto*) for boys. Most Nguru send their boys to the Yao initiations but there are still some who hold their own traditional ceremonies. These are not within the mystical control of the chief so that some Nguru headmen are outside the competition for the initiation rights. I should say, however, that most compete with the Yao for Yao initiation rights so that this factor is not as disturbing as appears at first sight. In addition, village headmen who move into a new area usually must obtain the permission of the chief before they may use the initiation rights they held before coming into the area.

622 There are other indicators of the general high rank of village
554 headmen. Junior headmen, like commoners, must give a special
576

2: Mitchell E-5 (1946-1949) 1956 FT7 Yao FT7

Arabic greeting to their seniors. This is done by placing the 622
left hand on the chest and bending slightly forward to the village 554
headman, saying, '*Subaye*'. The senior should then respond, 576
'*Alaye*'. Also, important headmen are usually buried in the
centre of the village, not in the common graveyard. The tomb 766
of an important headman or personage, usually built of stones, concrete or brick, is called *nsati*. The right to bury in the village must be obtained from the chief 'because the land is his', and in Kawinga's area a fee of 6*s*. must be paid to him.

The Struggle for Government Recognition

Thus far, I have been discussing the ways in which the rank of 622
village headmen may be expressed. I now describe the way in 554
which these marks of prestige are associated in the three cate- 643
gories of headmen we have distinguished, and in what way the
competition between them is phrased. I have already described 648
how all the chiefs in the areas to which I am referring are all successors of the original leaders of the invasions, and are usually the present Government representatives or Native Authorities.

The people must recognize the rank of chief because mystical beliefs prescribe activities in one direction, and because the limiting structure of the White Administration does so in another. A village headman cannot hold initiation ceremonies without the permission of the chief because of the mystical sanction, but the chief also has legal authority over his subject headmen. He as Native Authority is recognized by the Government and is its representative to his people. The Native Authority Ordinance (1933) specifically imposes penalties on those who do not recognize the authority of the chief. Under Section 12 of the Ordinance, the Native Authority may arrest without warrant any person who is accused of failing to obey his order or direction, interferes with his lawful duties, professes to be a chief or assumes the duties of a chief without Government approval. Under Section 13(*i*) severe penalties are imposed on any person who conspires against or in any way attempts to undermine the lawful power and authority of any chief or Native Authority. His position is therefore greatly strengthened against the village headmen and I have been told of one or two prosecutions by chiefs under this section. Nowadays, the mere threat of

2: Mitchell E-5 (1946-1949) 1956 FT7 Yao FT7

622 action under this Ordinance is sufficient to cow his opponents.
643 Therefore, the chief may also control the rise to power of his
554 headmen because he is a Government official. At the same time
648 a village headman may not move away to form a chieftaincy of his own: should he migrate with his followers nowadays, he will always find himself under a White system of Administration which upholds some other chief against him. The rank system must operate within a circumscribed framework and in reference to the chiefs.

622 I have already mentioned that being an Administrative village
554 headman is a mark of prestige. Most of the struggle for rank
648 revolves around this axis. Under the 1912 Ordinance, village headmen were only recognized if they had at least 20 taxable huts under them and they were paid a small annuity proportionate to the number of their taxable huts.[1] Before a headman could be recognized, therefore, he had to gather around him at least 20 tax-payers. After a headman had been recognized, the more villagers he could attract the higher his annuity. This situation is one with which the Yao headmen were long familiar. It is indeed the same process that went on before the Whites came, and that was outlined so clearly by Duff MacDonald, except that it is now cast in slightly different form. In consonance with the new money economy, superior status, marked by more dependants, brings a higher financial reward. But it would be false to imagine that the prospect of financial gain is the only spur to a village headman's attempts to enlarge his following. A headman of a large village as such, is still a 'big' village headman.

622 A headman who has sufficient followers to enable him to
643 press a claim for a 'book' goes to the chief for it. The chief
554 considers the merits of the case, but is unwilling to grant too
648 many 'books' in his area. If he supports the claim the matter is referred to the District Commissioner, who considers the application, not in terms of the indigenous struggle for rank, but in terms of general Administrative considerations, such as finance,

[1] A definite rate of remuneration was fixed in 1918: it was computed at 10*s.* for every 300 taxes. See Murray, *Handbook*, 142. Under the 1933 Ordinance the remuneration was fixed at 4*d.* per Government tax of 6*s.* to a village headman and 2*d.* per 6*s.* to a Native Authority. *Report on Native Affairs for the Year Ended 31st December 1933*, Government Printer (Zomba, 1934), p. 5.

2: Mitchell E-5 (1946-1949) 1956 FT7 Yao FT7

and the ease of administering groups with centralized authority. If he agrees, the necessary alteration is made in the tax-registers, and the new Administrative headman is paid his annuity and is called up by the District Commissioner whenever he holds a meeting. To the District Commissioner the chiefdom is made up of the villages on the tax-register, and in a situation of political importance he calls on the headmen of those villages for decisions. For example, when a chief was being installed, the District Commissioner called each Administrative headman forward and asked him whether he agreed to the succession. When the District Commissioner wishes to discuss any matter with a villager he calls forward the Administrative headman. The position of village headmen in the political structure becomes more effective after they have been recognized by Government.

I have no accurate measure of the proportion of all village headmen who are recognized by Government. From my records the percentage of Administrative village headmen out of the total of recognized village headmen is:

	No. Admin. Villages	% of Total recognized
Kawinga	160	84
Liwonde	104	71
Mposa	30	48
Chikweo	48	43
Ngokwe	21	40
Chamba	61	39

I have full records for the smaller chiefdoms, Mposa, Chikweo, Ngokwe and Chamba, but I know for certain that the figures for Kawinga and Liwonde are incomplete. My fullest and most reliable records are for Ngokwe and Chikweo, so that we may estimate roughly that less than half of the village headmen are Administrative village headmen.

Naturally the village headman, whose taxable population will be reduced by the granting of a new ' book ', opposes this in the same way as his ancestor opposed the emigration of his village members in pre-White days. In 1947, in Jalasi's area for example, there was an argument hinging on this.

2: Mitchell E-5 (1946-1949) 1956 FT7 Yao FT7

622 554 691 Mlima was a village headman of long standing and had been recognized as an Administrative headman. Ngwaya was a headman who had come to settle under Mlima.[1] After some years Ngwaya felt that because he had his own village he should be given a 'book' and receive money from the Government. Mlima however resisted the claim, saying that his 'book' had been given to him by Jalasi. Both went to Jalasi's court so that the difference could be resolved. Jalasi rejected Ngwaya's claim and upbraided him for being recalcitrant. Ngwaya was fined 9*s*. and ordered to pay £1 to Mlima in compensation.

622 554 643 A rather more complex case brings out the position of the chief, the Administration and the conflict of the prestige-giving principles of historical primacy and White recognition.

691 In 1948, an Administrative village headman, Kalonga, from Nyambi's area, decided to migrate down to the more fertile land along the banks of the Shire River. This land was in Jalasi's area, and it was partially occupied by a minor village headman called Malilo. Kalonga had already selected his site for the village when Malilo came up to him and told him that he was the first in that area and that Kalonga should have asked him to indicate a building site. Kalonga, on the other hand, pointed out that he was an Administrative headman and that Malilo was not, and there the matter rested. In time Kalonga, because of his official position, became better known than Malilo. Malilo was jealous of this prestige and in due course went to Jalasi and complained that Kalonga was 'getting too big for his boots'[2] and that he was only a Newcomer into that area. Jalasi sent for Kalonga.

At the dispute in front of the chief, Malilo reiterated his complaint. Kalonga merely pointed out that Malilo was jealous of his 'book'. Jalasi dismissed the case reminding the two headmen that it was he who was chief of the country. Shortly after this, Kalonga went to Jalasi alone and told him that Malilo had told him that he, Jalasi, was no chief because he should have taken the 'book' and given it to Malilo. Jalasi said, 'It is impossible to change over the "books" which are written by the Whites', and then sent a messenger to bring Malilo to court. When he came he denied the tale and said that as far as he knew the only reason for Kalonga's animosity could be that he had refused to give him the *subaye* greeting. Jalasi informed both headmen that they were to be independent of each other. Malilo

[1] *Kwakulipatika*—lit. one who had made himself a slave.

[2] *Kulikwezya*—reflexive causative of the verb *kukwela*, to climb, i.e. to cause oneself to climb or to exalt one's status.

2: Mitchell E-5 (1946-1949) 1956 FT7 Yao FT7

was to report strangers coming into his village area independently of Kalonga. Nowadays, there is much tension between the two headmen and they summon each other to court on the slightest pretext. The peace is kept only by order of Jalasi. On the whole, however, it is Kalonga who has the higher status and superior prestige.

Unfortunately I have no figures to show how large a village becomes before its headman applies for Government recognition. The average number of tax-payers under village headmen who have just been granted 'books' might have provided this information, but I was unable to collect it. Formerly, they could become Administrative headmen only if they had more than 20 tax-payers under them. Nowadays, however, owing to differential fertility and the reduction in size of villages because of internal dissension, many of the Administrative villages (22 per cent) are smaller than the 20 tax-payer limit. They, however, retain their 'books'. I know that often within the Administrative villages of important headmen or chiefs, there are contained some minor villages bigger than some Administrative villages which are farther away. For example, in Chiwalo's own Administrative village, I know that the villages of Selemani, Ali Kasoka and Ntapasia are larger than many Administrative villages. It is not only the size of the village which allows a headman to apply for a 'book'. It is his relative status in the community. Men of higher rank than Selemani, Ali Kasoka and Ntapasia could probably approach Chiwalo and ask him for a 'book'. But these three are Newcomers. Selemani was a refugee from the Portuguese wars and went to live in Mlumbe area in Zomba district. He came to Chiwalo's area in about 1930. Ali Kasoka moved in about 1940. Ntapasia came about 1921. But they dare not approach Chiwalo himself to ask for a 'book'. Here Chiwalo's rôle of chief is compounded with his rôle of Administrative village headman so that they would be asking Chiwalo voluntarily to reduce the size of his Administrative village. It is only when their villages become conspicuously large that headmen may begin to force the chief's hand. They have always one sanction they can bring to bear on the chief—they can threaten to move out of his area into another chiefdom. The chief may not retain any of his subjects by force. If they express a wish to live in another chiefdom he cannot stop them. On the other hand, useful as this weapon

2: Mitchell E-5 (1946-1949) 1956 FT7 Yao FT7

622 is when it is used by an Administrative village headman, as I
554 shall illustrate later, it will not serve a minor village headman
643 much to move out of one chiefdom to another if his object is to become recognized as an Administrative village headman. If he goes to another chiefdom he is automatically regarded as one of the most junior of the headmen. If he goes to another chiefdom as an Administrative village headman already, he takes with him his 'book' and to some extent the rank associated with it.

162 The size of Administrative villages as measured by the number
621 of tax-payers in them is about equal in all three categories
622 of village headmen. Table X sets out the distribution. The

TABLE X

DISTRIBUTION BY SIZE OF VILLAGES UNDER ABORIGINAL, INVADER AND NEWCOMER ADMINISTRATIVE HEADMEN

Tax-payers	Totals			Total	Percentages			Total
	Aborigines*	Invaders	Newcomers†		Aborigines	Invaders	Newcomers	
0–19	6	29	56	91	30·0	21·3	22·0	22·2
20–39	7	49	85	141	35·0	36·0	33·5	34·4
40–59	2	25	57	84	10·0	18·4	22·4	20·5
60–79	3	16	29	48	15·0	11·8	11·4	11·7
80–99	1	1	13	15	5·0	0·7	5·1	3·7
100–119	1	6	4	11	5·0	4·4	1·6	2·7
120–139	—	4	4	8	—	2·9	1·6	2·0
140–159	—	1	1	2	—	0·7	0·4	0·5
160–179	—	1	1	2	—	0·7	0·4	0·5
180–199	—	1	1	2	—	0·7	0·4	0·5
200–249	—	3	—	3	—	2·2	—	0·7
250–300	—	—	3	3	—	—	1·2	0·7
Totals .	20	136	254	410‡	100·0	99·8	100·0	100·1
Mean .	39·0	48·3	45·1	45·9				
S.E. .	8·7	4·2	2·8	2·2				

* Excludes one village whose size was unknown.
† Excludes 3 villages whose sizes were unknown.
‡ The total excludes an additional 10 villages for which full details were not recorded.

Administrative villages of the Aborigines, mostly Nyanja, appear to be rather smaller than those of the Invaders and Newcomers.

2: Mitchell E-5 (1946-1949) 1956 FT7 Yao FT7

There were only 20 villages in that sample and the difference may not be significant though the distribution is skewed to the smaller villages. The mean number of tax-payers under Invader village headmen was slightly larger than that under Newcomers, but the difference was not significant.[1] Among the Invaders are included the chiefs and *ndunas* who usually have villages of over 100 tax-payers. Smaller villages are less likely to break away from chiefs and *ndunas* than they are from Newcomers and less important men.

Village headmen may exploit their connections with the chief in their competition with their fellows for Government recognition. In Tables XI to XIV inclusive, I have used the material I collected in Mposa, Chamba, Chikweo and Ngokwe areas only, because I know that my survey did not include many headmen in Kawinga and Liwonde areas. The total in these tables includes both Administrative and non-Administrative village headmen. From Table XI it is clear that there is a

TABLE XI

PROPORTION OF ADMINISTRATIVE VILLAGE HEADMEN AMONG ALL VILLAGE HEADMEN OF THE THREE CATEGORIES IN CHIKWEO, NGOKWE, CHAMBA AND MPOSA AREAS

Type of Headman	Aborigines	Invaders	Newcomers	Total
Administrative . . .	12	61	77	150
Non-Administrative .	1	37	111	149
Total	13	98	188	299
% Admin. Headmen.	92·3	62·2	41·0	50·2

$n = 2$; $\chi^2 = 21{\cdot}34$; $p = 0{\cdot}00002$.

significantly greater proportion of headmen of Invader descent than headmen of Newcomer descent who are recognized as Administrative headmen.[2] The percentage of Aborigines who are Administrative headmen is highest of all but it is based on such a small number that not much value can be placed on it.

[1] Diff. of means = 3·4; S.E. of diff. = 4·5; C.R. = 0·76; $p = 0{\cdot}4472$.
[2] Diff. of per cent = 21·2; S.E. of diff. = 6·07; C.R. = 3·49; $p = 0{\cdot}00048$.

2: Mitchell E-5 (1946-1949) 1956 FT7 Yao FT7

TABLE XII

162 621 622

PROPORTION OF ADMINISTRATIVE VILLAGE HEADMEN AMONG ALL VILLAGE HEADMEN WHO ARE RELATED AND NOT RELATED TO THE CHIEF IN CHIKWIO, NGOKWE, CHAMBA AND MPOSA AREAS

Type of Headman	Relatives		Non-Relatives	Total
	Direct	Clan		
Administrative . . .	38	36	76	150
Non-Administrative .	16	24	109	149
Total	54	60	185	299
% Admin. Headmen.	70·4	60·0	41·1	50·2

$n = 2$; $\chi^2 = 17{\cdot}23$; $p = 0{\cdot}00018$.

Table XII shows that among the chief's direct relatives (i.e. those who can trace some direct link, matrilineally, patrilaterally or affinally to the chief) there are more Administrative headmen than among the relatives who are related only through clan links. Further, it shows that there are more Administrative headmen among the chief's relatives as a whole than among those headmen who are not related to him at all.

It seems probable also that village headmen have used their link to the chiefs through religion to prosecute their claims to rank. From Table XIII we see that there are more Moslem

TABLE XIII

PROPORTION OF ADMINISTRATIVE HEADMEN AMONG ALL VILLAGE HEADMEN OF THE SAME RELIGION AS, OR DIFFERENT RELIGION FROM, THAT OF THE CHIEF (ISLAM) IN CHIKWIO, NGOKWE, CHAMBA AND MPOSA AREAS

Type of Headman	Moslem	Christian	Pagan	Total
Administrative . . .	113	27	9	149
Non-Administrative .	93	31	21	145
Total	206	58	30	294*
% Admin. Headmen.	54·9	46·6	30·0	50·2

$n = 2$; $\chi^2 = 6{\cdot}97$; $p = 0{\cdot}03078$.

* Excludes 5 village headmen whose religion I did not record.

2: Mitchell E-5 (1946-1949) 1956 FT7 Yao FT7

Administrative headmen than either Christian or Pagan. The chiefs, of course, are all Moslem. 162

Lastly, the same trend is seen among those headmen who are of the same tribe as the chief, against those who are of other tribes (Table XIV). Here, however, the difference is so small 621 622

TABLE XIV

PROPORTION OF ADMINISTRATIVE HEADMEN AMONG ALL VILLAGE HEADMEN OF THE SAME TRIBE AS, OR DIFFERENT TRIBES FROM, THE CHIEF IN CHIKWHO, NGOKWE, CHAMBA AND MPOSA ARRAS

Type of Headman	Same Tribe	Different Tribe	Total
Administrative	85	65	150
Non-Administrative	76	73	149
Total	161	138	299
% Administrative Headmen .	52·8	47·1	50·2

$n = 1$; $\chi^2 = 0{\cdot}95$; $p = 0{\cdot}3422$.

that it may easily have arisen by chance. These factors, however, do not operate independently. There are more co-tribesmen, co-religionists and relatives of the chief among the Invaders than among the other categories. In other words, the factors are all intercorrelated and it is possible to consider any particular factor as the independent variable. From the point of view of the people themselves, to be an Invader is to have one of the best claims on the chief to become an Administrative headman.

THE SIGNIFICANCE OF THE SCARLET HEADBAND

Government recognition therefore provides the means whereby headmen are ranked in two major categories. But Administrative village headmen themselves are ranked by a number of prestige-indicating characteristics. The most important of these are the right to wear a plain scarlet headband and the right to hold boys' and girls' initiation ceremonies. 622 554 292

Of these two additional marks of rank the more important is the right to wear the scarlet headband. This headband is wrapped round the head, turban fashion. Most village headmen wear a headband of some sort, either of white or coloured cloth,

2: Mitchell E-5 (1946-1949) 1956 FT7 Yao FT7

622
554
292

while most commoners do not. In Kawinga-Liwonde area, village headmen of high rank are entitled to wear a plain scarlet headband (*mlangali*). One informant suggested to me that the plain scarlet stands for blood, i.e. it indicates one of the most important elements in rank to-day—warrior ancestry. I do not know that this opinion is well supported. Among the 424 village headmen I enquired about, 24 or 5·7 per cent were entitled to this mark of honour. Of these, three were Aboriginal Nyanja headmen, 17 were Invaders, and only four were Newcomers. Of the four Newcomers, one had the right to hold it before he had come to the area from Portuguese East Africa and that was before the White conquest; one living in Chamba's area had brought it from Liwonde's area where he had been given the right to wear it; and the other two were in Chikweo's area and were given the right by the present Chikweo. The three Aborigines who wear the scarlet headbands are Kuzumbu in Kawinga's area, and Mbeta and Mbande in Mpona's area. All three are settled around the shores of Lake Shirwa and they are said to have been the original Nyanja chiefs in this area when the Yao invaded. These chiefs also have boys' and girls' initiation rights. The rank they held in their own tribal communities is recognized by the Yao, who in any case ascribe superior status to the first-comers into an area. With the Nyanja chiefs the position became ambiguous. They had superior rank in that they were in occupation of the land before the Yao moved in. At the same time when they subjugated themselves to the Yao they accepted servility. Nowadays, the Nyanja are well integrated into the political life of the area and carry on their existence along the lake shores, still going to their traditional chief for the settlement of most of the cases not involving heavy compensation.

All Invader chieftains have scarlet headbands. Some of their direct relatives such as Seora, their clan relatives such as Nsanama and Mapundu, or their patrilateral relatives such as Cibwana Liwonde, the son of the first Liwonde, also have them. After these the next important group who are entitled to wear them are the *ndunas*. Examples are Kangomba, Masinde and Cindamba in Kawinga's area and Makaca in Ngokwe area. The *ndunas* are village headmen, usually unrelated to the chief, but who have been long associated with him, and who are his

2: Mitchell E-5 (1946-1949) 1956 FT7 Yao FT7

councillors. Long ago they held a most important position within the chiefdom. They were the loyal headmen and intimates of the chief, who could therefore be entrusted with the government of outer areas. They were posted to various parts of the chiefdom; kept the chief advised of war and attacks; maintained the peace among the village headmen in their areas; and collected the ivory to which the chief was entitled and sent it to him. Nowadays, the *ndunas* find themselves in competition with other officials who have arisen from the White Administrative system. The chief also finds advisers and councillors in his court clerks and his court sergeants, but the *ndunas* still have much prestige and advise and assist the chief in his administration of the area. Earlier, I mentioned that a senior headman was allowed to have a mat to himself, and only his own friends and people of his rank could occupy it with him. The only people in the chiefdom who could share the chief's mat, were the *ndunas*, and they called him *angange* (my friend). Because the *ndunas* were not related to the chief they were in the peculiar position of being able to settle quarrels between the chief and his family: they were the arbitrators in arguments between the chief and his 'younger brothers' (junior male matrilineal relatives), or the chief and his wives. By Yao custom, rank is inherited by a village headman's successor, so that the relationship between the chief and his *ndunas* is perpetuated through successive incumbents. In Kawinga's area, for example, the *ndunas* to-day have the same name and the same relationship and relative position with regard to the chief as the *ndunas* who invaded the country nearly 100 years ago. This traditional ranking of village headmen emerges as soon as the Government alters its policy. Recently, when the idea of group headmen was reintroduced, the chief nominated the *ndunas* to become group headmen—a position not unlike that they held before the White conquest.

There is considerable difference between the size of Administrative villages under those headmen who have the right to wear the scarlet headband and those who have not. Table XV shows this clearly. The mean number of tax-payers under the former headmen is 80, while under the latter it is only 38. Among the village headmen with the right to wear the scarlet headband 62·5 per cent had villages of more than 60 tax-payers, while among other headmen only 25·0 per cent of the villages were in

2: Mitchell E-5 (1946-1949) 1956 FT7 Yao FT7

TABLE XV

SIZE OF ADMINISTRATIVE VILLAGES UNDER HEADMEN WITH SCARLET HEADBANDS AND THOSE WITHOUT

622
554
282

No. of Tax-payers	Without Scarlet Headband	With Scarlet Headband	Total	% Headmen with S.H.
Under 40	225	7	232	3·0
40–79	125	7	132	5·3
80–119	23	3	26	11·5
120–139	6	2	8	25·0
140 and over . . .	7	5	12	41·7
Total	386	24	410*	5·9

Combining villages of more than 80 tax-payers.

$n = 2$; $\chi^2 = 24{\cdot}56$; $p < 0{\cdot}0001$.

* Excludes 4 villages in which the numbers of tax-payers were unknown.

this category.[1] The village headmen who are entitled to wear the scarlet headband are mainly Invaders and people of high rank. Their villages are large because of their rank as well as vice versa.

I have never heard of a village headman's wearing a scarlet headband without the chief's permission, and I am not sure what sanctions the chief would apply to prevent it. I have heard men say that village headmen who are not entitled to wear it do so if they live far away, but take it off when they come near the chief's court. However, this was only in casual conversation and I did not have an opportunity to check it. From the point of view of the people the right is so bound up with traditional status that it is almost inconceivable that the custom should be flouted. As we have seen, among the Newcomers only two have been given the right within the last 30 years.

Yet the significance of the scarlet headband differs considerably from area to area. In Malemia and in Jalasi areas the custom seems either to have fallen away or never to have existed. In Jalasi area Islam may have some effect. In Malemia area the majority are Christians and most headmen have taken to

[1] Diff. of per cent = 37·3; S.E. of diff. = 9·77; C.R. = 3·83; $p = 0{\cdot}0001$.

2: Mitchell E-5 (1946-1949) 1956 FT7 Yao FT7

European-type clothing. In Nyambi area, abutting on Kawinga-Liwonde area in the north, there are 12 Administrative village headmen out of 57 who are entitled to the scarlet headband (21 per cent). For the Kawinga-Liwonde area the percentage is 5·7. An informant explained why a large proportion of headmen in Nyambi area had the right to wear the headband: 'The old Nyambis and the present one do not care. If a man has many huts, and if he says that his uncle had a scarlet headband, then he is given one too.' Even within the Kawinga-Liwonde area there is some variation in the number of headmen who are entitled to the scarlet headband. The following table sets this out.

Chiefdom	Total Admin. Headmen	% Scarlet Headbands
Kawinga	160	3·7
Liwonde	104	4·8
Mposa	30	10·0
Chikweo	48	8·4
Ngokwe	21	14·2
Chambu	61	4·9

Mposa area near Lake Chirwa shows such a high proportion because of the Nyanja ex-chiefs who are entitled to the scarlet headband. Chikweo and Ngokwe on the other hand are the Mpotola chiefs and seem to have taken the same attitude as Nyambi and his predecessors. In contrast to the statement about Nyambi, one Administrative headman in Mposa's area said: 'The chief's scarlet band is good enough for us all. If each had one it would be too gaudy!'

The Struggle for Initiation Rights

Village headmen are generally outside competition for the right to wear the scarlet headband. These rights have been established largely by ancient custom and are almost confined to the invaders or to those who have had them before they came into the area. The competition for initiation rights, however, goes on steadily. H. L. Duff had noticed this as early as 1906.[1] Newcomers may approach the chief and agitate for the rights,

[1] See p. 81.

2: Mitchell E-5 (1946-1949) 1956 FT7 Yao FT7

622 554 881 pressing their claims on many grounds. They may stress that they have a large village under them and that they have many children to initiate, and argue that their villages are far away from the nearest headman who has these rights. Or they may use their rank and connection with the chief. If all else fails they may threaten to move to another chiefdom. Punyu threatened to do this.

622 554 881 578 In 1947, Punyu, an Administrative village headman in Chiwalo area, had 43 tax-payers under him and thought that he should have initiation rights. He had come to Chiwalo's in 1933 after the village had split in Chikowi's area near Zomba. He had relatives in Kapaloma's village in Chiwalo's area. He argued with Chiwalo that his uncle had had initiation rights. Chiwalo on the other hand, argued that Punyu village was so close to his own—a matter of under a mile—that he could not consider it. This argument went on for some months. Eventually Punyu told the chief that he was going to leave his area. Chiwalo then recanted to some extent and offered Punyu the permission to use the *ciputu* basket, that is, the right to conduct girls' initiation ceremonies. Punyu, after consulting his sister, took this and was satisfied.

But the chief is not always cowed by the threat to leave his area. He is sometimes able to draw on his official position to control his headmen. The argument between Makata and Ntimbuka illustrates this very well.

Makata was an Administrative headman of some standing in Chiwalo's area. He had been one of the invading headmen and was entitled to wear the scarlet headband. In 1947, he had 101 tax-payers under him and had been given the right to hold boys' and girls' initiation ceremonies at least 30 years ago. Ntimbuka on the other hand was a comparative newcomer. He came from Kawinga's area in about 1930. He is of Nyanja stock but has adopted the Yao language and customs. His village in 1947 had 23 tax-payers and was about 300 yards from Makata's. Early in 1947, Ntimbuka started quarrelling with Makata about the right to boys' initiation ceremonies. He felt that he ought to have rights as well as Makata. Eventually he told Makata that he would refuse to take the boys to his initiation ceremonies. Seething with discontent Ntimbuka went to complain about Makata to Chiwalo, and told him that he had had an argument with Makata and that he was going to leave the area because of it. Chiwalo called Makata and asked him what the trouble was. Makata told Chiwalo that Ntimbuka was jealous of the basket. Chiwalo

2: Mitchell E-5 (1946-1949) 1956 FT7 Yao FT7

then told Ntimbuka that he could not give a sacrifice basket to him because his village was so close to Makata's. Ntimbuka was not satisfied with this and continued agitating. Chiwalo, at last exasperated, threatened Ntimbuka that if he had any more trouble he would send him to Kawinga to be dealt with. Kawinga of course is the Native Authority in the area and holds the power of arresting headmen under Section 12 of the Ordinance. Ntimbuka was duly cowed by this threat and meekly agreed to send his boys to Makata's initiation ceremonies.

Chiwalo had to support Makata against Ntimbuka. Makata was a powerful headman: he had rank from his descent and a large village under him. Ntimbuka was a Newcomer and he had only a fifth of the followers that Makata had. If it meant losing followers it was better to lose the smaller village. As it was Chiwalo could use the power of the White Administration to keep Ntimbuka within his area and yet keep him subservient.

A Newcomer is unlikely to be given both boys' and girls' initiation rights. He is more likely to be able to get only one of the rights. Table XVI sets out the number of headmen in

TABLE XVI

NUMBERS OF HEADMEN HOLDING BOYS' AND GIRLS' INITIATION RIGHTS AMONG ABORIGINAL, INVADER AND NEWCOMER HEADMEN

Type of Initiation Right	Aborigines	Invaders	Newcomers	Total
Both boys' and girls' init. rights . . .	—	17	14	31
Boys' init. rights only .	1	6	10	17
Girls' init. rights only .	1	12	31	44
No init. rights . . .	16	84	198	298
Total	18	119	253	390*
% Init. holders . .	11·5	29·4	21·7	24·5

Combining Aboriginal and Invader totals.

$n = 3$; $\chi^2 = 6{\cdot}48$; $p = 0{\cdot}09254$.

* Total excludes the 24 headmen who have the right to wear the scarlet headband.

each category who hold initiation ceremonies. While more Invaders have the right to both ceremonies the proportion holding

2: Mitchell E-5 (1946-1949) 1956 FT7 Yao FT7

622
554
881

only one is roughly the same.[1] A Newcomer may approach the chief and ask for initiation rights in certain circumstances only. In general, these are that his village is a very large one, that he had the rights in the area from which he has just come, and/or that he is living in so isolated a part that it would be a hardship for his children to go to the nearest other headman who holds the rights; but he may press his claim if he is related to the chief and can approach him as a kinsman.

There is little doubt that the rights are closely associated with the size of the villages:

TABLE XVIIa

INITIATION RIGHTS AMONG INVADER AND NEWCOMER HEADMEN WHO HAVE VILLAGES WITH MORE AND LESS THAN 60 TAX-PAYERS

(The figures in brackets are percentages)

Type of Init. Right	Over 60		Under 60		Total
	Invader	New-comer	Invader	New-comer	
Both init. rights . .	10 (32·3)	9 (29·0)	7 (22·6)	5 (16·1)	31 (100·0)
Boys' init. rights only .	2 (12·4)	5 (31·3)	4 (25·0)	5 (31·3)	16 (100·0)
Girls' init. rights only .	2 (4·8)	13 (31·0)	10 (23·8)	17 (40·4)	42 (100·0)*
No init. rights	9 (23·2)	26 (9·3)	75 (26·8)	170 (60·7)	280 (100·0)†
Total . .	23 (6·2)	53 (14·4)	96 (26·0)	197 (53·4)	369 (100·0)

$n = 3$ ‡; $\chi^2 = 53·49$; $p < 0·0001$.

* Excludes 1 village whose size was unknown.
† Excludes 2 villages whose sizes were unknown.
‡ Combining Invader and Newcomer groups.

[1] Invaders with both initiation rights (17 of 119) = 14·3 per cent; Newcomers with both initiation rights (14 of 253) = 5·5 per cent; Diff. of per cent = 8·8; S.E. of diff. = 3·07; C.R. = 2·85; $p = 0·0044$.

Invaders with rights to only one of the initiations (18 of 119) = 15·1 per cent; Newcomers with rights to only one of the initiations (41 of 253) = 16·2 per cent.

2: Mitchell E-5 (1946-1949) 1956 FT7 Yao FT7

TABLE XVIIb

INITIATION RIGHTS AMONG INVADER AND NEWCOMER HEADMEN WHO HAVE VILLAGES WITH MORE AND LESS THAN 60 TAX-PAYERS

(Arranged to hold the influence of village size fixed)

Type of Headman	Over 60		Under 60		Total
	Init.	No Init.	Init.	No Init.	
Invaders . .	14 (11·8)	9 (7·6)	21 (17·6)	75 (63·0)	119 (100·0)
Newcomers .	27 (10·8)	26 (10·4)	27 (10·8)	170 (68·0)	250 (100·0)
Total . .	41 (11·1)	35 (9·5)	48 (13·0)	245 (66·4)	369 (100·0)

$n = 3$; $\chi^2 = 3{\cdot}96$; $p = 0{\cdot}26667$.

Among all headmen (Table XVIIa):

19 of 31 headmen who hold both initiation rights have villages with more than 60 tax-payers . . . . . — 61·3%
7 of 16 headmen who hold only the boys' initiation rights have villages with more than 60 tax-payers . . . . . — 43·7%
15 of 42 headmen who hold only the girls' initiation rights have villages of more than 60 tax-payers . . . . . — 35·7%
35 of 280 headmen who hold no initiation rights have villages with more than 60 tax-payers . . . . . — 12·5%

When the influence of village-size is held constant the advantages of Invaders over Newcomers in the competition for initiation rights is discernible, but the differences are so small that they are of doubtful significance (Table XVIIb).

14 of 23 Invader headmen with villages over 60 tax-payers have initiation rights . . . . . — 60·9%
27 of 53 non-Invader headmen with villages over 60 tax-payers have initiation rights . . . . . — 50·9%
21 of 96 Invader headmen with villages less than 60 tax-payers have initiation rights . . . . . — 21·9%
27 of 197 non-Invader headmen with villages less than 60 tax-payers have initiation rights . . . . . — 13·7%

As we may anticipate, relationship with the chief is an important factor in the competition for initiation rights. Among the chief's direct and clan relatives for example, 36·4 per cent (51 of 140) hold initiation rights, but only 16·8 per cent (39 of

2: Mitchell E-5 (1946-1949) 1956 FT7 Yao FT7

622
643
554
881

TABLE XVIII

INITIATION RIGHTS AMONGST INVADER AND NEWCOMER HEADMEN WHO ARE RELATED AND UNRELATED TO THE CHIEF

Type of Initiation Holder	Invader				Newcomer				Total
	D	C	N	T	D	C	N	T	
Both init. rights .	5	8	4	17	2	3	9	14	31
Boys' init. rights only	2	2	2	6	1	1	8	10	16
Girls' init. rights only	5	5	2	12	5	12	14	31	43
No init. rights . .	26	25	33	84	13	25	160	198	282
Total	38	40	41	119	21	41	191	253	372
% Init. holders .	31·6	40·0	24·2	29·4	38·1	39·0	19·4	21·7	24·2

D = Direct relatives; C = Clan relatives; N = Non-relatives; T = Sub-totals.

Combining Invader and Newcomer totals.

$n = 6$; $\chi^2 = 22{\cdot}24$; $p = 0{\cdot}00112$.

232) of his non-relatives hold them [1] (Table XVIII). There is a slightly greater proportion of the clan relatives holding initiation rights than direct kinsmen, but the difference is insignificant.[2] Slightly more of the chief's relatives among the Newcomers hold initiation rights than those among the Invaders,[3] but once again the difference is so small that it might easily have arisen by chance. A much greater proportion of Invaders is related to the chief than of Newcomers,[4] so that among the Invaders the relative advantage of their kinship with the chief, as against the unrelated, is somewhat reduced. There are very many Invaders who can claim kinship with the chief in their struggle for initiation rights. Among the Newcomers, conversely, because there

[1] Diff. of per cent = 19·6; S.E. of diff. = 4·58; C.R. = 4·28; $p = 0{\cdot}00002$.

[2] Direct relatives (20 of 59) = 33·9 per cent; Clan relatives (31 of 81) = 38·2 per cent; Diff. of per cent = 4·3; S.E. of diff. = 8·2; C.R. = 0·52; $p = 0{\cdot}6030$.

[3] Newcomers (24 of 62) = 38·7 per cent; Invaders (27 of 78) = 34·6 per cent; Diff. of per cent = 4·1; S.E. of diff. = 8·2; C.R. = 0·5; $p = 0{\cdot}6170$.

[4] Excluding those entitled to wear the scarlet headband. Invaders (78 of 119) = 65·6 per cent; Newcomers (62 of 253) = 24·5 per cent.

2: Mitchell E-5 (1946-1949) 1956 FT7 Yao FT7

622
643
554
881

are so few of the chief's kinsmen among them, to be related to the chief is a distinct advantage in this struggle.

I recorded the origin of the initiation rights of only 38 of the 55 Newcomer headmen who hold these, excluding those who also have the right to wear the scarlet headband. Table XIX sets out these data. We cannot put too much reliance on these

TABLE XIX

THE ORIGIN OF INITIATION RIGHTS OF SOME NEWCOMER HEADMEN

Type of Initiation Right	Given by Chief of present residential chieftaincy	Brought from elsewhere	Total	% Brought in
Both init. rights . .	8	5	13	38
Boys' init. rights only .	9	0	9	0
Girls' init. rights only .	15	1	16	6
Total	32	6	38	16

figures because they cover only about three-quarters of the village headmen in this category, and these, moreover, were not randomly selected. As they stand, the figures support my earlier conclusion that Newcomers are more likely to obtain rights for only one initiation ceremony, than for both together. While 38·5 per cent (5 of 13) of the village headmen who hold both initiation ceremonies had brought in their rights with them from outside, only 4·0 per cent (1 of 25) of those who hold only one of the rights had done so.[1] An analysis of the periods when headmen were given their rights reveals consistent results.

From Table XX we see that:

Of 11 Invaders who hold rights to both initiation ceremonies, recent chiefs granted 3 . . . . . = 27·3%
Of 8 Newcomers who hold rights to both initiation ceremonies, recent chiefs granted 2 . . . . . = 25·0%
Of 12 Invaders who hold rights to only one of the initiation ceremonies, recent chiefs granted 3 . . . . . = 25·0%
Of 24 Newcomers who hold rights to only one of the initiation ceremonies, recent chiefs granted 14 . . . . . = 58·3%

[1] Diff. of per cent = 34·5; S.E. of diff. = 12·47; C.R. = 2·77; p = 0·0056.

2: Mitchell E-5 (1946-1949) 1956 FT7 Yao FT7

TABLE XX

WHEN INITIATION RIGHTS WERE GRANTED TO NEWCOMERS AND INVADERS

622
643
554
881

Type of Initiation Right	By early Chiefs		By recent Chiefs*		Total
	Invaders	Newcomers	Invaders	Newcomers	
Both init. . .	8	6	3	2	19
One init. only .	9	10	3	14	36
Total . . .	17	16	6	16	55

* This is obviously a crude classification. I have taken roughly 35 years as the dividing line. As the early chiefs I have classified all the Kawingas before and including Kawinga V who died in 1913; all the Liwondes before and including Liwonde III who died in 1921; all the Ngokwes before and including Ngokwe IV who died in 1905; all the Mposas before and including Mposa II who died in 1913; and all the Chikweos before and including Chikweo II who died in 1914.

In other words, recent chiefs have been granting single initiation rights to Invaders in the same proportion as they have been granting both rights, but they have been granting Newcomer headmen the right to hold only one ceremony more often than the right to hold both. Of the six sets of rights to initiation ceremonies granted by recent chiefs to Invader headmen, three were rights to hold only one ceremony, while 14 of the 16 initiation rights granted to Newcomer headmen were for one ceremony only.[1]

622
554
881
795
619

Headmen do not make use of their bonds of common religion or tribe with the chief in their competition for initiation rights. Table XXI sets out the numbers of headmen of different religion. There is a substantially smaller proportion of Pagan headmen (9·7 per cent) holding initiation ceremonies than either Christians (25·5 per cent) or Moslems (24·4 per cent).[2] Most Pagans, however, are also Newcomers so that this difference is actually a reflex of the generally lower rank of Newcomers. Table XXII sets out the number of headmen of the chief's tribe and of other

[1] i.e. 50·0 per cent against 87·5 per cent; diff. of per cent = 37·5; S.E. of diff. = 20·08; C.R. = 1·87; p = 0·0614.

[2] Pagans = 9·7 per cent; Others 24·6 per cent; diff of per cent = 14·9; S.E. of diff. = 7·94; C.R. = 1·88; p = 0·0603.

2: Mitchell E-5 (1946-1949) 1956 FT7 Yao FT7

622
554
881
795
619

TABLE XXI

THE DISTRIBUTION OF INITIATION RIGHTS AMONG HEADMEN OF DIFFERENT RELIGIONS

Type of Initiation Holder	Moslem	Christian	Pagan	Total
Both init. rights . .	25	4	1	30*
Boys' init. rights only .	12	4	—	16
Girls' init. rights only .	31	6	2	39†
No init. rights . . .	211	41	28	280‡
Total	279	55	31	365

$n = 6$; $\chi^2 = 5{\cdot}05$; $p = 0{\cdot}53778$.

* Excludes 1 headman whose religion was unrecorded.
† Excludes 4 headmen whose religion was unrecorded.
‡ Excludes 2 headmen whose religion was unrecorded.

TABLE XXII

THE DISTRIBUTION OF INITIATION RIGHTS AMONG HEADMEN OF THE SAME AND DIFFERENT TRIBE AS THE CHIEF

Type of Initiation Holder	Same Tribe	Different Tribe	Total
Both init. holders	20	11	31
Boys' init. holders only . . .	7	9	16
Girls' init. holders only . . .	23	20	43
No init. rights	156	126	282
Total	206	166	372
% Init. holders	24·3	24·1	24·2

$n = 3$; $\chi^2 = 2{\cdot}17$; $p = 0{\cdot}54167$.

tribes who hold initiation rights. Once again the proportion of headmen of the same tribe as the chief who hold initiation rights is the same as that of headmen of different tribes from the chief. We may say, therefore, that membership of tribe is not an operative factor in the granting of initiation rights.[1]

[1] The factors contributing to the granting of initiation rights are obviously all intercorrelated.

2: Mitchell E-5 (1946-1949) 1956 FT7 Yao FT7

622 554 881 292 The right to hold initiation ceremonies may be held concurrently with the right to wear a scarlet headband. For purposes of analysis thus far, I have treated the holding of initiation ceremonies separately. By common consensus, the wearing of this headband is an indicator of much greater rank than the holding of initiation ceremonies. The highest ranking headmen, like the chiefs, usually have the right to wear the scarlet headband together with the rights to both initiation ceremonies. In order to show how rank varies among the main categories of village headmen I have devised a numerical

TABLE XXIII

MARKS OF RANK AMONG ADMINISTRATIVE VILLAGE HEADMEN

Type of Headman	With Headband				Without Headband				Total
	Both	Boys only	Girls only	No rights	Both	Boys only	Girls only	No rights	
Aborigines:									
Direct rel.	—	—	—	—	—	—	—	2	2
Clan rel.	1	—	—	—	—	—	—	1	2
No rel. .	2	—	—	—	—	1	1	13	17
Total .	3	—	—	—	—	1	1	16	21
Invaders:									
Direct rel.	8	1	—	—	5	2	5	26	47
Clan rel.	4	—	—	—	8	2	5	25	44
No rel. .	3	—	—	1	4	2	2	33	45
Total .	15	1	—	1	17	6	12	84	136
Newcomers:									
Direct rel.	—	—	—	—	2	1	5	13	21
Clan rel.	—	1	1	—	3	1	12	25	43
No rel. .	1	—	—	1	9	8	14	160	193
Total .	1	1	1	1	14	10	31	198	257
Grand total	19	2	1	2	31	17	44	298	414

2: Mitchell E-5 (1946-1949) 1956 FT7 Yao FT7

system of ranking. I have assumed that the rarer the mark of rank the higher the rank it indicates. Table XXIII sets out the incidence of marks of rank among the 414 Administrative village headmen for whom I have recorded the data. In all, there were 24 headmen with scarlet headbands, 69 with boys' initiation ceremonies and 95 with girls' initiation ceremonies. I have given the holding of a scarlet headband the value of the reciprocal of the proportion of village headmen who hold that right, i.e. $414/24 = 17{\cdot}3$.

622
554
881
292

The value of holding a boys' initiation ceremony by the same procedure is: $414/69 = 6{\cdot}0$.

The value of holding a girls' initiation ceremony is: $414/95 = 4{\cdot}4$.

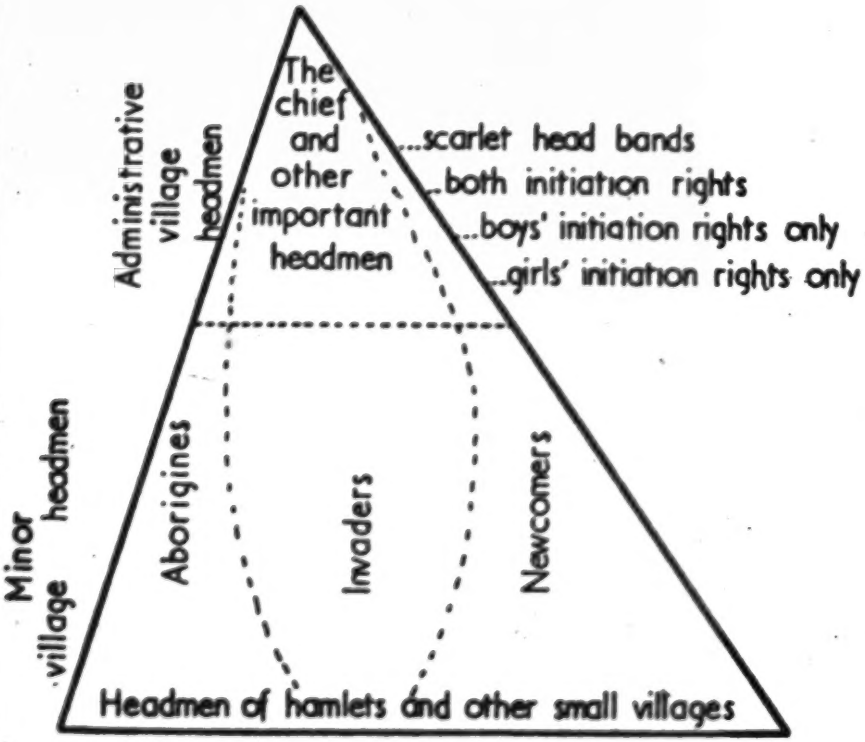

DIAGRAM 2. PARADIGM OF THE POLITICAL STRUCTURE.

2: Mitchell E-5 (1946-1949) 1956 FT7 Yao FT7

622 554 881 292 The value of holding the various combinations of rights then are these:

Scarlet headband and both initiation ceremonies	= 27·7
Scarlet headband and boys' initiation ceremony	= 23·3
Scarlet headband and girls' initiation ceremony	= 21·7
Scarlet headband alone	= 17·3
Both initiation ceremonies	= 10·4
Boys' initiation ceremony only	= 6·0
Girls' initiation ceremony only	= 4·4

We may now score the rank of headmen within any particular category by estimating the percentage score from a possible. For example, the score of the rank among Aboriginal headmen would be:

3 × 27·7 = 83·1
1 × 6·0 = 6·0
1 × 4·4 = 4·4
93·5 (expressed as a percentage of 21 × 27·7 = 16·1)

622 554 Using this method I have set out in Table XXIV the rank scores for headmen in the categories in Table XXIII. Table XXIV shows that on the whole ranking among the Invader

TABLE XXIV

RANK SCORES FOR ADMINISTRATIVE VILLAGE HEADMEN OF DIFFERENT CATEGORIES

Aborigines:		
Chief's direct relatives	0	
Chief's clan relatives	50·0	
Chief's non-relatives	14·0	
All Aborigines		16·1
Invaders:		
Chief's direct relatives	25·4	
Chief's clan relatives	18·7	
Chief's non-relatives	13·1	
All Invader headmen		19·2
Newcomers:		
Chief's direct relatives	8·4	
Chief's clan relatives	11·3	
Chief's non-relatives	4·6	
All Newcomer headmen		6·1
All chief's direct relatives		19·6
All chief's clan relatives		13·8
All chief's non-relatives		6·8

2: Mitchell E-5 (1946-1949) 1956 FT7 Yao FT7

headmen is higher than among the Aborigines or the Newcomers. It also shows quite clearly that the chief's direct relatives hold more of the privileges associated with rank than his clan relatives do, and they in turn hold more than his non-relatives. 622 554

The Political Process as a Struggle of Headmen Against the Chief

Modern chiefdoms appear to be organized on essentially the same principles as those described by Duff MacDonald. A chiefdom is headed by a chief and under him his subjects are organized in villages. Each village is represented by a headman, who stands in a relationship to the chief and to other village headmen, according to the prestige of the group he represents. This prestige is determined partly by his historical association with the chief in his past military exploits, partly by the size of his village, and partly by the prestige he has had in other areas. These elements were significant in Yao polity before the advent of the Whites, as we have seen from Duff MacDonald's description. Village headmen then were continually involved in a struggle for power among themselves and against the chief.[1] The struggle for power among village headmen continues to-day though in a changed context. Military power is no longer the object of the competition between them: the struggle for followers has become transmuted into a struggle for tax-payers. In harmony with the new political and economic situation a successful headman is not rewarded by military superiority, but by Government recognition and an official emolument. 643 622 554 178

At the same time, the chief whose power in the pre-White days resided in his armed forces, nowadays draws on the power of the White Administration to exercise his authority over his village headmen. His position is strengthened by Government decree and he does not hesitate to threaten to use it if necessary. Although the prestige of chiefs is higher than that of any of the village headmen, the difference in prestige between any chief and his most important headman is not very great. They are treated with almost the same deference by the minor village headmen and commoners, and they are referred to by the same term (*mwenye* = chief). The chief or an important village headman

[1] See Chap. II, p. 34.

The chief or an important village headman
[601] is usually addressed by a kinship term, either *baba* (father) or
643 *ambuje* (master or grandparent). When he is referred to, his
622 name is not used. Village headmen are owners or wardens of
554 villages (*aryene misi*) but only those headmen of some standing
178 are referred to as *mwenye*.

Important village headmen, like the chief, are in mystical
643 danger from pollution by death. They cannot come to the hut in
622 which a corpse is lying; and they cannot eat the chicken which
554 has been brought to them by relatives of the deceased to announce
761 the death. Like the chief too, an important headman may be buried in a tomb in his village and not in the graveyard.

But an important element in their relationship nowadays is
643 that the Administration will support the chief against a village
622 headman when it comes to a trial of strength, and that a headman
554 these days is precluded by modern conditions from setting up
578 chiefdoms as he did in the old days. Village headmen therefore
691 must struggle for power against their fellows and the chief within the modern Administrative framework. Some attempts are made to resist the power of the chief but these are rarely successful. The dispute between Liwonde and Ndenda illustrates this.

Ndenda was an Nguru headman, who in 1947 had 284 tax-payers under him (Liwonde, the chief, had 186 in his village). Ndenda had come into Liwonde's area before the White invasion and had surrendered with his relative Mlelemba, to Liwonde. The second Liwonde had given him both initiation rights but, unlike his relative, he did not have the right to wear a scarlet headband.

In 1938 or thereabouts, Liwonde decided to move his village site from the Shire River to its present site about half-way up the Great Rift scarp. He sent two of his young men to look for a suitable site, and to plant some mango trees there when they had found one. Ndenda heard of this and sent one of his men to take Liwonde's men into custody. He took their hoes away and then told them to go back to tell the chief they were planting in his (Ndenda's) land. In due course Liwonde moved up to his new site, and asked Ndenda why he had taken the hoes away and whether he owned the country, i.e. was the chief. Ndenda now argued that Mlelemba's ancestors had been given the rights of chieftainship over this area and that the first Mlelemba in the area had given Liwonde some elephant tusks for these rights. Liwonde replied that the chief has a right to tusks and that many had given tusks to him but were not entitled for that reason to rights of chieftainship. Liwonde handled this situation by calling a meeting of the village headmen in the area. They assembled

and the claims of Ndenda were debated. The headmen supported Liwonde in his claim that the tanks were part of the chief's rights and that when Mlelemba had come he had come 'to get fire from the chief'. Liwonde then upbraided Ndenda for imagining that because he had so many followers he was a chief, and fined him 10s. for being insolent. 643 622 559 578 691

The struggle between Liwonde and Ndenda did not end however. Some years afterwards a man came to Liwonde and said that he wanted to live in his area. This man was a complete stranger and had no relatives there. Liwonde sent him to Ndenda's village. Later while living in the village, this man stole some cloth. He was arrested and Ndenda brought him to the chief saying that the chief was responsible for him. Liwonde told Ndenda that he was being insolent again and that the responsibility must rest with him because the man had married into his village. He ordered Ndenda to pay £1 to compensate the victims of the theft. This Ndenda did but in his view this was tantamount to being chased out of the chief's area. He therefore moved with his children across the boundary northwards into Jalasi's area, and told his unrelated villagers to follow him. They refused to leave Liwonde's area. He was helpless and could do nothing about it. He returned to Liwonde's area a broken man and died shortly afterwards. His eldest son took charge of the village affairs, but so far no successor has been found.

The struggle between Ndenda and Liwonde has some interesting features about it. The strength of the chief in his Government position is not as evident as it has been in other struggles, as, for example, between Jalasi and Kalonga, or between Chiwalo and Ntimbuka, in the cases I cited earlier.[1] It appears only indirectly. Ndenda did not appeal to the District Commissioner against the fine as he might have done if he had felt his position to be more secure. The case history also shows how Liwonde ranged his other important headmen, 47 per cent of whom were kinsmen or co-invaders, around him against Ndenda who was neither. It shows also that Ndenda's reaction to what he felt to be an injustice, typically enough, was to emigrate and to try to injure the chief by reducing his followers. When this failed he was defeated and it was his downfall, for, like a chief, 'a headman without people is nothing'.[2] 643 622 559 578

[1] Pp. 86 and 96.

[2] *Ndilamba mapa mapandola ilamba ngawo mulamba*: 'A chief who has no people is not a chief'—a saying frequently quoted to emphasize the dependence of the chief on his subjects.

2: Mitchell E-5 (1946-1949) 1956 FT7 Yao FT7

CHAPTER V

THE VILLAGE HEADMAN

Villages as Discrete Units

622
621

THE village headman is a key personality in Yao social structure. Viewed as an organization of villages, the social structure may be described in terms of the positioning of village headmen in relation to each other and to the chief. But the village headman is a representative of a corporate group, the village. The position he occupies in the structure as a whole, the role he plays in his interaction with other village headmen and the chief, and the prestige that he has in the community as a whole, are all derived from the village of which he is the representative, and in particular from the history of the dominant matrilineage of that village.

I am now considering, of course, all village headmen, however small their villages are, and not only the Administrative village headmen, as in the previous chapter. Each group which sets up a village recognizes one man as the 'owner' or warden of the village (*anyese musi*). The word '*musi*' (pl. *misi*) in Yao, refers primarily to the physical concentration of huts, but it is impossible for the people to separate in their minds the dwellings in a village from the people who inhabit them. In Yao, a deserted village is no longer 'a village'. It is called instead *lisuwe* (pl. *masuwe*),[1] a word which refers now not to the village as a unit, but to the collection of deserted and individual huts. The word *musi* or its diminutive form *kamusi* may be applied to a cluster of only four or five huts, or at the other extreme it may be applied to a large concentration of more than 500 huts.[2] The essential point is that the cluster of huts is occupied by a group of kinsmen who are independent of their neighbours. For example, a stranger may see a cluster of huts and ask, 'Whose village is that?' The reply may be, 'That is no village, they are only homesteads.'[3]

[1] From the verb *kusuwa*—to migrate.

[2] Large complex villages may also be called *mitinda*.

[3] *Malowe* (sing. *lilowe*), which I have translated as 'homesteads', strictly speaking refers to the households set up by married men.

2: Mitchell E-5 (1946-1949) 1956 FT7 Yao FT7

Further enquiries may reveal that this is only a section of a larger village, possibly a hundred or more yards away. 622

The boundaries of a village may not always be clear. Clusters of huts which are part of one village may be physically nearer another, but in the minds of the Yao, who see not only the huts but also the social relationships of the people occupying them, there is no confusion at all. As a general rule the villages are fairly compact and clearly demarcated from others, and even strangers have no difficulty in recognizing the autonomy of the group which is expressed in many different ways. MacDonald recorded that formerly a headman performed a certain amount of ritual which symbolized the unity of the village.[1] Much of this has fallen away, but the unity remains. 621

The ritual surrounding the foundation of a new village bears testimony to its persisting political significance. In this ritual the unity of the group, against other similar groups, including the village from which it has sprung, is expressed. On first arrival at a new village site the men build grass sheds, beginning with that of the headman. That night the headman pours a cone of sacred flour at the root of a tree on the site, and asks the spirits of his ancestors whether the site is propitious. Early next morning he examines the cone to see the answer. If a side of the cone has collapsed it does not augur well and another site is selected. If the cone is still whole it is taken that the spirits acquiesce, and permanent huts can be started. The headman then goes into the bush to find medicines[2] which he mixes with groundbeans. That night, with the medicated groundbeans in the hut, the headman has intercourse with his wife. In the morning those who are not sexually active come to the headman's grass shed to drink some water in which the medicine has been steeped and eat some of the medicated beans with a little porridge, which the headman's wife has prepared from the sacred flour. This medicine is called 'the medicine to strengthen the village' (*mtera wakulimbika mzi*). Until then all members of the village should have been continent but after this sexual relationships may be resumed. The object of the medicine is to prevent those 622 621 787 622 621 751 834 372

[1] See pp. 31–2.

[2] *Mlalangwio* and *nkuta*, two plants commonly used for protection against [834] *ndoka*. See f.n., p. 112.

2: Mitchell E-5 (1946-1949) 1956 FT7 Yao FT7

who are sexually inactive from contracting *ndaba*.[1] At the same time the headman gives each household a piece of the fire which has been newly kindled in the traditional way by rubbing two sticks together.

The mystical danger inherent in the act of setting up a new village is well brought out in the propitiatory prayer and the abstinence from sexual intercourse. Once again it is the village headman who must make the offering to his ancestors; and it is the village headman who has intercourse with his wife so that the effluvium from his sexual activity may permeate the medicine in the hut and so protect the villagers from *ndaba*. Lastly, it is very important that the whole village cooks and is warmed by one fire. 'We are of one fire' expresses the common origin of two villages; though in fact every time a new village is founded a new fire should be kindled. To bring fire from the village of origin is to bring sorcery, since the Yao believe that sorcery can operate between persons closely linked by kinship only. To have one's own fire is to be autonomous from other groups.

The Burdens and Rewards of Headmanship

MacDonald had the perspicuity to see not only that the village headman was the representative of a corporate group and that he represented this group to outsiders, but also that he represented external authority to his villagers. The village headman who in his person stood for the unity of the group, performed certain ritual acts which emphasized this, such as praying to the village ancestors. In spite of the decline of the ritual his position is still regarded as exceptional. Much, however, depends on the rank of the village headman. There may not be much difference in ritual observances and mystical dangers between a headman who has in his charge a meagre three or four huts, and a commoner. In the larger and more important

[1] This is one of the most important mystical concepts of the Yao. I have described this condition and its implications more fully in *Marriage among the Machinga Yao of Southern Nyasaland* (R.-L.I. Paper), forthcoming. Briefly it is a disease characterized by oedema which affects those who are sexually inactive when they are suddenly brought into contact with a person, or an object which he has touched, after having intercourse. The people most affected are the young and the old, i.e. those who cannot have sexual intercourse. Those who are capable of intercourse are expected to have sexual intercourse with a stranger, and so fortify themselves against this dread disease.

2: Mitchell E-5 (1946-1949) 1956 FT7 Yao FT7

villages, however, the headman's activities may be as circumscribed by ritual prohibitions as the chief's are. 622 554

The village headman is subject not only to mystical dangers but also to other dangers deriving from his position of authority. It is significant that villagers never go to a diviner to find out the cause of a village headman's death. When I asked informants why this was so, they said, 'Well, what's the use of it? He has enemies on all sides in the village who are trying to kill him with their magic.' In harmony with this view of village headmanship, the symbolic object which represents the village headman in the diviners' gourds I have seen, is a small ring of grass (*singwe*), a copy of the grass cushion women place on their heads when they are carrying loads. This symbolizes the ring of enemies which surrounds the village headman. The saying 'the tortoise defecates on the one who carries it',[1] usually applied to chieftainship, applies equally well to a village headman. 622 787 578 [illegible]

A village headman may expect little material benefit from his position of authority. If he is an Administrative village headman he may be paid a small annuity of 5*s.* or 10*s.*[2] Returning labour migrants may give him a blanket or a military overcoat, or perhaps a few shillings, but this is not usual. If he is not a strict Moslem he will almost certainly be given a pot of beer from every brewing made for sale in the local 'club house'. On the other hand, if an important stranger, particularly a White official, arrives in the village he feels he must give his guest a chicken. It is mannerly to reciprocate with another gift, but not all Whites know this, or, if they do, do not observe it. In particular if the chief comes to his village, he will be expected to entertain him and here can expect no recompense—the chief 'eats from his country'. 622 651 431

The Yao know that the position of headman is no sinecure. Frequently the one chosen to succeed refuses to accept the position, especially if he is well placed in employment. It is significant that the word for an heir is *litgwe*[3]—the one who is trapped. An 622 694

[1] *Ngwe jilwanda nayow tenjipili.*

[2] Until recently this was true. As I was leaving the field in 1949, I heard that the Administration had decided to abandon this system in favour of one in which only group headmen would be remunerated.

[3] Subsumptive form of the passive of the verb *lutgo*—to set a trap as for animals. This word is not widely known, especially among the younger Yao.

2: Mitchell E-5 (1946-1949) 1956 FT7 Yao FT7

622
292
516

PLATE V

Village headman, Nyenje, at his installation ceremony. He is not entitled to wear a scarlet headband but wears a coloured one instead. On his right sits his sister, on his left his wives, adopting the posture correct for an initiand—head bowed, eyes downcast, hands in the lap. A villager is dropping a penny into the cloth at the headman's feet while the headman's representative collects the pennies.

(July 1947)

[facing p.114]

2: Mitchell E-5 (1946-1949) 1956 FT7 Yao FT7

622 heir has to balance up the difficulties inherent in his position of
554 leadership, including his fear of sorcery, with its honour and rank.

Commoners respect village headmen in the same way as minor headmen respect their superiors. Headmen of important villages are given a special greeting by the commoners; they usually wear a distinguishing headdress; they sit on a mat alone or on a chair, while the commoners sit on the floor; they walk in front of commoners on the road; they sit under the chief's verandah while the commoners sit in the sun; and they are buried in the village, while the unimportant commoners are buried in the graveyard.

Outside their villages too they are accorded deference. It is not only their own villagers who must treat them in this way: all commoners must do so. They are accepted by the chief as important men and are treated as such.

The Headman's Installation Ceremony

622 The peculiar position of the village headman is brought out particularly in the installation ceremonies. When a headman dies his heir should not assume the name until he has been formally installed. This is expressed as 'to enter the name' (*kwinjila lina*). All installation ceremonies are similar and there are only minor variations from one ceremony to another. The following is a description of a succession ceremony recounted to me by an informant. It concerns the succession to headmanship of Cimombo, a headman of some rank in Nyambi's area. Cimombo had a village of 30 tax-payers, wore a scarlet headband, and had the right to hold a girls' but not a boys' initiation ceremony.

Some time had passed since the death of Cimombo, and his heir, though commonly known by that name, had not been officially installed. Eventually he grew impatient and went to his perpetual[1] elder brother Kaukutu of Nyambi's area, who also wore a scarlet headband, and told him that he was going to Cholo to find work. Kaukutu told him that he might visit the men at Cholo but he himself must not enter employment there. The heir left for Cholo. As soon as he had gone Kaukutu collected his relatives and discussed the succession. They decided to get

[1] The relationship between some personalities in the social structure, originally kinship, becomes fixed and is perpetuated by their successors. See p. 122.

2: Mitchell E-5 (1946-1949) 1956 FT7 Yao FT7

Nyambi's formal permission to install the heir as Cimombo. Nyambi told them to start preparing malt for the 'beer of succession' and to tell him when it was ready. Kaukutu then sent a man to Cholo on a bicycle to call Cimombo back to the village. One Tuesday, the day after Cimombo returned, Kaukutu reported to Nyambi, who told him to tell the women to prepare the beer, since the installation ceremony would take place on Saturday. Nyambi sent his perpetual sons Makoka and Ncimba to officiate on his behalf. These two men were important village headmen, Makoka having the right to wear a scarlet headband though Ncimbu had not.

On Thursday, Makoka and Ncimbo came to a place about three miles from the village. They had four women with them, one of whom carried a sacred basket (*ciselo cambepesi*). Ncimbo sent a message to Kaukutu to say that they were waiting, and he told the heir that he was wanted along the road where a meeting was being held. When the women saw Kaukutu and the heir coming to the place where Makoka and Ncimbo were waiting, they ran to hide in the bush. The heir sat down under a mango tree and Makoka went up to him and begged for some snuff. Before he had time to take the snuff bottle out of his pocket, the women came out of the bush, Makoka got up and struck the heir on the forehead with his fist, knocking him to the ground, took some flour from the sacrifice basket and sprinkled it on the heir, shouting, 'This is Cimombo—he is risen from the dead!'[1] They put him in a hammock and carried him back to his hut in the village amidst wild exultation. They put him on his bed and made him stay there. Later, Mkoka and Ncimbo came in and started to deliver a series of homilies on his position as village headman.[2] They pointed out that from that day he was a chief (*mwenye*), a headman who had the right to wear a scarlet headband (*ciniwesi shambendera*). Thenceforth, he was not to go to funerals, or at least not into the hut in which a corpse was lying. If his child were to die while he was in the hut he must not move until other people had come in. It was only when a headman of similar rank died that he might go into the hut. They advised him particularly that he would have to look after his village and told him that he should

[1] *Cf. Cimombo ahoile—afuwire hulufe.*
[2] *Kusuda miyango*—to teach the customs.

2: Mitchell E-5 (1946-1949) 1956 FT7 Yao FT7

622 neglect neither his sorority-group nor the husbands in his village,[1] that his sorority-group and his village were his garden and he must take care of the young plants in it. The husbands were the watchmen who look after the women in the village. A headman dare not take sides or be unfair, nor must he talk behind people's backs. He must take care to settle differences amicably by discussion at meetings. They advised him not to pay too much attention to his wives who may have quarrelled with his sisters and tell him that they have been insulting him. When he hears a report like that he may be unfair to his sisters and people will say that he has broken his village through listening to nonsense. This sort of instruction went on through the night.

On Friday when the beer was brewed, Mlamba and Mbalwe, both headmen and perpetual sons of Nyambi, came to the village [344] and told the men to build a small grass shed for the successor to sit in. This the men did, and the women were told to plaster it and clean the huts out for the strangers who would be coming to the ceremony. On Saturday morning before cockcrow, Makoka and Ncimba got up and told the women to cook a big pot of porridge because they were taking Cimombo to bathe and when they returned they would want to find porridge ready. [415] Makoka took some medicine called *mkulumo* in a bark container (*likungwa*) into the toilet enclosure. He put the medicine into [751] two jars of water and told Cimombo to wash himself in it daily as he was an important headman, and it would strengthen his body.[2] After Cimombo had washed he went back into the hut 622 where a mat was spread on the floor and on it were a dish of 266 porridge and three dishes of relish. Makoka and Ncimbo told him to take a little porridge, dip it into one of the relishes—whichever he chose—and eat it. Cimombo did so. They did not tell him that one of the dishes contained human flesh.[3] When he tried the dish of human flesh he vomited and all the villagers cried with joy, saying that he was a good chief because he had

[1] *Mlumbe jao ni akamwini wao*—the meaning and significance of this in the village context is explained on p. 183.

[2] This is a euphemism for protective medicine against sorcery.

[3] The immediate question is: Where did the human flesh come from? No informant could tell me and I am inclined to believe that one of the dishes is 'ritually' made into human flesh for this ceremony. This special ceremony was always spoken about as if it were secret, especially from White people.

2: Mitchell E-5 (1946-1949) 1956 FT7 Yao FT7

vomited human flesh.[1] They said that they had a strong headman and that they could trust him; he was a good headman without witchcraft. If he had been a sorcerer they would have kept scolding him until the next morning.

About two hours after sunrise the people gathered and started dancing. At about this time Cimombo was brought out of the hut and put in the grass shed which had been built for the occasion. This was the climax of the ceremony.[2] He sat on a chair in the grass shed with one of his two wives on either side. Makoka then started a chant, exhorting the visitors to come to throw pennies at Cimombo's feet. Some of the people there made speeches about the type of behaviour they would expect from him. Then Nyambi arrived from the court village in a ricksha. When the noise had subsided he told the people that if they disobeyed Cimombo it meant that they disobeyed the chief. He emphasized the importance of the rank of the new headman. After the speech he presented 12s. to Cimombo which was received on his behalf by Ncimbo. Nyambi then left and the ceremony was over, but the people remained to dance and drink beer.

This description of the procedure following the 'coming out of the hut' is somewhat sketchy. The interaction of the headman and his villagers on this formal and ceremonial occasion is of great interest and importance. During the entire ceremony the headman adopts the pose which is appropriate for any Yao initiand. His hands are on his lap or on the arms of the chair and his head is bowed forward with eyes downcast. He neither speaks nor moves. His attendants, when necessary, wipe the sweat off his face or chase away the flies. The other occupants of the mat, who may be his wives, and sometimes his heir, adopt similar postures. In contrast to this, is the behaviour of the villagers who run about shouting wildly, the men discharging muzzle-loading guns, and women ululating in the typical Central African way.

Before the new headman comes out of the hut his mentors

[1] This is a test based on the witchlore of the Yao, who believe that sorcerers kill relatives with magic and then share out the flesh of their victims with fellow sorcerers in ghoulish feasts.

[2] Called the 'coming out from the hut' (*kukupoka nyumba*). It is of course the first public appearance of the headman in his newly assumed status.

622 impress on him the difficulty of his position, and when he is taken outside some of this is repeated in public. At Nkacelenga's installation ceremony in December 1946, which I attended, the following incidents took place. Shortly after he was taken out
622 of the hut, Cigunda, one of the officiating headmen, said:
537 'Younger brothers of Nkacelenga, are you happy that Kambiri [1] has an elder brother? You women, have you cooked beer so that you can have your village headman?' In reply the men and women clapped their hands and a few came forward to throw some coppers into a cloth at Nkacelenga's feet. Cigunda went on to say, 'From to-day no woman will be impudent to the chief, because you are all of the same womb. All you men listen, only this man is your village headman!' Cigunda now turned to Nkacelenga who did not change his posture in the least. 'You village headman Nkacelenga, don't listen to what your wife says, because she will fight with your sisters and tell you that they have been cursing you. You should make enquiries when you have heard these things because you are a big man [i.e. important headman]. From to-day onwards you are a big man. Every person will be trying to spoil your name by saying that you are a bad man. You need to be patient and easy-going.' Turning to the public, Cigunda said, 'Even you husbands [*akamwini*] do not listen to what your wives say if they try to traduce the village headman, because some husbands can break the village.' Thereupon one husband got up feeling around for a penny, found he did not have one, and with much ostentation borrowed one from a fellow-husband sitting next to him. He then came forward to where Nkacelenga was sitting and said, 'You say some husbands can break a village. Is that true? But husbands build the villages? They can't break the villages.' Then very deliberately he threw the penny into the cloth at the headman's feet and went back to his seat. His speech was greeted with acclamation from the husbands. Cigunda said nothing after that and the ceremony was over.

In September 1948, during the installation ceremony of Maputa,
622 one of Kawinga's less important headmen in the northern
533 part of his area, the significance of the relationship of the headman to his relatives for the continuation of the village as a whole, was brought out more clearly. After the headman was

[1] A perpetual brother of Nkacelenga.

2: Mitchell E-5 (1946-1949) 1956 FT7 Yao FT7

brought out of the hut, as always, songs were sung and speeches were made. One of the songs was : 'A tree when it grows, grows with its branches.'[1] This is a reference to the dependence of the village headman upon the increase of his relatives for an increase in his rank. The Yao compare kinship with a tree, the component segments of the maximal lineage (the tree) being the branches. Then one of the officiating headmen mentioned that there were many sisters' sons of the old Mapata but that Kawinga and Chiwalo had selected the one on the chair to be the headman. He then exhorted the others neither to be jealous nor to resort to sorcery, but to exalt the name[2] that it might live long. This was followed by a song which introduced a second theme, 'A husband however rich he becomes here, cannot climb high.'[3] This song emphasizes that the uxorilocal husbands of the village can never achieve rank outside their own matrilineal villages however rich they are. The officiating headman then went on to say that some women rebuke their husbands when they speak subversively, but others side with them against the village headman. He told the husbands and women that they were wrong to do this and that they must desist. After this followed a public rebuke of the village as a whole. One of the younger brothers of the new headman pointed out that when the mother of the previous Mapata had died she had been buried in the graveyard and not in the village. He rebuked the villagers and told them that, when the present chief died, he should be buried in the village. A man who had been charged with neglect by his wife (his cross-cousin) paid the headman the compensation which he had refused to pay to her. One of the headmen then exhorted the villagers to respect their headman; to send someone to accompany him on his journeys to see to his wants; never to allow the headman to carry a gift he had been given, and so on. The ceremony ended when Kapaloma, who was representing the chief, hinted that Mapata might be allowed to wear a scarlet headband in the near future.

Village headmen represented the chief at Nkacelenga's and

[1] *Mtere pandulule ukuwa ilimenyanshi.*

[2] *Kwenya lina*—to come the name to climb.

[3] *Tonde, tonde, ukumwiwi nanilile mume ngabwende ini.* Tonde is the word for billy goat and its use here emphasizes the procreative functions of the husband in the village.

2: Mitchell E-5 (1946-1949) 1956 FT7 Yao FT7

622 Mapata's installation ceremonies. When an important headman succeeds, however, the chief himself usually makes a short appearance and talks to the people. When Nyenje was installed in July 1947, Kawinga attended. Nyenje has the same clan-name as Kawinga and is an Invader. In 1947, he had 109 tax-payers under him; he held rights to both initiation ceremonies, but he did not have the right to wear the scarlet headband. Kawinga arrived at 11.18 a.m. before Nyenje had come out of the hut and he went straight to it and entered. He emerged at 11.45 and sat on a chair under a drying stand. Kangomba, his head *nduna*, came and sat with him. In the meantime the new headman was brought outside and seated on a chair. Sitting on either side of him on the mat on which his chair was placed, were his two wives. Nsanama,[1] a minor village headman of the same clan-name as Nyenje, officiated. The penny-giving now started. At 12.10 Kawinga got up and walked over to the crowd, and 622 silenced them with a sharp whistle. They gathered round to 527 hear his speech. He pointed out that the dispute about the succession to their headmanship had been going on for three or four years and that there had been two candidates, one of whom he had selected as successor because he knew he would be sensible and wise, and would look after his people in the village and in the smaller villages under him. He said that he had recommended this man to the District Commissioner who, with the Governor's sanction, had supported him. He did not therefore want to hear that the man had fallen ill; he dealt strictly with sorcerers. He said that respect started with the relatives: brothers and sisters, the husbands and the boys and girls must also respect 'the chief'. They must not mention his name but [551] refer to him as 'the chief'. Kawinga went on to say that some husbands were evil and could split a village like this one, by telling lies to the headman and falsely advising the headman that his sisters were talking behind his back and insulting him. When he hears this he may break the village by ill-treating his relatives, thereby causing them to migrate and leave him all alone. Kawinga told the people not to go talking in other villages about the man who was in the chair; that sort of behaviour only led to sorcery. Finally, he warned them to help the headman in obeying the instructions of the White people who

[1] Not Kawinga's relative of the same name.

2: Mitchell E-5 (1946-1949) 1956 FT7 Yao FT7

came to the village and in accommodating strangers while he was away. He told them that disputes were to be referred to the headman immediately. Turning to the new headman he said he had to report anything unusual that occurred in the village, and that he was authorized to arbitrate in small cases in his and surrounding villages. 622 537

Kawinga then left the centre of the crowd and went back to where he had been sitting. Then an officiating headman, addressing particularly the women, said, 'Only a few months ago there was a quarrel between the present chief and his elder sisters. These women ran away to Malemia's area in Zomba district without reporting the matter to anyone. This must stop. With effect from to-day any troubles must be brought to the headman without delay: he will settle them. A tree cannot grow without branches and a headman or a chief cannot be known without his people's respect. Do not behave as children. This man cannot do things alone: he must have your help. We leave him in your hands and we do not want to hear about any more trouble. Follow all the instructions the chief has given you.' He took his leave and Nyenje was taken back inside the hut. The people now dispersed to where there was beer and dancing.

The Structural Reincarnation of Village Headmen and Perpetual Relationships

There appear to be a number of significant aspects of the installation ceremonies. First, there is the ritual death and rebirth of the village headman. The heir is 'killed' by a blow with the fist on the forehead, but is reborn the headman. The Yao do not believe that the spirit of the headman is inherited by the heir;[1] he has only eaten the name.[2] But socially he is born again and, logically consistent with this idea, he takes the wives of his predecessor without further marriage negotiation. He also takes over the property of the dead man, his clothes and his huts. 622 829 [587 428]

But this structural reincarnation of the headman has the important implication that the headman is immortal. He shares this characteristic with the group of which he is the leader. When 622 829 601

[1] As the Bemba do. A. I. Richards, 'Mother-right among the Central Bantu' in E. E. Evans-Pritchard and others, *Essays Presented to C. G. Seligman*, Kegan Paul (London, 1933).

[2] *Kulya lina* is a synonym for succeeding to headmanship.

2: Mitchell E-5 (1946-1949) 1956 FT7 Yao FT7

622
829
601

a village dies, so then does the headman die.[1] In his rebirth, he occupies the status that his predecessor held before he died, in both the kinship system and the political structure.[2] His mother's brother's children whom he formerly called 'cross-cousin' he now calls 'my children'. His mother's younger brothers whom he previously called *akwelume* (mother's brothers), he now calls 'my younger brothers' (*apwanga*), and so on. By the extension of this principle, an heir succeeds not only to the status of his mother's brother but also to that of the first of his name. Cigwaja VI, for example, calls the descendants of his mother's mother's mother's brother (Cigwaja IV) 'children'. In fact, he calls the children of any Cigwaja 'my children'.

Within the political field the same principle is used in establishing what we may call 'perpetual relationships'.[3] There are some village headmen who express their relationships to each other or to the chief by a kinship term. The headman Majaja, for example, is the 'son' of Nyambi. In fact, the first Majaja to establish a village was the son of the second Nyambi. The present Majaja is the third incumbent and three Nyambis have died since Nyambi II. Nevertheless, by positional succession both of the present incumbents are translated to the formative phase in their relationships, which is thus perpetuated to-day, and will be, in their view, for ever. The present Liwonde calls Kawinga 'elder brother'. Kawinga is in fact his mother's mother's mother's sister's son. The first Liwonde was the first Kawinga's younger brother. They invaded Nyasaland together. At this significant point in their history their relationship became fixed and then perpetuated in the political structure. This relationship, though phrased in a kinship term and moulded to some extent by the norms of kinship behaviour appropriate to the term used, is in reality political, for it fixes the relative positions of two villages through their headmen.

[1] Sometimes after a village has broken up and the name has not been heard of for some years, some survivor revives it and resuscitates the village.

[2] Dr. Richards calls this 'positional succession'. See 'Some Types of Family Structure amongst the Central Bantu' in A. R. Radcliffe-Brown and Daryll Forde (eds.), *African Systems of Kinship and Marriage*, Oxford University Press for the International African Institute (London, 1950), 224.

[3] This term was suggested by Dr. I. Cunnison's use of it for a similar practice among the peoples of the Luapula Valley. See his *Local Organization on the Luapula Valley*.

2: Mitchell E-5 (1946-1949) 1956 FT7 Yao FT7

The Rôle of the Chief in Headman's Installation Ceremonies

The second significant aspect is the importance of the chief in the installation ceremony. In each ceremony the chief has to give his formal consent to the succession. Note that the chief is approached by one of the headman's relatives, so that at this level, in spite of Kawinga's statement,[1] the succession dispute is over and the heir is decided upon. The chief's formal consent, his formal fixing of the date of installation, his personal appearance or the appearance of his representative, and his giving of the gift, all serve to set his official seal on the installation and to recognize its political significance. 643 622

The chief recognizes the leader of the group, both in his actions and his words. He also sees in the headman his representative, as when Nyambi said, 'When you disobey the headman you disobey me,' or when Kawinga said, 'Nyenje, you are responsible to report to me any unusual thing which occurs in your village here.'

When a chief comes into a village it is the village headman who entertains him. I was told that if the headman or his representative were away, the chief would be given no hospitality at all, because the villagers only entertain him through their representative, the village headman. Though the chief himself may not frequently visit villages, his representatives are constantly coming and going on his errands. Where affairs of day-to-day administration of the chiefdom are concerned these representatives are usually the court messengers, who may be paid from Native Authority funds or from the chief's private funds. The chief's representative in his tribal capacity, however, is usually his *nduna*, but it may be practically any village headman whom the chief selects. For example, he may send his *nduna* or one of his satellites as his representative to a *mapeto*.[2] He sometimes sends his representative as a referee to divinations and to chicken poison-ordeals following accusations [574] [644]

[1] Kawinga had a say in Nyenje's succession because he was a clan-relative. I have evidence that some lobbying had been going on because the successor that Kawinga chose was not chosen by Kawinga's relatives.

[2] A meeting held shortly after a funeral to decide whether death has been caused by sorcery or is due to natural causes.

2: Mitchell E-5 (1946-1949) 1956 FT7 Yao FT7

643 of sorcery, but the representative takes no part in the proceedings
622 at all; he is outside them and is there merely to see that affairs are conducted fairly.

The Value Attached to the United Village

622 The third aspect, the dominant theme in all speeches, is
621 the emphasis on the position of the headman as a leader of a corporate group, and his duty to maintain its unity. The chief and the officiating headmen warn the successor about the possibility of conflict in the village. They advise him to settle differences at once lest these should lead to a split in the village.
[591] They also warn him that his wife's relationships with her sisters-in-law, living as she is, virilocally,[1] are a danger point and may lead to trouble. The danger from the 'husbands' who are members of other villages and whose loyalties do not lie directly with the new headman is made manifest to him. At Nyenje's ceremony the officiating headman remonstrated with Nyenje's sisters because some had left the village without giving him an opportunity to settle their differences. The frequent references to the danger of sorcery are also references to the fear of the breakdown of the village. The villagers are exhorted to respect the headman and to be obedient to him for the general welfare of the group as a whole. Regularly the image of the tree and its branches is invoked, and it is made clear that the headman is dependent on his people for his rank and status, and they on him for their unity.

The disintegration of a village in Yao eyes is a sad affair and
621 the disruptive forces in it must be very strong before a section
166 leaves it. People who want to leave a village are usually remon-
627 strated with and told not to 'break' it. In the frequent conflicts between the headmen and their younger brothers the arbitrators usually try their utmost to prevent a migration. They always award compensation to the injured party and tell the disputants to live in peace, and not to leave the village. Frequently, however, the leader of the dissident group prefers to refuse the compensation money, which is often as much as £6 or £7, and

[1] i.e. living with her husband's kin. I use 'virilocal' and 'uxorilocal' in preference to the older but ambiguous terms 'patrilocal' and 'matrilocal'. See Richards, 'Some Types of Family Structure amongst the Central Bantu', 208–9.

2: Mitchell E-5 (1946-1949) 1956 FT7 Yao FT7

strike out with his adherents to found a new village. A sum of £6 or £7 is a considerable amount in everyday Yao life where the annual cash income of the average individual is not much more. The leader of a dissident group is prepared to forgo this wealth to get one foot on to the lowest rung of the political ladder—that is by becoming a village headman. 621 166 627

Obversely there is a great deal of sentiment attached to the idea of a united village. To the Yao way of thinking a village is broken by fighting or death, and these evils are linked by witchcraft beliefs. The association of death and the break-up of the village is brought out clearly by the funeral ablutions of villagers after the burial of one of their number. An important ingredient in the medicine with which the mourners wash themselves after the funeral, is *cikula*. It is the earth from a particular type of termitary which is usually about 12 to 18 inches high, upright and almost cylindrical. The crust is very brittle and it is comparatively easy to chip off a piece. When this is done a mass of internal chambers and passages is revealed. The soldier ants, unlike those of other species that retreat into the darkness of their passages as soon as they are exposed, come into the open daylight and swarm in confusion over the fractured termitary. When I questioned my informant about *cikula*, he kicked the crust off the top of one of the hills and said, 'See all the houses in the village of the ants? I have broken their village. So it is with death. It breaks the village.' 621 764 783 825

The Yao believe that death 'breaks the village' and that conflicts through sorcery lead to death. Therefore, conflicts are the real cause of village splits. Hence differences must be settled immediately if the village is to persist, because if they last too long one of the aggrieved parties is sure to start using sorcery against its opponents. Those who do move away, go to a distant place because they believe that sorcery operates only where there is social interaction. But the fear of sorcery on the other hand is just as strong a force in maintaining the physical unity of the village. It is while the migration is being planned that sorcery is most likely to be used. This is particularly so if the village break is taking the form of a lineage split. This happened, for example, in Lupunje village. 621 754 626

Kalambo, the sister's son of Lupunje, wanted to leave the village and had gone to seek a suitable site. When he returned he found that 621 626 753

2: Mitchell E-5 (1946-1949) 1956 FT7 Yao FT7

621 his mother was ill and had gone with Lupunje's younger brother to
626 the diviner to find out the cause of the illness. The diviner indicated
753 that Lupunje thought that Kalambo was not showing him the proper respect. Lupunje knew that his sisters had lost their value in the lineage since they had stopped bearing children, whereas Kalambo's sisters were still reproducing. His malice had caused the woman's illness. When Kalambo got home he asked his mother's brother to blow water out of his mouth [1] and help him to prepare some medicine for the sick woman. This Lupunje did and the woman recovered immediately.

Shortly afterwards Kalambo remonstrated with his mother's brother for causing the illness of his sister, but Lupunje said that he had no control over it: the spirits had brought it on her. Kalambo knew that he could do nothing and abandoned the idea of building his own village. He knew that there was bound to be more illness if he carried on with his plan.

182 Clearly the belief in the mystical powers of the ancestors or of
621 sorcery is a force which prevents sections from breaking away
626 from the village. A break follows only when opposition within the village has reached sufficient pitch to force one of the sections to take the risk of illness, rather than to continue living in the village. Sometimes the dissident group comes back because further deaths at their new village site convince them that their action was wrong.[2]

Effects of the Headman's Personality

622 Whether a village maintains its unity or not, depends very largely on the personality of the headman. This is why the officiating headmen and others at the installation ceremonies are so insistent that cases should be settled quickly. The main duty of a headman is to maintain harmonious relationships within his village and to see to the welfare of its members. All severe [787] illnesses are immediately reported to him, and so are the results of all divinations. He usually sends his representative to divina- [764] tions concerning kinsmen not related to him matrilineally. He is immediately notified of all deaths and he organizes the funeral rites. Squabbles are brought to him for arbitration and even
622 where squabbles are settled by kinsmen in the village, usually the
692 headman is formally told of them. Frequently marriage diffi-

[1] An act which recants malice. See Chap. VI, p. 139.
[2] See the case history in Chap. VI, p. 153.

culties are settled by the marriage sureties[1] who only report to him after the affair is settled. In disputes of unusual gravity, the headman may call in unrelated persons[2] to arbitrate, but he himself must be present. 622 692

His own behaviour is expected to be exemplary. Any deviation from the norm is likely to be strictly censured, not only by his own villagers, but also by other village headmen, who may say, 'Important men do not behave in this way.' A man who had an argument with his sister's son was told this. He had taken the dispute to a neighbouring headman who decided against the village headman and rebuked him for behaving in a way not consonant with his position. Village headmen should be above squabbling with their villagers. A village headman who was also a leech had virtually raped a woman whom he was treating. He tried to maintain this was part of the treatment. Her matrilineal relatives reported the matter to the headman of her village and he brought the errant headman in front of the chief who said, 'You are wrong to do this when you are an important man. You are a big man and you act as a commoner does. You ought to be able to show the commoners how to behave.' He was made to pay a compensation of £2 10s. and fined 10s. Had he been a commoner he would have been made to pay a compensation of only 30s. 622 577 558 684

The ultimate sanction to which all headmen are subject, is that their people will leave them if they behave badly. This was the fate of Cikumba. 622 558 837

In 1944 Cikumba had a village of about 30 huts. The son of the first Cikumba, Meya, had two wives who were living virilocally in Cikumba's village. Meya had enlisted in the army. While he was away, Cikumba, the village headman who was Meya's father's sister's son (though he called him 'father' because of positional succession), started taking Meya's two wives to beer drinks. Meya's sister one day asked Cikumba about his behaviour, but he only said that Meya could not do anything as he was far away. Things had gone too far, however, when one morning he was seen coming out of the 166

[1] The representative of a spouse in all affairs arising from conjugal relationships. They are usually senior matrilineal relatives. See Chap. VI, pp. 176–7. Their rôle is discussed fully in *Marriage among the Machinga Yao of Southern Nyasaland.*

[2] *Mundu jumpanshali*, i.e. a person from outside.

2: Mitchell E-5 (1946-1949) 1956 FT7 Yao FT7

142
291

PLATE VI

A typical village headman. He is dressed in white with a cloth thrown across his shoulder. He wears a white cap. This headman is not Government recognized, nor has he the right to wear a scarlet headband. He has no initiation rights.

(November 1946)

[facing p.128]

622 558 637 166 but of one of Meya's wives. Meya's sister wrote a letter to tell him of this and he replied that he could do nothing until he returned. In 1946, Meya returned to be demobilized. The third night after his return he questioned his wives about their fidelity during his absence. They at first held out against him but before long he intimidated them into admitting that they had slept with the village headman. Meya now went to complain to Maputa, who was Cikumba's perpetual mother's brother, and he said that he would come to the village the next day.

When Maputa came he confronted Cikumba with the accusation. Cikumba denied it until Maputa called the women. When they confronted Cikumba was forced to admit his guilt. Maputa now decided to call in an arbitrator, Isa, an important but unrelated headman who lived close at hand. Isa said he would come the following day when the matter could be thrashed out. When Isa and Maputa came they asked the women about the affair in public. They admitted the charge and Cikumba did not deny it. Isa then remonstrated with him for being a bad man and said that he was ashamed to hear about it. Cikumba had to pay £6 10s. to the injured man, Meya, who, however, refused to take it. He argued that Cikumba ought to have behaved as a father to him. But Cikumba had not. He, Meya, could not remain living in the village because his wives would be as Cikumba's wives. Isa said that he could not object because Cikumba had caused the trouble and had broken the village himself. How could he complain? Meya took two-thirds of the huts in the village away with him.

The Headman as a Representative of a Corporate Group

622 687 The headman is not only responsible for keeping the peace between the members of his village, but he is also supposed to control his members in their relationships with other villages. If members take corporate action against other villages, even if they do so without the consent of the headman, the chief will consider the village headman responsible. This was brought out clearly in the relationships between Cikoja, Maputa and Masimbo in Chiwalo's section.

622 687 913 326 Cikoja and Maputa are two of the more important headmen in Chiwalo's section. Masimbo is a minor village headman who lives in Maputa's village area. The quarrel arose over the question of fishing rights in a small pool lying between the two main villages. This pool was excavated by Cikoja and his villagers in 1914 during

2: Mitchell E-5 (1946-1949) 1956 FT7 Yao FT7

a severe drought, and he claimed the rights over it. One day in 1950, 622
some boys from Maputa village came down to the pool with fish- 689
poison. At about noon some boys from Cikoja's village arrived with 423
their traps. When they saw the Maputa boys using fish-poison they 226
told them to desist and tried to take away the fish. This led to a fight
in which knives were drawn. One of Cikoja's boys ran back to tell
him, and in anger he came down to the pool with some adults. The
Maputa boys now ran back to Masimbo who immediately assembled
some men and came to the assistance of the Maputa boys. The two
groups joined battle immediately and there were casualties on both
sides. Maputa heard about this and came running down to separate
them.

The next morning they took the dispute to Chiwalo. He started 622
by asking why Maputa had used fish-poison in someone else's pool 689
without permission. Maputa replied that he did not know that his 423
boys had gone down there. He said that Masimbo had told him
about the conflict and that he had gone down to stop it. He was
not aware of it before. Chiwalo now turned to Masimbo and said,
'Masimbo, you are in the wrong. You have caused the children to
suffer. You went to make war because of your children. The people
of Maputa, they are in the wrong because they did not report to the
owner of the pool.'

When Cikoja was asked if he had anything to say he only replied
that he was ashamed of what had happened because he was the first
in the area, and until then they had been friends. The conflict had
arisen because the children had done something which they did not
know was wrong.

Chiwalo ordered Masimbo to pay 5s. and Maputa 6s. to Cikoja.
He then told Cikoja that he should brew some beer and share it with
the other two villages so that friendship might be restored and the
children might go from village to village without fear. The chief's
instructions were carried out and normal amicable relationships were
re-established.

The way in which the villages acted as corporate groups is well 622
illustrated by this incident. The responsibility of the village 689
headmen for the activity of their members also emerges. The
chief found Masimbo in the wrong for causing the fight, but he
also fined Maputa because his boys had used fish-poison. The
fines were paid by the village headmen, Masimbo and Maputa,
to the village headman Cikoja, for they are the representatives
of the corporate groups under them. 621

In no other field of village relationships is the corporate 423

2: Mitchell E-5 (1946-1949) 1956 FT7 Yao FT7

621 identity of villages more clearly seen than in the arguments that
423 arise over rights over waterholes. These are usually dug next to a stream or a marsh, or in some other place where the water will percolate into them. The physical labour of digging a waterhole establishes the rights to it, and a village retains these rights if at some time in the past any of its members had dug it.

621 In normal years, and of course during the rainy season, there
423 is enough water for all and no friction arises, but in drought
685 years difficulties arise. Friction between Nampeya and Cikuwita arose in this way in 1933.
622

During the dry season the waterholes that were normally used were drying up and the people of Nampeya decided to open up a disused one. When Cikuwita's people saw Nampeya's people using it they came to use it too. Nampeya's women saw this and told the other people they had no right to use the waterhole. Words passed between them and eventually there was a tussle between the two groups, during which a waterjar of one of Cikuwita's women was broken. Cikuwita's women said they would take the case up to Ntibwilibwi, a headman of local importance, and when they returned to their village they complained to their headman who took the complaint to Ntibwilibwi. He sent a message to Nampeya to arrange a date on which the dispute might be settled. On that day the members of the two villages gathered at Ntibwilibwi's hut. The dispute was settled amicably: the person who broke the waterjar was ordered to take a chicken and give it to the owner of the jar, and Cikuwita was told to gather his people the next day and make them dig a waterhole of their own.

The villagers in each of these situations had acted with regard to their fellows primarily as members of villages. They had seen themselves as members of corporate groups and had interacted as such. In the dispute in which the jar was broken, the individual responsibility was fixed and compensation awarded, but at the same time the village headman was instructed on behalf of his villagers to make a new well and thereby ensure peace in the future. In all these disputes, however, the headman had appeared as the responsible representative of his village.

2: Mitchell E-5 (1946-1949) 1956 FT7 Yao FT7

CHAPTER VI

THE LINEAGE FRAMEWORK OF VILLAGES

Matrilineal Kinship

TO outsiders a village appears to be an undifferentiated whole and in interaction with other villages it acts as such. But within the village, social actions are determined by membership of kinship groups whose genealogical relationships to each other differ from one village to another. The village headman who represents the unity of the village is usually a kinsman of all the villagers, but the links to him are different and diverse. Yet he commands the leadership of the village, not so much by his kinship to the villagers, for a villager may have other mother's brothers and fathers in the village, but by his position in a political structure, where he represents the village to outsiders and to external authority.

Yao social groups are organized on a principle of matrilineal descent but we shall see that, although this is the main principle, it is modified by the general political mould into which villages are forced. We have already seen that, at least in the lines of important headmen, clan-names are inherited from the mother.[1] This is the simplest and most direct way in which matrilineal descent affects social relationships. The principle of matrilineal descent is far more important in organizing the smallest group which acts corporately within the village—the matrilineage.

A significant feature of Yao social structure is that the village organization tends to cut across lineages. In the process of segmentation of matrilineages, which I shall discuss in detail later, new villages are formed. When this happens the dissident kin usually set up their homesteads a good distance from the original or parent village. The links between different sections of the same matrilineage, therefore, tend to become lost, and the new village, conscious of its own identity and unity, gradually loses its links with the parent village. The general structural relationship between the villages as wholes, and their headmen as their representatives, is fixed at the time when the division takes place, and this is remembered. But the actual genealogical

[1] See Chap. III, p. 71.

621 links are usually forgotten, so that the two villages are known to
613 be related, but it is not certain how. The matrilineages to which the two headmen belong recognize this forgotten link and they refer to this relationship as *ulenge dukumbana*, which I can only translate as 'distant relationship'. In Cikoja village, for example, the headman's matrilineage, or as I shall call it, dominant matrilineage, is related to at least two other villages. These are Mbande and Cibwana Kawinga, both in Jalasi's area. The links with these two groups cannot be remembered. The first Mbande and the first Cikoja, I am told, had the same mother. Neither the present Cikoja nor any of his villagers could remember the genealogy earlier than the fourth Cikoja. A section of Mbande village, nevertheless, lives in Chiwalo's area near Cikoja and there is a fair amount of co-operation between the two villages to-day. Cibwana Kawinga is by the same explanation a 'mother's brother' of the present Cikoja; he is called in whenever there are serious disputes in Cikoja's village, and brings the force of a senior relative to bear on Cikoja.

621 People who are thus vaguely and distantly related may express
613 their kinship in many ways. For example, they say that they are
601 'the people of one founding ancestor or ancestress'. They may say that they are *aina Mazumba*, 'the people of *Mazumba*', or *aina Nkopo*, 'the people of Nkopo'. *Mazumba* and Nkopo here may be either a woman from whom they are descended, or a man who was the leader of the group when they first moved into the area. Where a man is mentioned as the founder the term is used for the descendants of the man's sisters. But like most terms for social groups its meaning changes in different contexts. In another context, for example, *aina Cikoja* means simply the people of Cikoja village and has no reference to matrilineal descent at all.

Other terms are more specific. The word *mpaga* may be used in the sense of one type or kind, as *pampaga pamo*. An arbitrator at an intra-lineage dispute said, for example, 'You people who have a case are people of one kind [*dumbo pampaga*]'. The word *ciyapo* may be used in much the same way. But even here the reference may be to the entire span of matrilineal relatives whose relationship is vague and uncertain (*dukumbana*); or it may refer to a section of relatives having one known ancestress; or it may even refer to a segment within the section.

Among the relatives of the largest order of kinship (*ifyapo*) there is a bond only slightly more intimate than that among people who have the same clan-name. There are none of the jural and moral obligations which characterize membership of a matrilineage which is a part of a village. The larger group, for which there is no exact Yao-term, may be looked upon as a maximal lineage. It is characterized by a relationship of a more definite bond than that of having a common clan-name, but the members may still marry.

The Matrilineage

It is within the village that the matrilineage operates most closely. The distant matrilineal link which connects villages such as Cikoja, Mbande and Cibwana Kawinga, is set in a context of inter-village relationships and is therefore part of the political system. Within the village the matrilineage becomes a corporately acting group of a different dimension. It is in this order of lineage within the village that we have the set of relationships described by Professor Fortes as applying to the inner lineage[1] among the Gold Coast Tallensi.

The depth of a matrilineage within a village is seldom more than five or six generations from the founding ancestress to the new-born children. The name of the founding ancestress is remembered and the descent of each member of the matrilineage can easily be recounted. The ancestress is known as the *likolo* or *lipata*, words which also refer to the trunk of a tree. We have seen how at a headman's installation ceremony the image of a tree was invoked in describing the lineage.[2] We find it once again here, where the founding ancestress is seen as the stem or root from which all members of the lineage have sprung, and the various sections of the matrilineage are seen as the branches (*ayambi*). This symbol of the lineage appears also during offerings to the ancestress. The chief, or headman, in

[1] See Fortes, M., *Dynamics of Clanship among the Tallensi*, Oxford University Press (London, 1945), and *The Web of Kinship among the Tallensi*, Oxford University Press (London, 1948). The Yao system of lineages is not the closely organized type of structure characteristic of the Tallensi. I borrow, therefore, to use Fortes's terms, and use matrilineage for the localized unit which is usually a component of a village.

[2] See Chap. V, p. 119.

2: Mitchell E-5 (1946-1949) 1956 FT7 Yao FT7

621 making the oblation, pours the beer or sprinkles the flour at the
613 root (*lipate*) of a shrine-tree. As would be consistent with this
769 way of looking at the lineage, genealogically-distant ancestors are said to be 'below' (*pasi*), so that if a Yao wishes to say that a certain person was a matrilineal ancestor many generations back, he would say that he was 'very much below'.

The Concept of 'The Mother'

613 The matrilineal descendants of the founder look upon them-
562 selves as having been fed from the same breast and may express
845 this by saying 'we are of one breast'.[1] Deep sentiment is attached to the idea of the mother among the Yao. There is, for example, a sharp distinction drawn between those women who have had children and those who have not. When a woman becomes pregnant for the first time, she is given instruction in child welfare when she undergoes a special ceremony (*litiwo*). This is a ceremony which is publicly announced and attended by most of her matrilineal and other kinswomen and acquaintances. No woman may attend this ceremony if she has not herself had a baby. Thus her change in status in the community is clearly shown by the public recognition of her condition, and the fact that she is initiated into secrets which are shared by other mothers only. Her position in the lineage is much enhanced when she becomes a mother. It is the most important step towards becoming a village founder herself.

562 The concept of 'the mother', in general, also appears in the
601 boys' initiation ceremonies. Certain phases of ceremonies may be conducted only with the help of the women. They have to
821 clap the rhythm to which the 'tailmen'[2] do their dances. Here all women are classified as 'mothers' and without their co-operation the ceremonies could not be conducted. During the same ceremonies these women appear with baskets of food on their heads. The tailmen remove the baskets and sacrifice the

[1] *Tidi pilinde pamo.* The word *ndango*, a doorway, is also commonly used. The idea in essence is exactly the same. It is the concept of the children who come to settle around a woman's hut door. It is used in *ilunda pandango pa*, the people of his lineage section.

[2] *The ni'nchiro.* These are the functionaries in the initiation ceremonies. They carry medicated sticks with them during these ceremonies, and this gives them their name. See especially Swanson, 'The Ways of Nyanjaland', *ccp* 8.

2: Mitchell E-5 (1946-1949) 1956 FT7 Yao FT7

contents. Here once again the women, though they may have no boys in the initiation ceremony, are called 'the mothers'. The ritual co-operation of the mothers in the initiation ceremonies is paralleled by that of mothers and sons in political affairs: here sons are in charge of the villages, while their mothers and sisters form the nucleus of the localized kinship group, which in turn is the core of the village. 562 601 881

The ritual importance of the mother is nowhere more clearly seen than in the curse. The Yao believe that a mother may curse her child if he or she is disobedient or otherwise beyond control. Not many mothers do curse their children; the threat to curse seems to be more often used. Informants have told me of some mothers who have cursed their children, and the procedure and the wording of the curse have always been very similar. It is usually not applied to young children who could be punished by other means, but to adults and particularly adolescents. Usually the mother lifts her breast and points the nipple upwards saying, 'If you have never sucked from this breast nothing dreadful will happen to you.' The consequences of this are greatly feared. Where I have been told of curses, each time the child has either died suddenly shortly after the curse, or at least it has gone mad. The curse is vaguely supposed to operate through the ancestor spirits, but I could get no clear statement on how this happens.[1] Whatever the cause, however, the symbolic action of lifting the breast and the dire effects which are supposed to follow from this, indicate the importance of the mother in the lineage. 562 861 789 [169]

The Yao attach this sentiment, in general, not only to the mother, but also to all senior matrilineal female relatives. In general speech all female members of the matrilineage in ascending generations are 'mothers', and all members in the descending generations are 'children'. This fundamental relation of mother and child extends throughout the lineage. The Yao term *ninangolo*, used for the senior female members of the matrilineage, embodies this idea of 'the mothers'. More specifically, as far as men are concerned, the matrilineage is classified into 562 601

[1] Further evidence that the ancestor spirits are involved in the curse may be that madness is called *mamba*—spirits—and that it may be said of a madman that the spirits are beating him (*pakumpuza mamba*). A curse may be revoked by blowing water out of the mouth, an act which is also vaguely connected with the ancestor spirits.

2: Mitchell E-5 (1946-1949) 1956 FT7 Yao FT7

142
291

PLATE VII
A lineage elder in Ciemjele village, Malemia area.
(August 1946)

[Facing p. 136]

562 601 'sisters' and 'mothers' because alternate generations are merged in kinship terminology and in behaviour. A man's sister's daughter, for example, is called 'mother', and her daughter (his granddaughter) in turn becomes 'sister'. A woman calls her male matrilineal descendants 'children' (*mwanangw*), or 'grandchildren' (*yinkulu*); her matrilineal male progenitors 'mother's brother' (*akwelume*), or 'brother' (*alumbwangu*).[1] By extension, therefore, another way of expressing common matrilineal descent is to say that two people are the children of one person, *shanakajuma*, even though that person may be their great-grandmother. A term which is almost synonymous with this is *mucitumbu cimo*, 'in one womb', used as 'we were conceived in one womb', though once again the reference may be to a common grandmother. But the inclusiveness of these terms varies in different contexts. Any may refer to the matrilineage of maximal span within the village, or to a section of the matrilineage seen as a segmented organization of parts. It is only by reference to the particular ancestress that the range of the term may be determined.

The Unity of the Matrilineage

613 A person identifies himself most closely with the members of his matrilineage from whom he expects most help and whom he, in turn, is expected to help. If he is called upon to pay a heavy fine it will be the members of his own matrilineage who will club together to find sufficient money. They, more than others, [753] support him in his quarrels. They come to his aid when he is ill or injured, by consulting the diviner and trying to find the sorcerer who is causing his illness, and by finding medicines which will bring him back to good health. They send him money if he has left the country and needs it to return. The goods he brings home from the labour centres will be shared mostly [754] among his matrilineal relatives. They will find the food to be used at his funeral and also see that his burial is properly carried [758] out. He owes these duties in turn to them. His property will stay almost entirely within the matrilineage after his death.

613 763 Relationship, unless qualified, is looked upon as being entirely matrilineal. This is well illustrated by the beliefs about the

[1] The more commonly addresses them as *ninwanu*. See p. 143.

2: Mitchell E-5 (1946-1949) 1956 FT7 Yao FT7

disease *ndaba*.[1] This disease, as we have seen, affects the sexually inactive when they are brought into contact with those who are sexually active. But the disease will only affect the members of the matrilineage of the errant person. For example, suppose a labour migrant is coming home from Southern Rhodesia and has, among other things, a few pounds of salt in his baggage for a gift to his relatives. Suppose also that while he is returning he has promiscuous intercourse. The salt becomes charged with sexual heat and if he gives it to any of his matrilineal relatives to cook with, they will contract this disease. He must therefore give the salt to members of another matrilineage, even if they live in the same village. 613 753

It is when the unity of the matrilineage is threatened, by either death or division, that its mystical value appears most clearly. When a member of the matrilineage dies the whole matrilineage is thrown into mourning and remains continent for three days. On the fourth day they perform a ritual purification and some members resume sexual relations, but the closest matrilineal relatives, such as the mother and uterine siblings, remain continent for the remainder of the mourning period, which is about 36 days. 613 765 834

It is tension within the lineage which is most closely attended by dire results. The most important reflex of this tension is accusations of sorcery. Good relationships among members of a matrilineage are adjured, mainly because friction opens the way to sorcerers. The Yao believe that sorcerers kill their matrilineal relatives so that they may share the flesh with other sorcerers. The sorcerer is fundamentally a wicked person and may kill any relative but is more likely to kill those whom he hates. Hence it is most important that relationships are kept amicable within a matrilineage for fear that sorcery ensues. 613 626 754

An interesting variation of the dangers of sorcery is the belief that sorcerers take the opportunity of squabbles within a matrilineage to kill one of the members. The rationale behind this is that the diviner's instruments are unable to detect the origin of the sorcery beyond the immediate cause. A diviner will indicate that the cause of death of, say, a child is sorcery, but that the witch is concealed behind the quarrelling words of some relative. Consequently, danger to a matrilineage ensues when one of its 613 754 578 626

[1] See Chap. V, p. 112.

2: Mitchell E-5 (1946-1949) 1956 FT7 Yao FT7

613 members goes to an outsider and grumbles to him about the
754 family squabbles[1] and quarrels. The outsider then takes the
578 opportunity of using this squabble to introduce his sorcery into
626 the lineage. The Yao greatly fear backbiting because of their dread of sorcery and none dreads it more than a village headman, a warden of a sorority-group,[2] or a person in the position of having to keep a matrilineage or section together. These people are continually adjuring the women under them—for it is the women who are believed to be the main culprits—not to fight among themselves; and if they do, not to take their complaints to an outsider but to the senior member of the matrilineage. The significance of this in relation to lineage unity is plain enough.

613 Apart from sorcery, strained relationships between members of
678 a matrilineage are believed to be dangerous for other reasons.
843 Malice may adversely affect people who are in mystically danger-
224 ous states. The most common of these states is pregnancy. If a woman has a quarrel with a matrilineage member while she is pregnant she is likely to have a difficult labour. The Yao say 'the womb has heard these bad words'. Another situation where malice or quarrelling will cause difficulties is in hunting. The luck of the chase is capricious and malice may easily bring bad fortune to an otherwise good hunter. For example, a successful hunter once gave each of his two sisters a piece of venison. Each complained that the other had been given the larger piece and quarrelled vehemently about it for weeks. The hunter now found that no game fell into his traps. He went to a diviner who indicated the quarrel of the sisters as the cause of his failure and told the hunter to get them to 'blow water' (*kupenye*). He did this; good relationships were restored and his traps were filled once more.

These deleterious effects, like the curse, are connected in some
613 way with the ancestor spirits. This is sometimes expressed quite
678 clearly when a person is called upon to 'blow water'. A
769 mother who wishes to revoke a curse, a woman who wishes to
755 recant her malice towards her matrilineal relative who is suffering in childbirth, or a man whose sister's son is ill supposedly because

[1] This is called *mimi*, which I have translated as 'backbiting'. This idea is extremely important, as we shall see later.

[2] i.e. those men who are responsible for their sisters and their descendants. See p. 143 ff.

2: Mitchell E-5 (1946-1949) 1956 FT7 Yao FT7

of his malice towards him, might equally be called upon to do this. The person makes a statement to the effect that he bears no malice and hopes that the sufferer will be well. For example, a woman in Cikoja village who was called upon to 'blow water' during the labour pains of her mother's younger sister's daughter's daughter,[1] because they had quarrelled over a sifting basket, put some water in her mouth, spat it out and said: 'Those words I spoke: the basket is mine. This is my child. Both are mine. When I spoke and asked my child about it, they were not words to place in my heart, so that to-day we should have to go to the diviner because my child is hitched[2] and be accused because of the sifting basket. These words I push aside. I do not know whether there are other words that we fought about, but if they are these, my daughter's child come out!'[3] Sometimes the ancestors are specifically invoked, '*Conde, conde tiamasoka . . .*' 'Please, please, O spirits . . .' This is a public confession of the tension within the lineage and it allows the lineage leaders to attempt to straighten out the difficulties, as they did in this case.[4]

These beliefs in mystical dangers of one sort or another which beset the matrilineage as the result of bad feelings within it, have the effect of constraining matrilineage members to maintain peaceable relations among themselves and are, therefore, conducive to maximum solidarity.

It is clear from MacDonald's writings that in earlier times the periodic offerings to the spirits of the ancestors was a valuable way in which the solidarity of the matrilineage was expressed. With the introduction of Islam and Christianity these sacrifices have disappeared. I have not worked in Christian areas long enough to be able to say whether the ancestor cult still persists. In the southern area, however, I can say that the ancestor cult survives as part of the practice of Islam. Periodically, feasts are held in

[1] See the history of the division in Cikoja lineage, pp. 165-6.

[2] *Kukukhuwa*, i.e. the child cannot be born.

[3] *Uwe nukulingale ciule cile ungwe. Aje mwamunyo. Youpe pungwe. Pinnamunyo ulimunyo, hambuyo mwamunyo, upiniwe nukulie gukuliko hanima, gati ungulu lile ulikwende hwimunyo cukulikwe mwamunyo ulikumbunulu uwe lipungo lye ciule. Cikoja upiniwulu. Kwulini ungupulli gati gituwe hanguulli nunulu mungungo nukulie gukuwe, ciukulu ungu cikoyuwe.*

[4] I have drawn attention to the cathartic effect of accusations of sorcery and public confession of guilt in a paper, 'A Note on the African Conception of Causality', *The Nigerian Journal*, v, 2 (July 1955), 57-8.

2: Mitchell E-5 (1946-1949) 1956 FT7 Yao FT7

361
342

(a) Women of a matrilineage preparing cassava together. A scene in a village in Malemia's area.
(*September 1949*)

342
343

(b) A hut in Ali Kamuka's village (Br. Ntowa's hut, i.e. hut number 3 in the diagram in Appendix B). In the foreground are grinders.
(*September 1949*)

PLATE VIII

[Facing p. 140]

2: Mitchell E-5 (1946-1949) 1956 FT7 Yao FT7

613 memory of the ancestors. These are called *sadaka*[1] and are
769 similar to those held at the end of the mourning period. They
178 are usually held when one of the lineage members has had a dream about an ancestor. The senior members are told of this and interpret it to mean that a feast in his memory should be held. The women cook a meal of mush and relish and on an appointed day the members of the matrilineage who live within a reasonable distance gather at the village of the senior section and share the feast. During this feast Islamic texts are chanted in Arabic. It is clear that in this situation the context of the meeting is exactly the same as that of the old offerings made by the lineage leader at the shrine-tree. The common ancestor is recalled and the matrilineage by meeting reaffirms its solidarity.

The Localized Matrilineage

613 The matrilineage may itself be localized in the form of a
621 hamlet or small village, as in Ali Kasunka village. It has 9 huts situated about half a mile from Chiwalo's court house in Kawinga's area. The genealogy, hut plan and census are set out in Appendix B. I summarize the genealogy here to show how the hut owners in the village are related. The village is about 300 yards across and about a quarter of a mile from the main road.

Ali Kasunka (C6),[2] the warden of the village, formerly lived in a village known by his mother's brother's name Msilo (B1). Ali Kasunka is the son of the chieftain Mposa in Kawinga's area. The village of Msilo still exists in Mposa area. Ali Kasunka and his sisters moved out of Msilo village and established a hamlet in Malemia's area near Zomba township. While they were there Ali Kasunka went to work as a domestic servant in Zomba. One day the sister of the cook in the household in which he was
[695] working came down to visit her brother. She became Ali Kasunka's second wife (he was already married to a woman from Malemia area) and lived with him in Zomba. She was the daughter of the present chief Chiwalo, and was living at her

[1] Sanderson says that this is derived from the Arabic word *sadaqa* which means 'alms'. Sanderson, M., on 'Ceremonial Purification among the Wayao, Nyasaland', *Man*, xxii, 55 (June 1922), 91–3.

[2] The reference number is to assist the reader to identify the person on the genealogy in Appendix B.

2: Mitchell E-5 (1946-1949) 1956 FT7 Yao FT7

village of birth in Chiwalo's before going to Zomba. After six years, when the land round Ali Kasunka's village in Malemia's had become exhausted, he decided to move the hamlet to Chiwalo's and selected a site about a mile from the hut of his second wife. This is where the village has been since 1940.

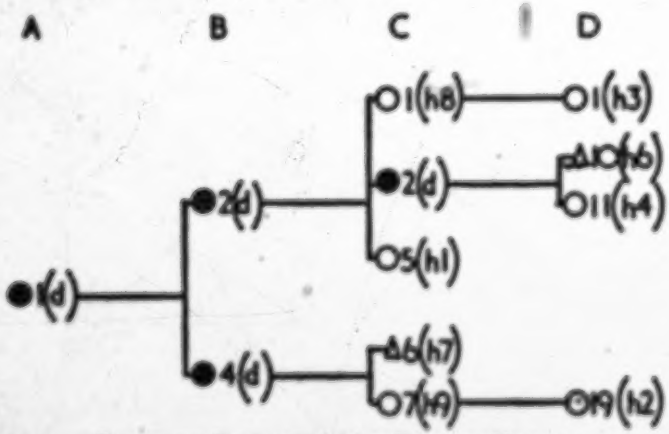

Reference Genealogy. Ali Kasunka Village.

Considering the matrilineage in detail: although Ali Kasunka's mother's mother is known, her collaterals are not, and Ali Kasunka's mother's mother's only sibling was her brother Kasembe. This genealogy is, therefore, built up from Ali Kasunka's mother's mother (A1). She had three daughters. One (B6) died before she had any children. Nyangu (B2), one of her other daughters, has two surviving daughters, Mbalaryso (C1) and Biti Kasembe (C5). Nyangu's other daughters, Amaliama (C2), Amwikonde (C3), and Amasingati (C4), all died when the village was at its present site. Amasingati died before she had any children.

Mbalaryso's (C1) daughter, Biti Mtuwa (D1), is in the village. Nalolape (D2) accompanied her husband to Cholo, where he went to work in 1947. Yahaya (D3), Ajida (D4), and Arwabi (D5) have all married uxorilocally. Taimu (D6) is unmarried and is away working for an Indian transport driver in Zomba, and Idi (D7) is working for a local Indian storekeeper as a domestic servant. Loui (D8), a girl of about 8 years, sleeps in her mother's hut.

2: Mitchell E-5 (1946-1949) 1956 FT7 Yao FT7

613 621 Amaliama (C2) had five children before she died. The eldest Golosi (D9) is dead but he had married out before he died. The second, Mwanace (D10) has married virilocally and occupies hut 6. He has no children. Nyangu II (D11) has taken the name of her mother's mother (B2). She has gone to her husband's village with her five children, because he succeeded to a village headmanship in Mposa's area. Alieje (D12) is in the village and has three children, Kasonga (E9), Undeje (E10), and Amale (E11). All of them have not yet reached puberty and they sleep in their mother's hut.

Before she died Amwikonde (C3) had only one son, Mboga (D14), who is now about 5 years old and is cared for by his mother's elder sister, Mbalanyao (C1), in whose hut he sleeps.

Amasingati (C4) died before she had children.

Biti Kasembe (C5) is still living in the village (hut 1). She had only one daughter, Biti Sale (D15), who is in the village and who in turn had two sons, Taibu (E12), who died in infancy, and Rajabu (E13), who is an infant.

The other main section of the hamlet is made up of the descendants of Nyangu's sister Abeda (B4), who had six children. Ali Kasunka (C6), who is the warden of the village, is married uxorilocally about half a mile away at the village of his second wife. His first wife who was living virilocally has recently gone back to her village in Zomba to look after the children of her late elder sister. Ali Kasunka does not expect her to return. He had three children by her. They were Biliate (D16), who is married out, and two children who died in infancy. His children by his second wife live with her in her village. Ali Kasunka's sister Atawile (C7) had in all fourteen children of whom only Biti Mtemula (D19) survived infancy. She is living in the village (hut 2) and has had two children of whom only Wilson (E14), now aged 7, has survived.

Ali Kasunka's other surviving sister, Aasanyeje (C8), with her 7-year-old child Mboga (D33), has gone to Zomba with her husband who is working there. Twalieje (C9) died before the village moved into this area and before she had children. Twalilemwapi (C10) also died before she had children. Andondonyeje (C11) died while living virilocally and her two sons married near her husband's village and have never lived in Ali Kasunka's village.

2: Mitchell E-5 (1946-1949) 1956 FT7 Yao FT7

Table XXV sets out the disposition of the adult survivors of this matrilineage. 613 621

TABLE XXV

RELATIONSHIP OF ADULT SURVIVORS: ALI KASUMKA VILLAGE

Relationship to Founder	In Village	Married out	Labour Migrants	Total
D	—	—	—	—
S	—	—	—	—
DD	3	—	1	4
DS	1	—	—	1
DDD	4	1	1	6
DDS	1	4	2	7
Females	7	1	2	10
Males	2	4	2	8

In this hamlet Ali Kasumka is both village headman and the senior male member of the matrilineage. He brought the village into Chiwalo's area and he had the responsibility for the welfare of its members. He has to arbitrate in the disputes that arise within the village and he must at least appear at arbitrations where the members of his village have come into conflict with outsiders. 613 621 622

THE CONFLICT OF MALE AUTHORITY AND UXORILOCALITY

Although descent is matrilineal, authority still rests with the men. The senior man by generation and age is the leader of the matrilineage. It is true that there are a number of small hamlets under women. Bini Nkula village is one, Bini Cimeta is another. But even for these villages there is usually a man who can be called in to handle the affairs of the village. He may be a classificatory brother of the village headwoman, or he may be her own son if he is old enough. For example, in Bini Nkula's village, it is her own son Adam who goes to the divinations and finds the necessary medicine when people fall ill. He also attends the court cases involving a member of the village. Adam is married to a woman in Ndiwagani's village about three-quarters of a mile away from his home and he is therefore easily 562 591 613

2: Mitchell E-5 (1946-1949) 1956 FT7 Yao FT7

562 available when needed. When he became a labour migrant in
1945, his younger uterine brother Lipepeje took over the responsi-
591 bilities. He is married in Ali Kasunka's village, which is about
613 a mile from Biti Nkula's. In Biti Cimeta's village the minor disputes are settled by the headwoman herself. Her younger sister's son is married in a village ten miles away, and he would take over the duties if he could. He is married to his sister's husband's sister, and his sister's husband has threatened if he should try to take his wife home he will in turn take his wife to his home. Rather than stand the loss of a member from his matrilineal village he prefers to remain married uxorilocally. When more serious disputes occur he comes to Biti Cimeta's to settle them.

The principle of uxorilocal marriage is thus in conflict with the principle of male leadership of the lineage. If a man is living too far away he cannot attend to his numerous duties. The conflict can be solved in one of three ways. The first is that the man may marry in a village which is close at hand, and most marriages do take place between people who live near each other.[1] Second, he may marry a cross-cousin who is living in the village, albeit in another section of it. He need not then move out. Third, he may bring his wife into his village. The last two alternatives are from his point of view the best. He is then living with his matrilineal relatives, and among the group in which he has clearly defined rights and unequivocal status. But his wife's brothers will resist his attempts to take his wife from her village, especially if she is still capable of bearing children. He has to persuade her brothers to let her go with him and if they refuse, or if the woman herself refuses to go, he is helpless. If he wishes to live virilocally now his only course is to divorce the woman and marry a woman who will live virilocally with him. If he does bring his wife to his village she is kept there by only loose ties of marriage, and on the slightest pretext her male relatives will take her back to her village or she herself will run away home.

562 The larger the group of relatives to be looked after, the more
591 urgent is the need for the senior matrilineal male to live with his
613 lineage. All the villages headed by females are small. Table

[1] 75 per cent of marriages are contracted by people who live within 10 miles
621 of each other. See *Marriage among the Matrilineal Yao.*

2: Mitchell E-5 (1946-1949) 1956 FT7 Yao FT7

XXVI sets out the position of a casual sample of 36 villages in Chiwalo and Nyambi areas. Among the 23 villages which had

TABLE XXVI

SIZE OF VILLAGES UNDER HEADWOMEN AND HEADMEN

Type of Village	Under 10 Huts	Over 10 Huts	Total
No matrilineage male resident .	13	2	15
Matrilineage male resident . .	10	11	21
Total	23	13	36

less than 10 huts each, 13 or 56·6 per cent had no male matrilineage members living in them. Among the 13 villages which had more than 10 huts, only two or 15·4 per cent had no matrilineage male members living in them.[1] The largest village in which there was no matrilineal male had only 11 huts. When the size of the village increases, the senior male matrilineage member tends to move in to live with his wards.

THE SORORITY-GROUP (*nkumbu*)

But as the village grows and the duties of a senior matrilineage male become more onerous, a form of organization appears within the lineage which lessens his burden. This takes the form of the differentiation of sibling groups, and is part of the normal process of segmentation which is inherent in any lineage system. Consistent with the Yao idea that men should take care of the affairs of the lineage, sisters look to their eldest brother when they are in trouble. This group of sisters in the care of their brother is called *nkumbu*. In the plural *acumbumbu* the word refers to women in general, but in the singular it refers to a particular group of women in the way I have explained. The word is always used in the sense of '10-and-20's *nkumbu*', as *nkumbu ja Cobbwele*. The central concept here is the brother-sister link and I have accordingly translated the word *nkumbu* as sorority-group.

The man who is in charge of the women, usually their eldest

[1] Diff. of per cent = 42·1; S.E. of diff. = 17·1; C.R. = 2·4; p = 0·016.

2: Mitchell E-5 (1946-1949) 1956 FT7 Yao FT7

[513] brother, is called *anyaw nkumbu*, or 'the warden of the sorority-group'. As one would expect among a matrilineal people, the link between a man and his mother and sisters is strong. But it is the link with his sister that is strongest. She relies on him for protection, particularly when she becomes ill, but also in her [582] relationships with her husband. Her brother will be her junior marriage sorority, and he will give the consent which will allow a man to marry her. Also a woman's brother will have to consult the diviner and find the medicines when she or her children [731] sicken. In times of distress, as, for example, if her crops have failed, she will appeal to her brother for help. Similarly the man is dependent on his sister in a number of subtle ways. He can always rely on her for hospitality, and is able to get a meal from her if he needs it. But his dependence on his sisters for prestige is much more important. The significance of this will emerge when we see the *nkumbu* organization in the light of the segmentation and fusion of the lineage. A man can only found a new village if he has the full support of his sisters. A sister also plays a most important role at the birth of his children. She represents him both at the first foetal-quickening ceremony and at the birth of his child, when she listens to the birth-pang confessions of his wife.[1]

At the same time the relations of sister and brother are restricted by custom. A man must never appear too familiar with his sister, especially in sexual matters. He may not, for example, [513] sleep in the same hut as she does; if she is away and he sleeps in her empty hut he must not make his bed in the place where she usually sleeps. He may not even sit on her sleeping mat. [813] Authentic cases of incest with a sister are extremely rare, whereas I recorded three or four cases of father-daughter incest while I was in the field. Supposed cases of brother-sister incest are [764] recounted and discussed widely. This is understandable because a man who is suspiciously familiar with his sister is suspected of being a sorcerer, since it is widely believed that a sorcerer usually obtains the power that he needs for the performance of his dire deeds by sleeping with his sister. The riddle of the initiands—'What is the sweetest fruit which may not be tasted?' Answer, 'Your sister'—neatly reflects the attitude of the Yao.

The close link of brother and sister is also reflected in the

[1] The significance of this is explained in Chap. VII, p. 183.

2: Mitchell E-5 (1946-1949) 1956 FT7 Yao FT7

The class [illegible] of [illegible] is [illegible] in the
kinship terminology. The common term used by both men and 943
women to address sisters is *ceowali* and it is also applied to all 601
women out of respect. But the term which is used descriptively and sometimes in address, cross-sexually, is *shadawanga* (my sibling-of-opposite sex). It is self-reciprocal and thereby expresses the special relationship between the man and his sisters. Two sisters address each other in everyday conversation as *ceowali*. When it is necessary to be more specific an elder addresses the younger as *shadawanga*. These are also descriptive terms. A man addresses his younger brothers as *spowanga* while they address him as *aciwawni*. Women also address their elder or younger brothers as *aciwawni*. This word is widely used as an honorific title but it is especially used for people who are in authority. The chief, for example, may be referred to as the *aciwawni*, and men frequently call their mother's brothers and other senior matrilineal male relatives by this term. An elder brother has the same duties towards his younger brothers as to his sisters, so that use of the term of address *aciwawni* here indicates his position of authority over them.

From the point of view of a warden, his sorority-group is 613
essentially made up of his sisters. We have seen that he is 942
responsible for his younger brothers in exactly the same way as 943
he is for his sisters, though technically they are not his sorority-
group. He also has control over his sister's children so that 604
ideally a warden sees his sorority-group as his sisters and their daughters and their daughter's daughters and so on. But a man's sister's daughters will probably have as their warden their own brother who stands in the same relationship to them as their mother's brother stands to their mother. The matrilineage is therefore organized internally in a system of inclusive sorority-groups extending from the eldest surviving member down to the youngest. However, a component sorority-group of a matrilineage does not begin to appear as a corporate group until the man who is to be its leader is old enough to take charge of the affairs of the women under him. Naturally, the age at which this happens is largely a matter of circumstance. Theoretically a man may not take charge until he has been initiated. But Yao boys nowadays are usually initiated at about 8 to 10 years of age. Obviously a child of this age cannot take over the affairs of his adult sisters, so that his mother's brother looks after

them until he grows up. It is only when the boy becomes adolescent that he begins to take an active part in these affairs. This may begin in a small way. He may, for example, accompany his mother's brother when he goes to consult a diviner. Or he

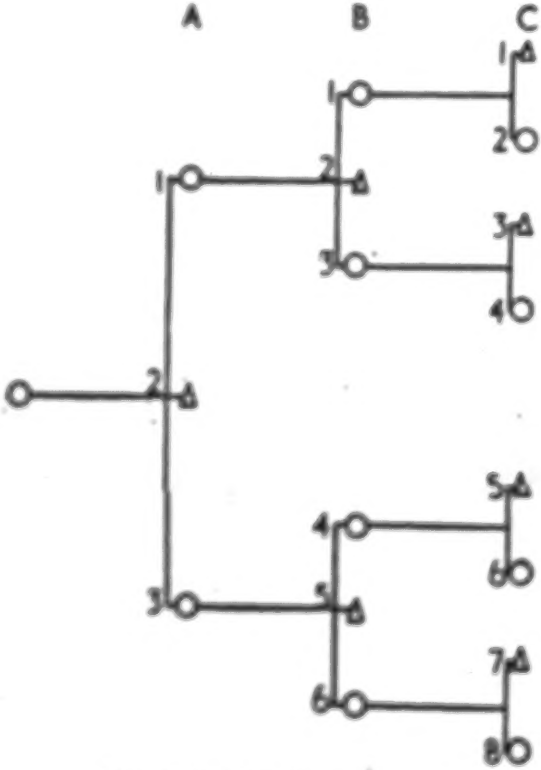

DIAGRAM 3. THE SORCERY-GROUP.

As seen his sorcery-group as being composed of A_2 and A_3 and by extension their children.

B_2 sees his sorcery-group as B_1 and B_3 and by extension their children.

B_3 sees his sorcery-group as B_2 and B_4 and by extension their children.

may be given the charge of the conjugal affairs of one of his newly-married sisters. Gradually he assumes more and more responsibility. His mother's brother on the other hand falls more and more into the background and becomes rather a consultant than an active participant.

2: Mitchell E-5 (1946-1949) 1956 FT7 Yao FT7

It is difficult to over-emphasize the importance of the sorority-group in everyday life. There is hardly a social situation in which the relationships of a man to his dependent female matrilineal kin are not involved. Probably marriage is the most frequent context in which his duties to and responsibilities for his sorority-group emerge. When a man wishes to marry a woman, he must get the consent of her brother. Ideally, it is a woman's brother who gives the consent, and if one asks a Yao how he gets married to any particular woman he will answer immediately, 'You go to ask her brother.' When consent has been obtained the woman's brother seeks out the man's brother and formally meets him, thereby setting the public seal on the relationships between the man and the woman. This gives the husband particular rights over his wife and her activities. After this, the difficulties of any of the marriage partners are the concern of the two sponsoring relatives (*acinamangenw*) whom I have called 'marriage sureties'. They meet to discuss the illnesses of either of the marriage partners or their children and try to settle the differences that arise in the married life of their wards. They must be consulted before the marriage can end, and in fact they perform the act that ends the marriage, i.e. one pays a nominal sum of say 2*s.* to the other.

According to the Yao, women are quite helpless in their relationships with others, in illness or in any court cases, and must always have a man to look after them. They are seen to be as dependent on him as children are upon their parents. A statement made to me by old Naliwa, a man who has been looking after a sorority-group for years, reflects this attitude of the men towards the women in their care.

These dependent women (*mbumbe*) are as annoying as children to look after. They are *mind*[1] indeed. If a child is ill they go to tell their brother who says, 'Very well, I shall come to see the child.' If he is not very quick to do it they are likely to be backbiting. If he finds the child very ill he goes to tell the marriage sureties of its father, and they go to a diviner to look for medicine for the sick child. Then the sisters say that he is a good man because he gets on with the job when a person is ill.

Soon the child's mother becomes ill. Someone goes to tell her brother who says that he will come to see her. He visits her husband's

[1] Backbiting. See Chap. VI, pp. 137-8.

2: Mitchell E-5 (1946-1949) 1956 FT7 Yao FT7

90 marriage merry and together they consult diviners and find medicine
578 until she recovers. Then he goes back to his village.
593 He has no sooner got back when someone comes along to tell him that the child is ill again. He says, 'I am busy, I have some work to do. Tell someone else to go to the diviner.' The messenger goes back to his sisters and they say to each other: 'He is not a good man. He refuses to go to the diviner for the child.' Another says, 'Yes, it is so. Our brother is not diligent and when he comes here he will get no food from us. He can eat food but he does not work for us. Let us ask someone else to look after us. Our younger brother is a good man indeed.' Then everyone agrees that this should be so. The one that all said was a good man before, they all now say is bad. Then the sisters go along to tell the other brother who says, 'Go and tell my elder brother.' The sisters reply that he is not a good man and say, 'We want you to look after us.' He agrees and goes to the diviner to get medicine.

The next morning a husband goes off to his village without saying goodbye.[1] The wife now goes along to tell her younger brother who says that he can do nothing about it and that she will have to tell her older brother. She returns to her village crying, and tells her sisters that she told her brother about her husband's leaving and that he refused to have anything to do with it. Then one of the sisters says, 'Yes, the older one is a good man, not like that bad young one. If this one were the older one he would have already gone to get the man back.' Others say, 'Yes, that young one is not good at all. He is a sulky one. Is he not a sorcerer? Go to the big one and tell him.'

Then the woman goes to the hut of the older brother and tells him of her difficulties. He tells her to go and fetch her husband and if he refuses to come back, to tell him. This she does and he refuses to return. She reports this to his older brother. He tells her that his younger brother will return and if he does not they will come to talk matters over. The woman goes back to her village and goes to see her older brother to tell him what she has done. He says, 'Very well, my sister, if he does not come to-day I shall go there to-morrow. Now go home and give the children some food.' When she gets back to the village she says, 'That brother is a good one indeed. He is diligent. He is going to fetch my husband back, if he does not return to-day.' If the man has not come by the next morning the woman goes to tell her brother. He goes to the husband's

[1] *Kwendeka*—to go off in a huff, to go off without saying goodbye. This is a sure sign that there is something wrong and that some action needs to be taken.

2: Mitchell E-5 (1946-1949) 1956 FT7 Yao FT7

village and seeks out his marriage society. They call him and tell him that the woman's brother has come to take him back to the village. He says that it is all right and that he will follow that evening. The brother goes back and tells his sister to cook porridge because her husband will be coming that evening, and then he goes home. The husband returns. 592 578 593

The woman now goes to tell her brother that her husband has returned and he says that he will come to visit him in the morning. Next morning her brother comes to the hut and asks her husband why he had left. 'You were cross about something and you did not come to tell me. Now tell me why you left.' The husband now tells him and they talk it over. If they fail to reach an understanding they go to tell the husband's societies and discuss the case fully. If the woman is wrong her brother reprimands her and if the man is wrong his societies reprimand him.

To live with a society-group needs courage.[1] You must not listen to backbiting. If you listen to the tales of others then you will not be able to live with your society-group because your heart has no firmness. A society-group needs a man who has no fear. Then the women listen to what he says. He will say to his sister, 'Sister, hoe your gardens well. Do not have intercourse in the bush because it will finish your children with salt.[2] You must respect your husband and not tell him lies because he will not trust you and will be frightened of you. Listen to what I tell you. Things will be peaceful in your house if you come to tell us what is going on. If you do not tell us then there will be loss of friction.' Then the people say about a man whose sisters are not very happy, 'Who is that man who is not teaching[3] his society-group well?' Then the people will mention his name and they will laugh at him. If the society-group are living happily together he is a good man and he does not listen to the backbiting. His society-group are obeying him well and he lives happily with them.

In this account one cannot but be struck by the ambivalence of the relationship of brothers and sisters. Now they hate each other and now they love each other, depending largely on the fortunes of the moment. But the tie is the strongest in Yao social structure; while the relationships between the society-group and any particular brother may vary, the relationship between brothers and sisters in general is unassailable. When 593

[1] Ndichidzibe ntima; perhaps more literally translated as 'a stone heart'.
[2] A reference to adultery. See Chap. V, p. 116.
[3] In the sense of teaching them the right way to live, or their manners.

2: Mitchell E-5 (1946-1949) 1956 F77 Yao F77

593 one brother is unavailable, they turn to another, uterine or collateral, and only if he too is unavailable do they then turn to other relatives.

The attitude of Nalwa shows very clearly, too, the dependence of the women on the man. They have to wait for his action before they can settle their difficulties. This is part of the general process of internal differentiation within the lineage. The women become organized into small groups, each under the care of a man. These are siblings, so that their common descent, well expressed by the Yao *mutimbe cimo*, 'in one womb', is the real unifying bond between them. When a Yao wants to express his close link with his uterine sister, that is to emphasize that she is not a collateral or classificatory sister, he stresses that they are from 'only one womb' (*ilimbe cimoyo*). Nalwa says that a man who controls his security-group so that they live happily together is a happy man. He is happy also because his prestige is enhanced if he is a warden of a security-group. Being a warden is the first step on the ladder which leads eventually to independent village headmanship, and the man who has a large security-group under him can achieve this aim more easily. Therefore, the warden of a large security-group has even higher prestige than a man who has only a few sisters to look after. But the aphorism that 'chieftainship is slavery'[1] achieves significance when a man acquires more dependants.

Segmentation and Fission in the Matrilineage

613 The security-group organization in the matrilineage assumes
621 most significance when viewed in its political setting. Segmentation and differentiation within the matrilineage continually leads to splits, hence to village break-ups and the birth of new villages. Fission in the matrilineage usually appears when the wardens of the younger security-groups are over the age of 30. At that age each man is adult and therefore old enough to be responsible for his own and his security-group's actions and, usually, his mother's headman, who when alive had kept their younger relatives united, are dead.

The events leading up to a split in a matrilineage usually follow

[1] From Smith and Dale, *The Ila-speaking People of Northern Rhodesia*, Macmillan (London, 1920). For its significance, see Clockman, Barnes and Mitchell, 'The Village Headman in British Central Africa', *Africa*, xxx, 3.

2: Mitchell K-5 (1946-1949) 1956 FT7 Yao FT7

[illegible] a definite pattern. Very frequently indeed an accusation of sorcery is involved.[1] This usually stimulates a dissatisfied warden to gather his dependants together and to move off to found a new village. Elsewhere I have set out in detail the typical events which precede a village break-up when the lineage splits after a man quarrels with his mother's younger sister's son.[2] These splits are not always successful because the seniority of the older relative, especially if he is a headman of some standing, may serve to reunite the village, and the leader of the dissident group may be unable to maintain its independence. This is what happened in Mwambajila village.

Mwambajila is one of the more important village headmen in Jalasi's area. The tension between him and his mother's younger sister's son Mfwana Soma reached a climax after a series of deaths among Mfwana Soma's children. He consulted a diviner and found that Mwambajila was the sorcerer causing these deaths. Mfwana Soma was very angry at this and told his sisters that they ought to leave the village and go to live in Liwanda's area, i.e. about 15 miles away. Eventually he persuaded them to move and they went to live on the Mzungu river banks. But the deaths continued. The women now started to be worried because they had left Mwambajila's village

[1] The implication of this cannot be understood without some knowledge of Yao divining procedure. The type of divining is usually by gourd and objects (*ukuba*). The diviner first of all establishes the reason for the visit, i.e. death, illness, theft, or whatever it is. He then consults his gourd and throws into his hand a variety of symbolic objects. He holds a story round these objects, and finally pronounces that he sees some person whom he vaguely defines. The consultee is then asked to mention who this could be. Though sorcery is supposed to be practised mainly in order to get human flesh for ghoulish feasts, it is not believed to act haphazard. In other words, a sorcerer is supposed to select his victims for revenge as well as for meat. The selective processes at work, therefore, when the consultee seeks to reconcile the diviner's findings with his own suspicions, are that he should select someone who is obviously evil, i.e. from his point of view, one with whom he has been quarrelling, and he should appreciate the possible motivation for sorcery. After he has made the selection the name is noted by the diviner and the consultee may have someone a chicken to the person called so see the diviner's findings.

This, of course, confirms Evans-Pritchard's analysis of Azande witchcraft and I have acknowledge my debt to him for stimulus both from his book and from the discussions we have had on the topic. I assume his analysis in my discussion. See Evans-Pritchard, E. E., *Witchcraft, Oracles and Magic among the Azande*, Clarendon Press (Oxford, 1937).

[2] *In Some Tribes*. Case History II, pp.

as he was supposed to be the sorcerer. Suspicion fell on Mlewana Sonza and eventually one of his sisters went back to Mwambajila and complained to him. Later the sisters consulted a diviner and found, as they suspected, that Mlewana Sonza was the sorcerer. Thereupon, they returned to Mwambajila and left Mlewana Sonza living alone with his wife.

Here is an example of a village which did not manage to maintain its identity but returned to be re-integrated into its village of origin.

Conflicts between collateral brothers are not frequent. This is for two reasons. Firstly, the opposition between lineage segments is usually expressed in a conflict between a man and his mother's brother, a fact which is no doubt related to the opposition of proximate generations. Secondly, lineages seldom persist long enough to contain within them several segments in which collateral brothers are leaders.

Conflicts seem to occur more frequently among uterine brothers, a fact which is significant in the light of the particularly strong bonds which unite them. The relationship between uterine brothers is much the same as that between sisters.[1] They are intimately linked by their bond of kinship and depend on one another for care and support. Usually the elder brother has his younger brothers in his care, in the same way that he has his sisters.

But at the same time they compete for the control of the security-group. A man, we have seen, can seek prestige in the indigenous political system only by becoming a village headman. He can become a village headman only by mustering his sisters and setting up a small hamlet with them. The elder brother prevents his younger brothers from doing this because the security-group is usually under his care. The younger brother can gain control only if he can persuade his sisters that the elder is a sorcerer, or incapable, or in some way unsuitable for his position. Hence the frequent accusations of sorcery among brothers: it is a rationalization of a hostility arising from the structural position of uterine brothers, which, in view of the commonly accepted strong sentiments uniting brothers, may not be otherwise expressed.

The break-up of Mponda's village in 1940 clearly illustrates

[1] I have dealt with this more fully in my essay in *Seven Tribes*.

2: Mitchell E-5 (1946-1949) 1956 FT7 Yao FT7

how the opposition of brothers emerges in a situation where the lineage is concerned.

578
593
Gil

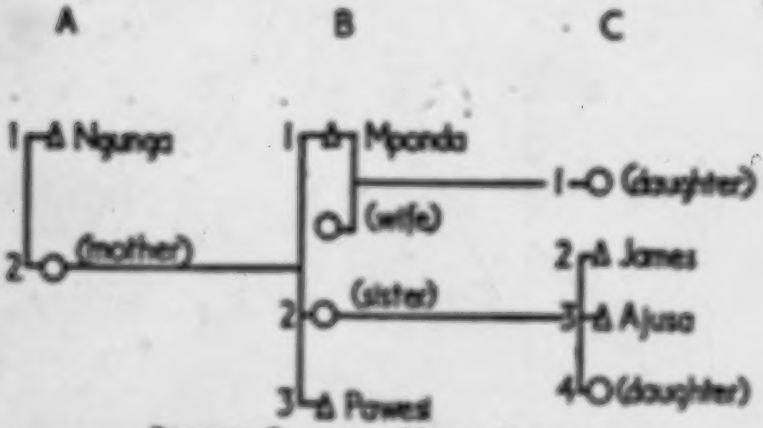

Residence Genealogy. Mponda Village.

Mponda, a village headman, was married virilocally. One day his daughter went to the pounding point in the village and found that her cross-cousin, the daughter of the headman's sister, was there. A quarrel arose between the two girls over the pounding mortar. Presently they started to fight. The wife of Mponda then came out and caught hold of her husband's sister's daughter and beat her. Mponda's sister had gone to draw water and was just returning. She heard her daughter crying out and ran to the place to find her sister-in-law beating her. The two women had a quarrel about this and separated with bad feelings. The next morning the quarrel broke out again. In the altercation that morning the headman's sister rebuked the headman's wife for behaving in a way which did not befit her position. The headman's wife on the other hand threatened to leave the village if this went on. The bickering continued for some time and eventually the two women came to blows. The headman's sister, who got the worst of this encounter, now decided to take the matter up to the headman. When she told him about it he refused to listen to her complaint. He told her that he had brought his wife to the village and that he did not want to have her treated like a slave. Another sister now chimed in and said that Mponda ought to invite his younger brother along to help him to settle the case. Another recommended their leaving him altogether because he was willing his wife to despise his sisters. To this Mponda replied that the village was his and that his sisters were only children

2: Mitchell E-5 (1946-1949) 1956 FT7 Yao FT7

578 and that he could not understand who could be inducing them to
593 talk like this. He told them also that as far as he was concerned they
601 could report the case to whomsoever they wished. The women came out of the hut and went straight to Pwewi who was the headman's younger brother. He told them to go back and to wait a while before they took further action.

578 After four days had passed the headman's sister who had fought
593 with the headman's wife, became ill. In the morning the sisters sent
759 a message to Mpunda but he did not come. They sent another
767 message to Pwewi who came and asked if they had told Mpunda. They said that they had, but he had refused to come. Pwewi called James and Ajana, the sister's sons of the headman, and told them that he would tell the headman that they were going to find out the cause of the illness. This they did. The diviner indicated that the headman had caused the illness by sorcery, because of the fight between his wife and sisters. Pwewi tested the divination by giving a chicken some poison. It died, indicating that the divination was accurate. He took the chicken's head to Ngunga who was Mpunda's perpetual mother's brother.

When Ngunga heard this he refused to believe it. However, he agreed to send for Mpunda and to ask him about it. When he came to Mpunda denied the accusation. Ngunga now produced the chicken's head and accused Mpunda of being a liar. At that moment a child came to tell them that the woman was dead and the interview ended. They went to the funeral and the next morning they decided to have a post-mortem meeting (*mapete*) in order to decide the cause of the death. Mitumuni, one of Nyandi's perpetual sons, represented the chief. Ngunga opened the discussion by telling the meeting that the woman had been killed by the headman because of the fight between his sisters and wife. Mitumuni asked how they knew this and Ngunga told of the divination and the poison ordeal. He then asked Mpunda if he had heard what had been said and what he had to say. Mpunda replied that he knew nothing of it. Ngunga said that Mpunda was a bad man and that the others would leave him and he would have to live alone. Mitumuni told Pwewi and Ngunga that they must not leave the village. Ngunga replied that it was impossible to stay there while Mpunda was so bad. If the women stayed with him he would finish them all. Pwewi collected 30 of the 40 huts that made up the village and took them away to Chikwesi's area, a distance of about 15 miles. Those who stayed behind with Mpunda were his "children" and some unrelated people.

593 This case brings to the fore the position of the younger brother
578 as a constant challenge to his elder for the care of his sisters.

2: Mitchell E-5 (1946-1949) 1956 FT7 Yao FT7

The threat that lies over the head of an inefficient warden of a sorority-group is that of losing them to his younger brother, and it is scarcely possible to exaggerate the frequency with which this takes place in Yao society.

Intra-lineage Tension and Succession Disputes

The competition between brothers is heightened where the succession to an important name is involved. The rule of succession indicates a man's eldest sister's first-born son as the rightful heir. Informants in Jalasi's area told me that long ago the succession used to pass along the line of collateral brothers first, before dropping a generation to the sister's sons. It is true that in Jalasi's genealogy there are one or two early successions from a man to his more senior brothers, but recently the succession has passed regularly to sisters' sons. MacDonald, writing in 1880, quoted the succession rule for the Mangoche Yao to be 'from a man to his eldest surviving brother and then to the sister's son';[1] but he describes in another part of the book the dispute for Malemia's name involving the deceased chief's younger brother and his sister's son, in which the sister's son's claims prevailed over those of the younger brother.[2] Stannus, writing of the Machinga in 1922, gives the rule of succession as I found it,[3] and suggested that MacDonald's interpretation of the Malemia succession dispute in 1875, was really a mistake, and that both disputants were sisters' sons of the head chief, but of different lineage sections. I cannot decide which account is true, but there seems to be no reason why MacDonald's general rule should be incorrect, especially since so much of the other material he recorded seems to be accurate. Also, as far as I could see, there are no differences in the Mangoche and Machinga Yao in successions to-day, so that it seems likely that there has been a change from adelphic succession to a straight system of matrilineal primogeniture. One is tempted to find a reason for this in the strong emphasis on patrilineal primogeniture in Islam, which was becoming widely accepted in these areas in the middle of the nineteenth century. Unfortunately I cannot bring direct evidence to support this hypothesis.

While the succession rule may indicate someone as having the

[1] MacDonald, *Africana*, i, 180. [2] MacDonald, *Africana*, ii, 190.
[3] Stannus, 'The Wayao of Southern Nyasaland', 277.

2: Mitchell E-5 (1946-1949) 1956 FT7 Tao FT7

While the [illegible] may [illegible] to hereditary the
613 best claim to a headmanship or chieftainship, it does not ensure
622 that he will succeed. Succession to headmanship is not merely
642 a matter of assuming control over the matrilineal relatives of the
headman. It is also taking command of the whole village as an entity in a political structure and keeping it together as a functioning whole. The village as a whole, as well as the personal senior relatives, has a say in the selection of the new headman, and they select the man who is likely to be the most suitable for the position. Here, as in most affairs, the women have an important say. When they consider his role the village members discuss in particular the ability of the prospective headman to hold the village together. If he is unsuitable they may cite occasions when he is believed to have used sorcery, or sometimes they merely say that he 'has no mouth'. This means that he is incapable of settling the disputes which arise in the village and therefore is unable to keep peace within it. The attitudes of the villagers to sisters for a name are well brought out in the statements when the Mini name was considered.

There were two uterine nephews, Wali and Mbodzje, whose claims were about equal though Wali was the older. The chief Kawinga sent his representative Kawinga to call for a decision. At a general meeting he asked the villagers whom they wanted. Typically Kawinga's remarks were addressed particularly to the women. There was a division of loyalties. Some said that they wanted Mbodzje because 'he was of good heart, he gave gifts, he laughed and was not bad tempered, and he looked after the people when they were ill'. Kawinga, however, asked the opinion of the women under Mbodzje, and they were apparently dissatisfied with him and supported his opponent. Kawinga therefore announced that the new headman would be Wali. Mbodzje was dissatisfied with this decision and gathered about him his followers and went off to found a village elsewhere. But the position for Wali was an uneasy one. He lived in dread of Mbodzje's sorcery. When he was ill just before he died, he accused Mbodzje of putting poison in his beer. After he died Mbodzje brought back the women he had taken away and adopted the sister of the village headman. The people cynically accepted this, saying that he should perhaps take it because if any other should try to be headman he would not enjoy the fruits long before he too was killed. But the women were not satisfied with this arrangement and led by Cilo, the headman's sister's son, migrated. They said, 'We wonder that our chief should have died. The heart of the present chief is not good. Those who will stay with

Z: Mitchell E-5 (1966-1969) 1956 FT7 Yao FT7

him will be other people, but for us the bush does not eat a person.'[1] Mbidzje was left with a few personal adherents. My informant assured me that 'He is a most unhappy man to-day because he is forever accused of being the sorcerer who is causing the deaths of his relatives. People are saying that Mbidzje had broken the village because he wanted to be a chief when the people did not want him. The one the people wanted was killed. Nowadays, no one visits him because of his sorcery and the people are frightened of him especially at beer drinks.' 613 612 562

Inconsistency disqualifies many prospective village headmen. A headman must be a man of experience and wisdom to take charge of a village. Unfortunately I cannot present quantitative data on 622 613 541

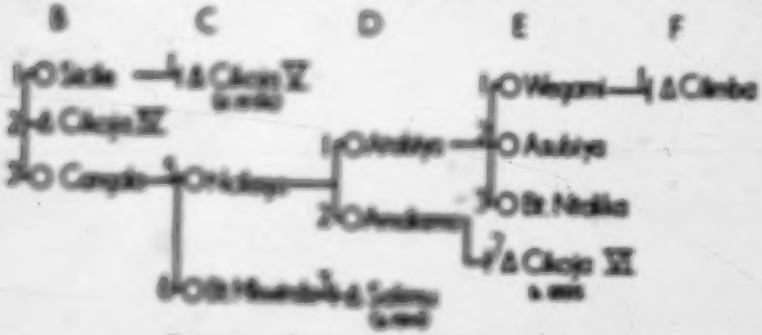

Kinship Genealogy. Cikoja Village.

the ages when village headmen succeeded to their title, but my impression is that unless a man is older than about 30 years he will not be considered for the name. Difficulty arises when there is a conflict between the principles of seniority and age. The older women do not always bear sons before their younger sisters, so that sometimes a man from a junior lineage section (*ndzidzi*) would be older than a man from the senior. If the younger, but senior, is, say, over 35 it is likely that, other things being equal, he will take the name, but if not the man from the junior house stands the better chance. This is what has happened in Cikoja village. The position is as follows. When Cikoja IV (B1) died, quite regularly the elder sister's (B2) first-born son (C1) succeeded. But many years elapsed between the birth of

[1] *Lingal Sympathy* stands. In other words, if we go to live in the bush somewhere Mbidzje will not bewitch us. Two sorcerers are supposed to eat their victims. See p. 103, fn. 1.

622 the children of Ncilaga (C5) and Bt. Mkwinda (C6). There
613 was a big difference in the ages of these two women. Ncilaga
541 died nearly 30 years ago but Bt. Mkwinda died in 1948. When Cikoja V (C1) died in 1936, Salimu II (D3), who was born in about 1914, was very much younger than the present Cikoja VI (B7), who was born about 1895. Ncilaga (C5) had no sons, nor had Atabiya (D1), her eldest daughter, so the succession passed to the only son of Amaliama (D2) who was the senior male in that generation. Salimu II, genealogically senior to the present Cikoja, is to be the next headman. He has married a 'cross-cousin' (his mother's mother's brother's daughter's daughter's daughter) and lives in the village. He has already taken over the affairs in one section of the village. The other section has moved out and built about half a mile away with the present Cikoja VI. Note that the junior house—*i.e.* the descendants of Citeleka (A2)—are completely out of the succession. Wegami's (E2) eldest son, Cilimba (F1), is living virilocally with Cikoja VI in his section of the village and is already opposed to the prospective village headman Salimu. He is likely to be the village headman after Salimu dies and may even push his claim when the present Cikoja VI dies, because Salimu has been accused of sorcery on several occasions.

622 The conflict between sister's sons and mother's brothers at
578 succession has all but fallen away. The people oppose with
604 some vigour the idea that a younger brother should succeed. Frequently the chief or headman would rather his younger brother succeed, and sometimes indicates him as his successor. Kawinga, for example, has given his pre-succession name of Mkomba to his younger brother and many say this is tantamount to announcing Mkomba as the next Kawinga. This is violently repudiated by most people I have spoken to and they indicate a sister's son as the likely successor. Jalasi too, before he died in 1941, indicated Mhawa, his mother's younger sister's son as the successor, but when it came to the point a sister's son succeeded. The weight of custom is in favour of the sister's sons and usually the succession is fought out among uterine or collateral brothers in the first descending generation.

613 A matrilineal relative is always chosen to be chief in preference
662 to any other, but sometimes there is no heir. Other things being equal an unsuitable matrilineal relative will be chosen, or a

2: Mitchell E-5 (1946-1949) 1956 FT7 Yao FT7

woman will take the position, before the name will be allowed to pass to a non-matrilineal relative. While a matrilineal relative holds it there is always the chance that a suitable matrilineal heir will be born to a woman of the matrilineage, and will be able to take over the name. In Katuli's area the principle of primogeniture is so strong, I was told that rather than let a succession pass to a junior house, a woman is appointed to 'keep the name'. This happened before the succession of the present Katuli. Nkolojele was the present Katuli's mother, and when his mother's brother died Katuli was too young to become the chief. Instead Nkolojele took the name to prevent it from going to a junior lineage and held it from 1920 to 1936. Nkolojele was thus appointed Principal Headman under the 1912 Ordinance. In 1936, she retired in favour of her son who then took the name Katuli and became chief.

The name is kept within the matrilineage if it is at all possible. The history of the succession of *Mpumbe*'s name is instructive in this context.

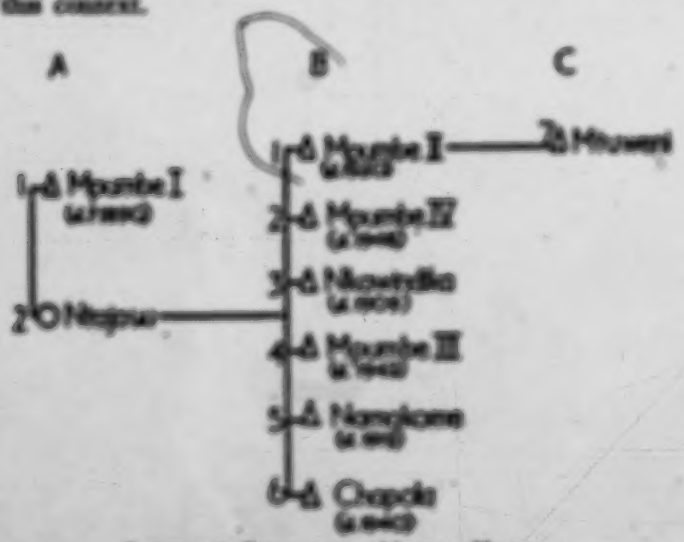

Ramifications Genealogy. Mtowera Village.

Mpumbe, it will be remembered,[1] came from Jolati's area to Kawinga's after the White attack on Jolati in Mangoche. The genealogical summary sets out the relevant data.

[1] See p. 50.

2: Mitchell E-5 (1946-1949) 1956 FT7 Yao FT7

622. Mpumbe I (A1) died in Jalasi's area before the European attack in 1896. His sister's son (B1) succeeded. When he died in 1920 three brothers survived him. He had no sisters. His immediate brother (B2) was considered unsuitable for the headmanship and it passed instead to the next surviving brother Mpumbe III (B4). When he died in 1943 the only survivor in the matrilineage was Mpumbe IV (B2), and although he was by this time a very old man and had been previously considered unsuitable, he was selected as the next headman. In 1947, when I first visited the area he was blind, almost permanently bemused with beer and quite decrepit. At the same time Mzuwesi (C7), the son of Mpumbe II by a slave wife, was about 30 years old and was the virtual village headman. All disputes were brought to him and he settled most of them. He also represented the village to the District Commissioner and at Kawinga's court house when the presence of the headman was required. Wali, Mpumbe I's fifth wife's daughter's daughter's son, assisted him. The only thing that Mzuwesi could not do was to make the sacrifices for the girls' initiation ceremony, but he took the old man to the shrine-tree and held his unsteady hand while the latter poured the flour on the ground and called on the ancestors. When Mpumbe IV died in 1948, the succession passed to a distant sister's son whom they found in Ngwengwende's village in Liwonde's area. Mzuwesi, who might have succeeded to the name, and for all intents and purposes was a village headman before the headman's death, was accused of killing the old man by sorcery so that he could press his claim to the succession. He consequently moved out with his sisters and founded a village of his own about 15 miles away.

622. When there are no heirs available one of two courses is open.
623. The first is that a patrilineally-linked relative may succeed to the name. I have heard, for example, of a chief's son who succeeded as Matola in the Makanjila dynasty. The son, of course, had the same clan-name as the chief.[1] In the Makanjila case there is some evidence that there were other heirs available and that this succession was the result of a clever piece of lobbying by the slaves with the Administration. I have on record a few villages where this has taken place, and where the name has kept to the slave lineage.

A more likely reaction to this situation is probably what would have happened in Mpumbe's village if no matrilineal relative could be found. Mzuwesi would probably have taken the

[1] Slave-children took the clan-names of their captors. See p. 70.

2: Mitchell E-5 (1946-1949) 1956 FT7 Yao FT7

village but called it Mtowesi and not Mpumbe village. The positions of the lineages in the village would have become inverted, and the patrilineally-linked lineage become the dominant lineage. In this way villages may change their name or they may acquire two names, as happened to Mlungu village in Nyambi's area. Here a man called Masala took over the control of the village. He was the son of the previous Mlungu and the village is known to-day by either of these names. The interesting point is what will happen when he dies, because there are now sisters' sons in a distant lineage old enough to take charge of the village. The rule is, as we have seen, that the matrilineal relatives always have the first claim.

Paternity and Segmentation

It is interesting to note that the paternity of brothers or sisters is not a differentiating feature in these social relationships. In the discussions which have hinged upon the care of security-groups I have never heard the paternity of brothers and sisters brought up as a reason why they should hold more or less closely together. The father is important in social life as I point out later, but while groups may be linked through paternity, it does not lead to a second principle of segmentation within the lineage.[1] This is manifestly the result of the fundamental difference in a system of matrilineal descent, where paternity is of less consequence than maternity is in a patrilineal structure. Among the Yao, unlike the matrilineal peoples of Southern and Northern Africa, no marriage payments are made; divorce is easy and frequent, and there are no disputes about the custody of children, who always belong to their mother's group whether they are legitimate or not.[2] This is consistent with the view of the husband as a mere begetter of children. Among the Yao, the

[1] This aspect of segmentation in patrilineal societies, with different views of men as points of fission, is brought out particularly in Evans-Pritchard, E. E., *The Nuer*, Oxford University Press (London, 1940), and *Marriage and the Family among the Nuer*, R.-L.I. Papers, No. 11 (1944); Fortes, M., *The Dynamics of Clanship*, and *The Web of Kinship*; Kuper, H., *A Black Aristocracy*, Oxford University Press (London, 1947).

[2] This has been worked out in Gluckman, M., 'Kinship and Marriage among the Lozi of Northern Rhodesia and the Zulu of Natal', in Radcliffe-Brown, A. R., and Forde, C. D. (eds.), *African Systems of Kinship and Marriage*, Oxford University Press for the International African Institute (London, 1950).

2: Mitchell E-5 (1946-1949) 1956 FT7 Yao FT7

613 sisters are the points of cleavage in the matrilineage and the
614 group of uterine sisters is seldom divided, unless their daughters are old enough to form a corporate group and to move off with their mother to found a new village under their brother.

The Spatial Representation of Lineage Segmentation

361 The segmentation of the matrilineage is also shown in the
613 spatial distribution of the huts in a village. The daughters of
621 the women of the matrilineage set up their huts near to their mothers', and as this continues over a number of years, the internal segmentation of the matrilineage is automatically reflected in the disposition of huts. Most Yao villages will show this spatial representation of social distance, some more clearly than others. The clearest example I have is in Moni section of Majoje village, Nyambi's area. The disposition of the huts is set out in the village plan in Appendix C. Here are five fairly distinct groups of huts in the village. Four are descendants of four uterine sisters, the children of the previous Majoje. The space between these four groups is cleared and paths criss-cross among the huts. About 200 yards away, the fifth group is out of sight of the others and must be reached by a path leading through the fields. In this cluster of huts live the children of the uterine brother of the four sisters. The matrilineal relatives of Majoje live about half a mile away in a quite distinct cluster.

In Cikoje village the same principles are at work but the situation is somewhat obscured by the number of patrilineally-linked relatives. A glance at the village plan in Appendix D shows that the major segments, denoted by the symbols Ma and Mc in the plan, are quite distinct in the old village site, the huts of Ma being separated from those of Mc by a broad path and by a patch of bamboos. In the new village site across the stream the same general segmentation is shown, where the two sections, Ma_1 and Ma_2, are separated by a path.[1] The separation of the clusters of huts is difficult to represent on a diagram because not only are the huts placed in discrete clusters, but they face in towards one another and the space between them is kept clean. Between the clusters there may be rubbish heaps and small garden patches. I describe later how the village continually

[1] I describe how this section of the village came to be across the river on p. 189.

2: Mitchell E-5 (1946-1949) 1956 FT7 Yao FT7

adjusts itself to the changes in its composition. At this point I wish only to indicate how the differentiation among the various segments of a matrilineage is reflected in the way the members site their huts in a village.

The Segmentary Process

The segmentary tendencies within the lineage are countered by unifying forces, but the cleavages between the lineage sections show up at the slightest provocation. Once the cleavage starts it widens rapidly and charges of sorcery become more and more frequent between the two sections until eventually one moves out to found a new village. A cleavage of this type has been developing in Cikuja village for the last eight years. When I left the field in 1949, talk of migration was in the air but it had not yet happened. I summarize the major events which led to the present situation.

The cleavage first manifested itself in 1942 when Bt. Mbwana (F2)[1] fought with her mother's younger 'sister' Ayesi (E8). These two were pounding at the same place in the village and Bt. Mbwana took Ayesi's flat sifting basket. She retained it for about four days without telling Ayesi that she had it. One day Ayesi saw it at the pounding point and asked Bt. Mbwana where she got it. They had a few words about it and Bt. Mbwana returned it and thought no more of it. She was pregnant at the time and was confined about a month later. It was her fifth child but she had a greatly prolonged labour. After labour had been going on for some hours, Cilimbo (F1), her elder brother, thought that there must be something wrong and sent his two younger brothers, Kassi (F3) and Gwili (F4) to a diviner. The diviner indicated that the cause of the difficult birth was that her 'younger mother' Ayesi was bewitching her mother,[2] and advised that Ayesi should blow water from her mouth and declare that she bore no malice. Kassi and Gwili returned and went to Bt. Amina (E4) who was Ayesi's elder sister and told her what the diviner had said. Bt. Amina did as she was advised and fetched Ayesi to the door of the hut in which Bt. Mbwana was lying, and made her confess. The child was born immediately. After a week Cilimbo and Kassi brought a complaint to the village headman Cikuja (E1). They accused Ayesi of trying to kill their sister. Cikuja sent a message to

[1] The reference numbers refer to the genealogy in Appendix D.

[2] Difficult labour is usually assumed to be due to adultery, but it may also be due to sorcery or malice. See p. 158, and Chap. VII, p. 185.

2: Mitchell E-5 (1946-1949) 1956 FT7 Yao FT7

(613 678 995 483) his elder uterine sister's first-born and second-born sons, Amido (Pt8) and Kanyenga (Pt9), to advise them of this dispute, and told them that they would have to assume responsibility for the actions of their mother's younger sister, Ayesi. At the same time he went to a neighbouring village to call in an unrelated man to act as arbitrator in the dispute. There was much argument and eventually the arbitrator awarded 15s. to be paid by Cikoja as leader of the junior lineage section to Cilimbo as leader of the senior section. Amido and Kanyenga found 10s. between them and gave it to Cikoja to give to Cilimbo. The other 5s. they said they would try to find and pay later.

This payment formally settled the dispute but the tension was now to the surface. Amido and Kanyenga said that there was separation in the group now that they had started to eat money. They were not wrong. Ayesi was pregnant and near to confinement. When she was confined her labour was as difficult as Bt. Mbwana's (it was also her fifth confinement). When her birthpang continues seemed to be unavailing Bt. Bwana Ia (Pt6), her elder sister's daughter, went to Kanyenga to tell him that their 'younger mother' was having a difficult childbirth. Kanyenga remarked that she had had many children before and had not suffered, so that there must be some reason for her difficulty. Then Kanyenga and his sister went to Ayesi's husband's sister's hut[1] to find a representative to go with them to a diviner. When they got there Ayesi's husband's sister told her son to accompany her brother's wife's representative to the diviner. The diviner indicated that the cause of the prolonged birth was the malice felt by Bt. Mbwana because the rest of the compensation awarded had not yet been paid. He said that the only thing to do was to call Bt. Mbwana and to get her to blow water from her mouth at the hut door where Ayesi was confined. Bt. Amina went to find Bt. Mbwana and made her do this. Immediately Ayesi delivered a stillborn child.

The next morning Amido and Kanyenga went to Cikoja and blamed him for the stillborn child.[2] Cikoja called Cilimbo to listen to the complaint. Ayesi was inconsolable. She said that she had blown water for the sake of Bt. Mbwana who to-day had a child, whereas she was mourning her child. Once again Cikoja called in outsiders to act as arbitrators and the members of the two segments gathered to settle the dispute. At the end of protracted wrangling

[1] Ayesi was married to her MMMMOI (Kanik (Pt12)), whose lineage lived in another part of the same village. Her genealogy and her course in Appendix D.

[2] Cikoja is a representative of his lineage even to the lineage members. This orientation simply means that the blame lies within the lineage.

2: Mitchell E-5 (1946-1949) 1956 FT7 Tao FT7

the arbitrators awarded 30s. compensation to be paid by Cilimbu to Cikoja, less 3s. owing. This money was to be paid to Ayesi in compensation for the loss of her baby. Ayesi, however, refused to accept the money because she said she wanted to have her baby. The matter now became an inter-segment affair and Cikoja, Amidu, Kanyonga and Kofi (F36), the son of Ayesi, with Bt. Amina had a meeting on what to do. Ayesi was quite adamant about it. There was nothing to do but to drop the matter, and the state of tension between the segments remained as it was before.

The next incident occurred in 1943. Mpokolo, the husband of Bt. Amina, had some goats. One day two of them strayed on to the verandah of Bt. Madi's hut. Bt. Madi (F12) was the daughter of Amoma (F2) and a member of the senior lineage segment. One of the goats stood in way into a basket of flour that was lying under the verandah and started to eat it. Bt. Madi came out and picked up a log that was lying nearby and threw it at the goat. It broke the goat's leg and the goat had to be destroyed. The owner, Mpokolo, who was watching at that moment immediately rebuked the woman. He went and reported the matter to Cikoja and he sent a messenger to Mpokolo's marriage society who sent back to say that they would meet at Chiwalo's hut the following morning. The arbitrator in the case finally decided that the correct action should have been to take the goat to the owner and to lay a complaint against him. As it was he had to award compensation of 30s. to be paid to the owner of the goat. Mpokolo, however, refused to take the money. He argued that although the goat was his, so was the offender.[1] He said that he was afraid of sorcery so he would take a token amount of 3s. only. Cikoja gave him this.[2]

A few months later the eldest child of Bt. Dwana Ina (F16) suddenly fell ill and died.[3] Kanyonga, Kofi and Mosa went to the diviner. Kofi, the son of Ayesi, went as the headman's representative. Kanyonga went as the warden of the security-group, i.e. the child's mother's brother. Mosa was the marriage society of the child's father. Kanyonga consulted the diviner who indicated that Kanyonga's mother Bt. Amina was responsible but that she was not a sorceress. Sorcery, he said, was introduced by an unknown person who was using Bt. Amina's grumbling as a screen. Kanyonga refused to accept the finding of the diviner, saying that his mother had never been "caught"

[1] His wife's collateral sister's child he also calls "my child".

[2] Mpokolo is a stranger in the village and in this situation Cikoja represents both segments so Mpokolo, even though the senior segment is guilty.

[3] Dwana Ina, called *Ahuma* or "the harmony", is believed to be without a doubt due to sorcery.

2: Mitchell E-5 (1946-1949) 1956 FT7 Yao FT7

613
578
759

by a diviner before. He went back and reported the matter to Chinja who accepted the finding. Kanyenga, however, argued that the real sorcerer was using magic to confuse the diviner. After some argument Chinja sent for the then senior living member of the matrilineage, Bi. Mkwinda (C6), who was living in Chinlo district, for Mbunda, a perpetual brother, and for Chiwaya Kawinga, his perpetual mother's brother. A big meeting was held at which all the important local headmen attended. The case was argued on the point whether Bi. Amina and her husband, who was implicated in the accusation, could be sorcerers. After some argument the court decided that it was impossible for Bi. Amina to be a sorcerer without Chinja also being a sorcerer, so that the accusation now settled on Chinja himself. The case was taken up to Chiwalo who refused to award compensation. He reviewed the various charges of sorcery that had been made in the village before and observed that after the death of one of the supposed sorcerers the village had lived peacefully. He deplored the new friction and warned that there was to be no migration from the village. He advised Chinja to mollify his sisters if he could. Kanyenga, Chinja's eldest sister's son, said that he did not think that it would be possible because the headman had virtually accused his sister of sorcery. Chiwaya Kawinga now said that there was no question of whether it could be done or not. It simply had to be done.

Above one month after this episode, Ajisa (F16), the last-born child of Bi. Amina, who was about 14 years old, died after two days' illness. When he was obviously very ill Kanyenga left with Mpulula to call Amida. They went first to wake Chinja who in turn sent for Gwili (F4) to be his representative. Kanyenga went off to a diviner at daybreak without waiting for the father's marriage survey. The diviner indicated that there was sorcery in the lineage which was at the back of the child's illness. Eventually, he indicated that Bi. Nsalika (F5) was the cause of the illness and it harked back to the dispute over the sifting basket and the goat. The diviner prepared suitable medicine and the two went back to the sick child. They got back about 8.30 a.m. and found the people congregated at the hut. In the meantime, Chinja had sent off another divining party, Amida (F18) and Jumma (F7). Kanyenga prepared the medicine and gave it to the child. It seemed to be getting no better and before Amida and Jumma returned Chinja sent Kanyenga and Gwili out to divine again. Then Amida and Jumma returned and indicated that the same person was responsible, and almost immediately afterward Kanyenga and Gwili came back with the same result. When Kanyenga heard this he went to Chiwalo and reported the matter. Chiwalo sent a messenger to call Chinja, Bi. Nsalika and her eldest sister's son Chimbo (F1), who was the senior male member of the senior lineage

2: Mitchell E-5 (1946-1949) 1956 FT7 Yao FT7

613
578
759

sequent. They were to go to Chiwalo's hut the next morning. During the night the child Ajisa died, and Chiwalo remarked that Cikoja was bad at heart and that he merely killed his people like chickens.[1] Four days later after the funeral a meeting was held to decide the cause of death. The arbitrator and chief's representative was the local court assessor. The man's party opened the discussion saying, 'If Cikoja is tired of us he should tell us. To-day he is killing his child. We know that Mpulula[2] has begotten a sheep. The sheep pen is filled and when Cikoja wants to eat he merely eats them.'[3] The arbitrator said that Cikoja had done a shameful thing and that they should make up a divining party to find the cause of death. Kanyenga immediately demurred and said that they had divined three times with the same results. Further divination was a waste of money. He insisted that they called Cibwana Kawinga. The meeting broke up and Cibwana Kawinga was called for. He came a day or two later and the meeting was resumed. He said, 'Cikoja, you are evil.[4] You have found it impossible to keep the village. Now what are you going to do with your children? The man's sorety says that he is going to take Mpulula away. Your brothers say that they are going to take their mothers away. Now what do you say to this?' Cikoja had no reply to make. Chiwalo then said that he would have to pay compensation to his sister. Kanyenga, however, said that they did not want money. They wanted to go away. Cibwana Kawinga here checked Kanyenga and told him that they would take Cikoja and give him a talking to, and instruct him on the traditional way of keeping a village together.[5] Chiwalo accepted this settlement of Cibwana Kawinga and endorsed his action.

When they got back, Cilimba told Cikoja and Mbande that he wanted to move out of the village because his 'mother' had been called a sorceress by his 'brother'. Cikoja was anxious to avoid further trouble and told his lineage members that he was going to build a hut for his second wife some distance from the village because his first wife did not get on with her. He put up a hut about half a mile away across the Nanwoor stream. Cilimba (F1) who was living virilocally, his mother Bt. Ntalika (E1), Bt. Mbwana (F2),

[1] This is a reference to the ghost-motif in Yao witchlore. Cikoja here, of course, is a symbol of the whole lineage, so that this imprecation is directed towards the whole lineage and not to Cikoja personally, as in the last dispute.

[2] The father of the dead child.

[3] Mpulula had begotten eleven children. This is another reference to the ghost-motif.

[4] Undaso—this word is also used to mean 'polluted'.

[5] *Kala ninse ondwe ninsi*—'the building of a village of old'.

2: Mitchell E-5 (1946-1949) 1956 FT7 Yao FT7

613 578 759 Kasui (F3), Bt. Madi (F10), Bt. Aliya (F11) and their children moved across the stream and built with Cikoja. One of Cikoja's wives stayed in the old village and the other moved across. Shortly after this Asimama (E6), Cikoja's sister, decided that she would like to move across to be with the headman. She reported to Kanyenga who sent her to tell Cikoja. Cikoja in turn sent her to tell Amida. Eventually, Cikoja, Amida, Kanyenga and Salimu (D3) had a meeting about it. Neither Amida nor Kanyenga, nor Salimu, was enthusiastic, but they said she should follow her own wishes. She moved across with her children. Asimama's arrival on the other side of the stream was greeted with some suspicion by Cilimba because she was a member of the junior lineage. However, Cikoja assured him that he wanted one of Asimama's daughters to fetch water for him. Cilimba was satisfied with this explanation and accepted the situation as it was.

It was not easy, however, and there were continual quarrels between the children of Bt. Ntalika and those of Asimama. The members of the junior segment in the old village also looked upon this arrangement with some suspicion. The friendship of Amege (F28), Asimama's daughter, with Asubiya (E9), her mother's younger sister was particularly deprecated by the members of the junior segment. Asubiya was warned several times that this friendship could only lead to sorcery.[1]

In the meantime, Salimu (D3), who will be the next Cikoja and who was the senior lineage member in the old village site, undertook most of the duties of the headman in that section. He settled most of the minor cases and saw to the divining. However, he reported his doings to Cikoja who was still the village headman.

In 1948, another death took place and the tension became evident again. Bt. Ntalika's child died. Kasui (F3) and Jauma (F7) went to the diviner, who revealed that Amege had gone to Salimu to grumble about what was going on in the other village, and Salimu had taken this opportunity of bewitching the child. Cikoja refused to accept this explanation and said that the diviner was a liar. When the body was being washed, a knife was found under the mat on which it was lying, and the story went around that a piece of flesh was taken out of the dead child's buttock.[2] Cikoja interpreted this as meaning that Bt. Ntalika herself had bewitched the child. He felt it unnecessary to call a funeral meeting. Shortly after this there was some friction between Amisa and her younger sister Asubiya, arising out of jealousy because of the difference in their harvests. Bt. Amisa was convinced

[1] This is based on the fear of backbiting. See p. 138.

764 [2] Once a person is dead the matrilineal relatives do not touch him. They leave the hut and the undertakers (*aŵile*) wash the body and prepare it for burial. They reported this finding to Cikoja.

2: Mitchell E-5 (1946-1949) 1956 FT7 Yao FT7

that Anbiya in her jealousy had gone to grumble to Bt. Ntalika about this. Rajabu (F20) who had heard about this called Cikoja and they assembled Bt. Amina, Bt. Bwana Iu and Anbiya in Bt. Amina's hut, and spoke to them about the dangers of backbiting. Cikoja remonstrated with the women saying, 'I don't want to hear about this again. When you love people do not love people who are strangers. Do not talk behind people's backs and bring war in the knots of your body-cloths.' 613 578 754

A few weeks after this, in June 1948, Alewinda (F17), a 3½-year-old daughter of Anbiya, died. When her mother saw that the child was seriously ill she took her to her patrilateral relatives in Liwonde area. She had barely got there when the child died. The headman of the village sent a message back to Cikoja to tell him of the death. He in turn sent a message to Amidu and Rajabu and they went to the village to attend the funeral. After the first mourning feast three days after the funeral, Kaifa, the child's mother's elder sister's son, and Malewaga, representing the village in which the child had died, went to a diviner who indicated that the cause lay in the backbiting of Anbiya about Bt. Amina, but that the sorcerer was Bt. Ntalika. The tension now had reached almost breaking point and after about six months Bt. Ntalika moved out into Liwonde area without announcing that she was going.

At the end of December, Anbiya's son Selemu (F16), aged 4½, suddenly became ill one night. In the morning Amidu and Rajabu and Nkatawila (D20), who was the husband's marriage surety, went to a diviner. He indicated that the cause was a girls' initiation basket which Ayesi kept. This basket, the diviner said, kept losing its strength and it was only on the death of a close relative that it would regain power. They returned and when they got near the village they could hear the women keening. They agreed that the diviner was a liar and returned and got their money back. The body was buried on January 3rd, 1949. Anbiya now left the village without announcing her intention and went to complain to chief Kawinga. Cikoja in the meantime, noticing that Anbiya was not present at the funeral, sent out men to search for her. After two days Kawinga's chief court ancmor, Masunda, brought Anbiya back to the village. He told Cikoja that he had cross-examined her and found that she said her elder sister was causing death because of her jealousy over the food. Masunda returned and some days later Kawinga wrote a letter to Cikoja telling him to come to the court village. This he did and was told to hold the mourning feast, but to take the people to the court village to hold the funeral meeting. There a divining party would be arranged and the cause of the death determined. 613 578 754 615

After the first funeral feast the people of Cikoja assembled at

2: Mitchell K-5 (1946-1949) 1956 F77 Yao F77

Kawinga's court village. Mazunda reviewed the events leading up to the calling of the meeting and asked Cikoja to give his statement. Cikoja replied, 'You say I am finishing the people. I do not deny it. If the people are being finished by my sister, then I am finishing them.[1] You may speak what is in your hearts.' Anthiya now made her statement. After this, Bt. Amina was called out. She denied knowing anything about the case. Mazunda at this point was about to send the case back to Cikoja when Matowa, a second witnesser, asked who the marriage sureties were. Amidu came forth as the woman's surety. Matowa asked him to tell the court about Anthiya's marriage relationships. Amidu then reviewed the history of Anthiya's pregnancies. He pointed out that the first child had died.[2] The second one also died. The diviner had indicated that she had broken a sexual taboo and the child had died from *ndoka* as a result. The third child was still alive. The fourth had died recently. The fifth was the one about whom there was a case that day. He recounted how they had gone to a diviner and how he had indicated that the cause of the death lay in the backbiting which the person herself had done. Mazunda cross-questioned Amidu about the *ndoka* medicine that was given and assured himself the complainant was satisfied that the second child had died of *ndoka* and not sorcery. Mazunda then called Salimu since the woman was living at the old village site under Salimu's charge. Salimu, who works as a tailor in an Indian store some miles away, said that he did not have a great knowledge of the case. Cikoja said he had nothing to say. Eventually, after some hours of cross-questioning, Mazunda decided that a divining party must be made up and the results of the divination reported to the court. Bt. Amina now stood up and said she was prepared to undergo the poison ordeal to prove that she was not a sorceress. She said that she would go with them to the diviner to find out the cause of the death of the child. Mazunda said that they would leave the matter at that. At the village they would have to decide on a divining party and they would have to give poison to a chicken to make sure that the divination was correct. After that Cikoja would have to report the matter to Kawinga and the case would be re-opened. Nyenje was at the inquest and said to Cikoja that if they were not relatives he would have other words to say to him about this business. As it was he did not see what he had to rejoice about. Cikoja said that he did not know, but that Nyenje should ask the owner of the village. Surprised, Nyenje said, 'Who is that?' Cikoja indicated Salimu.

[1] Cikoja is talking as a representative of his lineage here.

[2] The first death in a family is never divined for, because the Yao say that if this is done, it 'would chase the father away'.

2: Mitchell E-5 (1946-1949) 1956 F77 Tao F77

Ndiwa said that Cikuja might not to speak like that because it only made things difficult. 613

Two days after this Cikuja called a meeting at Ndiwa's hut in order to choose a divining party. Eventually they chose Kanyenga, Adimanu, Raini and Mum. Mum was the witness for Kanyenga who represented the woman's party. Raini represented the father's party, and Adimanu were to be his witness. Cikuja gave them go, and they went to look for a diviner. Eventually they found one and Kanyenga opened the consultation. The diviner indicated that the cause of the death of the child was *lindude*.[1] The party paid him and looked for a place to sleep. The following day they sought another diviner. Kanyenga again consulted and was told that Bt. Ntalika and her son were sorcerers but that the mother herself was ill with *lindude*. Kanyenga rejected the *lindude* explanation and insisted on the sorcery of Bt. Ntalika and Cilimbo. The diviner consulted again and said that the main cause of the death was the *lindude* and that the sorcery of Bt. Ntalika was added to the other. Adimanu here insisted that the sorcerer in reality was Bt. Amina. The diviner rejected this. He said the best way to use the divination was to give poison to a chicken. The party was at a loss to know what to do. In two divinations, a *likanga* was indicated twice, while sorcery was said to cloud the issue. They decided to give a chicken poison. They returned to Rajabu's hut in the village where he had married. Here they went Rajabu to tell Ndiwa that they were about to use a chicken at the poison ordeal, but that he must not tell Cikuja. They gave two chickens poison, one for *lindude* of the mother and one for the sorcery of Bt. Amina. The *lindude* chicken died, indicating that Bt. Amina was innocent. When Cikuja was told this he refused to believe it and sent them to poison another two chickens. The result was the same. He now decided that he would take the divination to a distant place and chose to go to Ngokwe chiefdom. Kanyenga led the divination party again. They consulted the diviner and after much waiting and sweating the diviner decided that the sorcerers were Bt. Ntalika and Cilimbo and that the *lindude* had nothing to do with it. He also specifically excluded Bt. Amina. The diviner now told the father's two representatives to stay behind while the woman's representatives fetched Cikuja. When he came, the diviner revealed the result to him personally. Cikuja was at a loss what to do in this situation. Two divinations including poison tests had indicated that *likanga* was the cause, a third and very exhaustive one had revealed Bt. Ntalika and her son. Neither had indicated Bt. Amina.

[1] *Lindude* is a type of pimple (the generic term for which is *likanga*) which, when it comes to a head and burns, causes the death of the last-born child.

2: Mitchell K-5 (1946-1949) 1956 F27 Tao F27

613 578 757 615 Eventually, in March, he decided to take the case up to Kawinga's court. Cikoja was not willing to accuse Bt. Nsalika and Cilimba publicly. Accordingly he went to Kawinga but he did not send for Bt. Nsalika. When Mamanda, the court sorcerer, heard this he refused to handle the case and told Cikoja that Bt. Nsalika had to be brought to court so that they could hear her statement. Cikoja and his people came back to the village and nothing more was done about it. In April, Rajabu wrote a letter to Cikoja telling him that he wanted to report him to Kawinga and to bring a charge for compensation against him because he had falsely accused his mother of sorcery.

I left the field in June and do not know what the result was.

The series of events are extremely complex. I have given only a summary of them. Nevertheless, the main themes in the history are clear enough. We see Cikoja as the representative of the lineage of any order whatsoever. We find in particular the opposition of the two collateral brothers, Kanyenga and Cilimba. They are the representatives of the two lineage segments in this situation. There is seldom any doubt about the affiliation of these two personalities. Commonly in the accounts of the divinations each rejects the diviner's finding if it accuses a member of his lineage segment. Note that the divination sessions itself becomes a field in which the opposition of the segments is expressed. Kanyenga continued consulting diviners until finally he got the answer he wanted. His opponents rejected these findings and eventually even discounted the chicken ordeal. The diviners' findings and the results of the poison ordeals, therefore, are bandied about between the opposed groups, and though the whole procedure of divination and accusations of sorcery is directed towards the extirpation of discordant elements in the community, in fact, it is only a facet of the underlying cause of the tension—the opposition of segments in an ever-segmenting lineage.

613 578 In addition to the structural opposition of Kanyenga and Cilimba there is a certain amount of tension among Cikoja's uterine sisters. Bt. Amina, Aimanna, Ayesi and Andaya have all had children. Bt. Amina is the senior and the relationship between her and any of the other sisters are difficult. In addition to this there is the tension between the generations seen in the attempts of the sons of Amina to bring a compensation claim

2: Mitchell E-5 (1946-1949) 1956 FT7 Yao FT7

against Cilinje himself. It is important that not once is a member of the junior major segment, that is a descendant of Cinileka (A2), involved in the dispute. Only the descendants of Atabiya (D1) and Amalimwa (D2) are involved, with the exception of Salima who appears as the representative of the villagers on the old village site.

The Opposition of the Generations

Succession arises as more and more sorority-groups, the daughters of women, reach adulthood, and as the sons of the same women become old enough to undertake responsibilities for the care of the women. There is, in this situation, a fundamental opposition of generations. A woman is bound to her own sisters and at the same time she is bound to her daughters. These bonds come into conflict when her daughters want to express their unity against their mother's sister's daughters. The mother must decide whether she will go with her daughters to their new village site, or whether she will stay with her sisters and possibly with her own brother. I found consistently that a mother seldom stayed in a village when her daughters were moving out of it. The bond with her children is stronger than that with her sisters. Yet the conflict is clearly present. It finds expression in the kinship terminology. A daughter is usually identified with her mother's mother. A woman's daughter's daughter inherits her name, her position and her property in much the same way as a man succeeds his mother's brother.[1] When this has taken place the terms of address of her parental generation are now reversed. In other words her mother's brother instead of calling her, 'sister's child' (*ripwe*), calls her 'mother' (*awa*). Sometimes the qualificative *wamaja* ('who has returned') is used to signify the difference. Her mother's mother's husband even before the succession has taken place calls her 'my wife', and I have recorded one or two marriages between a man and his wife's daughter's daughter. A man's daughter's daughter must also perform some of the funeral rites for her grandfather after his wife has died.[2]

We have among the Yao, therefore, the familiar principle of

[1] See Chap. V, p. 121.

[2] She cooks the ritual meal which he eats at the end of mourning to protect himself against ukubo. Here she ritually fills her mother's mother's place.

2: Mitchell E-5 (1946-1949) 1956 FT7 Tao FT7

the identification of alternate generations; and this is particularly significant when we realize that the tension between the filial and parental generations is most likely to find expression in the situation where a group of young adult women wish to leave a village, and their mother, if she is still alive, must make up her mind whether to stay or to follow them.

The existence of rules of succession for men, different from those for women, presents an interesting analytical problem which I have not yet fully explored. Clearly men must succeed to positions in the first ascending generation, for they are the active leaders in Yao society and those who are to succeed must be sufficiently mature to take over the responsibilities of leadership. Women, on the other hand, are usually not leaders so that succession to positions in the second ascending generation involves no difficulties. A young woman may take her mother's mother's name without involving any responsibilities of leadership. Yet the interaction of the two systems of succession presumably has some reaction on the social structure. A man's sister's daughter who succeeds to her mother's mother's position becomes the man's mother and the man's mother's brother's sister. The man's own sister becomes his mother's brother's mother.[1] The effect of this presumably is to achieve some balance of power between a man and his mother's brother. By the rule of succession for women, a man's sister to whom he is tied by the closest possible ties of kinship, and on whom he is dependent for political success, becomes his mother's brother's mother, so forming a common link between two potentially opposed persons. By the same reasoning a man's sister's daughter who is part of his sorority-group and who is likely to desert her mother's mother's brother to go with her mother's brother if there is a conflict, by succession becomes the sister of her mother's brother's mother's brother, so forming a unifying influence within the lineage. This problem emerged after my fieldwork was completed so that I have no evidence to support these suggestions.

Among the men, because of the struggle for political power, the opposition of alternate generations is much stronger than among women. This emerges most clearly in the institution of marriage sureties.

The duties of the marriage sureties towards their wards are

[1] I am grateful to Prof. Gluckman who pointed this out to me.

2: Mitchell E-5 (1946-1949) 1956 FT7 Yao FT7

part of the normal duties of a matrilineage leader to his kinsmen.[1] But ideally each marriage is supposed to have two marriage sureties. The first, or senior, surety is called *ndukwangana*, which was described to me as 'the log that lies at the doorway'. The picture here is of a wise old man who cannot move around too easily, but who sits at the doorway of his hut ready to give advice and information to his younger kinsmen. In contrast to this is the junior surety. He is called *ndapamane* or the 'beater down of dew'. He is pictured as a young man, who is vigorous about his daily tasks and who is waiting before the dew has evaporated in the morning, at the door of couples who have difficulties. He is essentially the 'one who walks about'.

The senior marriage surety is ideally supposed to be a mother's brother, while the junior marriage surety is supposed to be a brother. In fact, while the junior marriage surety is almost always a brother, though not necessarily an elder brother, the senior, for reasons which will emerge later, is frequently not a mother's brother. However, in the Yao mind the two are fixed in the relationship to each other as mother's brother and sister's son. The fundamental conflict of their positions is expressed by the opposition of the concepts of the 'recumbent log' and the 'active man'. This view is consistent with the segmentation and internal differentiation that must go on within a lineage. As the segments of the matrilineage become progressively independent of each other, the senior relatives, who formerly held them together, become less and less active in their affairs. In Yao idiom they become 'recumbent logs'.

The relationship between mother's brother and sister's son therefore is fundamentally ambivalent. By the values surrounding the concepts of descent and relationship, a sister's son and mother's brother are close kin and bound together in their attachment to a common ancestry and to a common set of living women who are in their joint care. At the same time the mother's brother, belonging as he does to the parental generation, must be respected by his sister's sons. Recalcitrant sister's sons may be made to toe the line by a number of different sanctions. A mother's brother, for example, may take his case to an arbitrator and bring the force of public opinion to bear upon his

[1] I have described the rôles of the marriage sureties more fully in *Marriage among the Machinga Yao*.

2: Mitchell E-5 (1946-1949) 1956 F77 Yao F77

604 sister's son. This, however, is not common because matters such
627 as these, the Yao feel, ought to be settled within the matrilineage, or at least among kinsmen. The more usual procedure is for the mother's brother to take his complaint to some senior matrilineal relative who may be a perpetual mother's brother of the mother's brother, as say Chiwusa Kawinga is to Chinja.[1] Or if the matrilineage is part of a village, the mother's brother may take his case to his village headman, who is as likely as not his perpetual father. The senior relatives have the force of authority and public opinion behind them and frequently some agreement can be reached at this level. Where this is not possible, say because the perpetual elder relative lives too far away, the mother's brother may take the sister's son to court and bring the sanction of the Native Authority's punishment upon him. This is very rare.

604 There is still a certain mystical sanction behind the mother's
788 brother's control over his junior relatives. This is based on the curse, which in turn draws on the belief in common ancestor spirits. A mother's brother may say to a sister's son or other junior matrilineal relative: 'If you have never sucked from the breast of my sister, nothing dreadful will happen to you.'[2]

604 The fear of sorcery is another force which operates to control
789 the wayward activities of a sister's sons. People in senior generations are usually looked upon as having particularly wide knowledge of potent medicines. Though a sister's son may sometimes use sorcery against his mother's brother, the reverse is believed to be more likely to happen. I have recorded elsewhere[3] the details of a case where a sister's son left a village, against his mother's brother's wishes, to find work in town. He subsequently met his death in an accident while trying to get the honey out of a wild bees' hive in a treetop. At home his death was attributed to the sorcery of his mother's brother whose will he had frustrated.

604 On the other hand the sister's sons, while bound by an ethical
678 code to honour and respect their mother's brothers, find that in fact these stand in the way of their own personal ambitions. A man's heir is his sister's son and it is quite understandable that there should be some tension between a man and his heir. But

[1] See p. 132. [2] See Chap. VI, p. 133.
[3] 'A Note on the African Conception of Causality', 34-5.

Mitchell E-5 (1946-1949) 1956 FT7 Tao FT7

the opposition between mother's brothers and sister's sons in general has a much wider basis than this. Any man is likely to have more than one sister's son of whom only one is his heir. Yet his other uterine nephews are as much opposed to him as the heir is. The tension lies in the position of the mother's brother *vis-à-vis* his sister's sons within the segmenting lineage. The different security-groups within the matrilineage are held together through the authority of the mother's brother. This centrifugal force is undermined by the attempts of the wardens of the various security-groups to break away and form new villages of their own. In this way the segmentation and differentiation of the matrilineage is really a facet of the general political process in which groups are for ever trying at once to demonstrate their autonomy by setting up new villages, and their unity by remaining in large integrated villages. Conflicts between sister's sons and mother's brothers, therefore, are common.[1] For a typical example we need not go outside the village that I have chosen to illustrate the localized matrilineage.

Ali Kasunka (C6) fell out with his mother's sister's daughter's son Mwanace (D10). The trouble started when Ali Kasunka who had married the sister of the cook came to live uxorilocally in Chiwalo's area. While in Zombe he had asked Mwanace to come to live virilocally in his village to keep things in order. It soon became apparent that the women were not satisfied with Mwanace and every time that Ali Kasunka visited them they had tales to tell of his failure to keep the peace. Ali Kasunka then decided that he would move his village from Zombe area to Chiwalo's where he was married, so that he could stay married to his wife in Chiwalo's area and keep control over the village. Soon after the change had taken place the infant daughter (E15) of Biti Mizunda (D19) became ill and died. Ali Kasunka went to the diviner with Adamsi, the child's father's marriage sorcery, to establish the cause of the death. The diviner indicated that it was the sorcery of Mwanace. Ali Kasunka took no action on this at all, but he remembered it. Some time later he himself became ill and this time his sisters Anzuyeje (C8) and Biti Kasembe (C5) went to the diviner. Once again he indicated that Mwanace was responsible because he was jealous of Ali Kasunka's authority in the village. Tension increased when the husband of Biti Sale (D15), Wayison, became ill. His wife immediately went to tell

[1] In 31 village splits involving matrilineal relatives, 9 hinged on MB-ZS conflicts.

2: Mitchell E-5 (1946-1949) 1956 FT7 Yao FT7

[604] Mwanace. He was the junior marriage survey to the marriage and it
578 was his duty to go to the man's marriage survey, report the matter and arrange to take some action to get the man well again. Mwanace, however, refused to take any action. Instead he cunningly said, 'Take the matter to Ali Kasunka, it is his village.' The woman did so, and Ali Kasunka asked immediately whether she had not taken the matter to Mwanace. She replied that she had and repeated Mwanace's words. Ali Kasunka took the matter up with Mwanace who now objected to being ordered about. Ali Kasunka, however, impressed on Mwanace that the village was his (Ali Kasunka's) and the authority rested with him. He then went to the man's home to tell them of Wesiwe's illness. The man's representative came and he and Ali Kasunka consulted a diviner. They found that the man was ill from witchcraft, which he had contracted in his home village. They found medicine and treated him and he recovered.

Things came to a head in 1947. Mwanace's younger sister Nyangu
[604] II (D11) was married to a soldier who was away. One morning
578 she came to her mother's elder sister, Mhalayao (C1),[1] and told her
§53 that she had found semen on her pudenda and could not recall having
'R7 had intercourse with anyone. Mhalayao told Ali Kasunka about this.
[609] It was clearly a matter for divination and Ali Kasunka called Mwanace and told him that they ought to consult a diviner. But Mwanace's attitude, even in such a crisis as this, was hostile. He refused and said it was not his work to do this sort of thing. Ali Kasunka therefore went to a diviner with his sister Mhalayao. The diviner said the sinner was Mwanace's. He said that he had entered her hut magically and had sexual intercourse with her without her knowing it.[2] When Ali Kasunka got back to the village he called Mwanace and asked him what tricks he was playing in the village. Mwanace said that he had done nothing—it was not his village. Ali Kasunka then vaguely hinted at his crime. Mwanace pressed for more details and Ali Kasunka accused him outright of sleeping with his sister. He had hardly uttered the accusation before Mwanace had drawn a knife and attacked him. Mwanace was screaming something to the effect that Ali Kasunka had come to him with lies about having seen a diviner. Ali Kasunka beat off the attack and reiterated the accusation. Mwanace now turned his rage upon the woman and tried to catch her. Two of the men in the village then caught Mwanace and subdued

[1] Her mother, Amalinna, was dead.

[2] This is called *ciponcoya*. It combines the use of magic with sister-incest.
[595] To the Yao mind there could be no clearer proof of sorcery. I have already mentioned the importance of sister-incest in relationship to the beliefs surrounding the sorcery-group. See p. 146.

him. The woman in the meantime had run to Chiwale's but half a mile away. Here she complained to the chief that Mwanace wanted to kill her. Chiwale refused to listen to her complaint and sent for Ali Kasunka. When he had come and explained the sequence of events, he continued saying that he would like to take the case to court. Chiwale, who was Ali Kasunka's wife's father's sister's son (hence a classificatory younger brother) and whose headman Ali Kasunka was, refused to arbitrate in the case but referred it to Kawinga. On the day of the case the woman's husband came back from the Army. The case was tried and eventually the court assessors awarded a damages claim of £3 to be paid by Mwanace to his sister. The husband, at the same time, said that he could not remain married to her because whenever he saw her he would think that she had slept with her brother and in court he gave Ali Kasunka a marriage termination permanent. The tension between Ali Kasunka and his 'sister's son' did not end there however. When they got back to the village Ali Kasunka remonstrated with Mwanace saying, 'Are you not ashamed to have married your sister?' Mwanace said that he could not stand that sort of thing and went back to live uxorilocally.

A crucial point in this case history is that the women did not like Mwanace. Almost certainly there would have been a split in the village had the women had more confidence in Mwanace. The tension between Ali Kasunka and Mwanace, although the conflict is inter-generational, started, as it consistently does, from the relationships of a man to the women of his matrilineage. Without the support of the women, younger brothers or sister's sons are impotent against the power of their senior relatives. It is only when they can induce the women to follow them and to leave their rivals that they can found a new village and thereby begin to earn prestige. Therefore, although the men are the active agents in bringing about a physical act of fission, they are in fact only making manifest a situation which is latent within the lineage.

The position of the senior male matrilineal relative is of fundamental importance in questions involving segmentation. His position is seen most clearly in the dominant matrilineage, in which the name of the village is inherited. The Yao practise 'positional succession'. A man not only succeeds to his mother's brother's name but also to the position of the mother's brother in the social structure as a whole.[1] It follows that when the

[1] See Chap. V, p. 121.

2: Mitchell E-5 (1946-1949) 1956 FT7 Yao FT7

successor takes over the name of his predecessor, he assumes the position in the structure of the village as a whole, which was occupied by the first of that name. For example, when Cikuja VI succeeded to the name he moved to the position of Cikuja IV (who founded the village), as far as the members of the village were concerned. He is therefore the senior male matrilineal kinsman in the dominant lineage in the village, and Selimu, in spite of being more senior by generation, must call him mother's brother. The man who succeeds to the name of the founder of a village, or to the name of any important matrilineage member, therefore represents its maximum span to the members. From one point of view he is founding ancestor of the dominant lineage and is, therefore, lifted above the conflicts of the component sections; but from another, since he represents all other sections to any one segment, he is involved in all the conflicts. Cikuja, for example, is the senior marriage surety to all the members of the dominant matrilineage in his village, while the junior marriage sureties are drawn from the component lineage segments. In this way he unites the dominant lineage in that all difficulties are brought to him by the junior sureties. But the junior sureties accuse Cikuja of being a sorcerer when they see him as a representative of an opposed section. Whatever the degree of segmentation within a matrilineage, he is still a mother's brother to them all, and all the component segments are united through him. This is a concept aptly figured in the synonym for a senior matrilineage member, a village headman, or a chief *chunje* — a bundle of grass; that is, a person in whom many different members are bound into one.

CHAPTER VII

THE PATRILATERALLY-LINKED GROUPS

The Position of the Husband and Father

MATRILINEAL descent provides the principle on which the smallest of villages, the hamlets, are organized. But not all villages are made up of huts owned by members of one matrilineage as in Ali Kasunka's village.[1] Most villages in fact have a more complex internal organization which may be epitomized as a dominant matrilineage which carries the village headmanship, and a number of subsidiary lineages linked to the dominant lineage by various means. The most common of these is the patrilateral link whereby the subsidiary lineage is connected to the dominant lineage through one of its men.[2] The subsidiary lineage develops in the village from the matrilineal descendants of the virilocally-married wife of one of the men of the dominant lineage, so that the subsidiary lineage, initially at least, are the 'children' of one of the men of the headman's matrilineage. Their peculiar position in the village must be seen in the light of the general position of the father in Yao society.

The father, obviously enough, is also a son-in-law; obvious as this may seem in English it is charged with meaning for the Yao. When parents-in-law refer to their daughters' husbands they use the term *akwepwe*; and they in turn are called this by their sons-in-law. But the *akwewini* are essentially men who are living uxorilocally and *akwewini* is the general status of being a man in uxorilocal marriage. *Mkwewini* thus cannot be translated into English without periphrasis and I translate it merely as 'husband'. I emphasize, however, that whenever I speak of *husbands* or the *husband* in general I mean 'husbands in uxorilocal marriage'. The Yao assume that marriages as a rule are uxorilocal. Usually the young husband builds a house in his wife's village and is expected to live there for the rest of his life. But

[1] See Chap. VI, pp. 140-3.

[2] I have called this type of village structure the 'sheep' in my earlier essay, 'The Yao of Southern Nyasaland', *Seven Tribes*, 332 ff.

2: Mitchell E-5 (1946-1949) 1956 FT7 Tao FT7

he cannot escape the fact that in his wife's village he is only a 'billy goat' and that his 'true house' is in his matrilineal village. The pull of the matrilineal village on him, therefore, is always very strong and he is constantly trying to return there. His wife's responsible relatives are constantly trying to avoid this because they know that in time they are likely to lose the children who will probably settle in their father's village if they grow up there. In general, therefore, a husband must have a very good reason before he can get his wife's kinsmen's permission to take her and her children to his village. His wife's relatives do not easily yield. But a headman must live in his own village so that nearly all headmen being at least one of their wives into their villages. Other men sometimes succeed in doing so especially if their wives are past child-bearing, but it is typically the headman's wife who lives virilocally.

The husband's interest in returning to his matrilineal village is heightened by the fact that a man in his wife's village is looked upon as the typical man without prestige: a stranger, whose duty is largely procreative. The theme song at the installation ceremony where the husband was compared with a billy goat, and the common epithet 'chicken rooster' for a husband, reflect the attitude of the Yao towards him. In the song I quoted, the husband was said to be unable to climb high in his village of marriage, however rich he may become.[1] He is, nevertheless, an essential member of the village and the Yao say that it can succeed neither economically nor physically without his aid.

A husband becomes more important when he stays in a village for a long time. He becomes known intimately to the villagers and is conversant with their affairs. He is, therefore, able to advise on many private intra-lineage and intra-village affairs and may even become a marriage surety if there is no more suitable person available. Also in time the husband's position in the village changes. As his children grow up and become active members in the matrilineage, his position of husband becomes supplanted by his position of father, which, in a matrilineal society like that of the Yao, is significant in the same way as that of the mother's brother is in patrilineal societies.

The Yao recognize the close bond between father and child. This bond is conceived to be both social and physical and is

[1] See Chap. V, p. 119.

2: Mitchell E-5 (1946-1949) 1956 FT7 Yao FT7

reincarnated in the Yao theory of conception.[1] They believe 593
that after intercourse the woman clots and embeds itself in the 892
womb. From this the child develops and is nurtured by the
mother until it is due to be born. Subsequent acts of intercourse add women to the body of the child and make it fat. Semen from other men may be used, too, to feed the child in its intra-uterine life, but its body and blood are derived from the woman which first clotted. In Yao opinion there can be one father only.

Not all acts of intercourse lead to impregnation because sometimes, for various reasons, especially in immature women, the 593
women fails to clot. There is therefore, to the Yao way of think- 892
ing, some difficulty in determining the 'father' of a child. This 895
difficulty is met by the belief that the intra-uterine child in some 898
way knows about the doings of its parents and in particular knows who its father is. It therefore refuses to be born unless its father is recognised.[2] Hence if a child is born without undue puerperal complications it is assumed to be the offspring of the man who is currently living with its mother. If labour is prolonged, however, the relatives call for confessions (*lupwa*) from both husband and wife. The husband's confessions are usually formal and simple. The wife's confessions on the other hand are detailed and complete. She confesses the name of an adulterer, and her midwives, including the husband's sisters as his witnesses, wait for the next birth-spasm. If the child is not born at this spasm she is told to confess again. Only after she has confessed to a lover whom the Yao assume to be the genitor will the child eventually be born. After this the aggrieved husband summons the adulterer to court and he is made to accept the fatherhood of the child.

The act of formally accepting the paternity of a child, which 593
is also done when a woman has a child out of wedlock, confers 898
rights of two types on the child. The first set of rights is directly economic and physical. The father is expected to give the mother salt, money for relish, and cloth to help her rear the child. But 593
this side of a father's duties to his child ceases as soon as another 586
man marries the woman. The new husband then takes over the

[1] I have dealt with this more fully in *Marriage among the Matrilineal Yao*.
[2] It also refuses to be born for other reasons, but the first considered is always the adultery of its parents. See p. 138.

2: Mitchell E-5 (1946-1949) 1956 FT7 Yao FT7

583 586 economic responsibility of all the woman's children regardless of whether he has begotten them or not. For example, people say that a woman married my clerk so that she could have her son initiated. The costs and fees for this boy's initiation amounted to over a pound.

583 602 The other set of rights that paternal recognition confers on the child are the moral rights against his paternal kinsmen. A person may turn to his 'father's people' (*bwitati*) in times of dire need, especially if one of them is rich. This right persists after divorce, though the children are adult and otherwise economically independent. For example, a woman who was married to a labour migrant needed clothes badly. She turned to Chiwalo her father, though he had been divorced from her mother for more than 15 years. People in trouble often run away to their father's village and find shelter there. A man who wanted medicine for success in gambling asked his father for it. Another who had broken a sexual taboo confessed to his father who found suitable medicine for him. In each of these relationships there was an intimate personal element.[1] A person has the moral right to appeal to his father or paternal kinsmen, but he has no legally enforceable right to demand help. He has to rely on their kindness and charity. There are few fathers who would deny their children's requests if they are reasonable, but they can if they wish to.

583 586 613 The divorce rate is high among the Yao[2] and a typical family of five uterine siblings may have three fathers. Furthermore, a man should not marry into the lineage segment where his brother has married, so that the patrilateral kinship ties of the members of matrilineages tend to spread widely in the vicinity of the village. The effect of this is that the members of the lineage as a whole have widespread connections with neighbours upon whom they may rely in times of distress. But of the individual members of the matrilineage only a few share the same group

[1] Compare Fortes's description of uterine kinship among the Tallensi: '[it] is essentially by a personal bond, a bond of mutual interest and concern uniting individual to individual', *The Web of Kinship*, 37.

[2] Eight of every ten men and women over the age of 40 have experienced a divorce at some time of their lives. Excluding the contingency of death a married couple have only 30 chances in 100 of living together for 20 years. For details, see *Marriage among the Machinga Yao*.

2: Mitchell E-5 (1946-1949) 1956 FT? Yao FT?

of patrilateral kinsmen, so that these bonds are personal and distinctive for each member.

The Development of the Corporate Identity of Patrilaterally-linked Groups

The parent-child relationship is reflected in the structural relationships of a patrilateral group to the dominant matrilineage. Children are less strongly tied to their father than to their matrilineal kinsmen. Usually when a woman dies or is divorced while living virilocally, her children return to her matrilineal village. If the children are too young to express their own wishes, their mother's brother comes for them and they are formally returned to their village of origin. Occasionally children who have grown up in their father's village, especially if they have married their cross-cousins there, refuse to move back to their matrilineal village. They prefer to remain in their father's matrilineal village where they know people more intimately. In time, as they grow older, the women have daughters who may marry uxorilocally and thus a section of a foreign matrilineage begins to develop in the village.

The village as a social unit is more closely integrated when the children who are living there with their father are still young. They do not yet form a corporate group within the village. Their affairs are supposed to be controlled by their mother's brother, but in fact the headman, who is usually their father or a paternal kinsman, may settle many of their minor difficulties and find medicine for lesser illnesses, without bothering their mother's brother. When the children become adults and begin to assert their own wills the position in the village becomes more unstable. As the daughters grow up and marry, their brothers become their junior marriage sureties. If the mother's brother lives far away, the father of the children may be the senior marriage surety. He still has a personal attachment to his children, but his sons' relationships with him may now become affected by structural elements as they tend to interact, with him and others, in certain situations as representatives of corporate groups. As the village develops a son takes over the position of senior marriage surety to the headman's wife's descendants and he becomes the senior male lineage member, while his sisters' sons begin to take over responsibilities for their sorority-groups.

2: Mitchell E-5 (1946-1949) 1956 FT7 Yao FT7

593 613 621 The headman and father is now no longer directly concerned in the affairs of the linked lineage, and may only appear in their affairs formally as an adviser or an arbitrator in disputes. For example, he is advised of deaths in the village and of the disputes that have arisen and been settled. But this is part of his relationship to the linked lineage because of his headmanship. A fairly long-established village, therefore, contains two, three or four related lineages with complete autonomy in internal affairs yet together forming one community—one village under the leadership of the headman. As the village persists in time and successive village headmen and other men of the dominant matrilineage bring their wives into the village, related lineage segments develop from them, and the internal structure of the village becomes more and more complex.

613 621 An example of a village of this kind is Cikoja. It has 47 huts.

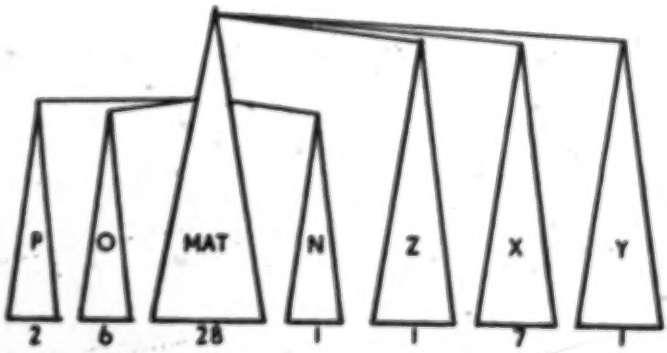

Diagram 4. The Ownership of Huts in Cikoja Village.

One of them is a dormitory for adolescent boys and we may ignore it in this analysis. Members of the dominant matrilineage live in 28 of the huts. Members of patrilaterally-linked groups are living in the remaining 19 huts. There are 6 of these patrilaterally-linked groups in the village and I have indicated them by the letters N, O, P, X, Y and Z. Their origin is as follows:

Z	A descendant of Cikoja IV's first wife	1 hut
X	The descendants of Cikoja IV's second wife . . .	7 huts
Y	The descendants of Cikoja IV's third wife	1 hut

2: Mitchell E-5 (1946-1949) 1956 FT7 Yao FT7

N A descendant of Cikoja V's first wife . . . . 1 hut 613
O The descendants of Cikoja V's brother's first wife . . 6 huts
P The descendants of Cikoja V's brother's second wife . . 2 huts 621

All these wives were slaves. The present Cikoja has no children.

In this table I have counted huts owned jointly by a member of the dominant matrilineage and a patrilateral group (i.e. in cross-cousin marriage) as belonging to the matrilineage; huts belonging to Z and X group as Z, etc. The exact ownership of the huts is set out in Table XXVII. It shows the number of

TABLE XXVII

OWNERSHIP OF HUTS IN CIKOJA VILLAGE

Origin of wife:	Origin of husband: Mat.	Z	X	Y	N	O	P	Outsid.	Wid.	Div.	Total
Mat. .	—	1	2	—	1	—	—	15	1	1	21
Z . .	—	—	—	—	—	—	—	1	—	—	1
X . .	1	—	—	—	—	—	—	7	—	—	8
Y . .	1	—	—	—	—	—	—	1	—	—	2
N . .	2	—	—	—	—	—	—	1	—	—	3
O . .	—	—	—	—	—	—	—	3	—	2	5
P . .	—	—	—	—	—	—	—	1	1	—	2
Outsid.	3	—	—	—	—	1	—	—	—	—	4
Wid. .	—	—	—	—	—	—	—	—	—	—	—
Div. .	—	—	—	—	—	—	—	—	—	—	—
Total	7	1	2	—	1	1	—	29	2	3	46

Mat. = Member of the dominant matrilineage.
Z, X, Y, N, O, P = Groups linked patrilaterally to the dominant matrilineage.
Outsid. = Outsiders or members of other villages.

men and women in the village who are married either to spouses from other villages or from this village, and the men and women who own huts but who are widowed and divorced. The distribution of these huts is set out in the village plan in Appendix D.

We have already seen that the social distance between sections of the matrilineage is reflected in the physical separation of their huts.[1] The social distance between the dominant matrilineage and the patrilaterally-linked groups is much greater than between

[1] See Chap. VI, p. 164.

2: Mitchell E-5 (1946-1949) 1956 FT7 Yao FT7

613 621 sections of a matrilineage, and accordingly the huts of members of the dominant matrilineage are physically separated more distinctly from the huts of members of the patrilaterally-linked groups than from one another. As they develop their corporate identity the members of each matrilineage tend to build together and a little distance away from the main settlement of the other matrilineages. In Cikoja's village this tendency is seen quite plainly. There are two large patrilaterally-linked groups in the village. These are the children and matrilineal descendants of Cikoja IV's second wife (represented in the plan as N), and the children and matrilineal descendants of the first wife of Maperera, the brother of Cikoja V (represented in the plan as O). These two groups are situated quite separately from the main matrilineal block of the village. The huts of X matrilineage are hidden from the view of the rest of the village and must be reached by a path. The space between huts of O matrilineage and the remainder of the matrilineal block is clear, but in it there are some large trees and the grave of Cikoja V. The huts of the three women and the one man of N matrilineage are close together in the village but scarcely distinguishable from the huts of the main matrilineage. The huts of two women of Y matrilineage are set on the extremity of the village and are not yet separated from the huts of other lineages. Note how the huts of the villagers who have married their 'cross-cousins' are placed within the village as a whole. Huts 32 and 33 belonging to the two women of X lineage have been placed between the main block of the X matrilineage and the matrilineage of Jauma (Ma_1), who is married to one of these women. Huts 10 and 11, where members of the dominant matrilineage and the patrilaterally-linked lineage N have intermarried, are placed on the mutual fringe of these two groups. The three men of the patrilaterally-linked lineage X who are married into the dominant lineage form a little block in the north-western corner of the village. As soon as the patrilaterally-linked groups develop their identity and are able to express their autonomy, they tend to build in separate sections and to form corporate but component parts of the village.

613 582 One of the clearest ways in which the autonomy of the matrilineage is expressed is in the arrangements made about marriage sureties. In Cikoja's village, Cikoja himself is senior

2: Mitchell E-5 (1946-1949) 1956 FT7 Yao FT7

marriage surety for only one member of the linked lineages. This is Naliwa (D39), who is the oldest surviving man in all the linked matrilineages and who is looked upon as the senior among them all. Naliwa is the senior marriage surety for most of the marriages in the linked matrilineages, but Katoli (D33) has taken over the duties for a number of his own lineage members. Table XXVIII lists the senior marriage sureties in all the

TABLE XXVIII

SENIOR MARRIAGE SURETIES IN CIKOJA VILLAGE

Surety	Rel.*	Lineage Affiliation						Total
		Mat.	Z	X	Y	N	O	
Cikoja . . .	Mat.	44	—	—	1	—	—	45
Naliwa . . .	Y	—	—	—	5	8	13	26
Katoli	X	—	3	12	—	—	—	15
Mbwana . . .	X	—	1	2	—	—	—	3
Suwedi . . .	X	—	—	1	—	—	—	1
Other† . . .	—	1	—	—	—	—	—	1
Total . . .	—	45	4	15	6	8	13	91

* This is the lineage affiliation of the senior marriage surety. Cikoja is the headman and automatically senior lineage member. Naliwa is the most senior surviving member of Y lineage. Suwedi is most senior in X, followed by his younger brother Mbwana and then his sister's son Katoli.

† This is Cikoja's own marriage. His perpetual younger brother Mbunde is his senior surety.

Note: There were two marriages in P lineage for which I did not record the marriage sureties.

marriages I recorded in Cikoja village. Here, age is important. The male members in the lineage of Cikoja V's wife and of Maperera's wives are all much younger than the members of Cikoja IV's wives' lineages. The descendants of Cikoja V's wife and of Maperera's wives all have junior sureties from their own lineage, but so far none has become a senior marriage surety.

As time goes on, the affairs of the linked lineage, therefore, become regulated more and more within the lineage. The headman and perpetual father recedes from the picture but is never entirely obliterated even in his relation to a linked-matrilineage which moves out to found its own village.

2: Mitchell E-5 (1946-1949) 1956 FT7 Yao FT7

613 The father and headman is almost forgotten in those villages
621 which, though founded by him, do not contain any of his
622 matrilineage. Sometimes men who have a number of adult children move away and found small villages of their own. I have struck a few villages of this type on the outskirts of White settlement areas at Namwera and near Zomba. The man has been a servant of the Whites as, say, an estate labourer. After ten or fifteen years on the estates he decides to stop working. Local men have probably married his daughters and he has made acquaintances with local people, while his attachment to his home village has become attenuated. Consequently, with his daughters he sets up his own homestead somewhere near the estate. He is probably both senior and junior marriage surety for his daughters' marriages, and also responsible for the welfare of his children and grandchildren. He reports serious illnesses and deaths to his wife's brother or her male uterine kinsmen, but otherwise he runs the internal affairs of his village as if he were the senior matrilineal kinsman. But as his sons grow up the sorority-group organization exerts itself, and soon his adult sons begin to take over the more arduous duties concerning the affairs of their sisters. They now walk to a sister's husband's home to tell of the husband's illnesses, or trudge for miles to find a diviner when one of the babies is ill. Their father still retains control over the village land and other important affairs concerning the village as a whole. At this stage in its history the hamlet will be known by his name. When he dies the control of the hamlet passes to his eldest son, and now it assumes once again the pattern of the ordinary Yao village. For a while it may retain the hame of the father, but in due course it begins to be known by the name of the son. Gradually the father fades into the background and the son comes to the fore. Eventually, when the son dies, his sister's son assumes control over the village and inherits the name. Now there are probably some of the original headman's sons' children living in the village and forming the nucleus of a linked matrilineage. In spite of the foundation of the village as an extended family, the lineage principle soon begins to mould the village into the typical Yao pattern. It is clear from many of my genealogies in Malemia area that when villages first moved in they were made up of a man and wife and children. Now after, say, twenty years the 'extended family' pattern has com-

2: Mitchell E-5 (1946-1949) 1956 FT7 Yao FT7

 613

pletely disappeared and we have in its place a straightforward 621
localized matrilineage as in Ali Kasunka village. 622

The Headman as the Link between the Dominant Lineage and the Patrilaterally-linked Groups

A headman's position when his own children or the children 578
of his predecessor have started to operate as a corporate group 613
in the village is clearly difficult. To the dominant matrilineage 622
they are outsiders, and they are a source of tension in the more complex villages. This, in essence, is the situation about which the officiating headmen have almost certainly warned him at the installation ceremony, when they told him to beware of his wife's chatter, because it may bring about a split of the village. The headman occupies a position of jural authority over his matrilineal relatives. He has succeeded to the name of his mother's brother and is structurally the most senior matrilineal kinsman in the village. He is directly responsible in court and outside it for the behaviour and welfare of the matrilineage members. At the same time he is personally attached to his children by ties of intimacy and sentiment. Where there is a conflict between his own children and the matrilineage members he is placed in an invidious position. By legal right he should support his lineage members, by moral right he cannot spurn his children. What he tries to do as a rule is to browbeat his matrilineal relatives into submission to maintain the peace within the village. He runs the risk, however, of alienating the support of his sisters who may turn to his younger brothers and leave the village. This is what happened in Mponda's village, as I have outlined earlier.[1] Here, it will be recalled, a quarrel started between two young girls over a pounding mortar. It spread to the mothers of the girls, who were the headman's wife and his sister. The headman tried to browbeat his sister into submission, but she immediately turned to her younger brother. The result was that the headman lost his sisters to his younger brother.

The way in which the two opposed groups in the village crystallize out into opposed factions cannot be more clearly shown than in the sequence of events in Mpakata village, in January 1947.

Mpakata was the headman of the village, and he had three younger brothers, Walusa, Merison and Nanculuya. Ali Cibwana, Mpakata's

[1] See Chap. VI, p. 155.

2: Mitchell E-5 (1946-1949) 1956 FT7 Yao FT7

578 613 622 adult son, went to Walusa one day and borrowed a chicken. Some days afterwards Walusa asked for payment for the chicken. Ali Cibwana took offence at the way in which Walusa asked for payment and told him so. Walusa remarked that Ali Cibwana was insolent and insisted on the payment for the chicken. Ali Cibwana now said that if his father's brother insisted on asking in this rude way he would not be paid back at all. The tempers of the two men became more and more frayed until at last Walusa threw Ali Cibwana to the ground. When Sanudia, Ali Cibwana's younger brother, saw this he grabbed up a stick and came up to Walusa and asked him why he had thrown his elder brother down. Walusa had hardly time to answer before Sanudia had struck him. At this Walusa's younger brothers joined in the fight. Mpakata now rushed up and started to support his sons against his younger brothers. When Mpakata's sisters and sisters' daughters, who were pounding, heard this, they took up their pounding pestles (poles about five feet long and three inches in diameter) and came running to Mpakata's younger brothers' assistance. When Mpakata saw these women coming with their poles he dashed into his house and emerged with a stick with which he defended himself. The noise and clamour had by this time attracted a number of strangers from a nearby village and they were able to pacify Mpakata's villagers. The matrilineal relatives of Mpakata gathered in one part of the village and Walusa told them they ought to leave. They decided, nevertheless, 'to say goodbye' [1] to Kaumbwe, who was a perpetual elder brother of Mpakata. Kaumbwe called in an unrelated village headman named Idi, and they held a meeting in the village the next day.

The dispute was discussed in the presence of the arbitrator. Walusa said he wished to leave the village with his sisters. Idi, however, told him that he should not do this but that they should take the matter up to Chiwalo's court. On an agreed day Mpakata and his children and matrilineal relatives went to Chiwalo's court where the case was arbitrated on by Capola who lived near to Mpakata. He found Mpakata guilty and ordered him to pay 10s. to Walusa. At the same time he told Walusa that he was not to take the female members of the matrilineage away from the village. And there the matter rested.

A village headman in Yao 'binds the village',[2] and when the village is made up of linked groups as well as his matrilineal kin,

[1] Ostensibly to say goodbye but in fact to air their grievances.

[2] *Akutawa muzi.* The word *kutawa* may also mean to build. Yao houses are built by binding poles together with ropes and then filling the gaps with mud.

[342]

2: Mitchell E-5 (1946-1949) 1956 FT7 Yao FT7

the significance of this formulation of his position is clear. It is when he shows partiality that the village under him is likely to break up. If he sides with his children his matrilineal kin are almost sure to move out; if he sides with his matrilineal kin, his children are likely either to return to their matrilineal village or, if they are adult, split off to set up a village of their own. The situation is precarious for the headman and it is very difficult for him to avoid a split in the village if he cannot keep the two opposed groups at peace.

My investigations show that few villages have contained patrilaterally-linked groups through the lives of two village headmen, unless these groups were descended from slaves. When the headman dies his successor assumes his name and social rôle. He also assumes the position of father towards the remaining children, who are in fact his cross-cousins. But his relationship towards them is not the same as that of father to children. The intimate link of the blood tie has been lost and the relationship becomes formalized. As more and more headmen succeed the genealogical link between the patrilaterally-linked groups and the dominant matrilineage becomes more and more remote, and the relationship becomes more and more casual. What usually happens is that shortly after the death of the headman and father, the patrilaterally-linked group takes exception to what the new headman does or says and moves off to found a village of its own. The case history I quoted earlier [1] brought this out clearly. The new headman had had intercourse with the wives of his 'son'. The son complained to the arbitrators in the dispute that 'he should have been as a father to me, and he is not'. The result was that the son refused compensation, and moved out of the village with his sisters to build on his own. When this happens the father-son relationship between the two villages is preserved and perpetuated, but the link is entirely formal and co-operation between them is limited to mutual attendance at funerals.

Patrilaterally-linked Groups as the Legacy of Slavery

Slave-groups in a village are usually linked patrilaterally to the dominant lineage. This is because the headman who was usually the captor of the slaves kept the women as concubines. They were given quasi-child status in the village, so that their children

[1] 'The Split of Cikumba Village', see Chap. V, p. 127.

2: Mitchell E-5 (1946-1949) 1956 FT7 Yao FT7

567 613 621 were called *yisikulu* (grandchildren) by the headman, who in turn was called *ambuje* (grandparent or master) by the slaves. The grandchild–grandparent relationship became fused with the master–slave relationship as the use of the term *ambuje* for master suggests. The slave descendants as a rule have no relatives in the neighbourhood. The Yao always redeemed uterine kin whom they found in slavery by replacing them with other slaves, usually taken or bought from the Nyanja, Ngoni or Bisa. Where there are slave-groups in a village to-day, they have frequently been bought or captured in distant places, so that their kinsmen have been unable to trace them. How much this

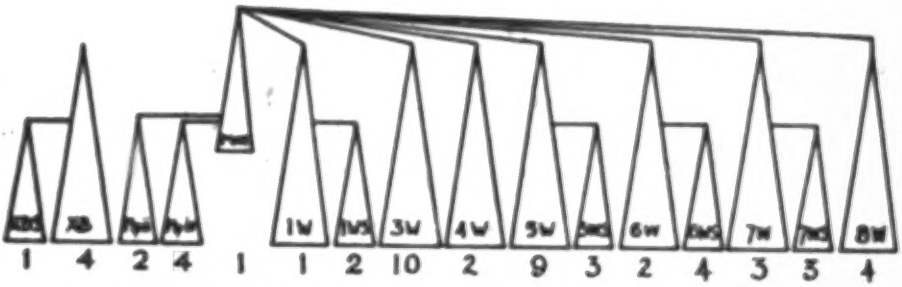

Diagram 5. The Ownership of Huts in Mpumbe Village.

has prevented slave-groups from leaving Yao villages I cannot say. Certainly before the White conquest members of a slave-group could only leave their captor's village at the risk of death. But after the White conquest it seems that many of the slave-groups left to set up their own villages. Many, on the other hand, no doubt for personal reasons, stayed with their captors in their villages, and are there to-day. In Cikoja's village, for example, there are six of these groups. Some are not very large, but only 20 of the 46 huts are owned by members of the dominant matrilineage who are not married to descendants of slaves. Eight are owned by members of the dominant matrilineage who have married slave descendants, and the remainder, 18 huts, are owned by members of the slave-groups who have married outsiders. This is a typical distribution of hut ownership. At one extreme is the pure matrilineal village such as Ali Kasunka's and at the other is the village in which the dominant lineage is barely represented. A village of this type was Mpumbe

2: Mitchell E-5 (1946-1949) 1956 FT7 Yao FT7

when I visited it in 1947.[1] The basic structure of this village is set out in Diagram 5. Here the headman[2] was the last surviving member of the dominant matrilineage. The founder of the village, his mother's brother, had thirteen slave concubines. Some of these were barren but others produced children to give this complex structure. In this village the 55 huts were arranged in 16 different affiliations. The details are set out in Table XXIX. These groups were held together by Mpumbe IV, old, blind and doddering as he was. The virtual leader of the village was his elder brother's son, a man in his late forties or early fifties. When Mpumbe died, late in 1948, the people said that it was because of the sorcery of his brother's son who wished to take over the name of the village. This led to a dispute, which ended in the brother's son's leaving to found a new village about 15 miles away. A distant sister's son, as I have said, succeeded to the headmanship, and the reduced village was reunited under this new leader. 567 613 621

However, this is an extremely unusual type of village as most villages, if they are not simple matrilineal groups, have only one patrilaterally-linked group living with them. The reasons for this are firstly, that if patrilaterally-linked matrilineages develop at all in the modern villages, they move out very soon after the death of their progenitor, and, secondly, that there are very few of the old slave-raiders' villages left intact.

Cross-cousin and Other Kinds of Intra-village Marriages 582

A most important factor in the welding of patrilaterally-linked groups to the dominant matrilineage is marriage. The tradition of cross-cousin marriage is very strong among the Yao. A person may marry either type of cross-cousin but in practice preference is given to a father's sister's daughter—i.e. the woman is married to her mother's brother's son. There is a special term for cross-cousins, *atiwani*, which is used by either male or female talking to either sex. Between cross-cousins, especially cross-sexually, there is a joking-relationship which may vary all the way from ribald joking to sexual advances. Some of my male informants say that sexual intercourse may take place between cross-cousins 601 605

[1] See also Chap. VI, p. 161, and Chap. III, p. 59.

[2] He died late in 1948 and was succeeded by a distant 'sister's son' from the village of his perpetual son, Ngongondo.

[text continues on p. 199]

2: Mitchell E-5 (1946-1949) 1956 FT7 Yao FT7

613
621

TABLE XXIX

OWNERSHIP OF HUTS IN MPUMBE VILLAGE

Affiliation of women:	*Affiliation of men:* Mat.	IW	IWS	3W	4W	5W	5WS	6W	6WS	7W	7WS	8W	Mpii	Mpiv	XB	XBS	Out.	Div.	Wid.	Total
Mat.	–	–	–	–	–	–	–	–	–	–	–	–	–	–	–	–	–	–	–	–
IW	–	–	–	–	–	–	–	–	–	–	–	–	–	–	–	–	1	–	–	1
IWS	–	–	–	–	–	–	–	–	–	–	–	–	–	–	–	–	1	1	–	2
3W	–	–	–	–	–	1	–	–	–	–	–	–	–	–	1	–	4	–	1	7
4W	–	–	–	–	–	–	–	–	–	–	–	–	–	–	–	–	–	–	–	–
5W	–	–	–	1	–	–	–	–	–	–	–	–	–	–	–	–	5	–	2	8
5WS	–	–	–	–	–	–	–	–	–	–	–	–	–	–	–	–	2	1	–	3
6W	–	–	–	–	–	–	–	–	–	–	–	–	–	–	–	–	1	–	–	1
6WS	–	–	–	–	–	–	–	–	–	–	–	–	–	–	–	–	2	–	–	2
7W	–	–	–	–	–	–	–	–	–	–	–	–	–	–	–	–	–	–	–	–
7WS	–	–	–	1	–	–	–	–	–	–	–	–	–	–	–	–	3	–	–	4
8W	–	–	–	–	–	–	–	–	–	–	–	–	–	–	–	–	1	–	1	2
Mpii	–	–	–	–	2	–	–	–	–	–	–	–	–	–	–	–	–	1	1	4
Mpiv	1	–	–	–	–	–	–	–	–	–	–	–	–	–	–	–	3	–	1	5
XB	–	–	1	–	–	–	–	–	–	–	–	1	–	–	–	–	–	3	–	5
XBS	–	–	–	1	–	–	–	–	–	–	–	–	–	–	–	–	–	–	–	1
Out.	–	–	–	–	–	2	–	1	2	3	–	1	–	–	–	1	–	–	–	10
Div.	–	–	–	–	–	–	–	–	–	–	–	–	–	–	–	–	–	–	–	–
Wid.	–	–	–	–	–	–	–	–	–	–	–	–	–	–	–	–	–	–	–	–
Total	1	–	1	3	2	3	–	1	2	3	–	2	–	–	1	1	23	6	6	55

Notes. This table is on the same principle as Table XXVII. Here IW stands for the matrilineal descendants of Mpumbe I's first wife, 2WS for the matrilineal descendants of his second wife's son. Mpii stands for the matrilineal descendants of Mpumbe II's wife, and of course if she is alive she is included in the group. XB are the descendants of a classificatory brother of Mpumbe I. I am uncertain of his exact genealogical relationship to Mpumbe I. There are two huts not in this table. Hut 23 is occupied by Mpumbe II's late daughter's husband. Instead of moving back to his matrilineal village, this man has brought another woman into Mpumbe's. Hut 16 is occupied by the widow of Capola (Mpumbe I's ZS) and she has had no children.

In a village as complex as this the classification of the ownership of huts becomes arbitrary. Because of the amount of intermarriage between the component lineages most individuals can trace their descent from Mpumbe I by two or three lines. Here I have classified people into lineages by matrilineal descent as the first criterion. I have classified them into groups after that by one patrilateral link rather than by two, etc.

2: Mitchell E-5 (1946-1949) 1956 FT7 Yao FT7

'if the women are stupid enough to allow it'. The kinship terminology is consistent with the assumption that every man marries his cross-cousin, except that the father's sister's husband is not called 'father-in-law', but 'father'. The mother's brother's wife is called *akwegwe* (parent-in-law). The husband of a cross-cousin is called *mpwao* (younger brother), on the reasoning that if a man does not marry his cross-cousin, then his younger brother will. Dr. Meredith Sanderson told me that it was once the custom for a man to ask a prospective wife's cross-cousin before he proposed marriage because it was assumed that the woman's cross-cousin had first right to her hand. As far as I could ascertain this politeness is no longer observed.

The children of cross-cousins are called 'my children'. In addition to this a person calls his mother's mother's brother's son or mother's father's sister's son, 'father', and his mother's mother's brother's daughter or mother's father's sister's daughter, 'female father', a term which he applies also to his father's sister.

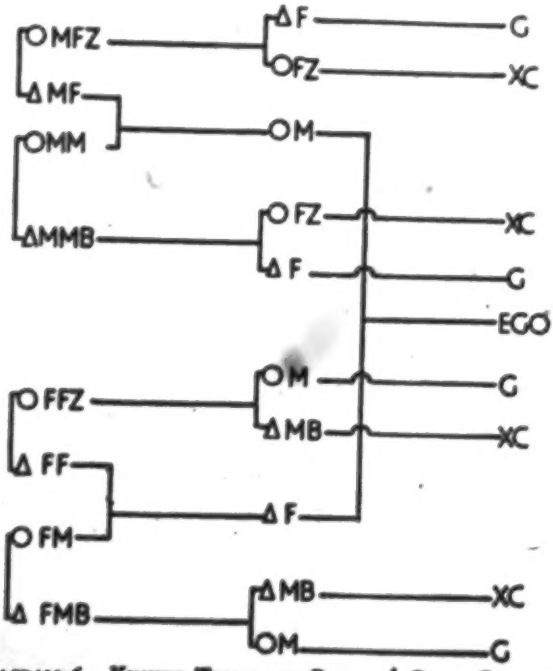

DIAGRAM 6. KINSHIP TERMS FOR PARENTS' CROSS-COUSINS.

601 A person calls his father's mother's brother's daughter and father's
605 father's sister's daughter, 'mother'; his father's mother's brother's son or his father's father's sister's son, 'mother's brother'. Diagram 6 illustrates this. This is consistent with the assumption that each parent has married his cross-cousin.

582 Conversation with informants gives the impression that cross-cousin marriages are very common. They say, for example, that every man's first marriage ought to be to his cross-cousin. But in fact, of 103 first marriages, only 15 per cent were to real or classificatory cross-cousins, though 21 per cent were to other types of kinsmen. Marriages to other types of kinsmen are loosely called cross-cousin marriages, and often what has been called a cross-cousin marriage in conversation turns out to be marriage to a cross-cousin's daughter or something similar. This may be the reason why casual conversation leads one to imagine that cross-cousin marriage is so frequent.

601 But cross-cousinship is particularly significant when seen in
605 relation to village structure. Typically, villages, if they are not
613 built around a simple matrilineage, are composed of a dominant matrilineage and one or more lineages linked patrilaterally to it. Sometimes there are groups in a village which are connected by a patrilateral link to a matrilineage which is in turn linked patrilaterally to the dominant lineage. In other words, there are some lineages connected by a double patrilateral link to the dominant lineage. But this is not common. These linked groups have arisen because one or more of the men of the dominant lineage have brought their wives to live in their village. The set of kinship terms applied to members of the linked lineage by members of the dominant lineage are shown in Diagram 7. We have already seen that Ego, whether man or woman, calls his or her mother's mother's brother's son or daughter 'father' or 'female father'. This usage is consistent with the assumption that one's mother ought to have married her mother's brother's son so that the mother's maternal uncle's son should be called 'father'. On the same reasoning, one's mother's mother's brother's daughter should be one's father's sister and the appropriate term 'female father' is accordingly applied. Because uxorilocal marriage is the custom, Ego's mother's mother's brother's son marries out of the village and his children belong to another lineage. The children of Ego's mother's mother's

2: Mitchell E-5 (1946-1949) 1956 FT7 Yao FT7

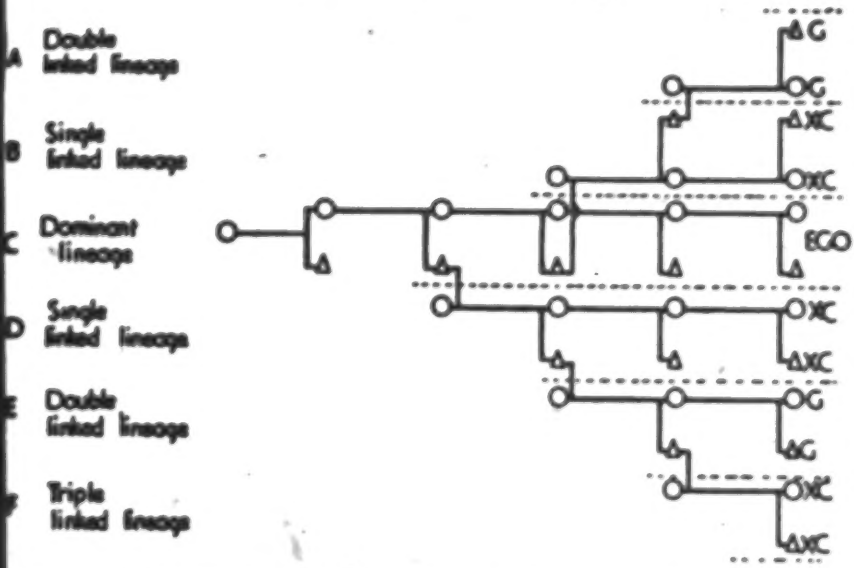

DIAGRAM 7. KINSHIP TERMS BETWEEN DOMINANT LINEAGE AND PATRILATERALLY-LINKED GROUPS.

brother's daughter, however, are members of the linked lineage and they are called 'cross-cousin' by Ego and members of the dominant lineage in Ego's generation. The children of 'cross-cousins' are called 'my children'. Hence, Ego and those in his generation in the dominant lineage call all those in the first descending generation in the linked lineage 'my children'.

I have used as an example a lineage which is linked to Ego's lineage through his mother's mother's brother. But the kinship terminology is unaltered if the link occurs in any ascending generation. In Diagram 7 I have set out the kinship terms applied by the dominant lineage to members in the linked lineage where the connection is through Ego's mother's mother's mother's brother.

The argument would run as follows:

	Ego's	MM	calls Ego's MMMBD cross-cousin.
Therefore	Ego's	M	calls Ego's MMMBD female father;
therefore	Ego's	M	calls Ego's MMMBDD cross-cousin;
therefore	Ego		calls Ego's MMMBDD female father;
therefore	Ego		calls Ego's MMMBDDD cross-cousin.

2: Mitchell E-5 (1946-1949) 1956 FT7 Yao FT7

601 To Ego therefore, in a lineage linked through one patrilateral link:

605 Any person in the first ascending generation is 'father' or
613 'female father'.

Any person in the same generation is 'cross-cousin'.

Any person in the first descending generation is 'child'.

Those in the second ascending generation are called 'grandparent' and those in the second descending generation are called 'grandchildren'. By the merging of alternate generations, those in the second ascending and second descending generation may also be called 'cross-cousin'.

Where the subsidiary lineage is connected to the dominant lineage through two patrilateral links the kinship terms for siblings is applied to Ego's generation. In Diagram 7 the linked lineage marked A is connected to the dominant lineage through Ego's MMBS. Ego calls his mother's mother's brother's son 'father' and, therefore, calls his mother's mother's brother's sons' children by the appropriate sibling terms.

If a subsidiary lineage were connected through three patrilateral links the kinship nomenclature would be the same as if there were only one link. Lineages connected to dominant lineages through two or more patrilateral links are very rare. Most subsidiary lineages are connected through one patrilateral link only. In any village the generation differences between members of dominant and subsidiary lineages tend to be obscured. The Yao tend to see the component lineages as wholes, and therefore speak of the relationships between members of the dominant lineage and members of the subsidiary lineages in general as 'cross-cousinship' (*cisuwani*). It is only in special situations that the exact relationship becomes important.

605 The pattern of behaviour between cross-cousins is consistent
578 with this view of their rôles in the make-up of a village. In the
621 typical Yao village there are two or three groups who are united in their extra-village affairs but opposed in internal relationships. Their hostility to each other comes to the surface at the slightest provocation, but they are, nevertheless, co-villagers. They are kin and yet not kin, because the Yao look upon kinship as primarily matrilineal. They talk of the link through the father as 'not proper kinship'. The hostility between the members of the different cross-cousin groups in the village is dissipated

2: Mitchell E-5 (1946-1949) 1956 FT7 Yao FT7

in a joking-relationship which is more intense between men and women. Men and women in Yao public life always behave distantly to each other; hence joking-relationships are most intense between male and female cross-cousins. The joking-relationships between cross-cousins of the same sex is much more subdued and limited. The village headman himself, if he is not the actual father of the cross-cousins, is likely to be the butt of most of this. His visits to the huts of his cross-cousins to give them irksome instructions is an especial occasion for this sort of joking. Cikoja ordered his female cross-cousins to sweep a site for my tent when I first went to his village. I was most embarrassed by the insults that were hurled at his head during this procedure, but he took it all calmly and said nothing. The hostility inherent in the headman–villager relationship, together with the opposition between the dominant matrilineage and the patrilaterally-linked groups, provided an opportunity *par excellence* for joking. Thus the joking between cross-cousins in the village context is a means whereby the hostility between the component groups is dissipated and the harmony within the village maintained.

The groups are, of course, welded more closely by cross-cousin marriages which are not only allowed but prescribed. By cross-cousin marriage a man from one of the component groups of the village may marry and yet not leave the village. He may in fact have to build a hut in another part of the village, but this is obviously not the separation that uxorilocal marriage entails. At the same time, in a village where the headmen have married their cross-cousins, there will be fewer patrilaterally-linked groups, so that the village will be less complex and consequently less liable to internal dissension. If cross-cousin marriages were not practised, and if the children of the headmen and senior members of the linked lineages did not return to their matrilineal villages on the death of one of their parents, the intra-village situation could in time become extremely complex. Assuming that each linked group had at least one male member married virilocally, the number of related groups would double itself in each generation.[1] However, because of limiting economic factors I describe later and the disruptive social processes within villages, this situation never occurs in practice, and Yao villages on the whole remain relatively simple in structure.

[1] See detailed argument and diagram in *Seven Tribes*, 333.

2: Mitchell E-5 (1946-1949) 1956 FT7 Yao FT7

Other Types of Village Structure

621 Linked groups in most villages are connected by patrilateral
571 ties, but other kinsmen, or even unrelated persons, are also found in villages. I have been describing essentially the organization of groups. Some kinsmen do in fact come to live in villages because of personal links to the headman or some other villager. If a man or woman does this, he or she usually has a single hut which is placed close to his or her kinsman. If the person lives in the village long enough a related group may grow up around him or her, and when the children reach adulthood this group will become internally organized and corporate in its dealings with the other groups in the village. But this seldom happens, because the ties to the resident kinsman are usually too weak to hold the children, or the causes which drove the founder of the new group out of his or her original village have disappeared. Children may leave a village with their mother because she was accused of being a sorceress, and go to live in the village where her brother is married. When she dies, or the incident is forgotten, they may go back to their matrilineal village. For example, Bt. Mkwinda of Cikoja village ran away with her husband after her child was supposed to have been bewitched by her mother. But her children, as they grew up, came back to marry in the village of origin, or at least to contract marriages near it. In Chiwalo's, Nyambi's and Kawinga's areas, where I have recorded most genealogies of villages, I found few people who were neither matrilineal- nor patrilaterally-linked relatives. In Malemia area, which is nearer Zomba, the situation was
621 somewhat different. The dominant matrilineage- and patrilater-
571 ally-linked groups of the typical Yao village were still quite easily
361 discernible. But there were other related and unrelated groups and huts in the villages. An example of this is Citenjele village,[1] on the north boundary of Malemia's area. There the main village contained the following huts:

Dominant matrilineage	22
Groups linked through present headman	5
Hut linked through present headman's brother	1
Groups linked through previous headman	5
Groups linked through previous headman's brother	4
	37 huts

[1] See also 'An Outline of the Social Structure of Malemia Area', 36–40.

2: Mitchell E-5 (1946-1949) 1956 FT7 Yao FT7

About 250 yards to the north-west is a single hut belonging to the sister of the husband of one of the present headman's daughters. In the middle of the group on the road is a single hut of a woman who has no connections in the village at all. Her husband works in a mission garden about a mile away. About 100 yards from the north-east edge of the main block is a group of 4 huts which are unrelated to Citenjele, but which had joined him about 25 years ago before he had moved into Malemia area. About 250 yards farther to the north-east there are 2 huts owned by the daughters of the sister of the wife of a man who had married one of the female members of the dominant matrilineage. Due east about half a mile away, there is a group of 6 huts which are owned by Yao. These are unrelated groups and are under Citenjele as Administrative Village Headman, but they are for all intents and purposes separate villages.

There are other types of villages. For example, in Namwera area I found a village composed of a number of unrelated sections. The huts of each could quite easily be distinguished from those of other sections though they were built very close to each other in some parts of the village. Each section was built up on exactly the same pattern as other Yao villages—that is, there was a dominant matrilineage and sometimes some patrilaterally-linked huts. Each section had its own leader who concerned himself with its internal affairs. He, nevertheless, recognized the authority in general of a village headman, who lived in one of the sections of the village. He was the Administrative Headman for the village and he was the first to come into the area. All the other sections had had to ask him for land when they had moved into the area. His authority was confined to his duties as Administrative Headman though he was much respected and the sections called him in regularly as an arbitrator in their affairs. But if the chief called all village headmen to the court, the leaders of the various sections went as well, so that he was not in fact their representative to outside authority in all situations. The relationships between the various sections, therefore, were very much like those between village headmen in Kawinga's area. The only difference seemed to be the amount of physical concentration of the huts.

I tried to find out why these sections lived so close to one another. My informants told me that there were many men away at labour centres and it was necessary to build the huts

2: Mitchell E-5 (1946-1949) 1956 FT7 Yao FT7

361
342
351

(*a*) Part of a village in Namwera area. The distinct group of huts on the right is not related to those in the left-hand corner, but is only one section of the village.

(October 1948)

(*b*) A slightly different view of the same part of the village. The fence encloses the grainbin, kitchen and latrine.

(October 1948)

PLATE IX

[facing p. 206]

2: Mitchell E-5 (1946-1949) 1956 FT7 Yao FT7

621 close together so that the few men left in the village could protect
571 the village against man-eating lions. This is certainly an area
361 where man-eating lions are common and kill people every year. It is true also that man-eating lions have ceased their depredations in Kawinga and Nyambi areas. But I also found a similar type of village in Malemia area.[1] Here the explanation was that the villages had been made to live together by the Administration under the 1912 Ordinance. But the Ordinance was applied to the whole district, yet there are not many of these villages.

The relationships between the section leaders and the village headman are exactly the same as those between independent headmen farther south. The difference in the villages is the degree of physical concentration of the huts; which brings up for review the concept of 'the village'. I have defined the village as a discrete cluster of huts occupied by a group of kinsmen[2] and hinted that the huts were not always clearly separated from neighbouring huts. In fact the Yao word for village, *musi*, may be applied to social groups of different orders. I have already mentioned that different sections of a village may be scattered in discrete groups. The term *kamusi* (diminutive) or even *musi* may be applied to any of these clusters of huts in a situation where the larger kinship section is not involved. A man may tell his friend that he has bought some maize at Meni's village. He means that he bought the maize at the group of huts under Meni in Majaja village. In a court case, however, he would say that he had married a woman in Majaja village even though he were referring to the daughter of Meni.

621 The expanded village—i.e. the groups of kinsmen who recog-
571 nize the leadership of one man, but whose huts are relatively distantly spaced in discrete clusters—may give a stamp to the social organization in a small area of, say, a square mile or two. The dominant matrilineage of the senior headman and his patrilaterally-linked groups may all live in this area in physically separate groups, but their kinship is still dominant and they are for ritual purposes still 'of one fire'. In time any of these groups may move off and be replaced by complete strangers. The senior headman still retains his position of authority over the

[1] Ngalango village. It is described in 'An Outline of the Social Structure of Malemia Area', 35-6.

[2] Chap. I, p. 3, and Chap. V, p. 110 f.

2: Mitchell E-5 (1946-1949) 1956 FT7 Yao FT7

strangers. Meantime, the seceding group moves into some other village area at a distant place, where they are strangers themselves. The result is that kinship soon ceases to be the organizing principle in local areas, and the principle of primacy takes its place. Hence, primary[1] kinship provides the principle on which the relationships among village headmen, and therefore villages, may be organized in a local area, for only a relatively short time. Before long, for a variety of reasons, the smaller villages move away and their sites are taken by others. 621 571

Primary matrilineal kinship on the other hand retains its significance as the means whereby relationships are organized within villages. In other words, outside the lineages of the ruling families it is very difficult to record a genealogy which does more than link the component parts of a village. Beyond this genealogies are socially insignificant. Therefore, since villages are continually breaking up, genealogies are usually shallow. Once a group has broken away to found a new village, its exact genealogical link with the parent village tends to be forgotten and replaced by a formalized link of perpetual kinship between the two village headmen.

Yao society, therefore, is not 'organic' in the way that Fortes describes Tallensi society: it is not 'governed by the same principles at all levels and in every sector of the social structure'.[2] Instead different principles of organization apply at different levels of Yao society. Thus the shallow lineages that form the cores of villages are internally segmented. Villages are composed of matrilineages linked to each other usually through patrilateral ties, ties which are initially primary but become perpetual. Chiefdoms, on the other hand, may be seen as organizations of villages ranked in relation to each other and to the chief in terms of their perpetual kinship links, their antecedents, and their strength of following. 621 571 613 [631]

The same groups of matrilineal kinsmen may interact in three different fields of social relationships. Firstly, they may form a segment within a matrilineage. Secondly, they may form a group in a village linked initially by a primary and later by a perpetual patrilateral tie to the headman. Thirdly, if they

[1] i.e. kinship that can actually be traced as against 'putative' or 'perpetual' kinship.

[2] Fortes, *The Web of Kinship*, 342.

2: Mitchell E-5 (1946-1949) 1956 FT7 Yao FT7

621 should break away to found a new village they may become a
571 Newcomer and relatively junior hamlet in political relationships with other villages in a local area of a chiefdom.

613 The group of kinsmen in each situation exhibits different degrees of corporate identity. As part of a lineage the identity of the group, except in unusual circumstances, is merged in the identity of the lineage. As part of a village the identity of the group appears clearly enough in intra-village affairs, but is merged in the identity of the village otherwise. It is only when the group can set-up as a village of its own that its identity is finally established, that is, when the group becomes fully autonomous.

The identity of a group of matrilineal kinsmen therefore varies with the extent to which matrilineal ties with other kinsmen are attenuated. They can emphasize their independence of their kinsmen by playing down the link between them. A linked lineage in a village emphasizes its *patrilateral* link with the dominant lineage and so maintains its identity within its village of residence. The members do not consider themselves a part of a matrilineage which is dominant in some other village. By the same process a newly-founded hamlet does not emphasize its detailed and intimate links with its parent village, but tends to subsume these into a formal, perpetual relationship between the respective village headmen.

In Yao society, therefore, we may distinguish three orders or levels of social grouping:

1. The matrilineage which consists of ranked lineage segments.
2. The village which consists of ranked matrilineages.
3. The chiefdom which consists of ranked villages.

It is only at the most fundamental of these levels, i.e. within the matrilineage, that matrilineal descent provides a principle for organizing group relations. At the next level, i.e. within the village, matrilineal kinship gives way to other types of primary kinship between key personalities in the structure. At the third level, i.e. within the chiefdom, kinship appears only in the form of the highly formalized 'perpetual' kinship—the actual links may well have been forgotten long ago. The same kinship term may be applied between personalities at all three levels of organization, but the content of the term changes according to the field of interaction.

2: Mitchell E-5 (1946-1949) 1956 FT7 Yao FT7

CHAPTER VIII

THE VILLAGE THROUGH TIME

IN order to present my analysis of the internal structure of Yao villages and of the position of the village in the social structure as a whole, I have given static pictures of villages at particular moments of time. But it should be clear that this description of the enduring social relationships, which appear as a static social structure, is abstracted from a series of on-going processes in which certain social relationships appear as repetitive elements. 621

In reality villages are constantly changing. Their personnel is replaced, their internal lineage composition changes, and they change their sites from chiefdom to chiefdom. It is perhaps easiest to visualize these changes, and the way they affect the structure, by viewing them in terms of the slow ontogenetic development of villages. Villages pass through a cycle which leads from their incepeion, through internal differentiation out of a larger group, to final break-up through their own differentiation, and the resumption of their original simple form.

Let us consider the typical life history of a hamlet which has just moved into a particular area. It is composed of four or five huts belonging to the daughters of one woman. The mother herself may be alive, as an old woman and very probably a widow. The daughters are adults and have with them their husbands and children. The hamlet settles down to its life in its new area. The warden of this sorority-group probably lives some miles away and the women have to send the older children to call him when they need his help. As the daughters of the [591] women grow up, young men come to marry them. Each couple may start to live in the girl's mother's kitchen at the back of the hut. In time the husband builds a hut next door to the hut of his mother-in-law. Yao huts as a rule are made from [342] pole and daub and they last from five to ten years. White ants eat the poles away and the thatch always leaks a little in very wet weather. The winds and the rains erode away the plaster.

2: Mitchell E-5 (1946-1949) 1956 FT7 Yao FT7

621 When a villager died in pre-White days, the hut and personal effects were destroyed. Nowadays, with the improving type of [768] dwelling, which frequently includes well-timbered doors and glass-windows, huts are treated with medicine to cleanse them of the harmful effects of the death and they are used again. But [356] all houses must be repaired continually if they are to remain habitable. Eventually most houses fall beyond repair and new houses must be built. The women pull the poles out of the ground and use them for firewood and the site is planted with pumpkins or maize by the nearest relative.[1] A new hut site is then chosen according to the wishes of the owners. As a rule outsiders are neutral about this, and a village member selects a site in accordance with his or her social position in the village. The women still stay near their mother, but they may build on the outside fringe of a group of huts. When the mother's house collapses she may in turn build her hut on the outside fringe of the group near her daughter's hut. In this way the spatial distribution of the huts gradually comes to reflect the segmentation of the lineage.

621 As the woman's daughter's children grow up and marry, the woman's son persuades his wife's relatives to allow him to take 591 his wife to live in his home village. If he is a polygynist he usually takes the senior wife, but he may take the other or others as well. His own daughters now marry uxorilocally in the village if their mother is still alive. If the parents live long enough their daughter's daughters in turn marry and build their huts there. A crisis comes when either the man or his wife dies. The children have to decide whether to stay where they are or to move back to their own matrilineal village. If they do stay at their father's village they form the nucleus of a patrilaterally-linked group. As they grow older the senior male of their matrilineage may come to live with them. Through the years while this internal differentiation is developing within the village, the huts are decaying and being rebuilt. While new hut sites are being selected the physical form of the village is reflecting the continuing social differentiation.

621 At the same time gardens are being planted and crops reaped each year. The soil in the first garden sites has probably been 361 depleted already and is either lying fallow or is under cassava.

166

[1] Usually the name-heir of a woman, i.e. her daughter's daughter.

2: Mitchell E-5 (1946-1949) 1956 FT7 Yao FT7

As garden land becomes scarcer, members of the village have probably approached patrilateral or affinal kinsmen in other villages for personal grants of land. The lands immediately surrounding the village have long since become depleted and crops will only thrive on lands some miles away; then the village moves its site. How long it will be before this becomes necessary, depends on the fertility of the soil. Most villages must move eventually. When they do they may move a few hundred yards only, or on the other hand, they may select a site thirty to forty miles away. Whether the site is far or near, the migration is not a mass movement of the village as I have so far assumed for the purposes of analysis. As a rule a few villagers, including the headman, move first. The headman may be there a year or more before the second lot of villagers move. They usually move in sorority-groups so that when they build at the new site they place their huts in sections. Thus, the internal social organization of the village is reflected in the same way as before. The whole move may take three or four years before it is completed.

This process of development of the village and its gradual and continual reformation is sometimes hastened by the conflicts that appear within it. I have from time to time mentioned various conflicts that have led to the split of a village and the subsequent migration of one of its sections. The new section sets up a small hamlet in a distant locality, especially if the reason for its secession was sorcery. Here the general process of evolution is started anew. Its parent village, however, is strengthened by the migration since the dissident elements have left it. It continues to carry on its existence and to throw off other villages from time to time.

The number of villages, in the area I studied, is increasing with the increase of population, but the average size of each village remains constant and appears to have done so for many years.[1] But at the same time some villages as entities are disappearing while new ones are being formed. A few new villages become resorbed by their parent villages when for some reason they cannot continue their separate existence. Other villages fragment and do not split. The individual village members leave the village and go their separate ways. Very frequently when

[1] See the segments in Chap. II, p. 40.

2: Mitchell E-5 (1946-1949) 1956 FT7 Yao FT7

621 this happens the husbands take their wives to their several villages with them.

Throughout this general process the links between groups of any particular area are constantly changing but the general pattern remains constant. A village expands outwards, and the various patrilaterally-linked groups, and often some of the segments of the dominant lineage, form hamlets separate from each other. The dominance of one of the local headmen over the others is still recognized and the general pattern of primacy is maintained. Some of the earliest villages in the area remain intact through many years. Villages which were small hamlets twenty or thirty years ago, when they had just moved into the area, have become relatively senior. Many headmen who were senior then have moved, or their villages have disintegrated, or ceased to exist. Other villages have moved in and are ranked lower. Thus through time the rank of any one headman may have changed, but the ranking system and the relationships of senior to junior headmen remain unaltered.

621 The general process is the same for the whole chiefdom,
622 though there is less overall structural change than in smaller
631 areas. The more important a village headman, the less likely is his village to disappear entirely. The most important village headmen, therefore, have long histories of association with the chief. Thus while there is considerable change going on at the lowest levels of the social system, the social structure of the whole chiefdom is remarkably stable. In other words, the rate of change taking place within the structure varies directly with the level of organization within that structure. The names of the *nduna* of Kawinga, Liwonde and Malemia are the same as those of the *nduna* who accompanied these chiefs into Nyasaland in the middle of the nineteenth century. Relatively few of them have disappeared. And so it is with important village headmen. The links between them, fixed by their rank and status relative to each other in perpetual kinship and other ties, form the political structure of the chiefdoms. From chiefdom to chiefdom the same pattern of organization is concealed behind an apparent diversity of actual links.

178 But, as a result of their contact with other peoples and their
622 absorption into the economic and administrative framework of
643 the British Empire, new social relationships are developing

2: Mitchell E-5 (1946-1949) 1956 FT7 Yao FT7

amongst the Yao. The religious sanctions behind tribal initiation ceremonies were weakened when many of the village headmen adopted Islam, and the rights of holding the Islamic equivalents fell to commoners who were leading Moslems. Thus for many village headmen the significance of the holding of initiation rights fell away. The White Administration has introduced new political personalities into the field, such as the court clerk, the court sergeant and other members of the chief's bureaucracy. These persons have been able to acquire peculiar positions of power in competition with the chief's traditional advisers.[1] Some wealthy individuals are able to wear better clothes, build better houses, and have more personal attendants, than the chiefs. For example, there is a carpenter in Kawinga's area living near an Indian store,[2] who is wheeled about in a garetta (ricksha) as the chiefs are, and who dresses far better than any of the chiefs.

But these changes have not yet affected the pattern of social relationships appreciably. Up to the present as new elements were introduced into Yao social structure they have been absorbed in terms of the traditional structure. The traditional chiefs, therefore, became the Principal Headmen when White Administration was imposed on them. Village headmen, no longer able to compete with each other in terms of followers and slaves, now began to vie with each other for 'books'. Important village headmen became the Moslem leaders, and the larger mosques were built at their villages. The chiefs, by virtue of their annuity from the Government, are able to maintain a higher standard of living than most of their subjects: they build burnt-brick houses, they wear finer clothes, they are wheeled about in garettas or, latterly, are pillion passengers on bicycles pedalled by retainers. By using their annuities as capital, they have been able to grow more tobacco than most of their subjects and so still maintain economic ascendancy over them.

So that until 1949, at least, in spite of the introduction of

[1] cf. my 'The Political Organization of the Yao of Southern Nyasaland'.

[2] He does not live in a village as most people do; he is an Nguru, and has none of his relatives near him, which is significant. His relationships with his clients are formal and transitory and he is not bound by traditional kinship ties. He therefore attempts to achieve prestige through conspicuous expenditure.

2: Mitchell E-5 (1946-1949) 1956 FT7 Yao FT7

178 new personalities into Yao society, the social structure remained
622 little altered. There were not enough Government officials, or
643 officials in the chief's bureaucracy, or rich individuals in Yao-
land to be able to represent significant elements in the social structure. In the years 1946–49 Yao social structure was still organized in terms of ranked lineage segments at one level, ranked matrilineal groups at a second, and ranked villages at a third.

2: Mitchell E-5 (1946-1949) 1956 FT7 Yao FT7

APPENDIX A

ECONOMIC DATA

AMOUNT AND VALUE OF TOBACCO BOUGHT IN JALASI-KAWINGA AREAS 1942–49

249
433
435

Year	Growers	Amount in lbs.	Cash Value £	Av. Price per Grower (pence per lb.)	Lbs. per Grower	Cash per Grower £ s. d.
1941/2 .	1055	393,964	6695	4·08	373	6 6 9
1942/3 .	2106	465,477	7044	3·02	221	4 0 0
1943/4 .	1792	464,929	8025	4·15	259	4 8 5
1944/5 .	1246	269,212	3067	2·84	216	2 9 3
1945/6 .	1074	127,237	6471	12·41	119	6 0 6
1946/7 .	918	116,590	4020	8·28	127	4 7 5
1947/8 .	1570	132,832	5035	9·18	85	3 4 3
1948/9 .	1315	171,865	5206	9·60	130	4 0 0

AGRICULTURAL PRODUCE BOUGHT IN KAWINGA-JALASI AREAS AT NAMWERA, LIWONDE, MLOMBA, NTAJA, NYAMBI, AND MASUKU MARKETS. AVERAGE FOR THE YEARS 1945–47 INCLUSIVE

241
433
435

(in 1000 lb.)

Year	Maize	Groundnuts	Rice	Beans
1945	23·6	1395	94·0	31·0
1946	101·4	1268	60·4	34·6
1947	nil	1465	122·8	2·8
Total	125·0	4128	277·2	68·4
Average . . .	41·6	1376·1	92·4	22·8

LIVESTOCK CENSUS IN KAWINGA-JALASI AREAS, 1947
(Jalasi, Kawinga, Liwonde and Nyambi, and Malemia areas)

231

Goats	Sheep	Pigs	Cattle
4319	2498	4	225*

* Most of these are owned by White settlers.

2: Mitchell E-5 (1946-1949) 1956 FT7 Yao FT7

STOCK HELD AT AN INDIAN-OWNED STORE IN CHOJA VILLAGE, 1948

(Prices where I recorded them)

435 Cloth at 2/- to 4/6 a yard.
443 Blankets at 8/- to 20/- each.
Women's blouses, 6/9 each.
Men's vests.
Shirts and shorts (together 18/-).
Moslem men's caps.
Scarves.
Sewing thread.
Cooking utensils—Pot diam. 6 in., 7/6.
Tin plates, 2/- each.
Hoes, 2/10 to 3/6, according to size.
Salt (1*d.* a cup holding about 4 oz.).
Soap (1*d.* or 2*d.* per tablet, according to size).
Tobacco (1*d.* and 6*d.* a packet).
Cigarettes at 1*d.* a packet of 10.
Tea, 1/6 lb.
Dark glasses.
Ink.
Exercise books.
Playing cards.
Shoe polish.
Shoe whitening.
Pads.
Envelopes.

STOCK CARRIED BY AFRICAN CANTEEN, I.e. SMALL SHOP HOLDER

12 jars of solid brilliantine.
80 cakes of blue soap.
120 cakes of red soap.
100 packets of 10 cigarettes.
100 packets of tobacco.
6 small mirrors.
25 strings of beads.
60 lb. of coarse salt.

APPENDIX B

GENEALOGY, HUT COUNT AND VILLAGE PLAN: ALI KASUNKA VILLAGE

Hut numbers in brackets after the names in the genealogy.
Other symbols: d = dead; mo = married out; lm = labour migrant; u = below age of puberty; k = kitchen.

361
613
621

Hut Ownership

Hut No.	Owner	Gen. Ref.
1	Bt. Kasembe	C5
2	Bt. Ntemula	D19
3	Bt. Ntuwa	D1
4	Alieje	D12
5	Bt. Sale	D15
6	Mwanace	D10
7	Ali Kasunka	C6
8	Mbalasyao	C1
9	Atawile	C7

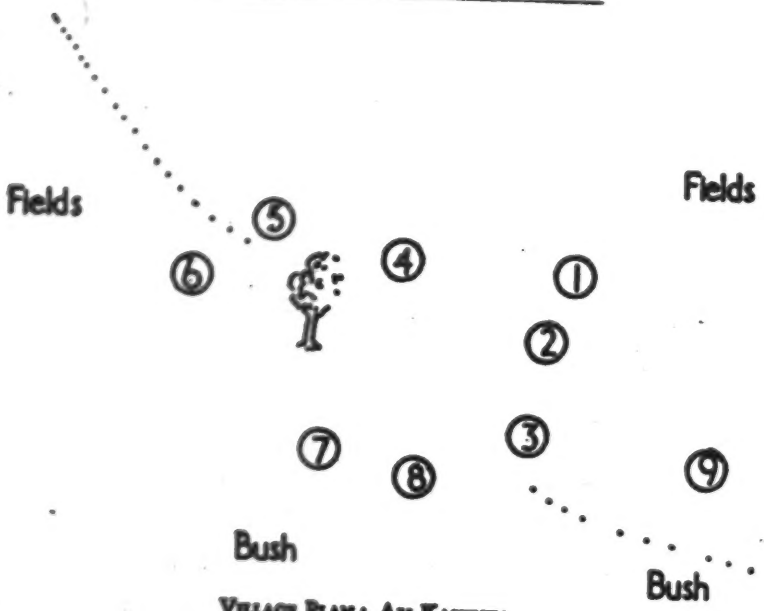

Village Plan: Ali Kasunka
(*Not to Scale*)

APPENDIX C

SKELETON GENEALOGY, HUT COUNT AND VILLAGE PLAN: MENI SECTION OF MAJAJA VILLAGE

Only hut owners are shown in the genealogy.

361
613
621

HUT COUNT

Hut No.	Owner	Gen. Ref.	Hut No.	Owner	Gen. Ref.
1	Meni	B4	19	Bt. Taimu	D6
2	Empty		20	Kitchen to hut 18	
3	Asinjisyeje	C8	21	Bt. Woci	D7
4	Girls' dormitory		22	Ngwaluka	nil
5	Sayisi	D11	23	Bt. Tayali	D5
6	Disused		24	Bt. Saidi	D9
7	Bt. Nyili	D1	25k	Bt. Saidi	D10
8	Bt. Mlungusi	D3	25	Bt. Gwenembe	C4
9	Bt. Duwa	E1	26	Ali Asini	D4
10	Bt. Wemba	D2	27	Boys' dormitory	
11	Aciwanjila	C1	28	Bt. Cinunga	C3
12	Bitiya	B1	29	Bt. Juma	nil
13	Esinati	C6	30	Asausyaga	B2
14	Bt. Mlenje	C5	31	Palinjeje	D8
15	Amina	B3	32	Bt. Majaja	B5
16	Bt. Cibwana	C7	33	Ambulaje	C12
17	Mosque		34	Elbi	C11
18	Cilewi	C2	35	Lusi	C10

The following huts are not included in the genealogy:

Hut 2—Empty.
Hut 4—Girls' dormitory.
Hut 6—Disused.
Hut 17—Mosque.
Hut 20—Kitchen to Hut 18.
Hut 22—Ngwaluka, a non-relative.
Hut 27—Boys' dormitory.
Hut 29—Bt. Juma, a relative of Ngwaluka.

2: Mitchell E-5 (1946-1949) 1956 FT7 Yao FT7

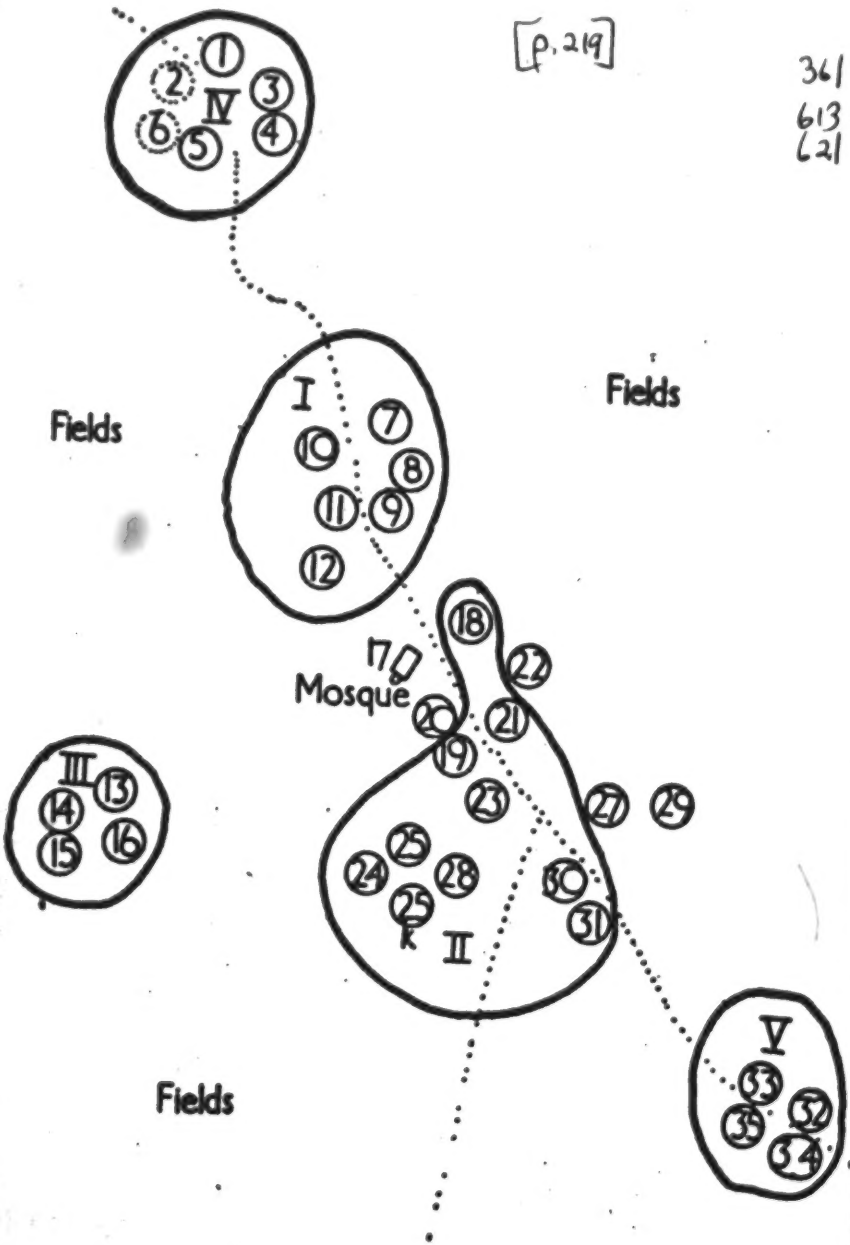

VILLAGE PLAN: MAJAJA
(*Not to Scale*)

2: Mitchell E-5 (1946-1949) 1956 FT7 Yao FT7

APPENDIX D

GENEALOGY AND HUT COUNT: CIKOJA VILLAGE

Hut Count

361
613
621

Hut No.	Wife's name	Gen. Ref.	Name of husband	Gen. Ref.
1	Amaenda	D14	Mbwana	C11
2	Ayesi	E8	Katoli	D33
3	(Boys' dormitory)			
4	Bt. Tepani	F37	Mapila	E52
5	Bt. Beula	E19	(outsider)	
6	Aniya	D15	(outsider)	
7	Bt. Amamu	E14	(outsider)	
8	Alusi	D16	Ali Mkwinda	C13
9	Lunjela	E13	(outsider)	
10	Ajumo	E25	Musa	D7
11	Bt. Mwamadi	G10	Nkatawila	D20
12	Bt. Bwana Isa	F16	(outsider)	
13	Bt. Amisa	E4	(outsider)	
14	Asubiya	E9	(outsider)	
15	Abena	E30	Rajabu	F20
16	Bt. Selemani	D19	(outsider)	
17	Nseweta	E60	Salimu ii	D3
18	Bt. Kacenga	D40	(outsider)	
19	(outsider)		Ali Tepani	E40
20	Alima	D22	(outsider)	
21	Abiya	D23	(divorced)	
22	Kalingule	E38	(outsider)	
23	Akumbiripe	E31	(outsider)	
24	Bt. Ciwina	E33	(outsider)	
25	Bt. Mwenye	C14	(outsider)	
26	Bt. Mwanjele	E55	(outsider)	
27	Alusi	E57	(outsider)	
28	Bt. Cininga	E59	(outsider)	
29	Asidaya	E56	(outsider)	
30	Tuweneje	E54	(outsider)	
31	Bt. Ulanga	D34	(outsider)	
32	Bt. Lilomba	E53	Jauma	F7
33	Bt. Cikwenga	F64	(outsider)	
34	(outsider)		Cilimba	F1
35	Bt. Madi	F10	(outsider)	
36	Bt. Aliya	F11	(outsider)	

2: Mitchell E-5 (1946-1949) 1956 FT7 Yao FT7

HUT COUNT—*continued*

Hut No.	Wife's name	Gen. Ref.	Name of husband	Gen. Ref.
37	Bt. Ntalika	E3	(outsider)	
38	Bt. Kimu	G1	(outsider)	
39	Atawile	E50	(outsider)	
40	Bt. Maperera	D32	(outsider)	
41	(outsider)		Kausi	F3
42	Mege	F28	(outsider)	
43	Bt. Mbwana	F2	(outsider)	
44	Ayuyeje	F29	(outsider)	
45	Kasingati	F30	(outsider)	
46	Asimama	E6	(outsider)	
47	(outsider)		Cikoja VI	E7

361
613
621

Note: The genealogies for Appendices B, C and D have been inserted as folding plates at the end of the book.

2: Mitchell E-5 (1946-1949) 1956 FT7 Yao FT7

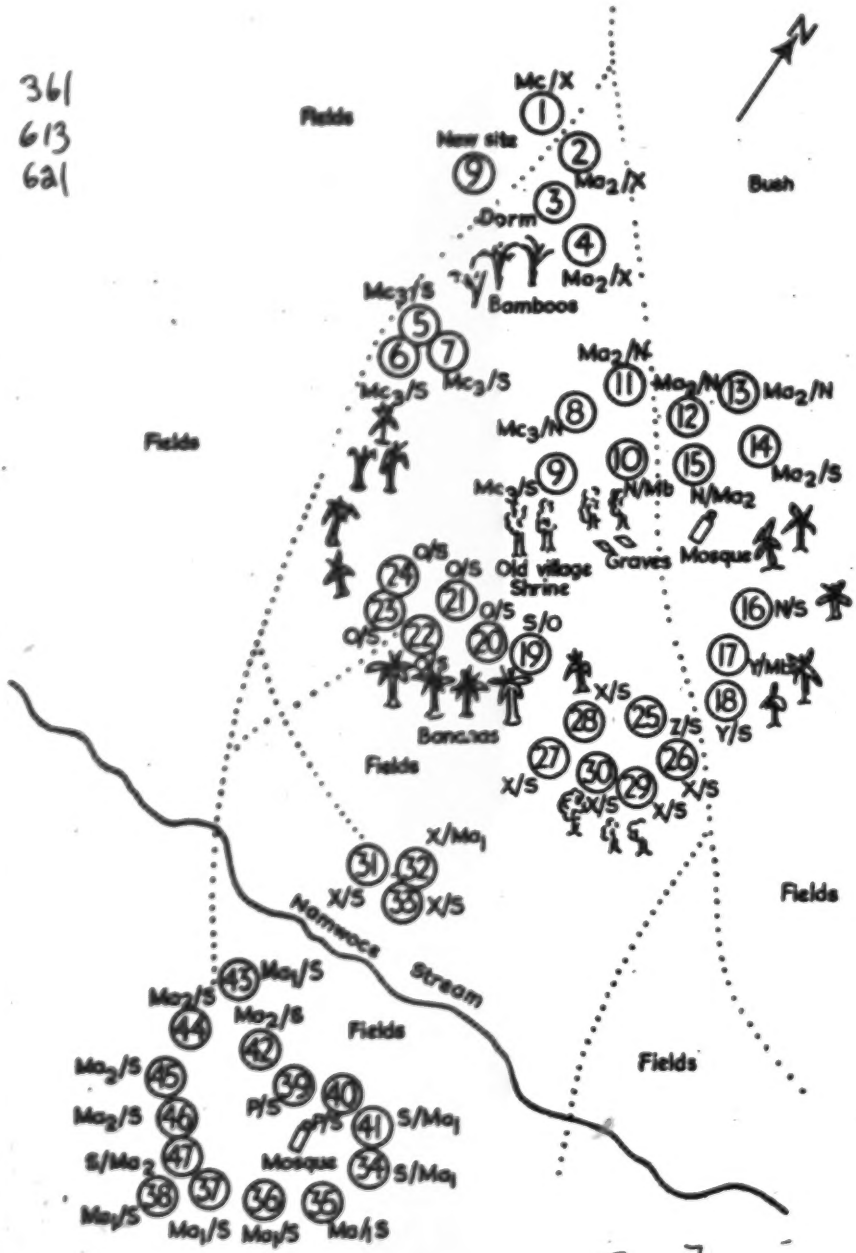

VILLAGE PLAN: CIKOJA
(Not to Scale)

[p.222]

KEY TO CIKOJA VILLAGE PLAN

361
613
621

Ma = Senior segment of dominant matrilineage, i.e. descendants of Ncilaga (C5).

Mb = Second segment of dominant matrilineage, i.e. descendants of Bt. Mkwinda (C6).

Mc = Third segment of dominant matrilineage, i.e. descendants of Lunjela (C8).

Ma_1 = Descendants of Atabiya (D1).

Ma_2 = Descendants of Amaliama (D2).

Mc_1 = Descendants of Amaenda (D14).

Mc_2 = Descendants of Aniya (D15).

Mc_3 = Descendants of Alusi (D16).

N, O, P, X, Y, Z = Patrilaterally-linked lineages.

S = Outsiders.

Mc_1/B = A female descendant of Amaenda married to a man from B patrilaterally-linked lineage.

[p.223]

2: Mitchell E-5 (1946-1949) 1956 FT7 Yao FT7

BIBLIOGRAPHY

A. WORKS OF DIRECT BEARING ON THE YAO OF NYASALAND

113 *Annual Colonial Report, No. 472, British Central African Protectorate, 1904–5.*

Census Report for Nyasaland, 1945, Government Printer (Zomba, 1946).

Correspondence re operations against Slave Traders in British Central Africa, London, H.M.S.O., C. 7925 and 8013 (1896).

Report of the Consul and Acting Commissioner Sharpe on the Trade and General Condition of the British Central African Protectorate for April 1896 to March 31st, 1897. Accounts and Papers. (Africa) No. 5 (1897), C. 8438.

ABDALLAH, YOHANNAH B., *Chilkale cha Wayao*, edited and translated by Sanderson, M., as *The History of the Yaos*, Government Printer (Zomba, 1919).

ABRAHAM, J. C., *Census Report for Nyasaland, 1931*, Government Printer (Zomba, 1931).

BUCHANAN, J., *The Shire Highlands*, Blackwoods (London, 1885).

BURTON, SIR R. F., *The Lands of Cazembe: Lacerda's Journey to Cazembe in 1798*, translated and annotated by J. Murray (London, 1873).

CARDEW, C. A., 'Nyasaland in 1894–5', *The Nyasaland Journal*, i, 1 (Jan. 1948), 51–5.

DUFF, H. L., *Nyasaland under the Foreign Office*, George Bell (London, 1903).

GARBUTT, H. E., 'Witchcraft in Nyasa (Manganja, Yao (Achawa)), communicated to the Writer', *J.R.A.I.*, li (1911), 301–4.

'Native Customs in Nyasa and the Yao', *Man*, xii (1912), 20.

HETHERWICK, A., *A Handbook of the Yao Language*, S.P.C.K. (London, 1902).

Note on Yao in *Nyasa News* (Nov. 1893), 64.

'Some Animistic Beliefs among the Yaos', *J.R.A.I.*, xxxii (1902), 89–95.

'Islam and Christianity in Nyasaland', *Moslem World*, xvii, 2 (April 1927).

HYNDE, R. S., 'Among the Machinga People', *The Scottish Geographical Magazine*, Edinburgh, viii (1891), 656–63.

'Marriage and relationship among the Yaos', *Nyasa News*, vii (1895), 217–218.

JOHNSON, W. P., 'Discovery of the Source of the Lujenda', *Proc. Roy. Geog. Soc.*, viii (Aug. 1882), 480–4.

'Seven Years of Travel in the region East of Lake Nyasa', *Proc. Roy. Geog. Soc.*, viii (Aug. 1884), 313–36.

'The Yaos: a defence and a Suggestion', *Nyasa News*, ii (1893), 55–8.

'More about the Yaos', *Nyasa News*, iii (1894), 77–80.

Nyasa, the Great Water, Oxford University Press (London, 1922).

JOHNSTON, H. H., *British Central Africa*, Methuen (London, 1897).

LAWS, R., *Reminiscences of Livingstonia*, Oliver & Boyd (Edinburgh, 1934).

LAWSON, A., 'An Outline of the Relationship System of the Nyanja and Yao Tribes in South Nyasaland', *African Studies*, viii, 4 (Dec. 1949), 180–90.

2: Mitchell E-5 (1946-1949) 1956 FT7 Yao FT7

LIVINGSTONE, D. and C., *Narrative of an Expedition to the Zambesi and its Tributaries, and of the Discovery of Lakes Shirwa and Nyassa, 1858-64*, John Murray (London, 1865). 113

MACDONALD, DUFF, *Africana or the Heart of Heathen Africa* (2 vols.), Simpkin Marshall & Co. (London, 1882).

MAPLES, C., 'Mtonya', *Nyasa News*, i (Aug. 1893), 192-6.
'Unango', *Nyasa News*, ii (Nov. 1893).

MITCHELL, J. C. (with GLUCKMAN, M., and BARNES, J.A.), 'The Village Headman in British Central Africa', *Africa*, xix, 2 (April 1949), 82-106.
'The Political Organization of the Yao of Southern Nyasaland', *African Studies*, viii, 3 (Sept. 1949), 141-59.
'An Estimate of Fertility in Some Yao Hamlets in Liwonde District of Southern Nyasaland', *Africa*, xix, 4 (Oct. 1949), 293-308.
'Preliminary Notes on Land Tenure and Agriculture among the Machinga Yao', *Human Problems*, x (1950), 1-13.
'The Yao of Southern Nyasaland', in Colson, E., and Gluckman, M. (eds.), *Seven Tribes of British Central Africa*, Oxford University Press for the Rhodes-Livingstone Institute (London, 1951), 292-353.
'An Outline of the Social Structure of Malemia Area', *The Nyasaland Journal*, iv, 2 (July 1951), 15-48.
'A Note on the African Conception of Causality', *The Nyasaland Journal*, v, 2 (July 1952), 51-8.
Marriage among the Machinga Yao (forthcoming).

MOGGRIDGE, L. T., 'The Nyasaland Tribes, their Customs, and their Poison Ordeal', *J.R.A.I.*, xxxii (1902), 267-72.

MURRAY, S. S. (compiler), *A Handbook of Nyasaland*, Government Printer (Zomba, 1932).

M. T. K., 'The Yaos in the Shire Highlands', *Nyasa News*, iv (1894), 122-3.

O'NEILL, H. E., 'Journal from Mozambique to Lakes Shirwa and Amaramba', *Proc. Roy. Geog. Soc.* (1883-4).
The Mozambique and Nyasa Slave Trade (1885).

ROWLEY, H., *The Story of the Universities Mission to Central Africa from its Commencement under Bishop Mackenzie, to its withdrawal from the Zambesi*, Saunders Otley & Co. (London, 1886).
Twenty Years in Central Africa, Wells Gardner, Darton & Co. (London, 1889).

SANDERSON, M., *A Yao Grammar*, S.P.C.K. (London, 1922).
'A Note on the Ceremonial Purification of the Yao', *Man*, xxii (1922), 55.
'The Relationship system among the Yao', *J.R.A.I.*, l (1920), 369-76.

SCLATER, B. L., 'Routes and Districts in Southern Nyasaland', *Geographical Journal*, ii (Nov. 1893), 403-23.

STANNUS, H. S., 'The Wayao of Nyasaland', *Harvard African Studies* (1923), Varia Africana, III, 229-372.
'Notes on some Tribes of British Central Africa', *J.R.A.I.*, xl (1910), 285-335.

2: Mitchell E-5 (1946-1949) 1956 FT7 Yao FT7

113 STANNUS, H. S., and DAVEY, J. B., 'Initiation Ceremony for Boys among the Yao of Nyasaland', *J.R.A.I.*, xlii (1913), 119–23.

THOMPSON, J., 'Notes on the Basin of the River Rovuma, East Africa', *Proc. Roy. Geog. Soc.*, ii (Feb. 1880), 65–79.

WALLER, H., *The Last Journals of David Livingstone in Central Africa from 1865 to his Death*, John Murray (London, 1874).

YOUNG, E. D., *Nyassa, a Journal of Adventure*, John Murray (London, 1877).

B. OTHER WORKS CITED

BARNES, J. A., 'The Port Jameson Ngoni', in Colson, E., and Gluckman, M. (eds.), *Seven Tribes of British Central Africa*, Oxford University Press for the Rhodes-Livingstone Institute (London, 1951).

Politics in a Changing Society, Oxford University Press for the Rhodes-Livingstone Institute (Cape Town, 1954).

CUNNISON, I., *Kinship and Local Organization on the Luapula*, Communication from the Rhodes-Livingstone Institute, No. 5 (Livingstone, 1950).

DEFFY, P., 'The Distribution of the Population of Nyasaland', *Geographical Review*, xviii (April 1928), 274–90.

EVANS-PRITCHARD, E. E., *Witchcraft, Oracles and Magic among the Azande*, Clarendon Press (Oxford, 1937).

The Nuer, Clarendon Press (Oxford, 1940).

Some Aspects of Marriage and the Family among the Nuer, Rhodes-Livingstone Paper No. 11 (Livingstone, 1945).

FORTES, M., *The Dynamics of Clanship among the Tallensi*, Oxford University Press for the International African Institute (London, 1945).

The Web of Kinship among the Tallensi, Oxford University Press for the International African Institute (London, 1949).

GLUCKMAN, M., 'The Kingdom of the Zulu of South Africa', in Fortes, M., and Evans-Pritchard, E. E. (eds.), *African Political Systems*, Oxford University Press for the International African Institute (London, 1940).

The Economy of the Central Barotse Plain, Rhodes-Livingstone Paper No. 7 (Livingstone, 1941).

Essays on Lozi Land and Royal Property, Rhodes-Livingstone Paper No. 10 (Livingstone, 1943).

'Kinship and Marriage among the Lozi of Northern Rhodesia and the Zulu of Natal', in Radcliffe-Brown, A. R., and Forde, C. Daryll (eds.), *African Systems of Kinship and Marriage*, Oxford University Press for the International African Institute (London, 1950).

'The Lozi of Barotseland', in Colson, E., and Gluckman, M. (eds.), *Seven Tribes of British Central Africa*, Oxford University Press for the Rhodes-Livingstone Institute (London, 1951).

'Succession and Civil War among the Bemba—An Exercise in Anthropological Theory', *Human Problems in British Central Africa*, xvi (1954), 6–25.

HICHENS, W., 'Islam in Africa', in Arberry, A. J., and Landau, R., *Islam To-day* (London, 1943).

2: Mitchell E-5 (1946-1949) 1956 FT7 Yao FT7

EDWARD, H., *An African Aristocracy*, Oxford University Press for the International African Institute (London, 1947). 113

FOX, A., *An Economic History of Tropical Africa*, Oxford University Press (London, 1940).

RICHARDS, A. I., 'Mother-right among the Central Bantu', in Evans-Pritchard, E. E., and others, *Essays Presented to C. G. Seligman*, Kegan Paul (London, 1933).

'The Political System of the Bemba Tribe—North-eastern Rhodesia', in Fortes, M., and Evans-Pritchard, E. E. (eds.), *African Political Systems*, Oxford University Press for the International African Institute (London, 1940).

'Some Types of Family Structure among the Central Bantu', in Radcliffe-Brown, A. R., and Forde, C. Daryll (eds.), *African Systems of Kinship and Marriage*, Oxford University Press for the International African Institute (London, 1950).

SMITH, E. W., and DALE, A., *The Ila-Speaking Peoples of Northern Rhodesia*, Macmillan (London, 1920).

WILSON, G., 'An Introduction to Nyakyusa Society', *Bantu Studies*, x, 3 (1936), 253–91.

WILSON, M., *Good Company: A Study of Nyakyusa Age-villages*, Oxford University Press for the International African Institute (London, 1951).

2: Mitchell E-5 (1946-1949) 1956 FT7 Yao FT7

INDEX

Abdallah, Yohannah B.: 24, 24n.
Aborigines: defined, 62; chieftainship with chief, 71f.; ethnic affiliation, 65; kinship links with chief, 70; proportion Administrative headmen among, 89; proportion entitled to initiation rights, 97; religious affiliation of, 66
Achisi Yao: 24, 71
adelphic succession: 157
affinal relationships: 183f.; kinship terms and cross-cousin marriage, 199
African Lakes Company: 19
Agricultural Officer: 7
Akamwini: see Husbands
Ali Kasoka: village headman, 87
Ali Kasunka: village, 140f., 179
Amangoche Yao: 25
Amasaninga Yao: 25
ancestor spirits: mystical powers of, 126, 138, 178; connected with curse, 138, 178
ancestor worship: 133-4; in pre-White times, 31; by modern chiefs, 52f.; and initiation rights, 80; and rainfall, 53; expresses unity of village, 139; fallen away among village headmen, 52
Anglo-Portuguese Convention of 1891: 28
Arabic greetings: 83
Arabs: 18, 22, 23, 29, 67; influence on names, 46n.
arson: and chieftainship, 55

backbiting: 137
Barnes, J. A.: viii, 2n., 45n., 152n.
Bemba: 36, 63, 71
birth-pang confusions: 146, 166, 185
Black-White relationships: 27
bloodshed: and chieftainship, 54
'blowing water': 138, 165, 166
breast: synonym for lineage section, 134
British rule: appointment of consul in Nyasaland, 28; establishment of, 28, 39; treaties with chiefs, 28
British South Africa Company: 30
brother-brother: relationships, 154, 174
brother-sister: relationships, 145f., 151; incest, 146, 180n.; kinship terminology, 147

Carrall Wilcocks, E.: 7
cash income: 21
Central African Archives: 7
Chamba, chief: 48; son of Kawinga I, 68
Chamba chiefdom: 16, 85; scarlet headbands in, 95
chicken ordeal: 123, 153, 156, 173
chief: and the village headman in pre-White times, 33; bureaucracy of, 44, 45, 123, 213; modern position of, 57, 83, 107; position in Administration, 57, 83, 107; position of sons of, 69; ritual performed by, 34, 52; subjects of in pre-White times, 34
chiefdom: as an organization of villages, 47; composition of, 58; disputes over boundaries of, 47; offences against, 54; social relationships at the boundaries of, 47
Chikala-Chaoni range: 8
Chikowi, chief: 49
Chikweo, chief: 14, 30, 48, 66; clan-name of, 74
Chikweo, chiefdom: 85, 86; scarlet headbands in, 95
Chiwalo, chief: vii, 4, 48, 50, 62, 186; as administrative village headman, 87; sister's daughter's son of Kawinga I, 68; struggle

2: Mitchell E-5 (1946-1949) 1956 FT7 Yao FT7

with Ntimbuka, 96; struggle with Phunyu, 96
Chiwalo, chiefdom: 14, 145; structure of, 62f.
Church of Scotland Mission: 19, 26; founded in Shire Highlands, 27
cilakuto: 82
Cigwija, village headman: 62, 63, 122
Cikuja village headman: 132, 139, 164, 165, 182, 188, 204; dispute with Mapuza, 128; succession of, 139
Cimombo, village headman: installation of, 114f.
Cindumba, village headman: 92
Cingwalungwalu: 38
cipinduke: see institutionalized pillage
ciputa: see girls' initiation ceremonies
circumcision: 81, 82
cirlo: see oblational basket
clan exogamy: 72
clan-names: 71f., 131; general decline of importance of, 72; lost during social unrest, 72; of Chikweo, 74; of Malemia, 49, 73; of Krwinga, 73; of Mpona, 73; of Ngokwe, 74; patrilineal inheritance of by slave children, 72; significance in political structure, 73
climate: 10
Codrington, R.: 38
coinage issued: 31
collectors appointed: 31
conception, Yao theory of: 183
councillors: 64; see also *akuluu*
courts, chiefs': 55, 64; court messors in, 56; types of cases tried in, 55, 56
cross-cousins: 195, 197f.; behaviour between, 202f.; joking relationships between, 197, 203; marriage of, 144, 197f.; terminology as minor marriage of, 199; significance to village structure, 200
Cunison, I.: 12n., 122n.
curse: 135f., 178
death, an attack on village solidarity: 123
District Administration (Natives) Ordinance of 1912: 41, 79, 84, 161, 206
District Books: an aid to field work, 7
District Commissioner: 4, 85, 109, 120, 162
Districts: formed, 31; boundaries of, 47
diversification of wants: 18f.
divination: 113, 137, 150, 153n., 156, 165, 166, 168, 171, 173, 179
divorce: 186
Dixry, F.: 10n.
Domasi River: 47
domestic slavery: and early village disintegration, 39f.; and patrilaterally-linked groups, 195f.; British suppression of, 39
dress: headmen's, 77-8
Duff, H. L.: 81, 95

Elton, Capt.: 28
estates of holding: 62f.
Evans-Pritchard, E. E.: 153n., 163n.

father-child relationships: 184f.
father-daughter incest: 146
fences: around huts of important headmen, 78
field work: dates of, vii; importance of women in, 6; methods of, 4f.; rumours in connection with, 4-5
fire: and chieftaincy, 55; in village ritual, 112
fœtal quickening ceremonies: see *lilaso*
Fort Johnston District: 25, 26, 49; transfer of Nyambi chiefdom to, 51
Fortes, M.: 153n., 163n., 186n., 207
founding ancestor: 132, 133
funeral oblations: 125

gardens: 220
genealogy: 4, 6, 7, 122n., 207

2: Mitchell E-5 (1946-1949) 1956 FT7 Yao FT7

ghoul-motif in Yao sorcery: 117n.
Gluckman, M.: viii, 37n., 63n., 152n., 163n., 176; on the village headman, 1, 1f.
Great Rift Valley: 8

headwomen: 143f.
hunting: mystical dangers of malice during, 138
husbands: 118, 119, 124, 183f.
huts: construction of, 46, 209
Hynde, R. S.: 35n., 40, 72n.

identification of alternate generations: 175f.
Imam of Oman: 22
immigration from Mozambique: 59
initiands: 47, 80
initiation baskets: see oblational baskets
initiation ceremonies: 134; boys', 80f., 91; dependence on ancestor cult, 80; effect of Christianity upon, 82; effect of Islam upon, 82; girls', 80f., 91; 'the mothers' in, 134
initiation ceremony rights: 80, 95f.; proportion of Aboriginal, Invader and Newcomer headmen entitled to, 97; relationship to ethnic affiliation, 102; relationship to kinship with chief, 100; relationship to religious affiliation to chief, 102; when granted to headmen, 102
installation ceremonies of headmen: 114f.; chief's rôle in, 123
institutionalized pillage: 53
Invaders, headmen: clanship with chief, 71f.; defined, 62; ethnic affiliation of, 65; kinship links with chief, 69; proportion Administrative headmen among, 89; proportion entitled to initiation rights, 97; religious affiliation of, 66
Islam: and matriliny, 157; distinguishing mark of the Yao, 67; effect on ancestor worship, 139; effect on initiation ceremonies, 82, 213; schism in, 51

Jalasi, chief: 5, 25, 29, 38n., 43, 48, 49; arrival in Nyasaland, 49; clan-name of, 49; relationship with Kawinga and Liwonde, 50; relationships with Namwera, 48; return to Nyasaland, 58; succession of, 160
Jalasi, III, chief: 48
Jalasi chiefdom: 13n., 49, 85; scarlet headbands in, 94
jando: 82
Jesuits: 22
Johnston, H. H.: 29, 37, 38n.
joking relationships: between cross-cousins, 197, 203

Kalembo, chief: 5, 25, 38
Kalembo, chiefdom: 13n.
Kalonga, village headman: 86, 109
Kangomba, village headman: 64, 92, 120
Kapuloma, village headman: 62, 63, 119
Kapeni, chief: 25, 26, 27, 49
Kanili, chief: 5, 24, 71; British capture of, 50; succession of, 161
Kanili, chiefdom: 13n., 49
Kawinga, chief: vii, 4, 25, 26, 29, 38, 38n., 43, 47, 48, 49, 68; arrival in Nyasaland, 50; at Nyenje's installation ceremony, 120, 123n.; British defeat of, 50; clan-name, 50, 73; knife of, 78; perpetual brother of Liwonde, 50, 122; relationships with Jalasi and Nyambi, 50; return to Nyasaland, 58; succession of, 160
Kawinga III, chief: 43, 47
Kawinga, chiefdom: 49, 85; scarlet headbands in, 95
Kilwa: 22, 23, 37
kinship: basis of village structure, 131f.; brother-brother relationships, 154, 174; brother-sister relationships, 146, 151; cross-

2: Mitchell E-5 (1946-1949) 1956 FT7 Yao FT7

cousin relationships, 195, 197f.; mother's brother-sister's son relationships, 177f.; mother-daughter relationships, 173; terminology, 136, 147, 173, 199; terminology applied to slaves, 196
knives: carried by important headmen, 78; surrendered to British authorities, 38
Kokhola: tribe, 17
Koper, H.: 163n.
Kowa, tribe: 17
Kumunbu, village headman: 92

labour: on coffee estates, 20; migrants, 21, 21n.; migration a factor in village concentration, 206
Lacerda: 18, 22
Lake: Amarumbo, 8; Chiuta, 8, 49, 59; Shirwa, 8; salt from, 20
Lakeside Tongs: 71, 72
land claims: 31
land holding system: 62f.
lilunge: see pimple
liniwo ceremonies: 57, 134; sister represents brother at his wife's, 146
Livingstone, D.: 23, 26, 27, 32
Liwonde, chief: 25, 43, 47, 48, 49, 68; arrival in Nyasaland, 50; British capture of, 30; clan-name of, 50; dispute with Ndenda, 108; perpetual brother of Kawinga, 50, 122; relationship with Jalasi and Nyambi, 50
Liwonde, chiefdom: 13n., 49, 83; scarlet headbands in, 95
Liwonde district: 49
local organization: 64, 204f., 212
Lomwe, tribe: 2, 14, 16, 25, 58, 59, 66, 71; clan-names among, 71; initiation ceremonies among, 82
Lujenda River: 25
lukoya: see clan-names
lupanda: see boys' initiation ceremonies
Lupanje village, split of: 125

MacDonald, Duff: 26, 31, 32, 33, 34, 35, 36, 36n., 37, 40, 62, 64, 78n., 80, 84, 107, 111, 112, 139, 157
Machinga Yao: 23, 71, 73
Mackenzie, Bishop: 26; death of, 26
magic: anti-lion, 57; sexual intercourse through, 180n.
Maguire, Capt.: 30
Majaja, village headman: 81, 122, 164
Makaca, village headman: 92
Makanjila, chief: 25, 29, 30, 162
Makanjila, chiefdom: 49
Makata, village headman: 62, 63, 96
male authority: 143f., 147, 181
Malemia, chief: 25, 26, 38, 43; arrival in Nyasaland, 49; clan-name, 49, 73; Kawinga's attack on, 30; succession of, 157
Malemia, chiefdom: 7, 13n., 49; density of population, 61; initiation ceremonies in, 82; scarlet headbands in, 94
Mangoche highlands: 8, 49
Mapata, village headman: dispute with Cikoja, 122; installation of, 118
mapete: 63, 123, 156
Mapunda, village headman: 92
Marawi people: 71
Marenje, tribe: 17
marriage sureties: 127n., 149f., 167, 176f., 182; in Cikoja village, 191
Masinde, village headman: 92
Matuka, chief: 23
Matuka Yao: 71
Matipwiri, chief: 25, 26, 38n., 50
matrilineage: 131, 133f.; dominant, 110, 132, 163, 183; segmentation of, 132f.; duties of members of, 136; spatial disposition of, 164; symbolized by a tree, 119
matriliny: 131f., 207, 208
Mbande, village headman: 73, 92
Mbela, village headman: 47
Mbera, village headman: 92
mbumba: see sorority-group
merging of alternate generations: 175, 202
Metho, tribe: 17

2: Mitchell E-5 (1946-1949) 1956 FT7 Yao FT7

0790 Mihavani, tribe : 17
mimi : see backbiting
missionaries, entry of : 19, 26, 37
Mkanda, chief : 36
Mkumba, chief : 48, 49
mlongali : see scarlet headband
Mkumbo, village headman : 51, 160
Mlumbe, chief : 25, 26, 49
modern economic situation: 20-1, 213
money, introduction of : 19
mosques : at *nkosi's* villages, 64
mother-daughter relationships : 173
mother-son relationships : 135
mother's brother-sister's son relationships : 147f., 154, 160, 161, 176f.
mourning : 137
Mozambique : 8, 14, 23, 24, 28, 30, 49, 58, 59, 60, 66, 73
Mpama, chief : 26, 27, 36
Mponda, chief : 25, 26, 29
Mponda, chiefdom : 132., 572.
Mpoza, chief : 48, 73 ; clan-name of, 73 ; son of Liwonde I, 68
Mpoza, chiefdom : 16, 85, 140 ; initiation ceremonies in, 82 ; scarlet headbands in, 95
Mpotola tribe : 14, 30, 58, 59, 66, 71 ; clan-names among, 71
Mpumbe village : history of, 59 ; composition of, 197 ; succession in, 161
Mumbwa, village headman : 62, 63
Murray, S. S. : 42n., 42n., 43, 43n.

Nahara tribe : 17
Nanwera chief : 48, 49
Nankhumba chiefdom : 49
Native Authorities : 56, 83 ; relationships to each other, 50
Native Authority's : bureaucracy, 43 ; courts, 56
Native Authority Ordinance (1933) : 44, 83
Native Courts Ordinance (1933), 55 ; powers of Native Authorities under, 55
ndoba : 56, 112, 133, 172, 180 ; description of, 112n.
Ndendo, village headman : 108
nduna : 64, 74, 79, 89, 92f., 123, 212
Newcomer headmen : defined, 62 ; chieftship with chief, 71f. ; ethnic affiliation of, 65 ; in Chiwalo chiefdom, 87 ; kinship links with chief, 70 ; proportion Administrative headmen among, 89 ; proportion entitled to initiation rights, 97 ; religious affiliation of, 67
Ngalawanga, village headman : 81
Ngokwe, chief : 14, 30, 48, 66 ; clan-name of, 74
Ngokwe, chiefdom : 59, 66, 85 ; scarlet headbands in, 95
Ngongondo, village headman : 59, 162
Ngoni tribe : 17, 26, 68, 196
Nguru tribe : see Lourwe
Nikhukhu tribe : 17
Nkaccheuga, village headman : installation of, 118
Nkanyela, chief : 58, 73
Nkata, chief : 25, 29, 48, 49, 50
Nkumala chief : 25, 29
Nkumala chiefdom : 132.
Nunanna, village headman : 68, 92
nuso : see shrine-tree
nwalo : 82
Nzaja chiefdom : 132.
Nzapuza, village headman : 87
Nzibwilibwi, village headman : 64
Nzimbuka, village headman : 96, 109
Nzumanje chief : 25
Nzumanje chiefdom : 132., 47
Nyambi, chief : 25, 43 ; Majaja his perpetual son, 122 ; perpetual son of Nkata, 51 ; relationships with Kawinga and Liwonde, 50
Nyambi, chiefdom : 132., 49, 145 ; included in Fort Johnston district, 52 ; scarlet headbands in, 95
Nyamwezi tribe : 17
Nyani, village headman : 73
Nyanja tribe : 2, 14, 16, 17, 25, 27, 58, 66, 67, 92, 196
Nyanja, village headman : 62, 63

2: Mitchell E-5 (1946-1949) 1956 FT7 Yao FT7

Nyasaland Government: 7
Nyenje, village headman: 64; installation of, 120

oblational basket: 80, 96
opposition of proximate generations: 134, 160, 175f.

paternity: 163, 185
patrilateral links: 183f., 187, 207, 208; and succession, 162; spatial representation of, 190, 210
perpetual relationships: 122, 178, 207, 208
pimple: 173n.
population: density, 12; in tribal areas, 13; possible cause of migration from Shire Highlands, 61
Portuguese: 5, 22, 23, 28, 30, 59, 87
Portuguese East Africa: see Mozambique
positional succession: 122n., 181f.
precedence among village headmen: 79
pregnancy: mystical danger of, malice during, 138
primogeniture: 157f.
Principal headmen: 42, 47; duties of, 42; selection of, 42; woman appointed, 161
principle of primacy: 61f., 86, 207
Protectorate proclaimed: 28

quantitative material: analysis of, 7; collection of, 6
Qulimane: 37

rainfall: 10f.; diagram of, 11; magical prevention of, 57
Ruba tribe: 17
Richards, A. I.: 63n., 122n., 124n.
ritual: death and rebirth of headman, 121; village founding, 111
Rovuma River: 23, 31
Rowley, H.: 31

salt: mystical importance of, 137
Sanderson, M.: 140n., 199
scarlet headbands: 78, 91f., 104; in Chikweo area, 95; in Kawinga-Liwonde area, 95: in Mposa area, 95; in Nyambi chiefdom, 95; proportion of headmen entitled to wear, 92; size of villages of headmen entitled to wear, 93
Schapera, I.: 47n.
seasons: 11
seating arrangements in relation to rank: 79
segmentation: 131, 152f., 165, 179
Selemani village headman: 87
Sharpe, A.: 28, 30
Shire Highlands: 8, 26, 28, 31; density of population in, 61
Shire River: 8, 31, 49, 59, 68, 86
Shirima tribe: 17
shrine-tree: 80, 134, 162
slave trade: 18, 28, 35, 37; significance to Yao chieftaincy, 37; suppression of in Nyasaland, 29
slaves: British release of, 39; children take captor's clan-name, 72; descendants in villages, 196; exchange value of, 18, 35; quasi-kinship status of, 196; sons of chiefs, 69
soils: 10, 59, 211
sorcery: 4, 112, 117n., 125, 137, 146, 153n., 156, 158, 165, 167, 170, 178, 180
sorority-group: 25, 138, 145f., 149
Stannus, H. S.: 25n., 73, 134n., 157
Steora, village headman: 68, 92
structural change: 212f.
succession: age at, 159; disputes, 157; mother's mother-daughter's daughter, 175; non-matrilineal, 160-1; positional, 122n., 181f.; rules of, 157

Tanganyika: Yao in, 71
taxation: introduction of, 20, 31
tax-payers: 84, 93, 107
tax-registers: as field work aid, 6
temperatures: 12
Thokwani tribe: 17

2: Mitchell E-5 (1946-1949) 1956 FT7 Yao FT7

tobacco markets : 51
topography and surface water : 8
trade : introduction of, 19 ; with coast, 37
treaties with chiefs : 28
tribal composition of chiefdoms : 14
tribal inter-marriage : 16

Universities Mission to Central Africa : founded in Nyasaland, 26 ; moved to Zanzibar, 27
uxorilocal marriage : 143f., 183

vegetation : 12
village : a discrete unit, 110 ; boundaries of, 111 ; census, 5 ; definition of, 3, 206 ; development from extended family, 192 ; evolution of, 209f. ; foundation rituals of, 111 ; fundamental unit in Yao social structure, 3 ; importance in social interaction, 46 ; importance of unity of, 124 ; in pre-White times, 31f. ; in time, 209f. ; migration of, 211 ; physical development of, 209
village, Administrative : 3, 84f. ; origin of, 84 ; size of, 88
village headmen : and followers in pre-White times, 35 ; chief at installation ceremony of, 123 ; clanship with chief, 73f. ; dress as indicator of rank, 77, 114 ; duties of, 113, 126 ; ethnic affiliation of, 65 ; installation of, 114f. ; in pre-White times, 32f. ; kinship links with chief, 69f. ; kinship terminology changes after succession, 122 ; link between dominant lineage and patrilaterally-linked groups, 193 ; moral behaviour of, 127 ; susceptible to mystical danger, 108 ; precedence among, 79 ; rank among, 76 ; recognize superiors, 63 ; religious affiliation of, 67 ; representative of a corporate group, 110, 124, 128f. ; representative to outside authority, 112 ; respected by commoners, 114 ; rights of, 113 ; ritual death and rebirth of, 121 ; ritual position of, 111 ; seating arrangements of, 79 ; settle disputes, 64, 126 ; struggle against the chief, 107f. ; unenviable position of, 113
village headmen, Administrative : 79, 205 ; appointment of, 84 ; as a mark of rank, 79 ; competition for initiation rights, 96 ; ethnic affiliation of, 91 ; kinship with chief, 75 ; proportion Aborigine, Invader and Newcomer, 89 ; proportion entitled to initiation rights, 97 ; proportion of all village headmen, 85 ; proportion related to chief, 90 ; religious affiliations of, 90
village splits : 124 ; Cikumba's, 127 ; Misi's, 158 ; Mponda's, 154f. ; Mwambajila's, 153
villages : break-up of, 77, 124 ; complex, 204f. ; development of complex, 187-8 ; includes non-kinsmen, 204 ; in Luapula valley, 1 ; Lozi, 1 ; movements of in Kawinga-Liwonde area, 59f. ; Ngoni, 1 ; Nyakyusa, 1 ; physical appearance of, 46 ; size of in pre-White times, 40 ; split-up following British conquest, 40
virilocal marriage : 124, 143f.

warden : of sorority-groups, 138, 145f., 152, 209
water-holes : 130
water supplies : 10
Wilson, G. : 1n.
Wilson, M. : 1n.
witchcraft : see sorcery
womb : synonym for lineage segment, 136, 152
women : importance in field work, 6

Yao tribe : and early missionaries, 26 ; as slavers, 23, 28, 30, 37 ; as traders, 18, 23, 37 ; British expeditions against, 29, 30, 38 ;

2: Mitchell E-5 (1946-1949) 1956 FT7 Yao FT7

groups of, 24; historical background of, 22f.; invasion into Nyasaland, 25; origin of, 24; traditional home of, 14, 22, 61

Zarafi: see Jalusi

Zomba District: 25, 49

Zulu tribe: 36, 63

Printed in Great Britain by Butler & Tanner Ltd., Frome and London

2: Mitchell E-5 (1946-1949) 1956 FT7 Yao FT7

Generation—A B C

361
613
624

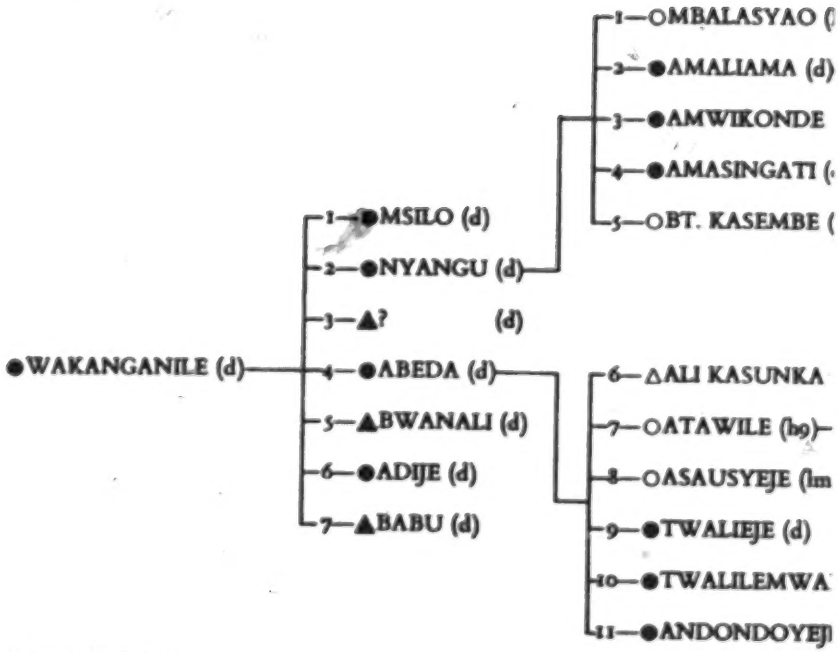

APPENDIX B

[End chart 1a]

361
613
624

C D E

1—△BILLIE (h8)
2—△DAILESI (h8)
3—▲? (d)
4—▲? (d)
5—▲? (d)
6—▲? (d)
7—△AMASAMBA (h3)
8—△MJAIDI (lm)

1—○BT. NTUWA (h3)
2—○NALOLAPE (lm)
3—△YAHAYA (mo)
4—△AJIDA (mo)
5—△ATWABI (mo)
6—△TAIMU (lm)
7—△IDI (lm)
8—○LONI (h8)

3ALASYAO (h8)

9—▲GOLOSI (mo)
10—△MWANACE (h6)
11—○NYANGU ii (mo)
12—○ALIEJE (h4)
13—●TUJELANI (d)

9—△KASONGA (h4)
10—△UNDEJE (h4)
11—○AMALE (h4)

4ALIAMA (d)

4WIKONDE (d)

14—△MBOGA (h8)

4ASINGATI (d)

KASEMBE (h1)

15—○BT. SALE (h5)

12—▲TAIBU (d)
13—△RAJABU (h5)

16—BILIATE (mo)
17—●? (d)
18—●? (d)

.I KASUNKA (h7)

'AWILE (h9)

19—○BT. NTEMULA (h2)
20—▲SAIDI (d)
21—●AMANYASI (d)
22—●ATUJE (d)
23, 32 } ▲10 male stillbirths

14—△WILSON (h2)
15—●? (d)

AUSYEJE (lm)

VALIEJE (d)

VALILEMWAPI (d)

33—△MBOGA (lm)

JDONDOYEJI (d)

34—△? (mo)
35—△? (mo)

[End Chart 1b]

2: Mitchell E-5 (1946-1949) 1956 FT7 Yao FT7

361
613
621

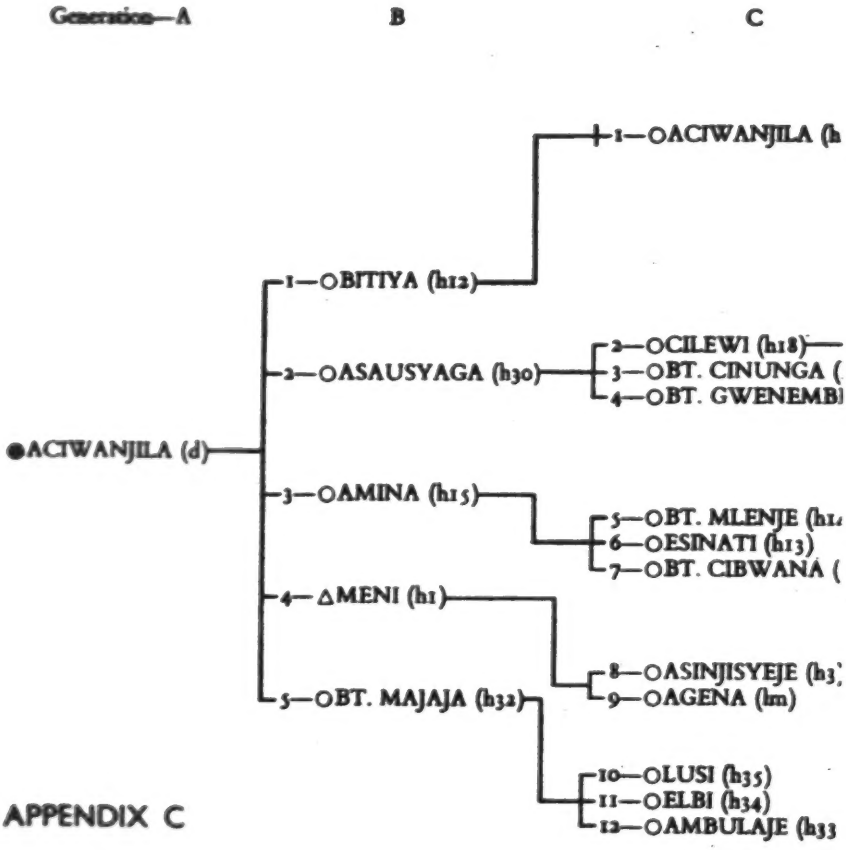

APPENDIX C

[End chart 2a]

2: Mitchell E-5 (1946-1949) 1956 FT7 Yao FT7

361
613
621

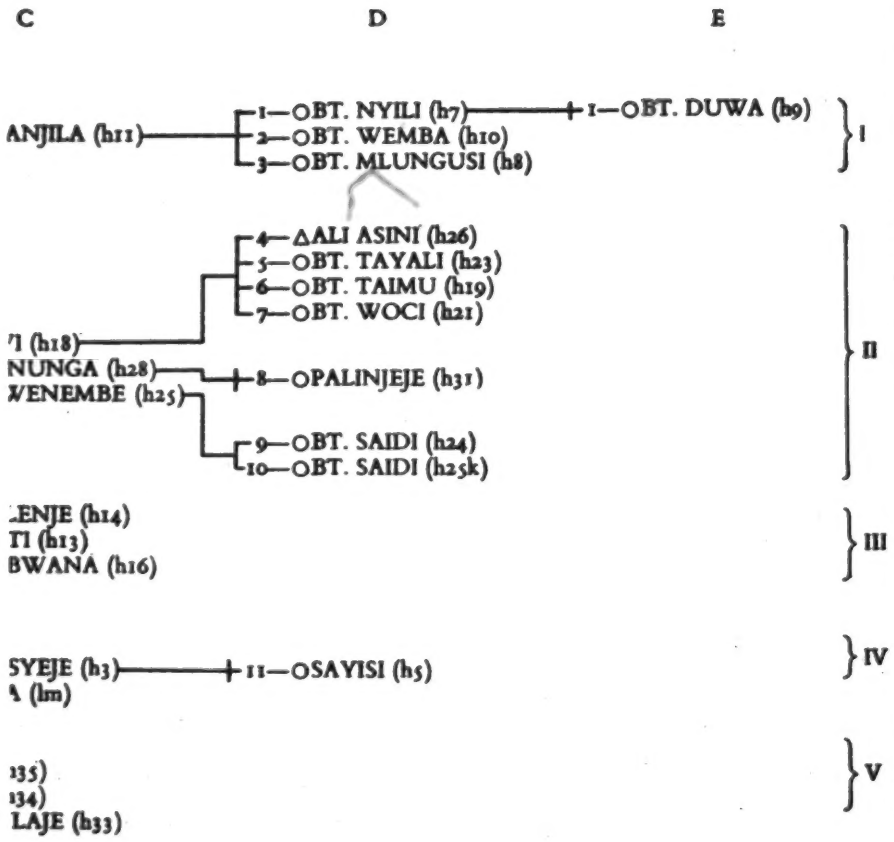

[End chart 2b]

2: Mitchell E-5 (1946-1949) 1956 FT7 Yao FT7

Generation A B

361
613
621 APPENDIX D

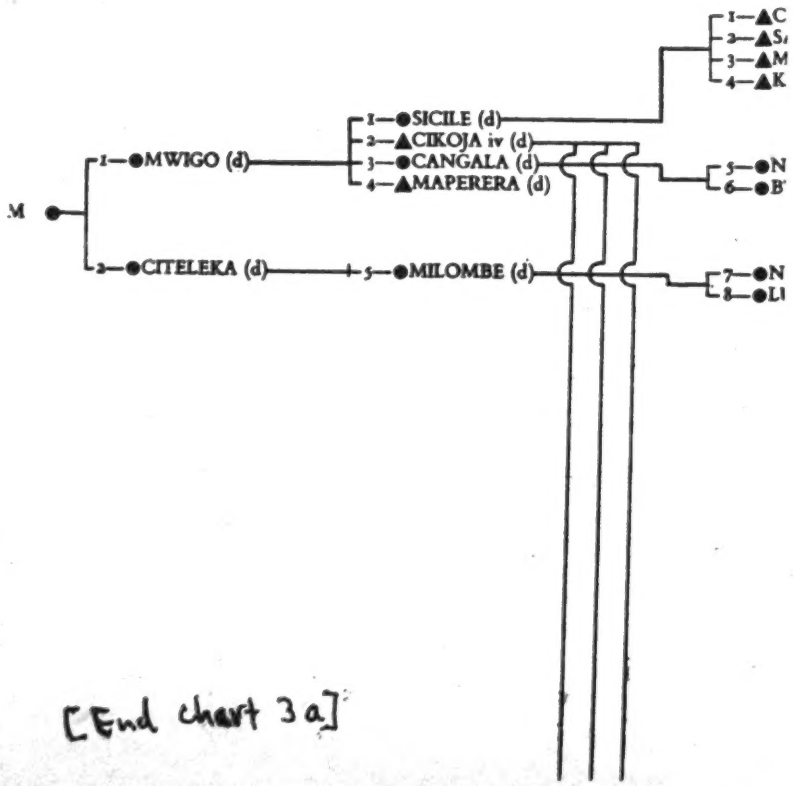

[End chart 3a]

2: Mitchell E-5 (1946-1949) 1956 FT7 Yao FT7

C D

361
613
624

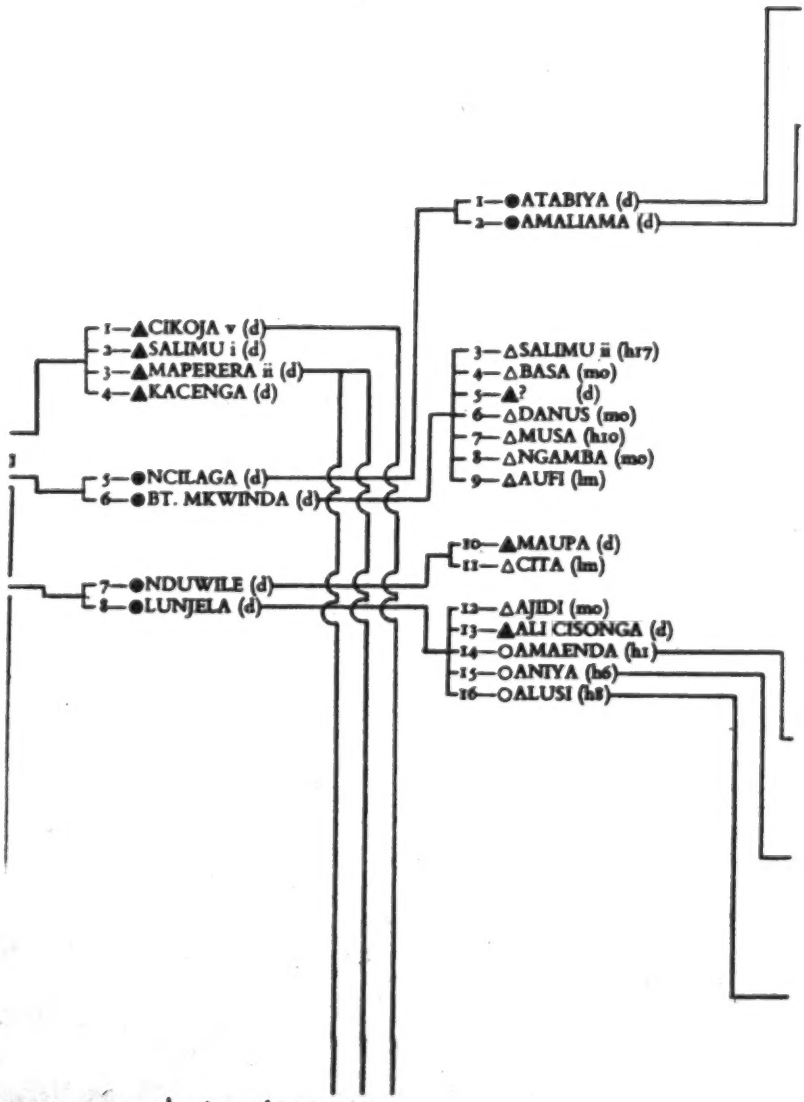

[End chart, 3 b]

2: Mitchell E-5 (1946-1949) 1956 FT7 Yao FT7

361
613
621

E

1—●WEGAMI (d)
2—●ASUNA (d)
3—○BT. NTALIKA (h37)
4—○BT. AMISA (h13)
5—●? (d)
6—○ASIMAMA (h46)
7—△CIKOJA vi (h47)
8—○AYESI (h2)
9—○ASUBIYA (h14)

)
(d)

117)

)

10)

A (d)
h1)

10—△LILE (mo)
11—△WAISONO (lm)
12—△AMULI (h1)

13—○LUNJELA ii (h9)
14—○BT. AMAMU (h7)
15—○INDI (h5)
16—○ALEJEPANYUMA (u, h6)
17—○AIDI (u, h6)
18—●? (d)

19—○BT. BEULA (h5)
20—△TENNIS (lm)
21—○AWULUSYA (u, h8)
22—○? (u, h8)
23—●? (d)

F

1—△CILIMBA (h34)
2—○BT. MBWANA (h43)
3—△KAUSI (h41)
4—△GWILI (mo)

5—●? (d)
6—△SEMU (mo)
7—△JAUMA (h32)
8—▲ASSAM (d)
9—△AJISA (mo)
10—○BT. MADI (h35)
11—○BT. ALIYA (h36)

12—△SIME (u, h3)
13—△IDI (u, h3)
14—●? (d)
15—▲? (d)

16—○BT. BWANA ISA (h1:
17—▲DELEMANI (d)
18—△AMIDU (mo)
19—△KANYENGA (mo)
20—△RAJABU (h15)
21—△KAPINGU (KAR)
22—△AKIBA (u, h15)
23—▲AJISA (d)
24—△FRED (mo)
25—△GERALD (u, h12k)
26—▲AJISA (d)

27—○BT. MAKWESA (lm)
28—○MEGE (h42)
29—○AYUYEJE (h44)
30—○KASI NGATI (h45)
31—○NKATENDESYAGA
32—△BILI (u, h47)
33—●? (d)
34—●? (d)
35—●? (d)

36—△KAIFA (mo)
37—○BT. TEPANI (h4)
38—△AIDINI (u, h2k)
39—△ALANGA (u, h2k)
40—▲? (d)
41—△KAUSI (u, h2)
42—△JAMES (u, h2)

43—▲? (d)
44—▲? (d)
45—△MALOGWAGA (u, h
46—▲SELEMU (d)
47—●ALUWINDA (d)
48—○? (h14)

49—○NDIWASYAGA (u, l
50—●? (d)
51—●? (d)
52—●? (d)

53—○? (u, l

[End chart 3c]

361
613
624

F

IBA (h34)
IBWANA (h43)
SI (h41)
I (mo)

(d)
J (mo)
IA (h32)
M (d)
(mo)
IADI (h35)
LIYA (h36)

(u, h3)
, h3)
)
)

WANA ISA (h12)
MANI (d)
U (mo)
ENGA (mo)
BU (h15)
NGU (KAR)
A (u, h15)
(d)
(mo)
LD (u, h12k)
(d)

AKWESA (lm)
(h42)
EJE (h44)
NGATI (h45)
ENDESYAGA (h42)
s, h47)
l)
l)
l)

(mo)
EPANI (h4)
I (u, h2k)
GA (u, h2k)
l)
I (u, h2)
(u, h2)

(d)
(d)
GWAGA (u, h2k)
IU (d)
INDA (d)
(h24)

ASYAGA (u, h9)
(d)
(d)
(d)

3
(u, h5)

G

1—○BT. KIMU (h38)
2—△WILLARD (u, h38)
3—△ASANI (u, h38)
4—△AISONI (u, h38)

5—▲? (d)
6—●? (d)
7—○AKULUPILILE (u, h35)

8—○ABU (u, h36)

9—●NCILAGA (d)
10—○BT. MWAMADI (h11)
11—△DOUGLAS (mo)
12—○UCINGAMILE (u, h13)
13—○ANGALIUNGOSWE (u, h13)
14—○APANJISYEJE (u, h12)
15—△ASINOSI (u, h12)
16—○AWINJI (u, h12)
17—○? (u, h12)

18—△TWAIBU (lm)
19—△ALENGA (lm)
20—●? (d)
21—▲? (d)
22—△? (u, lm)
23—△? (u, lm)

24—●? (d)

25—○AKANENA (u, h44)
26—△? (u, h44)
27—●? (d)
28—●? (d)

29—▲? (d)
30—○? (u, h45)

31—△BULAIMU (u, h4)

H

1—△NTALIKA (u, h38)
2—○AMILE (u, h38)
3—▲? (d)

4—△MBONA (u, mi)
5—○NGANIJAO (u, h12)

6—●? (d)
7—▲? (d)
8—●? (d)

[End chart 3d]

2: Mitchell E-5 (1946-1949) 1956 FT7 Yao FT7

361
613
621

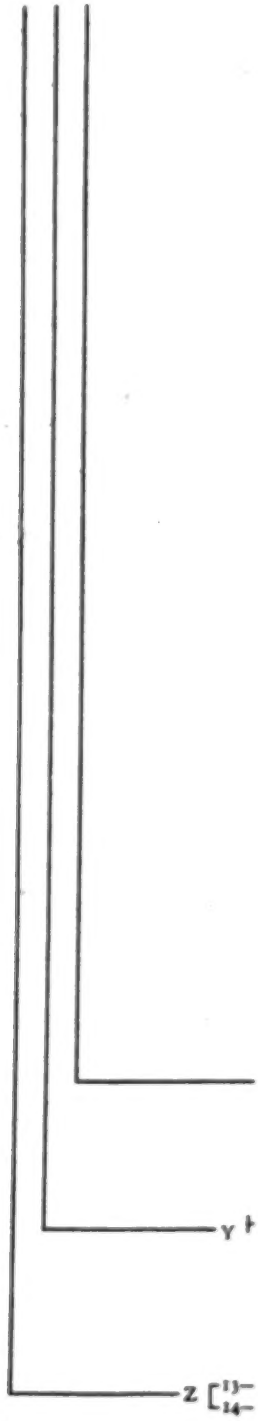

Dominant matrilineage in CAPITALS
Hut numbers in brackets after names
Other symbols :—
d = dead
mo = married out
lm = labour migrant
u = below age of puberty
mi = migrated
k = kitchen
KAR = King's African Rifles

[End chart 3a]

2: Mitchell E-5 (1946-1949) 1956 FT7 Yao FT7

361
613
621

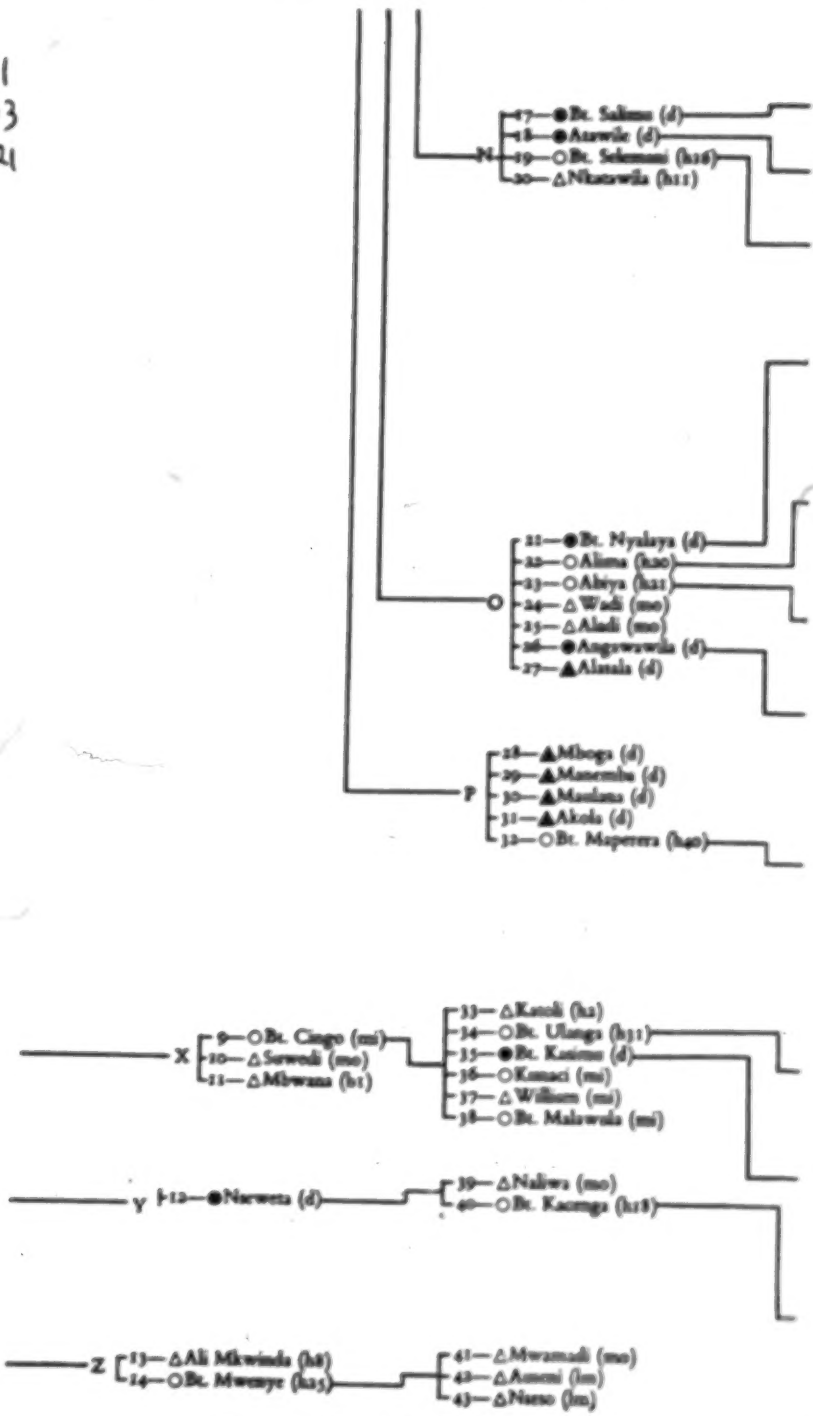

[End chart 3f]

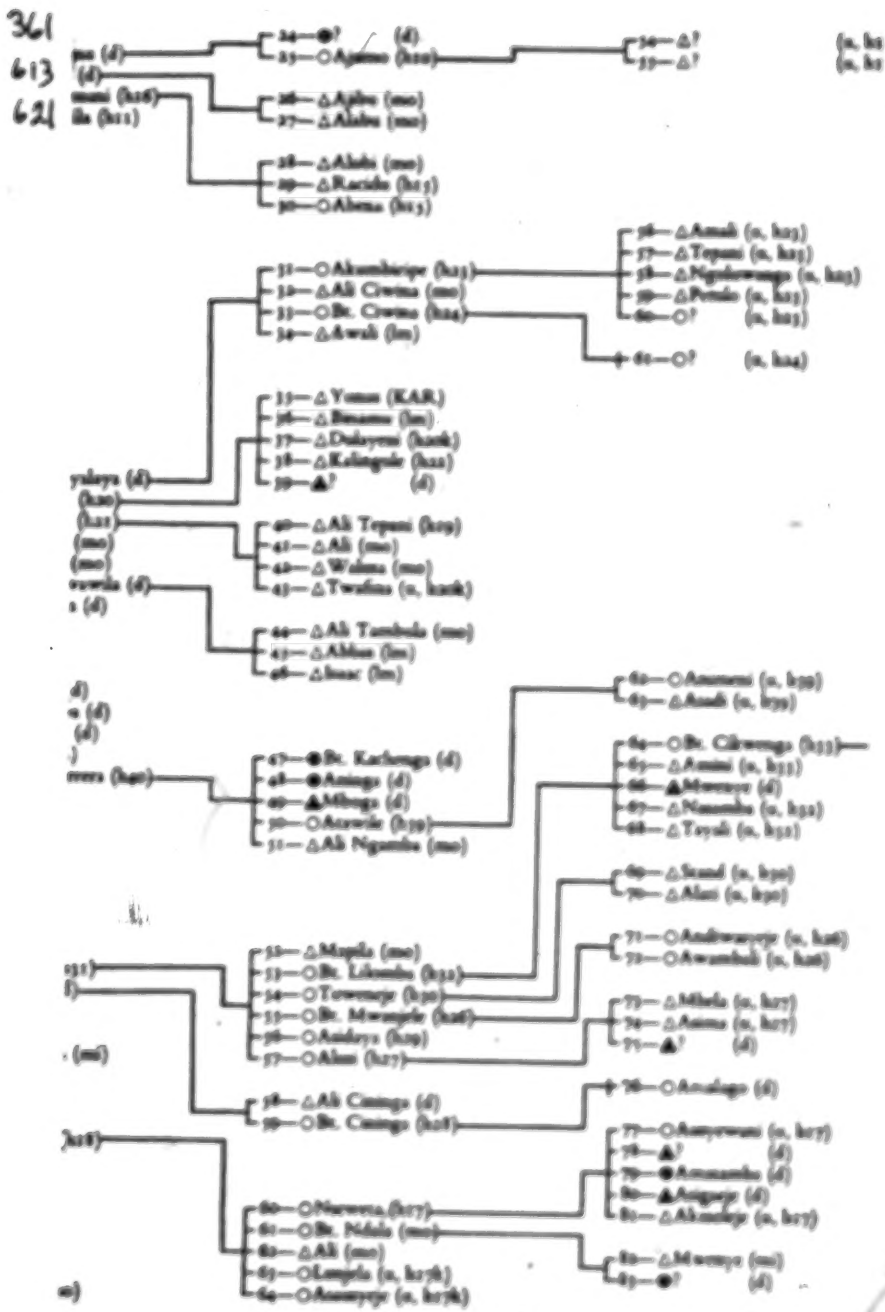
361
613
621
24—●? (d)
25—○Ajamo (h20)
26—△Ajibu (mo)
27—△Alabu (mo)
28—△Alabi (mo)
29—△Raciabu (h15)
30—○Abena (h15)
31—○Akumbiripe (h23)
32—△Ali Ciwina (mo)
33—○Bt. Ciwina (h24)
34—△Awali (lm)
35—△Yunus (KAR)
36—△Benamu (lm)
37—△Dukayemi (hank)
38—△Kalingule (h22)
39—▲? (d)
40—△Ali Tepani (h29)
41—△Ali (mo)
42—△Wahma (mo)
43—△Twafina (o, hank)
44—△Ali Tambula (mo)
45—△Ahlan (lm)
46—△hasar (lm)
47—●Bt. Kachenga (d)
48—●Amingo (d)
49—▲Mbuga (d)
50—○Azawile (h39)
51—△Ali Ngambu (mo)
52—△Mapala (mo)
53—○Bt. Likombo (h31)
54—○Towenaje (h30)
55—○Bt. Mwangale (h26)
56—○Andeya (h29)
57—○Alani (h27)
58—△Ali Cuinga (d)
59—○Bt. Cuinga (h28)
60—○Nawewa (h27)
61—○Bt. Ndala (mo)
62—△Ali (mo)
63—○Lempala (o, h28)
64—○Amanyaje (o, h28)
65—○Amani (o, h33)
66—▲Mwenye (d)
67—△Nasumba (o, h32)
68—△Teyali (o, h32)
69—△Saad (o, h30)
70—△Alani (o, h30)
71—○Andwanyaje (o, h28)
72—○Awambali (o, h28)
73—△Mbela (o, h27)
74—△Asima (o, h27)
75—▲? (d)
76—○Amalago (d)
77—○Amyewani (o, h27)
78—▲? (d)
79—●Amasambu (d)
80—▲Anigaje (d)
81—△Akmaleje (o, h27)
82—△Mwenye (mo)
83—●? (d)

[End chart 3g]

[illegible]
[illegible]

361
613
621

[illegible] (illegible)
(illegible)
[illegible] (illegible)
(illegible)
(illegible)

(illegible)

[illegible] (illegible) — 52 — O? (illegible)
(illegible)

[illegible] (illegible)
(illegible)
[illegible] (illegible)
(illegible)

(illegible)
(illegible)

[illegible] (illegible)
[illegible] (illegible)

(illegible)
(illegible)
(illegible)

(illegible)

[illegible] (illegible)
(illegible)
[illegible] (illegible)
(illegible)
[illegible] (illegible)

[illegible] (illegible)
(illegible)

[End chart 34]

3:Stanmus D-5 (ca. 1912) 1922 FT7 Yao FT7

HARVARD AFRICAN STUDIES

VOLUME III

VARIA AFRICANA III

EDITORS
E. A. HOOTON, Ph.D., B.Litt.
NATICA I. BATES

ASSISTANT EDITOR
RUTH OTIS SAWTELL

[Title Page]

THE AFRICAN DEPARTMENT OF THE
PEABODY MUSEUM OF HARVARD UNIVERSITY
CAMBRIDGE, MASS., U.S.A.
1928

3:Stanton D-5 (ca. 1912) 1922 FT7 Yao FT7

THE WAYAO OF NYASALAND

HUGH STANTON STANTON M.D., M.R.C.P. (Lond.), M.R.C.S. (Eng.), F.R.A.I.

In the *Journal of the Royal Anthropological Institute* for 1910,[1] there appeared, under the title of 'Notes on some tribes of British Central Africa,' observations made by me on natives around the southern end of Lake Nyasa. These notes referred largely to the Angonde people. Since then I have been stationed for several years at Ruaha in the West highlands of Nyasaland (late British Central Africa) and the present paper relates to the native peoples living in that vicinity, Mankinga Yao. Many analogies in the customs of these two tribes will become obvious on comparing the present paper with that relating to the Angonde. It seems probable that most of these customs have a common origin and have evolved along similar lines, though in some instances, there is evidence that one tribe has adopted a custom from the other. The problem in many cases is very difficult to solve but where any evidence of value on such points is forthcoming, it is mentioned. 114

I wish to acknowledge my indebtedness for help in the preparation of this article to Dr. Meredith G. Sanderson for his assistance in etymology and for the rendering of many Chiyao words, to Mr. E. F. Cobrin for aid in working out numbers, and to Thomas Chiwaya, a native hospital assistant, for invaluable help in getting to the bottom of many customs. The very beautiful photograph of the 'Ching' ceremony dance (Pl. I) was taken by Dr. J. B. Denny of the East African Medical Service and is with his kind permission here reproduced.

Introduction. Concerning the ethnology of the peoples of Nyasaland, little has been written. Officials have, for the most part, been uncommunicative, and the large body of missionaries has taken slight advantage of the unique opportunities for study which early occupation of the country and close connection with its people offered them. In the case of the Yao, however, there are two brilliant exceptions, the Reverend Duff Macdonald[2] whose *Africana* remains an authoritative exposition of the customs of the Yao around Blantyre, and the Reverend Dr. Steinwitch,[3] author of the standard work on Yao linguistics.[4] Apart from these, some information can be gleaned from Livingstone's[5] account of his travels, from the writings of Sir H. H. Johnston,[6] and the Hon. H. L. Duff,[7,8] and from Miss Warner's[9] popular book written after a short stay in the Protectorate. Other references to the Wayao are too scanty to be of value.

For information concerning the Wayao of German East Africa, the reader is referred to Dr. Pilsbrey,[10] and to the published results of an ethnological research expedition to the

[1] H. S. Stanton, 'Notes on some tribes of British Central Africa,' (Journ. Anth. Inst., vol. 40, 1910, p. [illegible]).
[2] Duff Macdonald, *Africana or the heart of heathen Africa*, London, [illegible].
[3] Alexander Steinwitch, *A handbook of the Yao language*, London, [illegible].
[4] Since these notes were made in [illegible], Dr. M. G. Sanderson has published a Yao grammar and intends shortly to follow it with a Chiyao dictionary.
[5] David Livingstone, *Narrative of an expedition to the Zambesi and its tributaries and of the discoveries of the lakes Shirwa and Nyasa, [illegible]*, London, [illegible].
[6] H. H. Johnston, *British Central Africa*, London, [illegible].
[7] H. L. Duff, *Nyasaland under the foreign office*, London, [illegible].
[8] Now Sir Hector Duff, K.B.E., C.M.G.
[9] A. Warner, *The natives of British Central Africa*, London, [illegible].
[10] F. Pilsbrey, *Die deutsche Nyasa-und Rovuma-Grenze, Land und Leute, nebst Bemerkungen über die Kilimandscharo-Bahn*, Berlin, [illegible].

3:Stanmo D-5 (ca. 1912) 1922 FT7 Yao FT7

114 southern part of that territory by Dr. Karl Weule. I have not had access to Weule's official reports but judging from Miss Werner's translation of his popular edition,[1] the book shows a good deal of evidence of inaccurate information, or perhaps it would be better to say, evidence of want of extensive observation, and all the strictures which his translator passes upon the book[2] are well deserved. I am inclined to think that much of what Weule describes in connection with various tribes including the Wayao bears witness to considerable modification by interminglers, and it may be interesting to compare his account of Yao customs with my own.

Duff Macdonald,[3] then, remains the one author whose writings are of value to the student of the Wayao of Nyasaland, and one cannot help feeling that the ethnological character of his book suffers from the attitude which he, in common with most missionaries, takes in regard to many native customs. I believe that if missionaries, instead of turning away their faces in horror, had regarded these practices with an open mind, they would have found that their veiled statements were exaggerations of the truth, and that the old social code of the Yao native would compare favorably with the order of things in most civilized countries.

Morals are after all only the laws that regulate the social welfare of a community and there can be no theoretically perfect code of morals which does not take into consideration the living conditions of the community to which it is applied. Before the ties of custom which bound their social system were cut by European government and missionary influence, I think the natives of Nyasaland stood against their code of morals comparatively seldom. The present time is one of transition. Freed from old customs and beliefs, and with nothing of equal strength to take their place, the younger generation of natives has suffered and only time with just rule and efficient education can raise them to the higher moral standard which European influence strives to impose upon them.

The old order is passing rapidly and I therefore make no apologies for recording my observations, since the time will soon come when the things I speak of will be entirely forgotten. I find I have gone over much of the ground covered by Macdonald, but in most cases, I believe that I can add many details which may be of value to ethnologists.

101 **Divisions and History of the Wayao.** In regard to the question of tribal names, I think it is perhaps better to reserve the word *Wayao* to denote the whole Yao family and give to each section of the tribe the designation by which it is known to all its members. Thus the name Amangoche should be applied to the Yao people settled around Blantyre, while the Yao about whom I shall speak belong to that branch of the tribe known as Amaphinga, now living near Zomba under their chief, Malenya. These two sections, together with a third, to the north, the Amanindoga, contain all the Yao of Nyasaland. (Pl. IX)

[1] Karl Weule, Native Life in East Africa, tr. by Alice Werner, London, 1909.
[2] Ibid., p. 416-418.
[3] Op. cit.

3: Stanner D-5 (ca. 1912) 1922 FT? Yao FT?

That these several sections of the Wayao differ in many respects may be seen by comparing the Amangoche of *Africana*[1] with the Amachinga of this article. I am not sufficiently conversant with the Amangoche to make a definite statement on this point but I am inclined to believe that after longer residence and wider knowledge, Macdonald would have found that some of his statements needed revision. Those whom he considered the "Yao proper" but whom I prefer to speak of as the Amangoche seem to have a considerable mixture of Anyanja, since their language contains many Chinyanja words and many of their customs are practically those of the Anyanja. I am of the opinion that the Amachinga may be regarded as more typical of the Wayao, and except when ambiguity might arise, I shall speak of them as the Yao. 114 184 [197]

The original home of this Bantu speaking people is uncertain; in historic times all the sections of the Wayao were originally grouped in that part of Portuguese East Africa around the hill called Chao, whence they probably derived their name, *Wa Chao* or *Wa Yao*. About the middle of the nineteenth century, as the result of inroads by neighbouring tribes of Abisi from the southeast, and raids by the Makwangala, a branch of the Angoni of Zulu origin, from the northwest, disruption of the Yao people occurred, and the divisions mentioned above, moved toward Nyasaland. The Mesenjiga branch settled for the most part along the eastern shore of Lake Nyasa but a sub-section known as Tambala Yao reached the west side of the lake. The Machinga made a settlement near Lake Chiuta under a number of old chiefs, including Malemya (Nalutumbu), Kawinga, Chenkwin, Kalimbuka, and Mazie. 175 167 648

The descents of the Makwangwala again caused the Wayao to move on from Chiuta to Newinga on the Mikoko stream. Here Malemya suffered another defeat at the hands of the Angoni; many of his people were driven off and taken to the neighbouring Angoni country where they were held in captivity for some time. Finally they were rescued by the enterprise of one of Malemya's old men, Kalungula, who went alone to the Angoni, saying that he wished to live with them and with his own brethren. One day, he asked the Angoni if they would like to see their captives dance, and when they assented, he called the Yao together, and clapping his hands to keep time, he began to sing one of their dance songs. Gradually he gathered all the Yao into the village open space, dancing and singing; then, keeping to the same air, he told them why he had come, using their own language which the Angoni did not understand. "Malemya, our chief, remains at the Mikoko stream. It is not far off. We must all join him again. Now dance for joy. If anyone does not return there, it is his own fault." Then, a few at a time, the dancers left the crowd and stole away into the bush and, as night came on, they all made off and reached Malemya's camp in safety.

Malemya's people were again attacked by the Angoni, and on this occasion they defeated their enemies. The Angoni retreated and skirting Zomba mountain, reached the Shiré

3: Stanton D-5 (ca. 1912) 1922 FT7 Tao FT7

175 River at Mpindi where they intended to settle. Here, an old chief, knowing that their presence would cause trouble, persuaded them by tales of many cattle far away on the other side of the river, to cross over, and there they remained.

167 Kawinga and Malenya, then, to avoid further raids from the north west down to the Upper Shiré River near Lake Pamalombe, Kawinga going to Mvura, while Malenya stayed on the east side of the river among the Anyanja, claiming friendship with them because they bore many of the same clan names. Later, Malenya moved up to the highlands about fifteen miles north of what is now Zomba, and Kawinga went to Chikala. Malenya was friendly with the Anyanja chief, Chenyani, who was of his clan, and was therefore able to buy from him for a red blanket all the country from the Likwenu stream to the Namadzi River, a district thirty to forty miles long. There he people settled.

[131] Kawinga was once again attacked by the Makwangwala from the north, but beat them back, after which they returned to the country whence they came — German East Africa near Lake Nyasa. The Angoni chief was killed in this battle, and the story goes that two Yao captives were told off to carry the embalmed body back to the Angoni country for burial. As they were not provided with food for the journey, the two men began to eat the corpse. After several days, this was discovered; one of the men was killed but the other escaped to tell the tale. These were barbarous days, and the Yao relate that after raiding a village, the Angoni would leave a pot cooking on the fire with the body of a child in it, well covered with beans, so that when they had gone away with their booty and the villagers who had taken refuge in the forest returned hungry, they would start eating the beans and then come upon the body of the child, and having eaten of the juices of a human body, they would have committed a terrible sin.

[726 260] The immigration of the Amachinga into the country around Mangochi mountain caused the Amangochi Yao settled there to move. They passed into the Blantyre and Mlanje districts, and invaded the country of the Anyanja. The chief, Malenya, known as Nakumadzi died about 1890, and was succeeded by his nephew, a sister's son, according to the Yao custom. This nephew, Wandolama, then took the name of Malenya.

In consequence of this succession, there was considerable bad feeling between Wandolama and the other aspirant to the chieftainship, his cousin, Kumtaja. The latter moved down to the plain below Zomba mountain to the south, where he gathered about him a band of friends and malcontents. Malenya decided to attack him and with this purpose, sent two messengers, Mwapili and Mpondola, asking Chikusi and his Angoni to come and do the job for him. Led by Nyamuka, Njoromali, and Kalanji, the Angoni came from the Shiré River opposite Blantyre, via Matapa. They attacked and routed Kumtaja who, owing to the thick country, managed to fall back with most of his people toward Lake Chilwa. Here he was rescued by his cousin, Chimvuko, a son of Nakumadzi, and father of my interpreter, Chonga, who ruled among the Anyanja. Afterwards, he moved to Mpindi on the Shiré where he built a stockaded village.

* Died July 16, 1924.

3: Stannus D-5 (ca. 1912) 1922 FT7 Yao FT7

After the defeat of Kumtaja, Chikusi and his Angoni routed Kumtumanja, a brother of Malemya, who had also been making a nuisance of himself. Kumtumanja, who suffered from a large hydrocele, is supposed to have lost his balance on account of this impediment, and fallen into a stream where he had stopped to drink and to have been drowned. 175 167 648

The Angoni still burned for more warfare, and Malemya, fearing that with his work done, they might prove a nuisance to him, turned them on to the Amangoche Yao around Blantyre. Thither they set off on a raiding expedition and returned to their own country via Chiradzulu. This raid took place in 1884.

During the next few years, Kawinga, who had always held a grudge against Malemya for having got ahead of him to the best country, occupied the chief with raiding and warfare. In 1891, Wandalama died, and was succeeded by Chimala, the son of his sister, Chiligure, and at the present time, he is the reigning Malemya.

It is of these Amachinga Yao under Malemya that the following notes are written. I have gone at some length into the history of these people in order to disarm criticism by those who, familiar with other sections of the Wayao, may not agree with all my statements.

Life History. Generally speaking, the life of the Yao native in the old days was full of ease spiced with the excitement of intertribal warfare. He cultivated his crops, kept a few goats and chickens, and relieved the monotony by hunting. Even domestic slavery was not a great hardship, nor did the Yao probably suffer from coast slave-raiding to the same extent as many other tribes. As children, they are wont to spend their days free from care, seldom reprimanded, and rarely or never physically chastised. During youth, the same easy lot is theirs, with the addition from time to time of a few small tasks; minor household duties for the girls, such as drawing water, sweeping the hut, and "minding" the baby, while the boys hoe or fetch and carry for their fathers in the village or in the bush. Left to their own devices, they play games,[1] dig out rats' nests, or shoot birds with bows and arrows. 181 857

Now, as formerly, when they are about five years old, the girls usually go to live with their grandmother who may thus have a number of children around her; or several girls of a somewhat more advanced age may sleep together in a hut dormitory. Boys of this age all live in a big hut called *upimba ja chachanda*, "the boys' dormitory." This is their quarters until one by one they leave to get married. The girl, similarly, remains in the girls' dormitory or with her grandmother until she is taken in marriage.

Puberty. The first interruption of this placid life of youth is the onset of puberty or the first initiation ceremonies.[2] Formerly, these ceremonies took place after puberty but of late years, as is pointed out elsewhere, they are performed much earlier. 881

Child betrothal. Bethrothal in childhood or before birth is not uncommon. A woman learning that some friend of hers is pregnant will arrange that if a girl is born, her son will marry the friend's daughter, or a man taking a fancy to a little girl will select her as his 584

[1] Vide index, p. 361. [2] Vide index, p. 348.

584 betrothed. In this latter case, the child lives with one of his wives and is brought up in his house.

881 When this girl first menstruates, she tells the man's wife who in turn informs her husband. He then goes out into the bush with his axe, while the wife reports to the young girl's mother and to the man's female relatives. The girl is put to rest on a mat in the hut, the women remaining with her after shutting and fastening the door. The man, meantime, cuts a strip of bark, hammers it out into a piece of cloth, and puts the cloth, wound round and round the stem of the tree from which he has taken it, on the roof of the hut where the girl lies. The first passer-by who notices this sign, spreads the news; then all the women in the village assemble and trill with their tongues to show their joy, while the women in the house sing.

Until the girl's menstrual period is over, the old women relatives sleep each night in her hut, and instruct her in the taboos relating to menstruation. The front door is kept closed, and exit for purposes of nature is made only through the back door. When the girl is up again, the fire in the hut is extinguished, the bark-cloth which she has worn and her sleeping mat are rolled up and put away in the veranda-room, and the girl, having procured clay, replasters the floor of the entire hut. A woman then brings fresh fire from another hut.

841 At subsequent menstrual periods, there is no ceremony. The girl, as is the custom of all women at such times, must sleep on a mat apart from her husband. Sexual intercourse is strictly forbidden under penalty of dire sickness. For the same reason, no menstruating woman may put salt in the food, etc. Until the girl's first menstrual period is over, the man to whom she is betrothed stays in the hut of another wife. Later, he may cohabit with the girl.

881 If the girl has not been to her initiation ceremony, *Chiputa*,[1] on returning to her hus-
833 band's hut after this ceremony, the first coitus takes place in the veranda. It must be incomplete, so that ejaculation takes place after withdrawal and the semen falls upon her cloth. This should be taken by the girl to some of the old women in the village who report on the proceedings. Should withdrawal not have taken place, the man is considered bad and the girl, unless doctored, may sicken. Later, ordinary cohabitation is allowed. This species of ceremonial coitus is called *Kususe mauta* or in Chinyanja, *Ku-tapa mafuta*, "to roll away the oil," referring to the oil with which the girl was anointed at *Chiputa*. A girl who has no betrothed, on returning from *Chiputa* to her grandmother is given medicine similarly to prevent her sickening.

584 *Betrothal and marriage in adult life.* Apart from child betrothal, when a man seeking a wife, sees a girl he fancies, he talks the matter over with his brother, uncle, or some friend, who then goes and makes overtures to the girl's uncle or brother, her guardian or *sponse*[2] as he is called. The *sponse* corresponds very closely to our idea of a god-parent; he may be called the sponsor. The word "surety" is used by Macdonald.[3]

[1] Vide Index, p. 288. [2] *Sponse* is a word adopted from the Chin. *Nhuma*.
[3] Macdonald, op. cit., vol. I, p. 112.

3: Stannus D-5 (ca. 1912) 1922 FT7 Yao FT7

If the suitor receives a favorable reply, he informs his father and the elders of his village and then goes to the girl's village where he begins to build a house and spends much time performing duties for the girl's parents, such as hoeing. If, after a month, he is approved, the girl's people send a messenger to the man's village, asking, "Have you missed anyone from your village?" The answer is, "Yes, So-and-So," to which the reply is given, "Well, he is here with us." The man's people then arrange to come to the girl's village on a certain day. 584

On the appointed day, the two sponsors (*ngwewe*) on each side, meet in the village open space and being assured that there is nothing to prevent the marriage and the man and woman being willing, the tie is made. There is no formal ceremony or token of marriage between the man and woman. Porridge is cooked for the sponsors and a fowl provided. The back of the fowl is broken by the elder sponsor as a sign of the compact. The man is exhorted by his sponsors to be a credit to them in his new village, while the woman is told by her mother and her aunt that they expect her to live an exemplary life. The man's chief sponsor tells him that no longer is he a member of his own village, but belongs to the girl's sponsor, and the converse is told to the girl. Hereafter, in all matters relating to them as married people, the girl will consult her husband's sponsor and vice versa. The elder sponsor on both sides is called *mpupo wulugona*, borrowing from Chinyanja, "a log lying down," and is usually an uncle; the junior is commonly the brother of the bridegroom. 585

On leaving the girl's village, the *mpupo wulugona* will say, "You will see me no more in this village but this, my younger companion; if you see him, you will know he comes from me." The sponsors' responsibilities last so long as the pair lives, unless they separate for some reason. Thus, should the husband's goats die or should he lose his axe, the woman reports to his sponsor. If the husband kills an antelope, the sponsors receive some portion of the meat. If a village is to be moved, the inhabitants consult the sponsors of every married couple. In this way, the sponsors become the repository of all the events of the married life of the husband and wife and in case of any dispute or untoward event, theirs is the accredited testimony on family matters. The account given by Macdonald,[1] I venture to think may be incorrect.

Should the *mpupo wulugona* die, the junior sponsor takes his place and a new junior is appointed. The new *mpupo wulugona* sends a message to the other party's *ngwewe* telling him of the change, at the same time presenting him with a fowl. As he may be acting for a number of people, he may have to distribute several fowls; later, he visits his confreres.

Following the marriage compact and the departure of the *ngwewe*, the married pair go away quietly to the house the man has built for his wife, or she may wait until evening and, if she is shy, she may be accompanied by an elder sister, or may be sent with food for her husband. Consummation may not take place for a day or two, after which the hum- [591]

[1] Macdonald, op. cit., p. 138.

3: Stannus D-5 (ca. 1912) 1922 FT7 Yao FT7

585 drum of her married life begins. The man and woman live together peaceably enough as
a rule, each attending to his own sphere of work. The man builds the house, the woman
462 made the floors; she sweeps and cooks, she is the hewer of wood and drawer of water. The
man hunts, fishes, makes mats, baskets, the grain store, game traps, and bark-cloth; he
looks after the tobacco, and makes the snuff, while his wife brews the beer. He it is who
fashions the gourd vessels and carves the spoons, while the woman is the potter (Pl. III, 4)
and pipe-maker. Together they hoe and together they harvest, but to the woman falls the
monotonous drudgery of pounding and sifting the corn for flour.

842 The Yao have a custom like that of the Anyanja. A sister brings to the house of the
newly wedded pair a log of green wood from a mbanga tree which is very hard; the log
[522] may be two feet in diameter and four feet long. Should the bride not become pregnant
before it is burned away, the husband is laughed at and they may both be teased by having
[558] many logs brought to the house. A man who has no children is much despised and there
is a saying, "He must have eaten some ground-nuts," punning on the word for a thick-
skinned variety of ground-nut, *chimbuwila*, a word which also means sterility. An impotent
[837] man may, with the consent of his wife, introduce some male friend into the house, any
children born in consequence being claimed as the husband's. He usually chooses some
friend from a distance to obviate any attachment springing up between him and the wife.
Two married couples may, all consenting, exchange consorts for the night, but they never
live together like this for long periods.

582 There is one well-defined marriage taboo; a man may not marry a woman of his own
clan. In the old days, he was also restricted to his own tribe, except in the case of slave
[611] wives and wives by capture. Since the clan is inherited from the mother,[1] a man may not
marry the daughters of his maternal aunts, but he may marry his other female cousins.
[587] He may not marry two sisters nor a deceased wife's sister; neither do two brothers marry
two sisters.

595 The number of wives is limited only by the husband's ability to provide for them. In
addition to free wives, a man might formerly have a number of slave wives. The head wife
is called *kuapsto*, the other wives, *mapsumba*. The word given by Macdonald, *akuapsto*,[2]
meaning the junior wives, is a Chinyanja word and, I think, wrongly applied.

582 It has been said that a man always marries into the village of his wife. For this reason,
[842] female children are always prized as it means an increase in the number of able-bodied
men added to the village. In rare cases, the wife might be taken to the husband's village,
[583] as is the Anyanja practice.[3] This, of course, is true in the case of chiefs and headmen. Here,
we may also note that no payment is made for the wife and no dowry is received with her.

584 To revert to betrothal, occasionally the sponsors will not agree to the marriage and a
843 runaway match takes place, but in the end, the marriage is usually regularized by the
sponsors coming to an agreement. If, however, the woman has in the meantime become

[1] Vide infra, p. 263. [2] Op. cit., p. 134. [3] Stannus, op. cit., p. 305.

3:Stanaus D-5 (ca.:1912) 1922 FT7 Yao FT7

pregnant, the meeting of the sponsors will have to be postponed until after the ceremony connected with her first quickening with child, *Lilíuo*.[1] This ceremony must be performed whether the girl is regularly married or not. One party cannot ask the other for permission that both ceremonies take place at the same time. The answer would be given, "You are asking me to kill two beasts with one bullet." In rare cases, the chief may sanction the marriage and *Lilíuo* ceremonies taking place at about the same time, i.e. the marriage is arranged before the child is born. 584 843

Widowhood. A widow is considered unclean for a period after the death of her husband. She wears a band of palm-leaf or string around her forehead. When the period is passed and some man wishes to marry her, arrangement is made with some other man to cohabit with her for payment; she is then said to be clean and can go to her prospective husband. This ceremony is called *kutema ngwji*, "to cut the strings," or in Chinyanja, *ku-dula mlese*, "to cut the palm"; unless it is performed, the new husband will sicken. The man introduced for the purpose is called by the Yao, *Ntuwa*, the "hyaena," "he who comes by night." 589 587 [833]

Divorce. From time to time, married people disagree and one deserts the other. If the woman leaves the man, he has a claim against her and the man to whom she goes for all the clothes he has supplied her with during their married life. The husband usually sides with the wife's relatives and arranges that they look after the children; he does not claim them. When the husband and wife mutually wish to separate, they both meet with their sponsors and everything is duly arranged. The husband will give his wife an arrow, saying, "*Mpanko* (the arrow)," meaning, "If I come back, may it kill me." The place of the arrow may be taken by a bullet or any other object, even a piece of grass. The man will add, "*Sunka, sunka, na likowe!* (rattling, rattling, it is a rat!)," inferring that if his wife hears something rattling in the house, it is a rat, not himself trying to come back. There is no definite payment of compensation. If the woman marries again, she presents the "arrow" to her second husband as a sign that she has been freed from her first marriage; without this token, no man would marry her. 586

Actual adultery was in the old days very rare owing to the strict enforcement of rules, and the case of a woman demanding divorce on account of the adultery of her husband formed a *cause célèbre*. The case heard by the chief would last for days and hundreds of people would come to listen. Neighboring Anyasja pleaders would be invited to speak and great excitement prevailed, as these latter would be accompanied by their villagers, who, to the accompaniment of continuous drumming, would sing, "*Mbeuula ewahadwa n'ulende*,[2] (The [illegible]-buck has run his head into the net)," while they ran about running their heads into their game-nets. 684 586

Other causes of separation are neglect of duty, sterility of the wife, and habitual death of the children born. 586

[1] Vide infra, p. 256.

[2] Chin.

843 842 *Pregnancy and childbirth.* An event of the first importance in the Yao world is the first conception or rather the "quickening" with the first child, *Lítiso*; this is described below, together with the other ceremonies of the *Unyago*.[1] After the ceremony of *Lítiso*, the period of waiting until the birth of the child passes without further event. A point of medical interest is that native women suffer in many cases from "morning sickness" during pregnancy. That they may have perverted appetites is also recognised, grain husks [171] and crabs being among the things most commonly desired. As the Anyanja,[2] the Yao believe that the child develops from the semen of the male, although the growth of the child is in some way connected with the mother.

844 When labor commences, the woman retires to the bush a few hundred yards away from her house, attended by some friend, seldom a midwife, and never by her own people, though the mother and the mother-in-law will probably be near the spot. If labor is not completed by evening, they return to the house and the birth may take place actually within its walls. [171] The attitude assumed in labor is the same as that adopted by the Anyanja,[3] the patient semi-reclining in the arms of another woman who sits behind, grasping her belly. The vulva is smeared with a decoction made from the bark of the *mpoa* tree as a lubricant, but no other help is given. *Kumkuli* is the name given to the place of confinement; *m'huli* means the house where the woman remains for a period after the confinement. The Yao recognise the protruding bag of amniotic fluid and call it the "oil-gourd". "*Chisani chiko-sicha?* (The oil-gourd, has it broken?)." They wait until the placenta is delivered before dividing the cord. This is done with the sharp edge of the outer covering of a maize stalk or sugar cane; a knife is never used. The section is made near the placenta or half-way between it and the child, after tying the proximal end with a bark string.

The woman who receives the child at birth is the *ambusanga*, friend or godmother. If the infant is born in the bush, she carries it back to the house whither they go as soon as labor is completed. The mother herself, unless she is very ill, goes out shortly afterwards and buries the placenta in the ash-heap, using a stick to dig the hole, never a hoe.

After the birth, the mother and child must remain in the house until the umbilical cord 845 separates, during which time the husband does not enter, though he may come to the door to look in at the child.

The day on which exit from the house is made, the floor is entirely replastered with mud. [852 553 302] The baby's head is shaved and a cross is made upon it with *ngusu*, a kind of red pigment. The husband may then receive the child and in the case of a first-born, it is he who gives it its name; other children may be named by the *ambusanga*, the mother, or the aunt.

When the mother leaves the house to appear in public, the *nakunga* who put her *lítiso* on,[4] removes it.

So long as the infant remains in the house, care must be taken as to persons allowed to handle it. A woman who has recently had a menstrual period or coitus with her husband,

[1] Vide infra, p. 274. [2] Stannus, op. cit., p. 318. [3] Ibid. [4] Vide infra, p. 274.

3:Stannus D-5 (ca. 1912) 1922 FT7 Yao FT7

or a girl who has just returned from *Chipuda* must not touch the child, as it is said, "Her body is hot and would give fever to the child." To guard against such a happening, some "clean" woman, after handing some beads to the mother, will ask to be allowed to take the infant. This indicates that should it sicken, the beads will pay the medicine-woman who comes to cure it. The mother and baby are simply washed in water and are not treated with medicine, unless meconium has been voided before the child was delivered.[1] If the infant dies before it is presented to the outside world, it is disposed of in the same way as a stillborn child, i.e. buried in the ash-heap. About the tenth day, the baby is adorned with a girdle of beads and two little pieces of stick obtained from a medicine-woman to make the infant grow fat. 846 845 766 856

The length of time during which the father and mother refrain from cohabitation after the birth of a baby varies greatly according to circumstance. Four months is probably a minimum, while two years, during which the woman suckles the child, is the common interval. After the first coitus, the man and woman wash themselves and the baby is bathed in the same water to prevent any ill coming to it. 833

Suckling often continues much longer than two years. If the mother dies, the child may be suckled by the grandmother, an aunt, or some other woman, but the breasts must first be treated with medicine or the child would die 853

A child born breech first is called *salanga*, a word which is also used to denote a variety of domestic fowl which always has the appearance of having its feathers ruffled. A child who dies before the father and mother have resumed sexual relations is buried in a graveyard apart from that of adults. The grave, dug with sticks, not hoes, is very shallow, and when it is filled in, a heap of stones is made above it. Only women attend the burial. A deep grave would cause the mother to go on losing children at an early age. The body of such a child is called *hinuu*, "hyaena." 845 766

A woman dying undelivered is placed in the grave in the usual way and then, before filling in the earth, one of the grave-diggers descends into the pit, cuts through the enveloping shroud, and incises the abdomen. One end of a long bamboo stick or reed is inserted in the incision and the other end is brought out to the surface of the grave. If this were not done, "many would die in childbirth." 844 766

Twins are not killed by the Yao but are well treated and always cared for equally. They are given similar clothing and food.[2] There is a story that the mother of Nkwamba, 845

[1] *Chipuda*, vide infra, p. 286.

[2] (T. A. Werner, 'Among the Congo Cannibals, by John H. Weeks, London, 1913, a review,' (Man, vol. 14, no. 13, 1914, p. 14).

I take this opportunity of referring to Miss Werner's review in which, speaking of twins, she says, "They are always among the Anyanja given the names *Magoli* and *Nyama*." *Magoli* in Chinyanja refers to a kind of musical instrument and the Chiyao meaning is "ornament palm." *Nyama* is a Chiyao word which certainly means "the back." It is sometimes used of the second born twin but does not occur in Chinyanja. I have never heard of twins either among the Wayao or the Anyanja spoken of by these names. A mother carries the first born on the right arm and the second born on the left, but, so far as I know, she does not give a duplicate greeting nor make a habit of eating equally with both hands. [114]

3:Stannus D-5 (ca. 1912) 1922 FT7 Yao FT7

845 one of Malemya's men died, after giving birth to quintuplets, some thirty years ago. Deformed children are buried alive. A large number of children is always hoped for and where polygamy is practised, some families are of considerable size, although the mortality [165] among young children is very high. It is, of course, very difficult to state the child-bearing period among natives. It does not start so early as is commonly supposed, and I think the menopause is found within about the same limits as among Europeans.

Death. Natives of Nyasaland live to a good old age. That such is not the case I have 761 found to be one of the many fallacious beliefs concerning natives which should be relegated 165 to the realm of exploded theories, as I have pointed out elsewhere.[1]

Death in old age is recognised as a natural event but apart from this, all sickness and [754] death were formerly and are still to a large extent looked upon as the result of the machinations of some person, an idea which forms the outstanding feature in their belief in witchcraft, *uswi*.[2]

763 Here I shall mention the ordinary customs in the case of death. During the last hours of a mortal illness, a man is tended by his wife or wives; the head wife sits constantly supporting his head on her lap or against her breast. A woman is similarly tended by her mother, sisters, and friends. As unconsciousness sets in and the extremities become cold, they say, "His spirit has gone and only the heart remains alive."

The native does not like the idea of lingering on and a man on his death-bed will say to his sons, "Now watch me that I die quickly." He may take medicine to help him over that time or he may give his sons instructions as to what to do. Should a man linger unconscious for a long time, friends will ask his sons, "Did he give you any instructions?" If he has done so, the sons will then carry them out. This perhaps consists of bathing themselves in medicines left by their father, while they stand on the roof of his house. Sometimes, the natives say of a lingering case, "Ah, perhaps he has eaten of a tortoise's heart!" [825] knowing the phenomenon of the tortoise's heart and believing that by partaking of it, the same property can be conferred on the heart of a man.

764 When death is manifest, the body is covered with a cloth by a brother, a son, or some other person in attendance. The eyes are closed, the mouth shut, and at the present time, [1197] the body straightened out. This, however, is a recent practice copied from the Anyanja, Europeans, and Mohammedans.

764 News of the death must be sent to the chief, and a messenger goes to his village where the chief and his people sit in the village open space. He carries a fowl in his hand. The 203 present of a single fowl always denotes bad tidings. One of the chief's men, seeing the stranger approach with the single fowl, will jump up and take the bird. He is joined by the others and they go away to the cross-roads where they kill the fowl, pluck it, cook it, and eat it. In the meantime, the messenger delivers his news to the chief who will produce from his house about eight yards of white calico; if the deceased has been a much respected

[1] Hugh S. Stannus, 'The life-span of negroes', (Lancet, April 11, 1914, p. 1063). [2] Vide infra, p. 288.

3: Stannus D-5 (ca. 1912) 1922 FT7 Yao FT7

 764

person, he may also give a goat. The calico is to wrap up the body of the dead, the goat 203
is for the undertakers, *swile*.[1]

Until eight or ten years ago, the Wayao buried their dead in a posture of complete 764
flexion. The preparation of the body after death is carried out by friends from a neighboring village who volunteer for the service. They are known as *swile*, (sing. *swilo*). [767]
Macdonald[2] thinks the word originally meant relatives; it has essentially the opposite meaning now. The corpse is washed in ordinary water and no anointment is made. The limbs, formerly, were then flexed on the body and at all the joints. The clenched hands were placed under the chin of the bent head or the hands were spread over the face of the flexed head, while the legs were tightly bent at the knees and brought up close against the abdomen. The corpse was securely bound in this position and adorned with a loin-cloth of bark. The body of a man found stiff and extended was a source of great trouble. Water was heated, and the body bathed until it was as relaxed as possible. As much force would then be applied as was necessary to gain the required degree of flexion, the bones often being broken in the process.

In the case of a woman, her female friends put on her bark-cloth loin covering, but the [767]
washing and trussing up of the body were usually done by men unless there were some women particularly skilled in the operation.

The flexed body was then set up on the deceased's sleeping mat within the hut, and from time to time, so long as it remained exposed, it was washed, people coming from other villages to offer their services for this task. Watchers sat continually by the body, the wife and perhaps a brother on either side, while others slept in the hut to take their turn later. The rest of the mourners sat on the veranda about the door.

As soon as the *swile* had finished their work, wailing began, started by the wife and car- 765
ried on by all the women of the village and the women relatives from elsewhere. Wailing continued all day until about ten in the evening, and then started again between two and three in the morning. This went on for three or four days or was intermittent for a longer time, always recommencing with the arrival of a party from another village. I have never heard of flour being put on the heads by Yao mourners, as mentioned in *Africana*.[3]

News of a death was always sent to all the relatives, and burial might be delayed to [764]
allow for the arrival of those from a distance. Under such circumstances, the body was enclosed in a casing of bark, the ends being closed by bamboo pegs. Exaggerated signs of grief were sometimes made by the mourners who beat their breasts with their hands while they knocked their heads against the ground or a wall, but the Yao did not indulge in the excesses of the Anyanja near Lake Chilwa who practiced a kind of flagellation, the wailers within the house meeting any new-comers at the door and beating them with sticks. This treatment was not resented. Women alone did the wailing; a man indulging in such expression would be laughed at. His part in the old days when the natives possessed firearms was

[1] Vide infra, p. 264. [2] Op. cit., vol. 1, p. 102. [3] Ibid.

3: Stannus D-5 (ca. 1912) 1922 FT7 Yao FT7

765 to fire off his gun as long as his powder lasted. During the period of mourning, drumming
[534] went on continuously, *chindimba* being played on the three small drums called *ichoma*.

With the exception of the flexed attitude of the body, the foregoing description is a correct account of what happens today. The body is now fully extended.

The *ewile* are two or four in number, although other friends may assist in all their ser-
767/ vices. On about the third day, the *ewile* sew up the body in bark cloth, completely envelop-
764 ing it; a bamboo needle is used and left sticking in the cloth at the last stitch. The body is then enclosed in a mat slung on a pole, and carried from the hut to the grave. First, the procession makes a round of the village, passing by all the houses which the dead man used to visit, and over all the paths he used to cross. His children and those of his relatives under seven or eight years old gather in the village, and throw pieces of charcoal toward the body as it passes, "so that they shall forget the dead man," or run after the corpse, while some one sprinkles medicine over them.

764 As the procession leaves the village, it is headed by the drums playing *chindimba*, but
[534] after a few hundred yards, only the *ching'anga* drum, now called *chilonda*, beats time for a short distance; the procession then goes on quietly. Following the drums, walks the mother or another relative carrying flour with which the grave will be marked out. Behind this mourner, the body is borne by the *ewile*. The *ewile* are always the first to carry the body, but are later relieved by other friends of the deceased; no one would ever ask to be relieved.
[114] After the chief mourner, follow the other relatives and friends, the men first, the women behind. Boys just back from their *unyago* attend to learn the customs. All the relatives of the deceased go to the burial, contrary to Macdonald's account.[1]

In this order, the procession reaches some tree thirty or forty yards from the place of burial where the corpse is put down in the shade, *mtula*, "resting place", and while the women and part of the men watch beside it, the *ewile* proceed to the burial place. They cut branches from a sacred tree, and strew them on the path. On approaching the appointed spot, they clap their hands in salutation, asking that the burial ground be opened to them.

The head *mbile* chooses the site where the grave shall be dug, after which the mourner marks out the limits with the flour she has brought. In the days when the body was buried in contracted posture, a circular grave was dug just big enough to allow two men to work in it. Eight feet was the usual depth but this was decided by the deceased's *nguwe*, if he were living, otherwise, by his near relatives. In the east side of this circular well, a cave was excavated, just large enough to admit the contracted corpse. When all was prepared, the body accompanied by all the mourners, was brought from *mtula* to the graveside. The chief *mbile* with a friend of the man's family and one of his wife's, standing in the grave received the body and placed it in the cave, resting on a mat and covered with bark cloth. The body lay on its side with its back toward the well, and its face looking

[1] Op. cit., vol. 1, p. 101.

3: Stannus D-5 (ca. 1912) 1922 FT7 Yao FT7

764 toward the east. After adjusting the body in its place, the *mbile* would tear open the shroud over the ear, and pour on to the pinna some powdered beads to be used by the dead man as money in the hereafter. Except in the case of chiefs, no objects were buried with the dead, [114] contrary to Macdonald's description [1] of the Amangoche. The pole on which the body had been carried to the grave was broken into bits and together with any stick that had been used to measure the body for the cave, was placed in the grave. The opening into the chamber was then closed by a mat fastened over it by pegs and supported by pieces of wood. The *ambile* clambering out of the well, pushed the first earth backward into the grave with their elbows, after which the rest of the earth was shovelled in quickly, and a heap made at the surface. The ground about this mound was swept clean with a bunch of leaves by some one walking backward so that no footprints were left; the bunch of leaves was thrown on top of the mound. No medicine was put in the grave, nor were the household [114] utensils placed on the mound, as Macdonald states concerning the Amangoche.[2]

For some years past, the type of grave made among the Yao has resembled that of the Azyanja,[3] a long pit with a chamber scooped out along the whole length of one side. In this, the corpse is placed in a fully extended position so that it lies on its back with the feet toward the east. With this exception, the account given above holds good for the present day. The method of suspending the corpse in a mat slung on forked sticks within the grave, mentioned in *Africana*,[4] is not found among the Amachinga Yao.

764 On the way back to the village, two *ambile* lead, followed by the men, the women, and lastly, by the other *ambile*. First, all wash, the men upstream, the women downstream; no 783 one may wash another's back. The hoes used in digging the grave are also washed; hoes are never washed on any other occasion.

During the funeral, some responsible old man is left in charge of the village with several younger men to assist him. Just before the return of the funeral party is expected, the old man sends one of the younger men to set medicine at the side of the path along which the [824] mourners will pass. This medicine is made from the bark of the *mpingo* tree and is used for purification; it is placed in a sherd. Each person as he arrives at the spot squats down, dips the little finger of each hand into the medicine, and passes the fingers between the little toe and the third toe of the corresponding foot. The last comer throws any remaining medicine into the bush. As they near the village, a gun is fired and wailing is resumed for a few minutes, after which it ceases altogether. The old man who has been left in charge of the village always inquires whether all has gone well at the interment.

765 That evening, the time is passed in singing *chindimba*.[5] All those who attended the burial, sleep in the village, and if the deceased's relatives can afford to provide the necessary food, all remain in the village for a number of days equal to the period which elapsed between death and burial. Sometimes, when burial was long delayed, the mourning party

[1] Op. cit., vol. i, p. 107.
[2] Ibid.
[3] Sanson, 'Notes on natives of British Central Africa,' op. cit., p. 313.
[4] Macdonald, op. cit., p. 108.
[5] Vide infra, p. 267, 270.

765 might not break up for a week, but the practice was often modified to some degree, people returning to their homes during the day and coming back each night to sleep in the deceased's village. At the present time, there is a tendency to cut the proceedings short, and the mourners generally disperse on the second day after the funeral. This period of waiting is usually whiled away by playing and singing *chindimba*.

768 On the day before the company leaves the village — now, often on the day after the
765 funeral — the ceremony of shaving the head takes place. The *ewile*, assisted in the case of a large party, by those who helped at the burial, shaves the heads of all the dead man's relatives. When this is completed, they begin to tear down the deceased's house. The grass from the roof, with the hair removed from the heads of the relatives, is carried to the cross-roads and burned. The walls of earth are torn down and made into a heap; on the top, a stick is raised, and at its base is placed the dead man's snuff box. Sometimes a cactus euphorbia, *mpachi*, is planted on the mound and cassava round about. The snuff box is kept replenished with snuff. This, with the cassava, is reserved for the *ewile*; no one else may partake of them.

While the house is being pulled down, the chief *mbile* ties around the neck of the widow a single string of beads or a small piece of calico, *ng'onji*. After the house has been demolished, the *ewile* return to their homes and on the following morning, everyone else departs.

767 The position of *mbile* is a strange one. Every man in the course of his life probably acts as undertaker for some friend; many have probably performed the service several times. He receives no regular payment, but beads, and, nowadays, coins are often thrown into the pot of water with which he wets the heads of those he shaves after the funeral, and he has the freedom of the village in which he has so acted forever afterward, the degree of freedom being determined by the distance which he has travelled to officiate. When Wandalama died, a headman named Chisui from Makanjila's on Lake Nyasa, over a hundred miles away, acted as one of the *ewile*. The occasions on which he revisited Malemya's village are
[431] well remembered, as they were marked by much frolicking and some obscenity. He was the recipient of enormous presents of fowls, sheep, and anything else he cared to take, and having commandeered men from the village to carry these gifts for him, he would leave, accompanied by all the people, yelling and shouting their joy at seeing him again.

Any fowls or other provisions that friends may present to the deceased's relatives at the time of the funeral to help defray expenses are given to the *ewile*; no one else may eat them. Some may be kept against the next death in the family.

A few days after the funeral, recourse is had to the chief to settle whether any action
768 must be taken in regard to the cause of the death. Some near relative of the dead man will
622 be chosen for this purpose; he must not be shaved by the *ewile* at the time of the funeral. The consultation takes place at some secluded spot outside the village. The chief always brings some one with him to witness what is said. On arriving at the appointed place, the chief salutes the unshaven mourner who is probably accompanied by other relatives, and

3:Stanner D-5 (ca. 1912) 1922 FT7 Yao FT7

them listens to an account of the circumstances attending the illness and death. The point at issue is whether there is any evidence pointing to death from unnatural causes which requires consulting a diviner. The chief practically always agrees with the relatives, and it is said that he will never press them to go to the mwitimupo unnecessarily. The case may end with this conference, or here may begin the long series of events described under *mwaal*.[1] 768 622

During the month subsequent to the funeral, certain taboos have to be observed. The widow may not bathe, and with the exception of the *mwile*, all who attended must refrain from sexual intercourse. At the expiration of this period, beer is brewed in the village, and all the friends and relatives are again summoned. This beer-drinking is called "the beer of rottenness," or "the beer of resignation." In addition to the beer, food is provided, and everyone helps himself without ceremony. *Chindimba* is sung and danced and at the present day, bands of trained dancers attend, including *ching'wengwe/ wengwe*.[2] A pot of beer is sunk into the ground, marking the site of the dead man's house. The night of *mwipute* [833] see husbands and wives reunited, and the widow may go through ceremonial intercourse with a man appointed for the purpose called *litawa* or *wabla*. Sometimes the widow refuses *litawa*, and is given medicine instead to cleanse her; her body is then no longer "hot" and likely to bring disease to those about her. A widow does not marry again for two or three years. A young man who loses his wife has no longer any standing in her village after *mwipute*. He is usually given a present, with the suggestion that he go elsewhere. After the death of an infant, the mother is considered unclean. She sleeps on a mat apart from her husband till after the ceremony of shaving, and then undergoes a ceremonial union with her husband — in which case he is called *litawa* — after which, ordinary cohabitation is resumed. If she has been a widow, or if the child was born "with disease,"[3] another man acts as *litawa*. 587 768

The morning following *mwipute*, all the fires in the village are extinguished. A fresh blaze is then kindled with the fire-drill, *kwenepa*, either in the chief's house or in some spot nearby, and from there, fire is carried to all the houses. The ashes of the old fire, the stones supporting the cooking pots, and the porridge sticks are taken to the cross-roads, and there destroyed. Everyone then shaves all his own hair, head, axillae, and pubis. [302] The custom of the second shaving by the *mwile*, described in *Africana*,[4] is, I think, an adaptation from the Anyanja. A year later, beer is again brewed, and all the relatives summoned to the village to partake of it. There is dancing, but no ceremony. 769 [372]

The Yao bury their dead in regular graveyards in wooded country, the thicker the forest the better, often two or three miles away from a group of villages. Different villages bury their dead in different parts of the burial ground; relatives are usually buried near one another. Graves are never revisited, and no one would enter a graveyard except at the time of a funeral, and then only after obtaining permission from the chief. Such spots are 764 769

[1] Vide infra, p. [illegible].
[2] Vide infra, p. 370 and Pl. I.
[3] Beer-drinking.
[4] Sherbrooke, op. cit., p. 111.
[5] Vide infra, p. [illegible].

3:Stanmus D-5 (cn. 1912) 1922 FT7 Yao FT7

769 supposed to be the abode of spirits. Except in the case of chiefs, the Wayao never make any structures over their graves, like the Anyanja grass shelters, and the present-day Mohammedan earth imitations of Swahili tombs.

766 Chiefs, and the more important headmen, are usually buried in their own villages. Over the grave, a grass hut with a veranda is erected; the hut is covered with mats, and guns were formerly set in an veranda posts. Guns and ivory used to be buried with the corpse

[967] but these Yao, I am told, never practised the barbarous custom of burying slaves with their chiefs. Information of the death of a chief was always conveyed to other chiefs by slaves who were kept by the recipient of the message.

Since the time of the old Malengya, the corpse of a chief always lies with its head in the direction of the old chief's grave. The grave is swept around, and the house pulled down as in the case of an ordinary man, but the grave-hut is rebuilt every year and never forgotten.

Since the burial of the dead is more or less correlated with the idea of planting seed from which progeny will spring, the natives will not bury a leper, believing that if they did so, leprosy would spring up all around them. Persons dying of an epidemic disease such as small-pox are dealt with in the same way. In these cases and in that of a man dying of ordeal poison, the body is enclosed in a mat and put up in a tree, a manner of disposing of the dead common among the Angoni and some Anyanja. Concerning death from dropsy, similar precautions are taken to those in the instance of a woman dying in childbirth,[1] and a tube is put down to the body from the surface of the ground.

A leper feeling that the end is near, will ask to be put in a hut built outside the limits of the burial ground. There, provided with water and food for a few days, he will wait to die near the graveyard wherein he knows he cannot be buried.

Anyone who is wounded with a spear or any other weapon is not taken into the village,

[968] but is kept in a hut in the bush. If death results, the mourning ceremonies differ somewhat from the ordinary rites and are much curtailed.

481 **Initiation Ceremonies.** Under this heading I propose to deal with the three ceremonies, *Lupondo*, *Chipoto* and *Litiso*. They are ceremonies of great importance in the life of the native and their educative effect for the good of the tribe is far reaching.

At *Lupondo* (*Wdapdo*) the young boys attend; at *Chipoto* the young girls go through their initiation and a side ceremony for young married men takes place, while *Litiso* celebrates the first quickening with child. All the ceremonies are included in the word *Unyago*. Macdonald in *Africana* while referring to "the mysteries"[2] gives scant information about the ceremonies and has, presumably, without much knowledge of what goes on, condemned these customs like many others as furthering "absurd superstitions." He has failed to recognize that they are ceremonies when a large amount of useful advice is imparted, good manners are inculcated on, and tribal custom is made known. Sexual questions are dealt with in these mysteries, and, though mixed up with a large amount of superstition, a

[1] Vide supra, p. 200. [2] Op. cit., vol. II, ch. I.

3: Stanner D-1 (ca. 1912) 1922 FT? Yao FT?

code of morals is imported which is far reaching for the social welfare. Macdonald makes the statement that " when a girl is initiated, she must find some man to be with her on her return; otherwise she will die."[1] Speaking with reserve as to what happened among the Amangandas amongst Mwalyoro Mbaloma thirty years ago, I believe that no such practice is or was part of the Machinga Yao ceremonies. I have heard similar stories from other Europeans but I am inclined to discredit the whole idea as a practice among any section of Yao. Of the Anyanja, I cannot speak with the same assertion. Similarly I believe that the practice of artificial dilatation of the vagina is foreign to the Yao though possibly introduced in some places from the Swahili.

At *Lapanda* and *Chiputu*, the youth have to undergo a good deal of hardship which is all for their benefit, but year by year, as civilization progresses, greater numbers forego these ceremonies. Their manners and morals suffer in consequence, and one is forced to acknowledge with the " old people " that the younger generation, decked in European clothes, with an air of smug self-conceit, no longer shows that decorum and self-respect which characterize the older, unsophisticated natives. My experience with regard to the attitude of natives to their initiation ceremonies differs from those related in *Africana* and I am afraid that Macdonald's native friends[2] were laughing at the inquisitiveness of the white man and not at their own experiences.

In the *Journal of the Royal Anthropological Institute* for 1913,[3] Dr. Davey and I gave a short account of part of the ceremony at *Lapanda*. Since then, through the friendliness of some of the chiefs in Zomba district, I have been present at several more ceremonies. I have collected a number of fresh observations and made a complete set of sketches of the tapage or images in relief made on the ground at one of these ceremonies. I have also a complete account of the boys' ceremonies from a celebrated master of ceremonies or m'waleko as he is called, named Mlomala (Kanyika) of Che-chamba, in his own words, with his own songs. In writing down the songs, I have simply recorded the words, without giving the many full and partial repeats, and I have never attempted to score down the air to which they are sung.

In the account given below I shall follow Mlomala's practice, giving such variations as I myself have observed. It will be understood that each m'waleko has his own way of doing things so that there may be many variations in detail.

Lapanda: Every year, a certain number of boys in a group of villages reach the age at which the ceremony is commonly performed. In response to requests made by the village headmen, the chief appoints a date on which the tapage shall be held; this is usually towards the end of the dry season (September) but before the long grass of the bush has been burnt, as this affords the ceremony privacy to those taking part.

[1] Op. cit., vol. 2, p. 100. [2] Ibid., p. 100.

[3] H. S. Stanner and J. B. Davey, "The initiation ceremony for boys among the Yao of Nyasaland", (Jour. Anth. Inst., London, 1913, vol. 43, p. 130-135).

[48] The chief, having appointed a day on which the ceremonies shall begin, sends a messenger with a fowl to a medicine-man whom he asks to conduct the ceremonies. The medicine-man is called *n'mishila* "he of the tails." He carries his medicines stuffed in the tail-skin of a gnu or zebra and we shall see that his tail or tails play a very important part. Having sent word back to the chief of his acceptance of the invitation, he gets his wife to prepare some fresh castor-oil with which he will remake his medicines, and sends out the boys of the village to collect firewood. A big bonfire is made and dancing goes on all that night in his village. Early next morning he returns to the door of his hut where his wife hands him his "tails." He then immediately departs for the village of the chief. His wife wails with her tongue, this being the sign of his departure, and dancing men, some friend (often his brother) who acts as his chief assistant, his wife, and others will go with him.

[50] [53] He signals his approach to the chief's village by singing:

"*Ee* *ewel'lo* *ngenin,* *ngenin'ini* *Ungenikel'*"
"You at the village! I don't be long!"

As he enters the village, all the women hail his arrival by trilling the tongue (*lu-lulula*). He goes straight to the open space in front of the chief's house where the chief meets him. The chief immediately goes into his house and producing a cloth, gives it to the *n'mishila* who then places his "tail" on the ground, (*ubhala*, "things put down"); these are the signs of the compact. A house is given to the *n'mishila* wherein he may rest and sleep.

That night, all the mothers of the boys who are to undergo their initiation, now called *wali* (*ulag. ewali*), prepare flour for the morrow. Early the next morning, the *n'mishila* visits the place where the pounding is going on and collects a little flour from each woman's basket into a small basket he himself carries.

The chief then gives him a cock and a hen, an axe and a hoe; with these he goes off accompanied by the fathers of the *wali* to the spot where *Lapunda* will be made. Arrived there, he first points out the spot where his own hut is to be erected. This is quickly built, followed by the shelters for the *wali*.

The cock and hen are then killed and cooked, also some porridge; the entire fowl is cooked; the liver is not cooked separately. When it is ready, the *n'mishila* takes a piece of the liver from the pot and some porridge from the other pot together in one hand and then throws them into a little hole where his "tail" has been resting. At this spot, *Lapunda* is made. The *n'mishila* then partakes of both again and eats; after he has finished, the other men eat.

[54] After the building of the shelters is finished, fire-wood is collected. On the roofs of the grass shelters figures of animals in grass may be strung up on posts, but they have no definite significance.

In the meantime in the village, the chief has had *ubwali* (mealmeal flour) prepared. It is made from millet by his head wife, who must not be near a menstrual period.

When the sun sets, all the boys to undergo the ceremonies (*unali*) together with their sponsors or guardians, *ahomwi*, (*ahomwi* sing.) are called together to the village *upwipiwo* (*pang'wapi*). The *ahomwi* attends his ward throughout the ceremony; he may be an older brother, an uncle, or someone else who volunteers for the service. 98|

The *unali* are lined up and headed by a "leader," *nachilungulu*, who is usually the most important boy, perhaps a relative of the chief; then they pass one by one in front of the chief who anoints each on the forehead with *whipwi* from a small basket. As each boy passes, his mother runs up and throws into the basket a string of beads or nowadays small silver coins. When all have passed, the chief sends some near relative with the basket still containing some flour and the beads or money to the *n'wimbilo* who is waiting at *Lupwanda*.

This is his signal to prepare to receive the *unali*; he dances, and accompanied by drummers goes to meet the file of *unali*. The *unali* accompanied by their *ahomwi*, their mothers and sisters, sing as they approach: 98| 531 533

"*Tusuje* *kwaya* (*uwapi*) *ahabali* *kwaja*"
"Let us go back, perhaps there is no ceremony!"

The *n'wimbilo* as he meets them sings:

"*Anachilili* *pakwiza* *nawo* *wawanki'wo* *kubika* "*Hawala* *kwiza* *nalapi*"
"Why to come with them these children to leave (a small drum) to come with it?"

and follows this in answer to the song of the *unali* with:

"*Ku ukali* *ukwaja*, (Repeat) *Kwa kwa!* (Chorus) *Mkwaja* *nawi*"
"To the village don't go back. Don't go back all!"

The *unali* now on the outskirts of *Lupwanda* are formed into a ring, behind them their *ahomwi* and behind these their mothers and sisters. Then the *n'wimbilo* leads the way to *Lupwanda* singing:

"*Likwaba* *lya* *ukwaka*"
"Spear of an elephant!"

Next, he calls all the mothers to form in two lines resting at right angles on *Lupwanda* and sings to them:

"*Kapwaya* *ndu* *pasi* *kwin'wa* *kwaupili* *ukwaya*"
"The eagle lighted on the ground so in the air there is not near relationship!"

The *n'wimbilo* and his chief assistant each provided with a "tail" strike lightly on the basket which each woman has on her head; then each with a hand on the basket, they lift it down to the ground. Starting with the mother of the "leader," they go round to each mother in turn. The *n'wimbilo* then to the sound of drums and shopping by the women dances and runs round peeping into each basket exclaiming, "I see so and so in this basket!" saying name, person, medicine, women's pudenda and so on, after which the women take the baskets of food away to the boys' shelters. The *n'wimbilo* next sings: 87|

[533] "Tiapumbi nsumungu ku Lapumbi, pinya ujo'ju kwakuda nsumungu"*
[534] "I will go and bring my child to Lapumbi, when I am going home I had carried"

and running round he seizes hold of one of the well and makes him sit down at Lapumbi, continuing this until he has placed them all in a circle round Lapumbi. He then sings a song about the little basket which the chief sent him containing the remains of the whipped flour:

"Kwada nsyuu akwalinga, ungula ndyamunda, ewu!"
"Little basket the owner who for it look, give me beans, mother!"

His wife who has been waiting in his hut nearby brings him the basket. Holding it in his hands, he prays to the spirits of his ancestors and all the previous medicine-men to whom his medicine-tails have belonged, invoking their aid that the new venture may go well.

Still holding the basket he begins to dance, singing:

"Ayakula ndyamu jiwi"
"Let them (us) manner flour their (Let us begin them)!"

and dipping his right elbow into the basket he smears each mouth on the forehead with the whipped flour. He then goes into his hut and fetches a bundle of powdered roots (which no woman may touch), medicine called nsikula, that is, a medicine used for its aphrodisiac properties. Holding the medicine between the palms of his uplifted hands, he starts singing:

"Kakwinunga kwikipunda, kwinunga ndawu!"
"I manner find not how to unite this, we find (with) my brother-in-law!"

He is immediately surrounded by his assistants and the drummers, who dance round him, all holding their hands about his arm, after which he unfastens the bundle of medicine and puts a little on the tongue of each mouth, beginning with the leader. He then takes some sweet-beer made by the chief's wife and pouring it into his old medicine-gourd, he mixes in some nsikula and gives some to each mouth to drink after which he sings:

"Ansuku! ewuda nsungu na lungu, ukwikiya nsuku
"You have drunk a mixture of water and maize flour, of eating eggs
nsikula pungunu, Ansuku, nsuku ndyamba nsikula;
you stop now, you have drunk (but) I have poured water (in it);
wuti(ji) kukwuka!"
you thought to be about!"

[535] Next he goes into his hut with the small basket containing the whipped and paints his assistant with the flour, a nsikula round the forehead, a line down the middle of the face, a band across the chest, a line down each arm with rings round the arms and forearms, and a line down the middle of the back. They go out again into the ring and while the n'nsikula sings:

* This may be a reference to smoke, the nsikula way.

3:Dramma D-5 (on. 1912) 1922 PT7 Tao PT7

"Kanyanga kwabile chinanga nanuili ku-nakwale kwanakila kwanila"
"The Beard ants bite boys to grown as to going to die"

his assistant with the basket held in his mouth acts the part of the nanyanga, a medium-sized Beard with brilliant blue body and orange head which bobs its head up and down. The assistant lies on his belly and bobs his head and shoulders up and down, lifting himself on his hands. (Children often clap their hands as they watch the nanyanga bobbing up and down "like a bit-eater" and call out to it to eat bite for them.) The assistant then crawls up to the hearth and puts the basket on his head. Resting his face to the ground for a moment, he again takes the basket and places it on the head of the sort-mouth and so on all around.

After this the wali go and sit near the hearths which is not yet lighted, while the n'wisiki sings to the women:

"Kyanilili ankakat kujinala"
"The bound Let him cook a cricket."

and the women give him a basket of beans with which he makes sifting movements, singing: "Shall I throw them away, shall I put them in the cooking pot?" while the women sing.

His assistants are then told to go and light the hearths. He himself goes to his hut and places his "talis" in the adapted basket, and carrying it to the hearths, he throws some of the flour on the fire, "to regulate its heat." This is the sign to begin the dancing which goes on all night while the wali lie round the fire, each lying with his head on the waist of the next, the healer in front.

In the early morning of the second day, the n'wisiki holding his "talis" in his hands cross-saturdiks over all the reclining wali and facing the same way, cross back, after which the boys are called.

He sings a song:

"Mlamlaw Ali 'ga kwachanganil"
"The red ants them bite!"

and he pretends to pick them off the boys. After this, he sings:

"Kulakwal kanga ankakulipanil kukakulipanil?"
"Pots affects little mother?"

as he goes to each wali and throws his "tali" into the boy's hands, receives it back and then puts it on his head till the mother places a coin on his head which is the payment made to the assistant. *Ku-kapaw* = to scour; *ngulipaw* = not at home; *ankakulipaw* = is it not at home, is it not present? The meaning of the phrase in the song is, "Is your mother not here to pay the fee?" *M'kakulipaw* is a pun on *ankakulipaw*, "little mother." This is followed by another song:

"Kyanilili'pan, ngwa ewaga ankin"
"The little house, you jump from two to two!"

as he climbs a tree with his back to the trunk; at the top he hangs by his legs and looks down on the crowd, his assistants doing the same. Coming down he runs to his hut; throwing his "tail" into the air and catching it again, he enters.

This is about nine a.m.; all rest till about eleven o'clock, the well remarkable eating food cooked by their mothers in the shelters. About eleven o'clock, the n'nimbin takes a big gourd and putting his "tails" into it covered with a yellow cloth, gives it to his assistant who carries it on his head and follows him to a pool of water, accompanied by all the women except any young men who have not borne children. He invites them to go "crab hunting."

At the pool he enters the water with his assistants round him, except the assistant with the gourd, who stands on the bank. The n'nimbin makes movements as of hunting for crabs in the water singing:

"Chimungula ngulili ngulili wungu wuuuuu!"
"There must be hunting otherwise I should have had to eat porridge my without relish!"

He pretends to catch a crab and his hands are immediately grasped by his assistants in the water who all help him to convey it to the gourd on the "tail" is taken out of it.

The crowd then returns to *Lepunda* to enact the *nambunda* ceremony. *Nambunda* is a representation of an animal made of bark on a frame-work covered with mud and painted with four in spiral markings, hence the name (*nbunda* is a part of a spiral shell from the Zambezi coast much prized by natives as an ornament). The animal is really the white antelope with horns and the n'nimbin's "tails" in place; there is a man inside it. It is made perhaps a mile away and then brought near to *Lepunda* and placed in a cleared area.

The n'nimbin on his return from crab-hunting has gone into his hut and put on his full regalia; then, accompanied by his drummers, he comes out and is immediately followed by the mali and the rest of the crowd; knowing where the *nambunda* will be put, he leads the people in the opposite direction calling out to them to look out for the antelope. They, of course, all look in the wrong direction, so when he knows *nambunda* is in place, he wheels around and stops. "There is the animal!"

In the old days the chief was present for this, a platform being built for him. When the *nambunda* appeared, he gave his hunters much powder (no bullets) and they shot at the animal. The animal would fall as if hit and the n'nimbin would approach to claim it as his beast, but it would promptly get up and charge, to be driven off by the crowd, whereupon it would run away into the bush.

Lots are then cast by the n'nimbin, using a tortoise shell stuffed with medicine. The mali all stand in a circle with their numbers behind them, while the n'nimbin goes to the leader and throws the tortoise at the boy's chest. If it sticks there, all is well and he proceeds to each boy. Should the shell not stick on the boy's chest, it portends ill-luck to that individual and he has to be dealt with further. The n'nimbin, holding his "tail," and his assistant holding a horn of medicine, stand back to back, with the boy between

3:Stanner D-5 (ca. 1912) 1932 FT7 Yao FT7

them. They then rub the boy up and down with their hands, after which the assistant throws the horn at the boy's chest. If it sticks, the bad-luck is overcome and the women will talk joyfully with their tongues; if it drops to the ground, evil is foretold and forebodings as to the boy's fate at *Nkapula* are whispered round. He is given further medicine against the predicted evil, but fate will not again be cast about him. 531

Next the n'wisiklu sings: 531 533 537

"*Kanakakwe nanuulu, wanjiku ngwanu, jiku ngwanje*
"The one who scrapes hairs, (your) father is still living, come that I may shave thee,
nanakakwe nanuulu, wanjiku ngwanu!"
the one who scrapes hairs, (your) father is still living! (Chorus) "*Jwali, jwali!*"

Jwali is a word meaning "sticking up in all directions" and refers to the hair.

One assistant holds a pot of water, a second, a leaf of the *ngwanku* tree, and the n'wisiklu a razor. They approach the leader; water is rubbed on the forehead by the first assistant, the second smears the place with the leaf. The n'wisiklu then removes a little tuft of hair from the boy's forehead and puts it in the boy's left palm, followed by the nail paringe from the left hand, and a tuft of hair from the back of the head. This is done to each month in turn after which he sings:

"*Tuwanje* *Ipulanwakula!*"
"Let us shave them" (*Ipulanwakula*, to trim by shaving)

as he walks round them, after which the boys go to their mothers who are allowed to trim the hair on the forehead in any way they like. This may take ten minutes, after which they return, still holding their hair and nails in their hands. As they return, the n'wisiklu, throwing his "tail" under the left arm, starts off, all the mili falling in behind him, and thus he leads the way into the bush accompanied only by the mili, singing:

"*Kapili ku wanlu! wanulu!*"
"The *Kapili* under the mulu tree *wanulu!*"

He marches through the forest until he finds *chilulu*, a small dome-shaped ant hill about a foot high. He carries his "tail" under his arm and a reed-buck's horn of medicine in his hand. Arrived at the *chilulu*, he chips the top off the ant hill with the horn and his "tail," scrapes a hole in the exposed surface with the horn, and then smears this hollow with medicine from the horn. The leader then approaches and drops his hair and nail paringe little by little into the hole, followed by each mwali in turn; each immediately turns about and never looks back on the ant hill. When all have done so, the n'wisiklu sets the top of the ant hill back into its place, having the "tail" and medicine horn in his mills; he then turns about and becomes the last of the file as they march back to *Lupanda* while he sings the same song as before.

This particular ceremony is the most sacred of the Dipoge as it is known only to the mili. It is the sign of burying the past of childhood. If another n'wisiklu could find such

a piece, he would take part of it and its contents and add to his own medicine "to make him a more powerful n'mishilu."

On the way back, the n'mishilu takes a piece of bamboo in his right hand and when he comes to a *mjombo* sapling, the boys all surround him in a ring; with the "tail" in his left hand he strikes the *mjombo* sapling, and as it rebounds, he strikes it with the bamboo; while the sapling swings backwards and forwards, he sings:

> "*Ngwee ngwenee nikwi ni mjombo/*
> "Rolling I have struck together the bamboo and the mjombo tree!
> *hilimbilo/ ewenili hilimbilo/*"
> shoyon for yourself"

The n'mishilu takes both his "tails." Holding them in his left hand against the *mjombo* sapling, the bushy part of the tails uppermost, and in the other hand a stick smeared with beeswax, he rubs the sapling at a point just below the "tails," still singing the song given above. The stick is said to represent an axe. After this, he takes a real axe and cuts off the top of the sapling. Then all the boys seize the sapling and work the bark off without cutting it anywhere, while the n'mishilu continues to sing. The bark he puts in his armpit and sings as he jumps about:

> "*Tinjipwile pupwaje, (lishwaje) chipulula pululu/*"
> "I shall fall into the pit, jumping about here and there!"

When they arrive at *Lupwande*, the n'mishilu unwraps goes to his own hut to make string from the bark, the boys to the place where *Lupwande* is made. This is at about three in the afternoon.

When the string is ready, the n'mishilu takes it to cross-roads, plaits it into necklaces, and anoints them with medicine for the souls. On his return to his own house, the mothers have cooked porridge for the boys, and the baskets of food are put ready at *Lupwande*. The n'mishilu then steps in and sings:

> "*Tulo (ayi) wingi wawa wawa, wawa wakwapwelingwi/*"
> "(A) little woman (has) many children, mother, all are to be fed!"

As he does so, he takes some food in his hand and puts it into the mouth of the leader, and so on all round, while all the people keep at a distance. Then with a hoe he makes a small mound where *shing'wada-ng'wada* will be erected and puts on it a little of the whole meal from his house. Here he seats the leader and round him sit all the other souls. The n'mishilu then sings:

> "*Tinwende shawa shawa lilo kwakuja'lo shawanyala nyawanyi/*"
> "I will take off heads my today where they go to it seems they will never come back!"

[1] *Kwada*, to what a hole.

3:Stannus D-5 (ca. 1912) 1922 FT7 Yao FT7

He collects from the boys' necks the beads they are wearing, lifting them off with his medicine horn; these are all his perquisites, to be sent off to his house. He then starts singing: 881 533 539

"*Nchilinguda Lepunda nguma ngulungwa pakala jukumunga, mukila!*"
"The leader (of) *Lepunda* (is) an animal big worth killing with a spear, tail!"

This means to the leader's relatives that the boy is worth a spear; one is promptly brought and leaned against the leader; the *m'mishila* steps up and taking it, bends the spearhead and sends it towards his house. He then sings:

"*Njajaka* *nati* *kalungu kunjaka* *nati*
"Things which are put to lean up against even little sugar cane to lean things up against even,
kapunda *kunjaka!*"
little arrow!"

The relatives then bring all kinds of presents and lean them against the boys; these are the perquisites of the dancing men. The *wali* go away to eat now with their *akumwai* behind the shelters. The *akumwai* tie up any food that is left in leaves, for later use. They then return to the roughly-made *ching'undung'unda* where the *m'mishila* meets them. The *wali* stand in a circle round him and outside them in a ring, the parents, while the leader is set on the *ching'undung'unda* mound.

The *m'mishila* sings:

"*Lamujisi ulungu pa mito'pa kapusi* *utundi, ulungu, ambiungja!*"
"You of the buffalo hair (lit. feathers) on the head you put four *ulungu* call me."

as he then goes around and touches each *wauli* with his "tail." The idea here is that the *wali* with flour on their foreheads resemble buffaloes which have white patches on their horns, and they will therefore be as strong as these beasts in the bush whither they are about to go.

The *m'mishila* then runs away to his hut and breaking a hole through the back, makes for the bush. The assistants know this disappearance is the signal of his departure for *Ndapula*. This happens about four o'clock. All exclaim "*Aoouh!*"; (to exclaim thus is *kuoouka*, "to exclaim with apprehension.") The assistants head off in the same direction, followed by the *akumwai* and their *wali*, while the mothers of the boys who may never see them again, throw sticks on the path as they run away as the sign of forgetting their sons for the time being. 881

All the men will also accompany the *wali* until they find the *m'mishila*. He having left the chief's basket at *Lepunda* has brought some of the *ulupani* with him in his own basket. One of the men brings a gourd full of water; the *m'mishila* pours some of the water into his basket of flour and gives a drink of this first to the leader and then to each *wauli*

881 in turn. After drinking, they sit down while the n'nichila gives instructions that have they sleep tonight. He takes his basket and starts to run back to *Lupanda*, singing:

[533] 539

"*Ku*	*tuqila*	*pahdiqa*	*ochumbuja*	*hutuqiva*	*ku Mundi!*"
"Where	we want to		masters		to *Mundi!*"

Then going to the back of his hut, he enters and takes a piece of bark left there bent up into a dish containing medicine which has been put in by an assistant. This assistant holds in his hand the neck of one of the fowls which was killed at *Lupanda*. The n'nichila washes his face and chest with medicine to cleanse his eyes and then leans forward to the assistant and bites a piece off the neck of the fowl which the assistant holds out, and eats it. This is *ku-lumiva*, "to taste a small piece," often the liver, before starting to eat the flesh; this is generally done by the most important person. The n'nichila has been followed by his assistants who do as he has done. They all follow him next round the cooking place for the boys at *Lupanda*, each standing for a moment on the stones which have supported the cooking pots, while the women sit looking on sadly. He begins to dance and the women join in, singing *likwata*. He then calls the parents of the wali and leads them to where the bonfire was. There assembled, he tells them they must not bathe, and that tomorrow morning early, porridge is to be sent to the wali which must be prepared by a woman who has had connection with her husband and who has not washed her hands; this is supposed to make the boys strong. Early in the morning, the husband, who likewise has not washed his hands, carries the food to the wali and personally gives portions to each boy to eat.

881 304 When they have partaken of the food, the circumcision is performed by the n'nichila who has returned the same morning early. The wali one by one, commencing with the leader, go forward a little to the place where the n'nichila awaits them. Each wali is accompanied by his nhamusi who commonly says, "Come along and you shall eat of the honey made by the bumblebee." Such honey is very sweet and called *nasma*. This refers in sarcastic terms to the pain the boy is about to undergo. The boy squats down, leaning back on his nhamusi who supports him, while the medicine-man, having warned the lad not to cry out, performs the circumcision with a small knife called *chisanda*. It is a triangular knife with one cutting edge and a handle produced from the opposite corner. Properly the Yao method is, I believe, only to nick the free margin of the prepuce just to the right of the middle line near the frenum, but complete circumcision is now commonly practised, possibly as the result of Swahili influence. In this case, the prepuce is seized and held by the fingers, and division made by a circular incision without using a clamp or forked stick. A dressing of charcoal and oil may be applied or medicine is chewed in the mouth and the saliva spat on the wound and the boy sent on to rest under some convenient tree.

[412] [752]

When all the wali have been circumcised, they are gathered together in one place and the n'nichila dividing them into groups, puts on the neck of the leader of each group a necklace made of plaited bark from the *mjombo* tree;[1] these necklaces contain medicine against all evils – witchcraft, attack by lions, etc.

88 [751]

against all evils — witchcraft, attack by lions, etc. The *akamwi* then set about building 881
shelters in which the *wali* will remain during their term of instruction. According to the
number of the *wali* so the number of places where shelters are built may vary from one, two
or three, to as many as eight. Each of these places is called *Ndapala*. They may be many [346]
miles apart and are so placed for the convenience of the mothers in various groups of villages
who bring the food daily to the group of boys from those villages.

The boys when they originally left the village were wearing a large bark-cloth covering,
with beads and collars, which latter articles have been taken by the *m'waikila* and his as-
sistants. At *Ndapala* they wear simply a loin-cloth of bark.

During their stay at *Ndapala*, the *wali* are given animal names by the *akamwi* who [553]
carry on the instruction of the boys until their return to *Lupanda*, the *m'waikila* having
gone back to his village immediately after the circumcision. The names given to the boys [551]
are commonly names of beasts of prey such as Alikula (*likula* = the jackal), Achimwi
(*chimwi* = the leopard), etc.

Certain restrictions as to diet are laid upon the *wali* by the *m'waikila*, e.g. no meat of 881
an animal killed by a beast of prey, no mudfish, *likumbula*. He will not allow any villager 262
to visit *Ndapala* after seven P.M. and visitors may only be men who have been through the
ceremony. An uncircumcised man is called *ndalala*, one who has not been to his *Unyago*.

Other restrictions as to foodstuffs may be made by the *akamwi*, generally in connection
with the mythical origin of such food substances. A finger-shaped yam called *lipata* is
taboo, as it is said to have first sprung from the grave of a leper, the inference being obvious.
After the *Unyago*, the boys have to undergo a special doctoring before they may partake of
them. Bananas and rice are similarly refused them, the latter on account of a story to the
effect that rice grew from the nostrils of a dead man, the idea doubtless having relation to
the resemblance of rice grains to maggots. Fish is denied them by some masters of cere- [825]
monies, as it is said to have originated from the diaper of a woman which she threw away
while bathing.

Each *m'waikila* may have special observances of his own. One near Zomba caused all
cassava to be roasted in a certain way. Rows of pieces of cassava were placed in split [252]
bamboo splits and so roasted before the fire in the manner of fish. If roasted in the ordinary
way, the cassava would split and show the white floury material inside, signified by the
verb *ku-lapala*. If this is eaten by the *wali*, it is said that the preputial wound would reopen.

The length of time spent at *Ndapala* varies from four weeks to as long as three or four 881
months. In the first place they must wait till the circumcision wounds of all are com-
pletely healed. Delay may be occasioned by complications having arisen in some cases.
Again, permission to return may be withheld by the chief for some reason or other.
Should one of the *wali* die at *Ndapala*, the body is buried out in the bush and nothing [766]
is said to the parents until after the ceremonies are over and all have returned to the
village.

881 During the period of seclusion at *Ndapulo*, rigorous discipline is maintained among the boys, the day commencing with bathing in a stream whither the *wali* are driven before sunrise, a favorite form of punishment being to make the boy sit for hours in the cold water. Other disciplinary measures take the form of frequent beatings. At one *Unpapo* I know of, there was a kind of mutiny among the boys. The *akamusi* from a nearby *Unpapo* were called in and the boys received very severe "hidings" for their trouble.

For the entire time, the *wali* are occupied in receiving instruction given by their *akamusi*, on the discipline of manhood; they are taught native custom as applied to their relations with their fellows, an exacting code of etiquette to be observed to their elders, and the observances of married life. They learn to become proficient in the arts associated with their sex — the making of baskets, mats, traps, etc., the method of agriculture, drumming and dancing. They stay up late into the night listening to the stories of their tribal history.

Until such time as the circumcision wound is healed, each boy must cook his own food, after which food is brought ready cooked by his mother.

Posted in the bush a little way from the encampment are some of the boy's guardians, *akamusi* or *alombue* (sing. *alombe*) who act as pickets to warn off innocent or intentional intruders. They are armed with sticks, etc., and give pretty severe treatment to any inquisitive persons they catch. A visitor to *Ndapulo* may be required by them to give visible evidence of not being *ubulale*. The mothers who come with food call from a distance, "*Alomue ndute!*" Answer is made, "*Atutulile tulpe!*" "Put down for us that we may eat."

881 When the chief decides that the time has come for the return from *Ndapulo*, he sends
273 for the *w'mikila*. Arrived in the village with medicine which he has collected, he is given millet by the mother of the leader from which the malt for beer making is to be prepared, also a cock and a hen and a pot. Into the pot he puts a tail feather from the cock and one from the hen, together with his medicine; then the millet, and water is poured on, after which he goes to *Ndapulo* and shaves the heads of all the *wali* beginning with the leader and then returns to his own village. When the millet has sprouted, the woman takes it out to dry on a mat, and the two feathers and the packet of medicine are laid on the mat by its side. From this time, all the mothers are busy preparing malted grain for brewing beer, and, when it is ready, the *w'mikila* is again called to the village. He orders the women to prepare for brewing, to bring firewood, their brewing pots, and stones to support them on the fire. These are all set round in a circle in the presence of the chief and headmen. Across the stones the *w'mikila* lays his "tails" and on the firewood he sprinkles some medicine; the "tails" are then removed and the pots set on the fire. Commencing with the pots belonging to the mother of the leader, he acts similarly all round. The following day, he again visits the scene of the brewing. Putting his "tails" on the ground, he dips from each pot in turn and pretending to drink the sweetbeer from the dipper, he empties it into other pots carried by his assistants. From his own pots, he then empties

3: Stanmus D-5 (ca. 1912) 1922 FT7 Yao FT7

some sweetbeer into a big gourd. These his assistants will carry away, together with a hoe, to *Lupanda*, whither the *m'michila* now goes to remain while brewing goes on for four days. 881

During their stay at *Lupanda*, the *m'michila* and his assistants live on flour and chickens begged from the mothers of the *usili*. On the first day nothing is done; on the second day they begin making the *Isyapo* or figures in relief of animals, etc., to be described later; *Nanmapwei* is made this day. On the third day the other figures are made and on the fourth day *ching'undang'unda*. Into the ground where *ching'undang'unda* is made, some of the strong beer, known as *ngunga*, which is added to the flour and water mixture on the fourth day as signified by *Iwa-kulajula*, is poured by the *m'michila*. 273

When the work at *Lupanda* is finished, the *m'michila* carrying his "tail" leads his assistants wearing their feather headdresses back to the chief's village singing:

"*Ningulule* *ukwa* *kunga* *ukulajula* *ku* *musi*, *mulungu* *achamao*/ [533
"I must go and see beer perhaps they have mind at the village, ancestors oh dear!
Chilumila *chamajusi* *ngulya* *sana* *ningumila* *sala*/" 539]
The going out of a day or two ago if I had not taken tobacco I would have died of hunger!"

Arriving at the village where the brewing is going on, the *m'michila* takes a cup and putting his "tails" on the ground, he dips into the pot of beer belonging to the leader's mother, pours some on his "tail," and then drinks some. Then he puts more into a gourd, together with some medicine, and going up to the chief who sits in his verandah overlooking the brewing place, he kneels, and first drinking a little himself, he presents the drinking gourd of beer to the chief who drinks and then returns the cup to the *m'michila* who finishes it. Picking up his "tail," he then goes straight back to *Lupanda* while his assistants with some men nominated by the chief go round choosing pots of beer in turn. The assistants choose by striking a pot with a medicine-tail. These pots of beer are then put aside to cool, while moderate drinking begins in the chief's house. This takes place in the morning of the day on which the *usili* will return from *Ndagala* to *Lupanda*, and in the afternoon, the people from the villages will go out to *Lupanda* to take part in the return. The return is made about sunset.

The *usili* at *Ndagala* are put into their shelters and the doorways barricaded. At sunset or just after, the place is set on fire and the *usili* have to charge their way through the back of the shelters. They then form in line, wearing a slip of bark cloth round their loins and over this, a kind of kilt called *magajuwisa* if made of frilled-out bark-cloth, or *majenga* if made of palm leaves. Accompanied by the *ahamusi*, they proceed towards *Lupanda*, each carrying a stick of smouldering wood and an unlit torch of bark-cloth. 881 [297]

The burning of the huts at *Ndagala* has been the sign to the *m'michila* that the *usili* have left; he puts round his waist a bark cloth belt, *chamba*, and a calico sash round his chest with the ends hanging down behind and on his head he wears the *lisenga* headdress made of the feathers of *chimpu*, the widow-bird. In each hand he carries the tail of gnu or zebra, hold right end up, with the hollow end filled with "medicine." Thus arrayed, he goes out 881 533 539

861
533
539

along the path towards *N*dapala, to meet the *wali*, accompanied by the drummers and all the women, singing:

"*M*ahamba *kwiwapala* *wale!*"
"The lions down the stream!"

When he meets the *wali*, they all throw their lighted torches at him and he flees back to *Lapanda*. The *wali* continue their procession and are brought round to the still unlit bonfire known as *chilungali*.

At the order of the *w'michila*, the fire is now lighted and the *wali* lie around it. The *w'michila* again appears with the drummers, and all the women and other villagers form a big circle round about. He sings:

"*Chombolo* *chilwanja* *nkoja,* *wandu'wa* *chikwajopopa!*"
"The (lord) fire is now flaring up people these it is afraid of them!"

Dancing and singing then go on all night while the *wali* lie round the fire where they are allowed to sleep. As dawn approaches, the *w'michila* again sings:

"*Chonde!* *Mwaliva,* *awali,* *Amasa* *mwanache,* *mbale*
"Please! it is crying, you girl, arrange the child, the girdle of beads round its waist
mwanache *ukapapa!*"
lest there be exposure of the person!"

Amasa: a woman carries her child bound to her back by a piece of cloth passing under her own arms and tied in front. If the cloth gets loose, she jogs the child up higher on her back as she rearranges the cloth; this is what is meant by *amasa*.

The *akawusi* waken the *wali* as the *w'michila* sings:

"*Kwambaliva* *waka!*"
"To now after the scent!"

That is, he is looking about for the *ingapo*. He then leads them off to *nalumgumi*, the whale, the first of the *ingapo*.

I shall first go on with an account of Mlemala's practice to the end of the ceremony and then discuss the *ingapo* in greater detail.

Arrived at *nalumgumi*, the *w'michila* sings;

"*Nalumgumi* *nalilenda,* *nalumgumi* *anwali* *kuchika!*"
"The whale in the pool, the whale has blocked the ford!"

after which he straddlep the head of the whale while one of his assistants does the same at the tail and thus sitting, they do a kind of wriggling dance, singing to the time marked by clapping of hands:

"*Nalumgumi* *atandawala, ah! ah!* (Repeat) *Apalapala* *wate kundama; apalapala*
"The whale showed his back above the water, ah! There it did fail me; there
wate kwamba; *Kwa, kwa, kwa, kwa!*"
it did half break;"

The m'michila then gets off on the left side, his assistant on the right and they stand in the shallow depressions. The m'michila starts asking riddles; he says, "*Ndawi* (riddle)!" and is answered by his assistant "*Jiicha* (let it come)!" Here is one: 881 533 539

"*Kangwe, hapila pasi!*"
"The little mouse it has defecated, it has gone into the ground!"
Answer: "*Michipa!* (roots)!"

He then goes round the crowd for the answer—if they cannot guess, they say, "*Ali ayuna,*" "it is yourself (to answer)." There are hundreds of such riddles.

The m'michila points to the tusks depicted in the *chinyago* and tells the people, "Long ago this used to be an elephant; look at the tusks." The hump at its back he tells them is the same as *ching'wandung'unda* which they will find farther along.

They pass next to *mbunda*, the zebra; a pair, male and female, is always figured.

"*Ajiji ngati mbunda ja mbuje Achilemala! Yoyepe yakota!*"
"This one is it not the zebra of Mister Mlemala! everything (is) beautiful!"

Sometimes a story is told to show that the zebra used to go to the sea to drink but seeing the whale, he ran away and came to the country of the python.

Then to *nato*, the python; he sings:

"*Anaanto kunjonji! pawe, ejo! Yoyepe yakota!*"
"You python come and answer! all (is) beautiful!"

At the crocodile, *nguena*, he sings:

"*Chenguena ulamba, pawe! ejo! ahugona mumpulupulu mwai!*"
"Mr Crocodile cleverness, he sleeps at the side of the water!"

At *mwezi*, the moon:

"*Amwezi ulamba, pawe! eja, amwe!*"
"You moon cleverness, !"

Next, they come to *wakolele ukwa*, the people drunk with beer. Two men lie on the ground, feet to feet with nothing on; the pudenda are covered with bark-cloth and the whole of their bodies painted with earth and flour to look like two female figures in earth. The song is:

"*Wakolele ukwa: kumlola amwali, wakolele ukwa!*"
"Drunk with beer: come and see the woman, drunk with beer!"

A moral is pointed: the disgrace to a woman who gets drunk, lies on the ground, and exposes her person. As the m'michila makes these remarks, the figures breathe stertorously as a drunken woman would. He conducts the *wali* and all the other people past many of the other images such as *chiwi*, *nguba*, *mbunda*, *mbala*, etc., and only stays at those he considers his own special *ingago*. The seven specially dealt with by Mlemala were as above together with *mbalapi*, the sable antelope: [834 689]

881 533 539

"Anambalapi ukamba, peepo pahata!"
"You able deceit, everything (is) lovely!"

Next comes *chombolo*, the ferry. There is no image but two posts represent the ferry; the *m'michila* stands on one side of the two posts with his two assistants opposite him, one holding a bunch of leaves, the other a burning log: the first fans the log of the second, using leaves as bellows, while the *m'michila* sings:

"Ngumba, ngumba, kujilututa, ngumba!"
"The female pudenda, where it pushes itself!"

after which the *wali* one by one are pushed through between the two assistants. *Chombolo* signifies the passage from one part of the ceremony to another; here, from the *ingage* to *ching'undang'unda*. *Ku-jombolo* = to cross a stream.

As they reach *ching'undang'unda* the *m'michila* sings:

"Ching'undang'unda nahilembile jinguwe ngwo jakupochela wailamba!"
"Ching'undang'unda I have marked out *if* it were calico distinctive of chiefs!"

One of his assistants is told to go and get a pot of beer. When it is brought he sings:

"Amuali, kamamba, nawila kunyuma!"
"You girl, little fly, wash your hands behind you!"

881 533 539 608

This is the sign for the woman who volunteers for the service to the leader, to come forward, followed in turn, as each *muali* is dealt with, by other women. The woman stands back to back with her *muali* and they hold hands, while the *m'michila* comes and pours a little beer on their hands; they make movements as of washing the hands and then separate, the woman rejoining the crowd, the boy standing to one side until all have performed the rite. This woman ever afterwards is treated by the *muali* as his adopted sister. After this, each *nkamuzi* takes his *muali* into the bush near by and holding the boy's cloth over the lad's head, he waits there for the boy's relatives to come and redeem him with fees. It is a point of honor that as many relatives as possible shall turn out to show that the boy is much liked, this being, of course, so much the better for the *nkamuzi* who gets a present from each. The *nkamuzi* then uncover the boys' faces and hand over the lads to their mothers who take them away to rest in the shelters.

The *m'michila*, meantime, has withdrawn to his hut, where all the relatives later collect; he then comes out holding his "tail," singing:

"Kwenda nkujoje nkwanangwe kapa!"
"Come and bathe those who love to bathe!"

Each adopted sister or woman guardian takes her *muali* brother on her back and carries him off to the stream to bathe. The woman sets her *muali* down on the bank and then leans across his back while the *m'michila* comes along and dipping his "tail" into the

3: Stannus D-5 (ca. 1912) 1922 FT7 Yao FT7

stream, sprinkles the boy on the chest with the water. Then the positions are reversed and the woman receives the "tail" on her chest, after which they plunge into the water and bathe, each pouring water over the other. The woman rubs the boy's back and he in turn shyly rubs the back of his woman guardian. Clothes are not removed. Everyone looks on.

While this is going on, the *m'michila* and his assistants build a kind of fence across the return road; as the people start back, he sings:

"*Mato wangu*	*akuwuma*	*nanagwe*	*wakumbe mauka!*"
"Fire my	they are buying	I myself	they give me the spirits!"

that is "everyone has got to buy from me the gifts I myself have from the spirits." As each woman comes up carrying her *mauli*, the mother runs out and makes a payment to the *m'michila* so that her son may be allowed to pass. The boys are carried back to the shelters where they rest. The mother of the leader cooks food into which the *m'michila* puts medicine; he then gives some to each *mauli* to eat, after which they partake of the food prepared by their mothers, while the *m'michila* goes to the village for the beer drinking, returning in the afternoon. In the interval the dancing men dance *chambe*, etc.

Oil standing in separate basins on the ground has previously been prepared for anointing the *uali*. The *m'michila* takes each basin and passes it across the palm of his hand on which he has smeared medicine, each basin being set down on the ground again. Taking a stick, he smears it with medicine from his "tail," and he dips it into each basin. He then comes with his "tail" to detect any woman who may have had any sexual intercourse instead of remaining continent during the stay at *Ndapala*. He dips his "tail" into each basin of oil in turn and holds it up for the oil to run off. If the oil runs off in a stream, the mother as she stands behind her basin of oil is welcomed as a good mother; if the oil runs off drop by drop, "*ndoli*," the woman is laughed to scorn. Her basin is changed for that of another woman or her oil is thrown away and some from another basin is put in its place so that no harm shall result to the boy.

The *ahawusi* then take the boys into the bush near by. The *mapajawias* dress is removed, the body anointed with the oil, and fresh bark-cloth dyed black is put on. Little bows and arrows are made of small branches and grass and with these the *uali* shoot as they again enter *Lupanda*, putting the bows down on *ching'undang'unda* to the trilling of all the women present.

Immediately after this, the return is made to the village, just after sunset, the women having been busy gathering up all their belongings, while the boys were being anointed.

Some of the assistants lead the procession, the *uali* following in single file, all much subdued and walking very slowly, dressed in the new bark-cloth round the loins, with many ropes of beads round the neck and body, a headband of bark, and down the back a string of beads to which is attached a tassel. Each carries in his hand a wand about five feet long, *sungu*, with a pattern burned in the shaft and two rattles, *masewe*, affixed at the upper end.

881 While the *wali* thus march solemnly along shaking their wands, the assistants begin singing:

"*Ku* *mlango* *wafunga!*"
"To the gate they have shut!"

[533] 534 to which the *wali* reply:

"*Kusuwa* *kwakupita!*"
"There is no place where to pass!"

The *m'mishila* remains at *Lupanda* till everyone else has left; he then sets fire to the shelters and leaving without looking back, runs to overtake the procession and then leads it on towards the village still at a slow pace, while all around is a yelling crowd of delighted mothers and other relatives and the assistants and drummers, all singing and shouting.

When the outskirts of the village are reached, the *m'mishila* halts and waits for the chief to come out and give them permission to enter. The chief brings calico which unrolled on the ground measures the length of the procession of *wali*. Headed now by their leader, the *wali* walk over this calico, while the assistants roll it up behind them for the *m'mishila*, as it is part of his payment. Flour may be brought him at the same time, carried by the chief's wives.

At an *Unyago* I witnessed at Kumimuma's, the halt was called on the bank of a stream at the edge of the village where a bamboo arch had been erected. The arrival of Chief Maimuya at this point with calico and flour was the sign for a demonstration by his young men who ran forward as if in battle, firing off blank rounds from old Tower muskets and executing a kind of war dance.

After the calico has been handed over, the chief returns to his kraal and the procession continues into the village, across the village open space to the fence round the chief's house. There, the *wali* enter by a gateway and disperse over the courtyard where they find [771] their sleeping-mats laid out ready for them by their mothers. The *m'mishila* lays his "tail" on the leader's mat to bring good luck thenceforth. With Mlemala, there is no further part for the *wali*, but in some cases they are called upon by the chief to give an exhibition of their dancing and drumming. The *wali* sleep that night in the kraal and disperse the following day.

In the morning, the *m'mishila* takes his "tail" and a stirring stick made from a millet stalk with the roots on it, and strikes the ground at points in a row in front of the chief's [573] house. Here the pots of beer which have been prepared are placed in rows, those chosen by the chief and those chosen by the *m'mishila*, and drinking commences. The *m'mishila*, before he joins in, takes the *wali* to an ash-heap in the village and there sprinkles them with [574] medicine from a grain-mortar after which they go with their *ahamusi* behind a house and change into new clothes. Th[illegible] go and salute the chief by clapping their hands and depart to their villages, de[illegible]ted and somewhat subdued by what they have been [575] through. Their new names as "men" may be given them by the *ahamusi* either at *Lupanda* or after the return to the village.

3: Stanaus D-5 (ca. 1912) 1922 FT7 Yao FT7

or after the return to the village. The boys often wear all their headwork and new cloth for several days; after carrying their *sipuspe* for a similar period, they give them up to their *alomusi*. Together they go into the bush where they break up their wands and put them either into a pit or in the forked branch of a tree. Before the *m'wiskile* leaves, he brings to the chief all his takings and these are divided between them. 881

Mention has been made above of the *isipuspe* and it now remains to consider these more fully. The figures vary in subject, in number and in arrangement. At the ceremony at Kumizama's, the following were arranged in a long line beginning with the whale and ending with the python before *ching'undang'uspe* (Pl. X, fig. 2). 778 825

1. *Nahungusi* ..... the whale (Pl. XI, fig. 7).
2. *Nyuma* ..... the crocodile (Pl. XII, fig. 1).
3. *Chinsi* ..... the leopard (Pl. XII, fig. 3).
4. *Mbunda* ..... the zebra (Pl. X, fig. 6).
5. *Nyuba* ..... the scaly anteater (Pl. XII, fig. 2).
6. *Ndemunda* ..... the hippopotamus (Pl. XII, fig. 4).
7. *Kuspe (nahuspe?)* ..... (Pl. X, fig. 5).
8. *Mbulupi* ..... the sable antelope (Pl. XI, fig. 3).
9. *Wahungwe wa chibwa-bulule* ..... the woman dead in child-birth (Pl. XIII, fig. 2).
10. *Lpuwe* ..... the sun (Pl. XI, fig. 4).
11. *Lchinto* ..... the scorpion (Pl. XII, fig. 6).
12. *Mbale* ..... the plate (Pl. XI, fig. 6).
13. *Lchumunda* ..... a kind of cloth (Pl. XI, fig. 5).
14. *Njusi* ..... the lightning-lizard (Pl. XIII, fig. 4).
15. *Sebete* ..... the iguana (Pl. XII, fig. 5).
16. *Mundu* ..... the man (Pl. XIII, fig. 1).
17. *Lipubwe* ..... the wild pig (Pl. XI, fig. 1).
18. *Sungulu* ..... the hare (Pl. XI, fig. 2).
19. *Sulu* ..... the python (Pl. XIII, fig. 3).

Beside these, *Nyuma*, the lake, nearly always appears;[1] *M'wesi*, the moon, the drunken woman, and certain animals may be represented, and in addition, *chinsu*, "the dwelling place of all the old spirits." Each particular *m'wiskile* has his favorite figures about which he sings, always commencing, however, with the whale.

Reproduced here is the series of *isipuspe* at Kumizama's village sketched at the time of my visit. It seems probable that originally the same set of figures was always reproduced. It is hard to trace their significance with any certainty. Natives aver that they are made only for instructional purposes. "The animals are made so that the boys may recognize them, while some of the other figures have reference to customs." They deny the more in-

[1] Cf. Stanaus and Duvey, 'The initiation ceremony for boys among the Yao of Nyasaland,' op. cit., Pl. III, fig. 3.

3:Sumnus D-5 (ca. 1912) 1922 FT7 Yao FT7

718
S25

teresting possibility of a totemic origin and it is, of course, true that at the present time the Yao have few clan names referring to animals and practically no clan food taboos.

At Mkangala's village in September 1912, I saw the *ingoje* figures being made. The long grass was cleared away and the earth hoed up into heaps, roughly of the shape and size of the figures to be made. A number of women were employed carrying water from the stream with which the mounds were well moistened and moulded into more definite form. The outlines of the figures were then drawn in, all by one *ciliak* man, with flour measured on by hand. In drawing *nakumpumi*, it was interesting to note how the efforts to keep to symmetry failed.

Of *ngwena*, *chimsi*, *ngulu*, *ndumunda*, *mkulupi*, *nakula*, *Ngulowe*, *nata*, I have little to add; the natives are told of their habits, whether they are good to eat, whether they are dangerous, etc.; and all the stories about them. *M'bunda*, the zebra, is always represented in duplicate for some unknown reason. *Bungulu* is pointed out in reference to a story the boys have been told at *Ndagala*, namely, that the hare is good to eat but they must not eat it till after they are married and their wives have borne children; otherwise they will be children. The superstition regarding the hare is mentioned elsewhere. *Njusi* is the hypothetical lizard-like animal which lives above the clouds and is seen as lightning. *Libombondo* is a cloth which the Yao used to wear. In the presence of his chief, a man must not throw a fold over his shoulder. *M'bula*, the plate, refers to the chief's plate from which he eats. *Lilolotu*: It is said that the old people used to eat scorpions and the people of Mangoche, Amangoche Yao, used to call the Amachinga Yao the "*Malolotu* eaters." *Lgwem* is the sun, the giver of daytime. *Wakungwe* is a representation of a pregnant woman who has died undelivered because her husband was unfaithful. This is a well recognized superstition and one among others of equal moral value, introduced into the youths during their stay at *Ndagala*. Though rough, *nakungwe* is a very realistic figure. The woman is evidently lying down, in one hand supports the head, the other hand grasps the thigh as if she were in pain; the breasts are made large and the figure being in relief, the prominent abdomen, and expanded umbilicus are noticeable features. The face and pudenda are modelled in clay and superimposed on the earth figure; a maize cob stalk is placed in the nose to counterpart the nose-button worn by women.

In contradiction to *nakungwe*, *mundu* is symbolic of the man who has led a proper life and is blessed with a child. The child is shown on one side. On his other side is seen a conventional illustration of a spear, possibly to indicate that the figure is that of a man. I am not very sure about *Kungu*; it may be meant for *nakungwe*, the woman who officiates at *Lilimo*; there is nothing about the figure to suggest a woman and I could learn nothing concerning it.

Nakumpumi: There appears to be some difference of opinion about this animal. Formerly I accepted the translation given by Scott,[1] namely, the whale. Others have supposed

[1] David Clement Scott, 'A syllabarie dictionary of the Mang'anja language,' Edinburgh, 1892, p. 492.

In Stacks D-5 (no. 1912) 1932 FT7 Tao FT7

that the word refers to some large animal which lived or may still live in the big lakes. The older natives say of nalompawi that "it lived in the big sea at Zanzibar. It would come and lie on the surface of the water, maybe near a village; then the people would go down and cut lumps of meat off without its knowledge; the wounds healed up immediately. Meat from different parts differed; some was nasty to taste. It was a very large animal indeed and never lived in the lakes." They distinguish it from *Ngwe* of the *Anyanja* which was "bigger than a hippopotamus but not as big as nalompawi, lived in the lakes of Nyasaland, in the deep parts as at Tundu on Lake Chilwa; was very fierce and killed the hippopotamus; would upset canoes. There are no more *Ngwe* but probably there might be." One of my informants, a man of forty, said his father had been told of them by his father, but he had never seen them. At the present time, other natives say that the nalompawi used to live in the lakes but they seem really to refer to *Ngwe* and I think lessness of speech only accounts for the idea that the word refers to anything but the whale. Hetherwick translates nalompawi as a large fish figuring in the initiation ceremonies,[1] a poor description, since it always has four limbs. The word nalompawi meaning a whale, occurs among the Makwandwe people who live at Quilimane. These people do not make any figures on the ground at their circumcision ceremonies but it is interesting to note that their wall carry staffs similar to the sponge on their return to the village. I think, therefore, there can be little doubt that the word refers to the whale which was probably well known to the Tao before they migrated so far inland as Nyasaland. Whether the word was adopted or not in these parts in the past and used for some indigenous animal now extinct, one cannot be quite sure, but I think it is improbable; I believe the confusion with *Ngwe* is of quite recent date. *Ngwe* itself appears to have been some large mammal of the hippopotamus type, extinct probably for some time. The stories of *Ngwe* resemble those of the monster of Lake Ngami and are not without interest. The most weighty evidence against the animal now depicted as the *Ungape* and called nalompawi being a whale, is found in the representations themselves. It has a neck with a knob at the junction of the head with the body and a second knob at the junction of the body, tail and hind limbs; the tail is well marked. The "webbing" between the limbs is, I think, a means of holding the figure and is not supposed to represent some anatomical feature of the beast. The same is, I think, true of the markings, lines, dots, etc., which are purely decorative. Reference has already been made to its tusks. The little mounds on either side of the body of the animal, on one side within the "webbing," are spoken of as the "little hills" and are not suggested breasts as one might imagine. The hollows have no significance according to my informants except that they are where the *ni'mbiddo* stands; the mark which looks like a native hoe, I believe, is meant to represent the hoe which has been used in making the figure.

Chinyoro, the hider: the photograph in the article by Dr. Dorey and myself of *Ngwe*.[2]

[1] Op. cit., p. 100. [2] Op. cit., Pl. III, fig. 2.

[illegible] gives an excellent idea of the average figure. It is slender in plan, often with a little hillock in the centre known as *kotoshi kwapapuli*, "the hill of debt," and disposed in the quadrants are four depressions.

[illegible] When the soul are introduced to Chiquno, they stand round in a circle while the *o'wuhiko* stands in one of the depressions with perhaps two of his assistants in others. The *o'wuhiko* sings:

[illegible] "*Ngoro kwapapuli chiwapapuli wawapuli ulapuli kwiluwio, wawi*
[illegible] "The hole [illegible] was I born child I would have died on the plain, mother!"
"*Ngapuli ulapuli*"

or

"I have lived by the great hole all my life; I should have died in the plain."

while all three make movements as of pudding a mass. The depressions are said to represent graves. I believe this is the recognized form but I have also seen an oblong figure with two outlines of considerable masses. *Chiquno* is usually found near *nakwapuni*.

Chiuta, when represented, stands beyond *nkunda*. It consists of two trenches at right angles forming a cross, which are covered over with logs and earth and the whole outlined with flour in a decorative pattern. The end of one limb of the cross is left open and round this opening a screen of grass is made. As the soul approach *Chiuta*, some of the assistants or observers descend into the trenches for the ceremony. The *o'wuhiko* takes up his stand at the centre of the cross and sings:

"*Chiuta, cross, hoshile chiuta!*"
"*Chiuta, mother, come-see chiuta!*"

[illegible] There as everyone says "Listen, listen!" crying is heard "coming out of the bowels of the earth," followed by drumming and the singing of the *chiululu* songs (sometimes [illegible] or *nanda*); a horn is sometimes heard as well as *hululu*, trilling with the tongue against the lips. *Chiuta* is called "the resting place of all departed spirits" and the sounds are said to be the echoes of their doings. The word is not used with elsewhere among the Yao, although it occurs in the *Chinyanja* and in other languages of this country with the meaning "the heavens."

Chiuta is said by Stefanowich[1] to be "a large fish that forms one of the pictures at the Dyapu," but I have never seen it or heard of it, and I am doubtful of the correctness of the statement.

[illegible] *Chiuyi'nukuyi'nukui*. Dr. Dorey's photograph[2] is an excellent reproduction of this figure, which consists of a mound of earth flattened on the top, and decorated with geometric patterns in flour which extend to the ground. In the centre and at the four corners, so to speak, are implanted billets of wood with decorative lines and dots in black and red on the white wood (Pl. X, figs. I, II). The billets are three inches in diameter and project twelve to fifteen inches above the ground.

[1] Handbook of the Yao language, op. cit., p. 141. [2] Op. cit., Pl. III, fig. 2.

Ir Shannon D-5 (on. 1912) 1922 ??? Yao ???

The actual meaning of this figure it is very difficult to ascertain. It may be referred to as "the little hill of debt" signifying, I believe, an idea that everyone owes a debt to his Unpuqu, to his progenitors, and to his own future progeny. It is the spot where medicine has been buried to honor the Unpuqu ancestors, and may be looked upon as the keystone of the ceremonies which take place at *Lepondo*. The derivation of the word is probably from *ku-unga*, "to heap up earth into a mound," or maybe from *ku-unda*, "to teach children manners," but it is uncertain as the word is variously spelled; the spelling I have given follows the pronunciation of the old people. 78

Lepondo: This consists of a mound of earth closely resembling *ching'wadang'wada* in shape and decoration with similar wooden billets at the base, while on the top is often planted a branch from a tree (Pl. X, figs. 3, 4). The word is derived from the verb *ku-panda*, "to plant" and signifies the place which the *n'wimbila* marks for the ceremonies to take place.

Reference has already been made to the assistants of the *n'wimbila*. The chief assistant has been already mentioned; some three or four others who aid him are friends of the *n'wimbila* from his own village. They participate at the essential moments of the ceremonies, singing, drumming, or dancing, and together with some of the *akawazi*, take part in *ukuta*. Beside these, there are regular bands of trained drummers and dancers who attend *Lepondo* and dance in the village in the morning and at *Lepondo* in the afternoon of the day of return. They usually dance *chambo* and *sanje*. They are men who come for the fun of the thing and, of course, may gain a good deal from presents. On so important an occasion, there is much criticism of their performance. Should one of them not dance well enough to please the old people, they may call out, "Pluck off his feathers!" and the unlucky fellow has all his dancing kit and any clothes beside stripped off and he is driven forth naked, the laughing mock of the crowd. 88

Chiputa: The initiation ceremony for girls is on lines very similar to the boys' ceremony. The age at which the girls take part is from about ten to fourteen years, though lately they have been much younger on the whole, in consequence of the older people's wishes that their children shall benefit from its instruction before they come under civilizing influences and the recently introduced mission teaching.

When a number of girls have reached the proper age in a village or group of villages, as with the boys, the *chief* is approached and he arranges a date for the ceremony during the same season as *Lepondo* and for similar reasons.

The woman corresponding to the *n'wimbila* who arranges everything is called *mawai*. Each girl small about to be initiated is looked after by a woman, her *mawai*.

The girls, their guardians, and the mistress of the ceremonies, together with the inhabitants of the villages adjacent, as in the case of *Lepondo*, to a spot some little distance from the main village, called *Chiputa*. Here grass shelters have been erected beforehand and food has been collected.

88| The evening of the first day is called Ipuwa Ipa wukwanzi, or "the day of singing," as singing is kept up far into the night, but the exact significance of the word *Ikwanzi* I have been unable to find out.

[516] The second day is spoken of as Ipuwa Ipa wuwuwu, "the day of washing of hands," (*wuwuwu*, "to wash the hands") when the well are specially instructed as to the necessities of washing hands before preparing food, etc.; precept is followed by practice. The night is spent quietly; for this day's proceedings few people probably will have remained.

On the third day, however, they come back again from their villages in crowds to witness the performance of *wuwu*, Ipuwa Ipa wuwu, "the day of house moving" (*wuwu*, "to change one's abode, carrying goods and shuttle with one"). A representation is given of an onslaught on a village by enemies and all pretend to run away carrying their worldly goods with them. The part of the attackers is played by a number of women who, armed with guns and having donned belts and powder horns, rush in on the crowd from the bush and make prisoners of all they can catch. The men are put in miniature slave-sticks; women who are seen trying to run off with a child on the back, one round the neck and one on each hip, are driven as prisoners into a group. When all the noise and fun are over, the prisoners are released. This is often followed by a mock trial. Two women dressed up to impersonate chiefs of rival tribes, argue an old, imaginary quarrel, usually pretending that there has been a raid by one party on an ivory caravan going to the coast, with stealing of the ivory, while the other party in revenge has sought and killed some of the people belonging to the first mentioned. The thing may be kept up for an hour with much talking and great mirth, all those taking part being women. Finally each party agrees to give compensation for the damage done; each presents the other with bundles of sugar cane, and friendship is reestablished. That night, everyone again rests quietly.

The fourth day is known as Ipuwa Ipa Imapunga (*Imapunga*, "to go round about," referring to the dancing which goes on). Dancing takes place during the day and also the ceremony of *Ankwi* to be referred to later. One of the favorite songs sung this day runs as follows:

[533 539] "*Ikhwala'yi nkwanka' pelpe mwinda wuwuwu nkwaqwa'yu, wuwuwi nankwanqa ngwajiwuwu!*"
"(Take this) a present don't give me two wait for me little girl, dear me! and we'll have some fun together!"

On the 5th day, return is made to the villages. The girl well attended constantly by their elderly women live together for the period of instruction in huts in a special enclosure in the chief's village or in similar enclosures in a number of villages. The well may go out into the village but must go about with bowed head and look no man in the face; they wear bark-cloth called *kwika* and should they meet anyone, they must pull over their faces the kind of hood with which their garments are provided. They may not shave head with razors. If they did so, the latter would sicken with a disease called *ukwanduka*.

[153]

The will then remain for about a month under the care of their guardians, during which time they receive most valuable instruction as to their behaviour to others, especially to their elders and to members of the opposite sex. Their faults are brought home to them and many little pieces of advice given. They are taught the household duties which will be their lot thereafter and they are forewarned of approaching puberty and what it means to them. [55]

During this period their child-names are not used and until their new names are assigned to them, they are called after birds and animals, generally some of the smaller animals, e.g. *Anyingadwa* (*mpingadwa* = the shore rat), *Ahlawela* (*Ninwela* = a big species of rat), *Amdyelye* (*mpelyelye* = the shore). I have been unable to ascertain whether these have any totemistic significance. [56]

The girls are usually given a fright to impress on them the danger of lions; one night on intimation of a lion approaching their enclosure is made when all is dark; then all of a sudden one of the elements around with big theme instead of shore will spring upon one of the girls, generally picking out the worst behaved.

When the term of instruction is completed, they again adjourn to Chipanda for two days where Dyanga is danced on the first night by women, on the second night by men. The first day is spent by a party of men and women in the bush, preparing figures of animals and their dress for the dance. The women wear a small garment of bark-cloth called *mandagolola*, a word which literally means "buttocks of a frog" but which is used with the meaning of trousers and refers in this case to the fact that the bark-cloth is worn round the upper part of each thigh into a garment like a pair of knickerbockers. Round the abdomen and chest are worn bands made of short pieces of small, decorticated millet stalks; similar bands are worn on the legs and arms, two on each thigh, two on the leg, one at the wrist, below the elbow, and one round the upper arm. In the dark these give the body the appearance of being painted in alternate bands of black and white. They also wear a headdress of the same material. [57] [58]

On the first evening of the return to Chipanda, this party of women appears after dark; they dance in a row, advancing and retiring in step, swinging their arms and moving their bodies to and from the *Dyanga*. Other women dress up as men, wearing long beards made of *Mwanga*, a kind of flax plant.

The second night, the representations of animals made of grass and bamboo framework supported by men appear, the elephant, the chameleon, and various antelopes being the common figures, also the zebra made of painted bark cloth. These animal figures are similar to the shapes or shapes of the *Anyanja* and to those of the *Ambo*,[1] but the conditions is unknown among the Tao. [17]

During all these ceremonies at Chipanda, the will remain on carts are the chief spectators and are duly frightened by the performances of the last two days.

[1] Dawson, "Notes on some tribes of British Central Africa," op. cit., p. 206.

The following morning at dawn, each guardian washes her ward, sprinkle her from head to foot with oil and paint on her body new saliva, ropes of beads being worn round the neck, and on the head a little back-cloth cap fringed with beads called *ulimulu*. At a given signal, each guardian picks up her ward on her shoulders and proceeds to run away with her to her own village. This is the signal for the fellows of the girls to run up and redeem their children by making presents to the guardians. Each would be given her own name by her guardian, often the guardian's own or that of the girl's grandmother. The girls are then set down again, a procession is formed and all return to the village, with great rejoicing, as in the case of the boys. The girls then disperse and go back to live with their mothers or grandmothers. The will may be made to give an exhibition of their dancing; they dance *ulumbu*.

On the occasion of the first visit to *Chipuulu*, as a kind of ceremony, there is a ceremony for young married men which forms, as mentioned elsewhere, the second part of their initiation ceremonies at *Ungaga*.

It is known as *Kulukuti* and is a kind of test of manhood. It was formerly considered as important as *Lupumulu*, but now, I think, the last *Kulukuti* has been performed; for the young men of the present day, largely emancipated from chief rule and freed from the ties of tribal customs, care less and less for their old method of up-bringing.

When *Chipuulu* is about to take place, any young newly married men whose wives have not become pregnant are penned to go to their second ceremony. The wife may ask some women friend to act as his guardian or some women may volunteer for the service. Often the young fellow will make pretence of not wanting to go; he may be chased and caught, and with his hands tied behind his back, wearing back-cloth, he is conducted to the ceremony by other men.

Each young man is attended by a woman guardian and during the first visit to *Chipuulu*, they sleep in two rows of grass shade facing each other, the women in one line, the young men in the other line, each facing his woman guardian, with *kwa* in the *kwa*-way between the two rows of huts. Or they may sleep in one big grass shed, each woman-guardian next to the young man she attends, and so in pairs all down both sides of the grass shed, the *kwa* being made in the middle. The young men have to pay for a share in the food and beer made for *Chipuulu*, but each guardian works for her man.

On the afternoon of *Ipuwa Ipa Ungaga*, the young men are taken off to a place in the bush perhaps a quarter to one mile away from *Chipuulu*, *ku-kulwa* " to *kulwa* " as it is said.

Here they are formed into a semi-circle of from half a dozen to ten or twenty of them, each with his guardian and a crowd of the grown-up population from the village in attendance. Good advice is given them as to their behaviour, especially in regard to their wives and mothers-in-law. Anyone who has any particularly bad truth is sure to hear of it now, the mother or father of the young man having arranged that it shall be brought up. The

woman guardian shows to her man red and white beads in her hand and tells him that white indicates health while red means sickness, thereby pointing out to him their deep-rooted beliefs in the disease associated with intercourse or association with women during menstruation. 88 | 892

Then follows a test of manhood. The woman guardian put little pieces of stick (hdwi = sticks or firewood) on their heads and say: [533 534]

"*Kyungu sikumuyu hdwi hen wanin'shumuna ha?*"
"I want give my wife (when sick) firewood of the wanin shumuna tree?"

What is wanted is that when his wife is ill, the husband should fetch the firewood even though he does not know which wanin give best ash; the wanin tree gives mpoy ashes. The little piece of wood a few inches long with a notch in the middle is then handed to the young man by his guardian. He places it on the ground in front of him, bends down, and with a small axe he attempts to divide the stick at the notch. If he is successful, he is greeted with cheers, clapping, and much rejoicing. By proving his power to hit straight, he has also established his manhood; it is prophesied that he will soon have children. Should he miss through nervousness, shouts of derision welcome him and his guardian shows her disgust with his performance. If he is a young fellow well-liked in his village, he may be allowed to make a second attempt. After this ceremony, each couple bathes each other in their shelters by pouring water over the head and body without removing the clothes, thus making brotherhood. Forever after the man must treat this woman with great respect, must not address her for some time, and then only after making her a small present.

The woman guardian picks up the two pieces of the broken hdwi and on the morning before they all leave Chipuin, the mother or sister of the young man gives her a string of red or white beads saying, "Then are to bind up the bundle of wood." The man's guardian binds up the pieces of wood with the beads and gives it to her man. When they have returned to the village, they go to the young man's wife and he presents them to her. The guardian, however, steps in and slips off the beads which she keeps, while the wife, pleased at her husband's success, drops the two pieces of wood into the fire.

During the weeks that the girl will remain under instruction in the village, those young men who have been ha-hdwi sleep in one big enclosure away from their wives and do not cohabit until after the second return from Chipuin is made.

Another ha-hdwi test sometimes, I believe, introduced into Tao ceremonies but really one practised by the Mjwindo people and not proper to the Tao, is as follows: [97]

The guardian lies on the ground, wearing a small loin-cloth, and holding beads in her clenched hands, red in one, white in the other. Her man standing at her feet, bends over her and projects saliva on to her abdomen through a rolled up leaf held between his lips, at the same time showing one of her hands. If he chooses the hand containing the white beads, he is hailed with delight as a man indeed, but should he choose the hand containing

the red beads, he is jeered at and laughed to scorn. In this case, the white beads are held to indicate semen, the red beads menstrual blood.

Lilion: This ceremony is enacted at the time when a young married woman quickens with her first child. *Lilion* (lo-lion, to pluck) refers to the plaited cord put round the woman's neck. The woman and her husband both are present, and in addition, only women, possibly with their babies.

For the man, *Lilion* is looked upon as the third or completing ceremony of his Unyago. He must have been to *Lupande* and *Chipole*, otherwise he cannot be admitted to *Lilion*. If, however, the husband is not eligible, some other man who has completed his Unyago, is married, and has children, may act as proxy to a woman at *Lilion*.

In every district there is generally some woman who arranges and conducts the ceremony. She is called *nalunyu*; naturally, no Europeans have been present at *Lilion* but my information was gained from Kulati, a woman who for years acted as nalunyu in the villages round Malenya's kraal, and Chilundana, her old mother who had acted in the same capacity before her and who had come from the old Mankinga country where her mother in turn had been a well-known nalunyu.

[85]

When a woman quickens with child for the first time, her women-folk visit the local nalunyu, saying, "We are going to shave so and so (naming the woman) and to get harmless. Tomorrow, we start pounding flour. In three days we shall be ready, and you will come over to arrange things." At the appointed time, the nalunyu having partaken of food early because she will not eat for the rest of the day, goes out of the village to some spot a half-mile away in the bush and there sees that all preparations are made and sufficient food collected. The food is supplied by the mothers of the man and woman, and consists essentially of beans (njowa and nguashi), porridge, sugar-cane, and bananas, but no beer.

All being ready, a procession in single file leaves the village for the appointed place, the woman's sponsor leading, the woman followed by the husband and his sponsor (a woman), and the married women assembled from nearby villages. The sponsor is known as mkamwai or akwabas. Neither mkamwai nor nalunyu may have sexual relations with their husbands till after the birth of the child. The woman wears bark-cloth stained black, but may wear blue cloth on returning to the village, while her husband is decked out in his finest clothes and ornaments. They have partaken of food early in the day as they fast until the next day.

Arrived at the place, the men and women take up their positions on mats separated from each other by some twenty or thirty paces, each with his mkamwai. The man's mkamwai sits on the mats just with him and never leaves him throughout the ceremony. The women preserve a dignified quiet but the man is expected to make the most of himself sitting with hands on hips, and displaying his fine clothes were after the fashion of a dandy.

While all the assembled crowd of women sit round in a semi-circle, the nalunyu commences the proceedings, singing a number of songs to the women and the men in turn,

3:Dianaus D-5 (ca. 1912) 1922 FT7 Tao FT7

the other women joining in the refrain. A number of these songs are here given but each 843
cuimaqo has her own favourites which she sings. They are only sung at *Litiko*.

843
Alitele, Kulejiwi: alitele kulejiwi; Chorus *Mkwanjiwusi.*
533
Here you are shaking before laying an egg. Be content then, you must not be running about
539
any more: (Chorus) Call her back for me.

Kulebwa, " to shake as a hen " comes from *ta! ta!* the sound of the hen. Another song is:

Antwejo atale ta. Chorus *Antwejo.*
You must shake, shake, shake, little woman.

A set of songs sung by Kalindi are as follows:

1. *Mtwa ngulumbu, kwandowaku; ewusi!*
   I have a headache, sandy; oh dear me!
2. *Ngulu, jugulu, ekwendi, kwatuku wawuguwusi!*
   Startled (like a rabbit), little girl running like a wild animal.
3. *Ayangulu'wa wulupiwe ulwaku!*
   The rabbit they praise for its cleverness!
   Kwelemuku ngulukwatu kwalimbu; ilwaku!
   He caught (the name of a little bird) and cut his hair in the dambo behind!
4. *Ungji ulwi jua mtimu; ulupanda, Chenjewe ngulu!*
   I have a good heart; I am contented, Chenjewe has gone!
   Ajiyeu wulwatuguu, ewusi! ulwawusi!
   He has taken away all his dancing things, dear me! oh dear me!
5. *Wilimwakupa'wulu, kwwi! wawu ulwaqiku kwalilu!*
   Those who are speaking (in exclamation) show us that we may not!
   Ililwi ngulu ulwaqu, kiwawu, ulilulu, ngulukwu, wujiji; ngulungulukwu wujiji!
   The bamboo has fallen with the wind, they shivered with fear (as shivered plants), (a thing which is stark) (well-dressed).

In native songs, full poetical license is indulged in and it is often difficult to give exact 843
translations of them. The first has reference to the woman making a fuss because she feels 539
ill with her pregnancy; this she is not supposed to do. Number 2 refers to the fact that
she has a new experience which may cause her to be startled, but she need not fear. In
number 3, ngulukwatu is a bird which has a mark running back on either side of the mid-
line of the crown of its head, resembling a method of hair dressing wherein two bands are
drawn from front to back parallel to the mid-line. Chenjewe (number 4) is the name of
a man but this reference is apparently now without point. Number 5 is sung by the cuimaqo
when she hears murmurs of others in the crowd starting to sing other songs; she intimates,
" Here are we singing, let us hear you others who wanted to sing; you are probably afraid
now." In the latter part of this song, words are made use of which have a slang meaning
known only to women. Chilulu is a woman's slang word for the female pudendum; ngulukwu,

3:Stanna D-5 (ca. 1912) 1922 FT7 Tao FT7

843 538 when in child-birth there is delay in delivery it is said of the woman "*Ahidohou*," "she is stuck," from *ho-hidohou* "to be suspended, to be caught by a thorn"; *anjoje*, well dressed, is a slang exclamation meaning "everything, everything is out!" The verse refers, of course, as all *ahetohidoue* will recognize, to the moment of crowning of the morning head during parturition when it appears to be stuck; then suddenly it slips over the perineum and "everything, everything is out."

843 533 The *ashenge* now gives way to the songs of the other women. In different districts different versions of the songs are sung, but the other women will quickly pick up the refrain of the song sung by a woman who has come in from some distance.

843 After these songs, the *ashenge* instructs the woman and her husband in the care they must take until after the child is born. Marchand says, speaking of the instructions "but of the quality, we prefer to be silent." [1] What a pity he allows no one else to judge!

The woman is especially cautioned against sitting with her legs crossed; they must be kept apart lest the child in her womb be suffocated. She is also told many useful things concerning her pregnancy and confinement. The husband is cautioned to cease intercourse with his wife or if he has intercourse, his wife may not lie on her back, lest the child be injured.

While this instruction is going on, all the assembled women cook and eat the feast [151] which has been made for them. When all has been said, the *ashenge* anoints the man with castor oil, which has in the meantime been warmed, and ties round the neck of the woman the *lisiee*, a cord made of plaited bark-cloth with a tassel in front; at the base of the tassel white beads are strung for good luck, and at the end of the tassel, red beads are affixed, having symbolic reference to the haemorrhage at the time of childbirth. The woman wears only a strip of calico of two hands breadth called *ewiee*. She is anointed on the head, body, and limbs.

The tying of the *lisiee* is the sign for dancing to begin. It is a dance in which women try to excel one another. They come with all their tattoo marks on buttocks, thighs, and abdomen renovated; they wear diaper-fashion a narrow strip of cloth, always black in color, and round their bodies numerous strings of beads. With the beginning of the dancing, their other clothes are thrown off and practically naked, they vie with one other in exhibiting their charms and skill in dancing, which afterwards becomes the subject of much discussion among the women onlookers. "So and so is really too old and skinny for such exhibition," and "So and so has buttocks so flat as a wall," while "Such and such a one is fat and beautiful and dances wonderfully, with such abandon," etc. In front of the women [433] is set a wooden plate, in front of the men a mat, and on these are thrown donations by the dancers and onlookers, consisting of beads etc., or nowadays pennies and small silver coins to help to pay the expenses of the entertainment and, in the women's case, to buy medicine which may be necessary should the baby fall ill. When the wedded couple are

[1] Ellmann, op. cit., vol. 1, p. 108.

3:Stanner D-5 (ca. 1912) 1922 FT7 Yao FT7

generous and popular, the domicilium may mount up to a useful sum. Dancing goes on late into the afternoon when all return to the village. 843

The man may not speak to his guardian again until after the birth of the child. The two women guardians, the mkamwai and the mchimpa, as a rule cease sexual intercourse with their husbands during the same period or, at all events, during the last month before the birth of the child.

The child born of a woman who has not gone through *Isiwa* is buried alive. [897]

Chieftainship. The Yao when they migrated to their present country were headed by a number of their chiefs. These eventually settled in different areas adjacent to one another, each ruling over a considerable tract of country. The chief was supported by a number of headmen, each of whom looked after a village; the chiefs and headmen in turn being assisted by the village elders. 622 643

Often among a chief's counselors one found a number of his relatives, and sons and brothers were often made headmen. A man assuming chieftainship often had to displace of a brother of whom he was afraid. 643

Chieftainship is hereditary, the chief's name being passed on to each successor. Succession is to eldest son of the eldest sister or a son of some other sister. Failing these, it passes to a grand-nephew. If there is no acceptable adult nephew, a full brother may succeed.

Macdonald's account of the Mdemeya's succession[1] is, I believe, incorrect. The old Mdemeya (Ndetemdee) was succeeded according to custom by his nephew, Kambola who, as Mdemeya, was called Ndidema. Kuntaja was not a younger brother of Ndetemdee or Kambola, but a cousin of the latter. Ndidema was succeeded by a nephew, not the eldest but the second son of a sister, the eldest having already succeeded to the chieftainship of Kuntaja was therefore ineligible. The present Mdemeya will be succeeded by a grand-nephew, the son of a daughter of his eldest sister, his sister having no sons. [114]

A successor inherited all the wives and slaves of the deceased chief and all his goods and chattels, guns, ivory and gardens. Any small possessions might be divided among the deceased's children and in the case of guns, those who had always used them often held children not to be separated from their weapons; these children were often allowed by the new chief. 643 428

In the same way, any ordinary man's successor is his nephew, the son of a sister, who inherits all goods and chattels and slave wives, but not free-born wives, nor gardens, which go to the free wives. Stock is generally divided among the children.

Before 1891, when a British Protectorate was formally declared over Nyasaland, each chief ruled supreme. He was consulted as to the dates for Unyago; he directed the harvesting, etc.; he punished war and generally was paramount among his people. It will be seen, therefore, that he was a busy man, but he received no direct remuneration. His wealth consisted of slaves and ivory. Slaves he obtained in warfare and as blood money, 643 [554]

[1] Op. cit., vol. i, p. 100.

3:Stanma D-5 (ca. 1912) 1922 FT7 Tao FT7

643 ivory by his own hunting parties or as a kind of tithe on other hunting expeditions. The ground tusk, i.e. the tusk on the side on which the elephant falls when killed, was the chief's share. In the same way, the hind legs on the ground side of any game animal killed was sent to the chief. He took a share of the spoils of war and most of his people yearly gave him either service in building houses, etc., or kind in the form of food-stuffs, but he enforced no service and levied no tax, except for the making of a new burial place.[1] New settlers in his village were expected to invite him to drink beer made with their first crops.

In return, he always provided cloth to invest the body of the dead. He also made presents at the time of *Unyago*.[2]

A chief's life, therefore, may not be "all beer and skittles," though he consumes a good deal of the former and a kind of skittles[3] was a favorite pastime of one of the Malenyas. A saying embodying this idea was used when pleading for a man who had 658 committed adultery with his chief's wife: "one who carries a tortoise (on a string over his back) is likely to get his clothes soiled"; a man has to put up with the troubles his belongings bring him. So a chief must bear with his own people who do wrong.

Ample opportunity for exercising such forbearance was provided, since the chief was 643 hereditary adjudicator of all disputes and dispenser of justice in all crimes. The headmen 652 did the same in a smaller way but appeal could always be made to the chief. Cases were heard by the chief sitting in council. He and his headmen and elders would assemble in the village open space and here cases were stated, often at great length.

Each party to the case would employ some man well known for his powers of oratory as leading counsel. The speaker for the plaintiff would start proceedings by a recital of all the evidence he could collect. After him would follow innumerable speakers, whether actual witnesses or not, each telling as good a story as he could, and the defendant's case would then be put by his representatives. There was no cross-examination but at the end, a summary was made and judgment given. A chief often took the advice of some one of his old men whom he trusted.[4] The chief received no payment for his services, except in the case of murder; neither did the "counsel" receive anything for their efforts.

674 **Crimes.** Causing the death of a person by witch medicine, *wanzi*, was the most heinous 654 crime; a *wanzi* ordeal might be held, but if the offense was proved, burning was the punishment which usually followed.

649 The offense second in gravity was adultery. This might be expiated by payment or by death, according to the circumstances under which it occurred; castration was often 649 practiced in the case of a chief's wife. All death sentences with the exception of those

[1] Vide supra, p. 361. [2] Vide supra, pp. 348, 350. [3] Vide infra, p. 380.

[4] The old Malenyas (Makonde) has some very fine men among his counsellors. Kamtoya and Chingala, the latter renowned for his oratory, were his chief advisers in legal matters. Mdabla, a slave, was his master in all personal and family affairs, while Chakumanga was in charge of all ceremonies and served with his assistant, Mpondo, as high priest on all occasions of importance. Others acted as his counsellors, such as Mkapale who always went as my attendant to the dispensary, among others he was known as Kibaigha.

3:Swanson D-5 (ca. 1912) 1922 F'77 Yao F'77

for witchcraft were carried out by struggling with a piece of cotton at a place appointed for the purpose some miles from the chief's village.

There was no case against a man who seduced an unbetrothed girl, the latter being considered entirely at fault.

After divorce, the children always remained with the mother. The man left his wife after the case, saying, "I will take my spear and some of the goats and chickens, but the children will always know their father."

Murder was a question of compensation to the deceased's relatives and was not punished by death.

Stealing was a serious offence but many who were found guilty were rather despised than punished. The thief with the stolen goods tied about his body but otherwise stripped naked would be driven through the village and punished with sticks to the sound of drums and horns of derision. Most crimes, however, might be punished by exacting compensation. Payment took the form of goods or slaves. In the case of murder, the accused might have to pay several slaves to the deceased's relatives, and in addition, a fine to the chief for spilling blood, consisting perhaps of one slave. The amount of compensation expected was mentioned by the plaintiff in the case. One of the expressions used was, "My compensation must cover an ant hill;" meaning enough slaves, standing hand in hand, to surround an ant hill; ant hills in this country are sometimes very big. If a man had no slaves, his would and his relatives or he himself might be forced to become the slave of the plaintiff. There is a saying anent this practice:

> Chikwakili mwikhwala wakhala wakwa!
> The monkey they tied (with) tail his (own).

Slaves passed over to a man in payment for crime became free men; they were no children to the village and might even be adopted in place of a murdered individual.

When compensation was made by the defendant to the plaintiff, the latter always returned some part of it as a sign that friendship was again established.

Goods or money received in compensation for murder, i.e. blood money, might not go for the purchase of food or clothing. Detection of a guilty party by means of magic and proof of guilt or otherwise by ordeal poison are dealt with elsewhere.

Stealing anyone into giving something for nothing, obtaining goods by false pretenses, were not considered a crime, as anyone was "fair game." For instance, a party of people would employ a man with a load of fish, saying they had been ordered by their headman to commandeer it. If the man parted with his fish, so much the worse for him; if he showed fight, he was suspected and friendship made with a give-and-take of fish and small. Such bluffing is called *kulipa mtima*, "to suit with them." To add to their appearance of bona fides, the party might have secretly borrowed some well-known article belonging to their headman.

567 Slavery. Slaves were acquired by capture or purchase, or were received as payment. Prisoners taken by the council of one chief in a fight with the partisans of another chief became slaves. Slave raids were also made by the Wayao upon the weaker Anyanja or again expeditions were sent out hundreds of miles away into the Chipeta country to buy slaves.

[512] Slaves were a man's goods and chattels, to do with mainly as he pleased, but no man might kill a slave without bringing the case before his chief and obtaining consent. While some were bought and sold and sometimes found their way into a slave caravan bound for the coast, many, perhaps the majority, lived the life of ordinary individuals in the village. A man who was unhappy in a village and wished to escape from his vassalhood might run away to another village and then council some act so that he might be claimed as a slave. The custom was to go to the village and sit by the site of a house which had been pulled down after the death of the occupant, and the saying is, "He has been called by the dead man's spirit."

[554] Many a slave has become an important man in the village and slaves were often the trusted advisers of their chiefs, but there was no means of becoming a freeman. Neither a slave himself nor a second party could purchase his freedom. A slave capturing another man in warfare, for instance, could not ask for his own freedom in exchange for his captive, but anyone so taken became, in a way, the slave of a slave, and the master could not sell the second slave without the permission of the slave captor. An old slave might often be allowed to do just as he pleased and to all intents and purposes was a free man, but he was never actually freed. A slave might earn a return for work done for others than his master; part of this he would probably give to his master, but there was no regular tax upon such earnings.

The idea in accumulating slaves seems to have been to increase the population of the villages and hence their power and prestige. This is borne out by the fact that marriage [512] between free men and slaves was allowed. Marriage between a free man and a slave woman was unaccompanied by any ceremony and was therefore rather in the nature of recognized concubinage. Such a wife, if unsatisfactory, could be sold out of the village, but generally she was well treated. The children of two slaves were of course born into slavery; the children of a slave woman by a freeman husband, were not quite emancipated, in the father could not remove the child from the village of the slave mother's master, and in very extreme cases, it might be sold by him.

Women might marry slave husbands and often a master married his daughters to his slave men whom he thought well of. This amounted to a guarantee to the slave that he [512] would never be parted with. A woman with a slave husband could not leave him informally; she could not sell him, inasmuch as women have no property.

Land Ownership. The ownership of all land was vested in the chief, but he appeared to hold it in trusty for all the people over which he ruled. Headmen had no land rights.

3: Stannus D-5 (ca. 1912) 1922 FT7 Yao FT7

There has never been any shortage of land and therefore the plotting out of gardens was a matter which caused little trouble. A man wishing to make a new garden the next season simply marked the site in the bush by scoring some trees or hoeing around some patches of grass and tying the grass ends into a knot. If anyone else came along and hoed this plot, the man who had marked it out still claimed it and need not pay for the hoeing done. Whenever a man was doubtful about a piece of land, he would ask advice of the headman of the village. 423

When an abandoned garden had become overgrown, anyone wishing to take it up applied to the headman who sent him to ask the original owners whether they wished to take it up again. The newcomer could take possession only with their permission. 361

Often if a village were moved, during the first season the people simply put up shelters in their gardens. Later, the site of the village was chosen and around it a medicine man sprinkled medicine to insure happiness and prosperity. The tree from which this medicine was made became sacred to the village and might not be used for firewood, or was subject to any other taboo the medicine man might care to make. He might also say, "In this village there shall be no pounding of grain at night," etc. 423 [789] [778]

If a village were to be built near a spot previously inhabited, medicine and offerings were made to the departed spirits of the former occupants to put them at rest and "open" the place to the newcomers. The beer-pot from the grave of some former chief or headman, who was supposed to have directed the destinies of the old village, was brought to the new location and beer placed in it to insure his continued guidance. [769]

In the case of a village into which a number of men had married, the sponsors of the wives went to the sponsors of the husbands and asked permission to move the village.[1] Later, beer was brewed in the new village and the sponsors invited to come and drink and "put foot in the new village." [203]

Relationship. Family relationship among natives presents certain difficulties to the European accustomed to equivalent relationship of males and females on both sides of the family. In the diagram below (Fig. 1) the relationship of the two children (C 5) will be traced. The mother and father (B 10 and 9) are the ambiahu and nsoe but are addressed as ewoe and atati. The maternal uncles older and younger than the mother (B 11 and 13) are called ahombwe and their wives (B 12 and 14) ahwapwe. The maternal aunts are addressed as ewoe, mother, anyone older than the mother being distinguished as ewoe wakulungwe, "the bigger" (B 15), a younger aunt as ewoe wanandi, "the lesser" (B 17); their respective husbands are addressed atati, atati wakulungwe (B 16), and atati wanandi (B 18). On the father's side the uncles are called atati wakulungwe (B 1) and atati wanandi (B 3), respectively, for those older and younger than the father, and their wives ewoe wakulungwe (B 2) and ewoe wanandi (B 4). The paternal aunts are called atati wakungwe (female uncles) (B 5 and 7), their husbands (B 6 and 8) atati. 593 601

[1] See supra, p. 280.

The children of maternal uncles (C 6 and 8) and of paternal aunts (C 5 and 4) are called *ondoo ashomwami* (dog. *mwami*), and, conversely, the children of maternal aunts (C 7 and 9) and of paternal uncles (C 1 and 3) are called "brothers and sisters"; one would address the other as "*shomwali*" or "*ashimwane*," but either is relate to the other.

It is interesting, therefore, to note that cousinship is of two kinds: the relationship between a child and his maternal aunts' children or his paternal uncles' children is uncle, whereas the relationship with his maternal uncles' children or his paternal aunts' children is cousin.

It is easily understood why the maternal aunts' children are considered as brothers and sisters, as among the Yao, matrilineal descent is the rule, the children taking the clan of

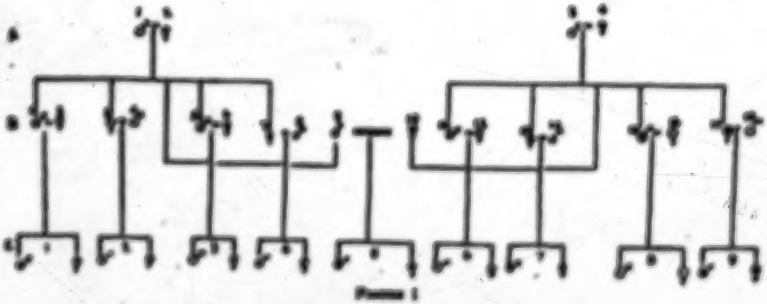

Figure 1

the mother. In the diagram, this is indicated in black. That the paternal uncles' children bear the same relationship would seem to indicate that matrilineal descent is not absolute but that dual descent from both parents is recognized.

Children C 5 may not marry C 7 and 9, nor C 1 and 3. In the case of the former, this is because persons of the same clan may not marry, but in the case of the latter, no such reason is given but they are simply said to be brothers and sisters. Children C 5 may marry their cousins C 6 and 8 and C 2 and 4, but this is not very common as it is said such marriages are always unhappy.

The wife of a maternal uncle (B 12) speaks of her nephew by marriage (C 8) as *mwana*, husband, because, in the event of her husband's death, this nephew would inherit from him and he might marry the widow.

A parent-in-law or child-in-law is called *mkwapwa* indifferently. Paternal and maternal grand-parents, and great-uncles and aunts are all called *ambuje*; a grand-child, *chimbuda*.

The words *atati* and *anna* commonly mean father and mother, but, as given above, there are other words for these two parents, whereas *atati* and *anna* are applied to certain aunts

and uncles as well. I am inclined to believe that the words primarily refer to a person's maternal and paternal relatives whose children bear the relationship of uncle to the person. A strange point, however, crops up, namely, that the paternal aunts are called *atati* (*atati wakungwe*) and their husbands *atati* again. 601

An elder brother is *akulu*, his younger brother *mpamkwa*, a sister *ukwabo*, *ukwabo wamadi* and *ukwabo wakulungwe*, younger and elder sister.

Diseases. Apart from old age, the native recognises in all illness and death the hand of an enemy or the result of transgression of some custom: some one has made medicine against him, or he or some one else has broken a custom founded on superstition which is visited on his head. These ideas are so deeply rooted in the native mind that it is with difficulty any appropriate treatment will be received. They rely, rather, on some medicineman to cure them by medicine more powerful than that made against them. Even an ordinary accident or an attack of pneumonia is accounted for in this way. 753 754 164

The names given in speaking of sicknesses are, of course, applied rather to symptoms, but in some cases where the symptom named is pathognomic of a disease, the word practically stands for the disease. The word used may imply the supposed cause or refer to a resemblance to some object, or again simply state the part affected; thus *chitumbo* (the belly) meaning stomach ache, *mwa* (eyes), conjunctivitis, etc.

The following words most of which are found in the Reverend Dr. Hetherwick's *Yao Language*, give some idea of the Yao native's conception of disease. The sense which the above authority gives is not always quite the same as I would venture to give. I shall not enter into the question of the diseases as such but only in so far as they bear on customs, etc.

The word *chikwale* signifies any disease or illness; *chilupa* and *chipindupindu* refer to epidemic diseases; the former refers to a disease of fowls and dogs characterized by wheezing and hence is commonly used for bronchitis in man. *Chipindupindu* refers to a series of deaths from a cause unknown to the natives. The word *chondo*, which Hetherwick gives as meaning a plague, rather means arrow poison, I think. 164 753 192

Chondwe: a liver disease of fowls.

Chipupu: a congenital deformity of any kind (*kupupwa* = to be born with).

Chitwalwa: a patch of white hair on the scalp of congenital origin.

Chitwanwi (a wound): the word used for a birth-mark or freckle; behind fetishes is also included. Children examine each other to see how many "wounds" each has; anyone with none is made fun of.

Chitwabwandi (*bwabwandi* or a big hump): a hunchback.

Chitwalala (*kwatalala* = to split): a "splitting" headache, or more commonly, medicine by means of which the possessor can inflict pain or death.

Ching'alang'ala: a localized pain in the head.

Chipwapwapwa: giddiness.

3:Stanford D-5 (ca. 1912) 1922 FT7 Yao FT7

164
753
192

Chibuli: deaf and dumb (Chin); the word is used in slang to mean impotence.
Chiwindu: an old word meaning high fever.
Chilundulundu: "*wakupwa wanela chilundulundu,*" the woman died in confinement without giving birth (suspected). The sense of dumbness and constipation are secondary.
Kubhlwa: constipation.
Malundumpili: colic; *Mapupu,* rumblings in the bowels, borborygmi.
Mundindili: "pins and needles."
Chiwu: sore and swollen gums, pyorrhoea; has been translated scurvy.
Chipupudulutu: hardened skin, like a corn on the hand.
Njumbu: without eye-lashes, as result of disease.
Nkundapwi, Lumpumbisi: indistinctness of vision (Hetherwick).
Lumu: watering of the nose; nasal catarrh.
Mundulu: the secretion at the corners of the eyes in the morning, also the purulent secretion of conjunctivitis (Hetherwick translates "watering of the eyes").
Namlu: nasal mucus.
Chindundupulu: crusts from the nasal passages (Hetherwick translates merely "nasal mucus").
Lihumudu: cough.
Chimupupu: after-pains of labor.
Ngwilwi: hiccough.
Ng'wung'wu: nystagmus, from a verb meaning "to look from side to side aimlessly."
Pungu: any skin eruption supposed to be due to eating various substances, chiefly meat.
Ku-hlimudu: to have a rash on the body of the nature of urticaria.
Mpukulu: the name of a condition in which the place where a man passes water becomes whitened; hence it refers to cystitis, lithuria, etc.
Chikwudumu (*Ikwudumu* = a snail): the white on the ground resembling a snail track left by a man with *Mpukulu.*
Nikwi or Miki: smallpox.
Nikupulu or Kuwlulu: chicken pox; this term may also include other diseases with similar rash, i.e. modified smallpox and pemphigus.
Chiwulu (*ulumbu* = an elephant): elephantiasis.
Matumu: leprosy.
Mapumpumu: yaws (*chimumbi,* given by Hetherwick as "redness alone," is a Chinyanja word for yaws).
Chindulu: (Swahili) syphilis.
Chimumu: (Swahili) gonorrhoea.
Lukulukuku: whooping-cough.
Chibulu: measles.

3: Swanson D-5 (ca. 1912) 1922 FT7 Tao FT7

164
753
192

M'bunu: antlope.
Chindule (*ku-ndule* = to scrape out): diarrhoea, dysentery.
Chipunga (*ndunga* = warthog): swelling at angles of jaws, mumps.
Limulilu: nasal or bronchial catarrh.
M'undu: heredity; mumpumpu, delirium of fever (Bothawitch translates as parietile tuberculosis).
M'udu: sudden.
Lidzwaiso: goitre (Identic: pseudo-adenal).
Kubwandu: bowedness of hands and feet.
Chimupupudu: a pustule.
Chimudulumbu: a boil.
Chilungu (*ngungu* = the spotted guinea-fowl): ring-worm of face.
Limuno: any mark on the skin, e.g. birthmark, pigmented spot, ringworm, scar.
Bumuno: a wart.
Nkundi: a burn of the skin.
Lipulumu: a bubbled scar (Bothawitch gives "bull").
Lumpu: a rash after shaving.
Limbu: a blister.
Chipulumu: a wheal after a blow or an insect bite.
Chilipu: oedema of a limb.
Chipupu: whitlow.
Lipulu: an abscess; worm, pus.
Limdupu: an abscess; (*ku-undu*: to swell).
Limunpu: a sore or ulcer.
M'bunupunupu: a chronic ulcer.
Linindulu (*ku-undu* = to come to life again): an ulcer which heals and then breaks out again.
Limbudulu: secondary enlarged glands in groin or elsewhere from a sore on the foot, etc.
Nkuti: Any lump movable lump under the skin, e.g. sebaceous cyst, patella, ganglion, etc.
Chikwai (*ku-kwa* = to bite): chancroids.
Upuru: itch, scabies.
Pundu mkumuru: thrush.
Lumupu: diarrhoea in infants with green stools.
Lukuwu: passage of blood in urine; Urinary Bilharziasis.
Ky'ulu: ulcer or lesions of cancer.
Ching'ung'u: rabies in dogs.
Linkhini: sound-worm of man.

3: Sinamua D-5 (ca. 1912) 1922 FT7 Tao FT7

164
753
192

Mangangabai: round-worm of dogs or found in the ground.
Wabangwe wajomo: a barren woman (lit. dry).
Chimangala: sterility in the male.
Chipangala or gajo: an impotent man or *Mwalu jwa ipapo:* a useless man!
Mpuli: impotent.
Mdwa (*ku-dwa* = to cut off): a "cut man"; a man seen after he has been castrated.
Mtanga: a eunuch after he has become fat.
Hamtondwa (colloquial Chin.): the word is derived from *kutonda*, to mistreate. Natives say that when disturbed, the insect of this name which is a beautiful, *Hopliopsis dorsali*, makes water which falling on the skin of the passer-by causes ulceration. I have seen a variety of cases of extensive ulceration due to syphilis, etc., assigned to the effects of this insect; I have, however, shown that it does secrete a corrosive fluid from pores at the sides of the body which dropped on to the skin will dissolve the superficial layers of the epidermis and should such ulceration become infected, ulceration may, of course, result.
Uwalwa: tremor, similar to the movements of one of the wazya.
Mwijenje: tremor of old age, paralysis agitans.

164
192
753
608

The preceding short list of words will give some idea of the richness of the language in some directions and also its limitations. There now follows an account of diseases which are based on superstition, generally connected with the idea of uncleanness or the transgression of some rule of life. Whatever the symptoms, if there has been a transgression, the disease is labelled with the name of the disease supposed to follow the act. Similar diseases are to be remarked among the other tribes in the country; some of those relating to the Anyanja I have already mentioned,[1] and the following may be read as an amplification of the remarks previously made.

Chinpere (*Kenpere* Chin.) from *kenpa*, to defecate: At the birth of a child, if the contents of the bowel (meconium) are passed before the body is born (as often happens in breech presentations), the child is said to be "born with disease." One of the women attending the confinement will always go out and inform the husband of what has happened, saying, "*Ayali 'shoma*," (it is born well) or "*Ayali ni chilondo*," (it is born with disease). This only refers to the passage of meconium and not to any antenatal disease.

When this significant event has happened, the husband may not occupy the same sleeping mat as his wife and have intercourse with her until the child of its own accord crawls from the mother's sleeping mat to that of her husband on the other side of the hut; *Ku-pitiza mwanake ku mapere* (*Ku-pitiza mwana ku mpere*, Chin.) = "to go the child to the mat." Should the husband disregard this custom, he will sicken with *Chinpere*. The symptoms commonly ascribed to *Chinpere* are pain in the loins and in the hypogastrium.

[1] "Notes on some tribes of British Central Africa," op. cit.

3:Dennan D-5 (ca. 1912) 1952 FT7 Too FT7

This has led to the word being translated as Bright's disease (Rutherford). No symptoms referable to the pedicels are included under this disease. *Mawa* (Chin. *Kapende*): hydrocele; said to be another sequela. A woman called by the movement of her infant after birth is not considered unclean and intercourse will have no ill result to the husband. Sometimes in the event of *Ayoli ni chilende*, recourse is had to the practice of intercourse between the woman and some other man. She is then rendered " clean " and the child who is not her husband will not sicken. Such a man is called *Litsoso* (see Widenhand).

Lemer: a disease similar to *Chinyere*, which inflicts a man having coitus with his wife who has not been cleansed after abortion.

Kwimbede: a practice indulged in if a new-born child falls ill; the word refers to the " hardening " of pots when they are being made and the same idea is applied to the child. If the new-born child gets fever, the illness is ascribed to the *nwendo nyelipwere* about the veins of the navel. These are cut off by an old medicine-woman and the blood allowed to drop into a mortar; water and stone leaves are added and pounded together, and the mother attired only in a cloth reaching to the loins, washes her breasts with the liquid while the baby is supported on one thigh; the child is then given the breast and the mortar, turning her back on the mortar, pushes it over backwards with her buttocks.

Ya ngale (from *ngale*; Chin., *dza mdzere*): If a woman who, after the death of a child, has not been cleansed by medicine, adds salt to her husband's food, he racing it will sicken.

Tsempe (a Chinyanja word): If a man or a woman commits adultery and any member of the family falls ill, the natives say the illness is due to the unlawful act; the sinner is said " to have gone in front of the other "; *tsempende* (*tsempendowa*, Chin.), " he has gone in front of," from *ku-pende* and *ku-pendowa*, to go in front of, or *ku-ompela* (Chin.), to go slyly in front of. Hence the word *tsempe* which also is used loosely for *dim mdzere*. If a child who according to custom has gone to stay with the grandmother, returns to his parents' house and the parents continue to have sexual intercourse, the child may sicken; it is said that the house is " hot " for the child and its disease may be called *tsempe*. Or if a child which has been weaned is again given the breast after the mother has resumed cohabitation with her husband, it may sicken with *tsempe*. And the husband is called *tsempende*.

A child which is suckled after menstruation is reestablished, is not affected by any untoward symptoms.

In the event of a woman dying in childbirth, if it so happens the husband has committed adultery, he is held responsible for the death and her relatives claim very heavy compensation.

Ku-tsemedzwa, to be met with (*ku-tsemedzwa*, Chin.): If the act of coitus causes the onset of menstruation and the husband cannot draw back in time to prevent himself being contaminated, he will sicken, and he is said " to have met with (it) " when referring to his illness. In this disease, the penis is said to withdraw into the bladder. Best from the root

of the box, *shuptiele*, and the red part of the flower of the banana, destitute on account of its shape, are used as medicine for this disease.

Kwindanyana or Ndoko: If a man dies and his relatives out of the food-stuffs left by him, such as corn from his grain-store, before they have been cleansed by medicine, they will sicken with *ndoko*, the symptoms being nausea and vomiting. The word *kwindo ndoko* is also used for sickness due to partaking of food cooked by an unfaithful wife.

Chipute is a word used by both Tao and Anyanja to denote a disease which a man contracts from adulterous intercourse. Scott[1] derives the word from *ku-puta*, to stick to; the woman is so influenced by medicine made by her husband that should any man have adulterous intercourse with her, the disease will "stick" to him, while it will not affect the woman herself nor her own husband. Both the disease and the medicine made to cause the disease are known as Chipute. Secondarily, the word has come to be used for any disease which may be gained by sexual intercourse and is sometimes used as a general term for venereal disease.

Chipute cha shipuele (*shipuele*, a knife): A man who is going away from home obtains medicine and destroys his knife with it. As he leaves his house to go on his journey, he pretends just to remember his knife and calls for it. His wife brings it to him and it is put into its sheath; he then goes out and sticks it in the grass of the roof of the house. The medicine is made from the tail of a dog, an animal in which urine is prolonged and the two animals cannot separate. Should the wife commit adultery, it is supposed that just as the knife was unsheathed and destroyed with dog medicine, so the adulterous pair will remain fixed as twin and be found out. This may be called *chipute cha kutego* (*kutega* = to set a trap).

The Anyanja make medicine with the same idea, *chipute cha kutekera* (*ku-ikera*, to set a trap, Chin.); medicine is put round the house and any man creating the medicine and committing adultery with the wife will be trapped. In all cases, the man will become ill.

Chipute cha mtuti, *mtuti*, blood (*mututi*, Chin.): disease caused by intercourse with a menstruating woman. Blood is passed in the urine.

Chipute cha mnwa, *mnwa*, pus (*mnjiwa*, Chin.): practically venereal gonorrhoea.

Chipute cha kwenji, *kwenji*, cotton (*kwaja*, Chin.): the discharge from the urethra resembles a thread of cotton; it is supposed that this thread can be pulled out endlessly.

Chipute cha ushuku, *ushuku*, the white ants (*chiwuo*, Chin.): so called when a man passes whitish yellow debris in the urine. It is supposed that when he has finished passing water, white ants rush up the pavis and enter the bladder, thus causing the pain which characterizes this affection. The origin of the idea lies in the fact that if one sprinkles water or urine on the ground near white ant burrows, the ants will come to the surface of the ground in numbers and make a rustling sound.

[1] D. C. Scott, a syllabic dictionary of the Shanjinda language, op. cit.

Other hypothetical diseases which are caused by disturbances to women are mentioned under various other headings. *Kwiyu*: a disease generally characterized by abscesses of the legs but in some cases by pains in the back, or bloody (pus) for a variety of symptoms, is said to be caused by the entry into the body of a worm which lives in water-pools. This worm which I have had identified is a gordius worm and not known to be parasitic in man. *Lamti*: When a man kills another in battle, he will sit upon the belly of his victim, otherwise he believes he will sickness with heat and his own belly will swell up like that of the corpse whom petrifaction sets in. He is supposed also to hunger after more killing and blood. *Lilungu* is the name of a supposed disease which kills off one child after another in a family when they are about six months old. Congenital syphilis naturally suggests itself but I have never been able to verify this idea. *Lilungu lya bonto*: a supposed disease which causes the death of the first child when the second is born, the second when the third is born and so on, whatever the intervals between the births. Each child is said to push (*bo-tola*) the previous one out of this world. Under these circumstances the disease is ascribed to something wrong with the mother or father and they are exorcised by a medicine-woman or medicine-man, and any meconium or an external pile found will be cut away.

If a snake bites one bitten, the man will prove fatal. If a crocodile emits a groaning sound when sinking his victim, though he escape he will certainly die.

Treatment of diseases. Of surgical treatment there is very little to be noted. Nothing in the way of operation is performed with the exception of circumcision (see Legends).

An abscess is allowed to burst, the smallest tumor is left untouched, but numerous chyles which are not rare, attended only by a few pustules, are snipped off.

The natives cannot extract teeth. They are incapable of rendering any assistance in cases of difficult labor. Dislocations are not recognized as such, but fractures are treated by the application of wooden sticks placed at intervals round the circumference of the limb parallel to it and held in position by twisted pieces of bark string (Pl. XXII, fig. 6). The principle of the tourniquet appears to be unknown.

The only instruments used consist of a small knife for incision, a cupping-horn, and a primitive form of hand for administering enemata (Pl. XXII, figs. 1, 2, 4). The knife has a triangular blade with a stem which is commonly twisted at one of the corners. The knife is used for non-cupping, bleeding, and circumcision (Pl. XXII, fig. 3). The cupping-horn is a small horn of a calf. The open is placed and after application to the part, suction is made with the mouth and then the hole sealed by wedging a piece of tamarind over it with the tongue. Six small incisions are made in the skin for the withdrawal of the blood. The cupping-horn is called *ahoni* (*ahonila*, Chin.). Cupping is used for headache and for pain in the chest and back. The enema-hand, *ahighu* (*ahighi*, Chin.) is made from the neck of a gourd to which is attached a hollow stem for introduction into the anus. Half a pint of an infusion of enemata is injected for constipation associated with pain.

D-5 (on. 1912) 1922 FT7 Tao FT7

Simple bandage is practised for relief of pain or again "medicine" may be introduced into the wound. Such medicine usually consists of charcoal prepared from various vegetable substances. There is no evidence that any active medicinal principles are involved and the most that is attained is probably a certain amount of counter-irritation. For pain, a string is tied tightly round the part; thus for headache one sees a string tied round the head and doubtless some relief is felt when pressure is made on the temples. A man with an abscess of the hand or foot will tie a string round the arm or leg, but I have never seen it so applied as to produce any effect comparable to that of Bier's hyperaemic treatment. By analogy a string may be worn round the chest for pleuritic pain and by limiting movement may be effective. In many cases a charm is attached to the string as an adjuvant.

The use of drugs as such is widespread but I have very little evidence of their efficacy. The methods of administration are various. The vapor bath is often used. Over a pot of water in which have been dropped herbs and stones heated in a fire, the patient squats enveloped in a blanket and is thereby subjected to the action of the medicated steam. This method is also adopted for enemas. A case which came recently to my notice was the wife of a native hospital dresser who, suffering pain in the abdomen, avoided my ministrations and consulted a female medicine-maker. She was given a vapor bath as above described and after a few moments, the medicine-woman slapped her on the back and told her to rise. The old woman plunged her hands into the pot and brought forth some human hair tied to a piece of cotton and a human metacarpal bone. "These are what troubled you," she said — for £1! This is called *ba-lapeleke*, to take evil things out for.

Various powdered barks and leaves are applied to ulcers and appear to have an astringent effect in some cases but the majority seem to go from bad to worse. No other external applications have been observed except use for scalds. Incision of the skin and insertion of "medicine" have been mentioned above.

Large numbers of vegetable products are administered by mouth, always in the form of an infusion or suspension. It is probable that a number of these are really beneficial but I am not able to speak in detail of their effects. Many astringents are undoubtedly used for diarrhoea. Herbs containing oil are used for gonorrhoea.

Apart from simple medicine dealt with elsewhere and commonly employed for purposes outside disease, charms are used for the prevention and treatment of ordinary diseases and injuries. There are only a few varieties of charms. A vegetable substance, root or stem, may be worn on a string round the part of the body concerned. Thus one sees a couple of little pieces of stick, *ubiji*, on a string tied round the head, round the arm or round the chest for headache, a whitlow or diarrhoea as the case may be. The medicine may be in the form of a preparation, generally charred vegetable substance, and is made into a little packet in leaves and cloth worn most commonly round the neck; it is called *kalowa*. Such a charm is supposed to be effective against all ills.

Again, charm medicine may be contained in various articles which are also generally worn round the neck. The teeth and claws of the beasts of prey are so employed, generally arranged in pairs bound together so as to form a crescent and suspended from a string. The teeth of crocodiles, lions, leopards, and the claws of the same beasts and of some large birds of prey are thus employed. The teeth etc., are in themselves charms against injury, probably against what one might call homoiopathic injury. The idea of stuffing them with medicine is probably a secondary consideration, a process of fortification of the charm so that its use seems to have a more powerful influence. It is interesting to see of late years that the native, recognising the decorative value of these crescent-shaped amulets, has begun to copy them in lead and ivory. A series of these of graduated size is worn as a necklace by women.

When a medicine-man is consulted, part payment is made in advance, "payment to go and dig medicine (*ponda*)." The rest of the payment is made when the cure is effected. Should a patient not be satisfied with his treatment and wish to consult some other medicine-man, he pays to the first a quarter of the fee he would have paid if his cure had been effected; this is called "paying him to get his medicine away." Unless this is done, should he recover later, he will be liable to claims for full fees from all of the medicine-men he has consulted; each will say his own medicine has gone on acting and has effected the cure. A medicine-man may take a case he is treating into his own house.

In prescribing medicine, very particular instructions are given with an exchange on certain things which may or may not have some use and significance. A medicine-man in 1901 at Mulanya's, who inoculated every one in the foodsend with bullet proof medicine, said that no one must step across a *mwiri* (pestle for pounding grain), and no one must eat the leaves of the sweet potato.

A medicine-man always partakes of part of the decoction he is giving to a patient to show that it is harmless; I think these preparations are mostly inactive. I should hate to sample all the water all I have prescribed, though many natives have had suspicions about me when I have not done so.

Poisons. Though there are a large number of species in this country, both vegetable and animal, from which poisons might be extracted, those that have gained any reputation among natives and have come under my observation are but few in number. *Mwai* (*Mwabai* Chin.) "the ordeal poison," is the bark of *Erythrophloeum guineense*. The natives distinguish two varieties of *mwai*, the two trees differing slightly in leaf, flower and bark; *mwai* is the *Erythrophloeum guineense*, the second variety known as *mpwanjile* is doubtfully an allied species. *Mwai* is the poison employed in the poison ordeal.[1] It is administered in a poisonous dose as a decoction of the bark, recovery or otherwise depending on whether or not the poison is vomited by vomiting. Natives give as the symptoms headache, giddiness, disturbances of vision, vomiting and purging, with slowing of heart beat. *Myo-*

[1] See below, p. 288.

[19] 278 [illegible] is a more deadly poison and is not used in the poison ordeal but is administered with intent to murder; it is usually given mixed with beer or in porridge. Death is said to be [illegible] in a few hours. *Lipondolo*: the Tao name of beetles belonging to the genus *Mylabris*, found in large numbers in June and July in the native gardens where they do much 196 damage to the bean crops. The name is, I think, more especially applied to a species with 278 yellow bands, those with red markings being said to be harmless. These beetles are prepared for poisoning food by frying and then grinding into a powder. In this form, they are administered with intent to murder or they may be taken for medical purposes, five or six beetles being used. These beetles contain cantharidin in a greater proportion than cantharis itself. The symptoms described by the natives as occurring after ingestion are constipation followed by high fever, and death eight hours later. This same beetle is known to other tribes and is the *ansuma* of the *Anyanja*.

The bile of the crocodile, *ngongi* (*mbulu*, Chin.); *ngongi* and *mbulu* also are used, meaning the gall-bladder. Crocodile gall has the reputation of being a powerful poison over nearly the length and breadth of Africa. It is known, I think, to all the tribes in Nyasaland. In this district, they qualify their beliefs by saying that the bile of crocodiles from Lake Chilwa and Chiuta which do not eat men is not poisonous. The poison is also said not to be used on the Lower Shiré River where, and where only, crocodiles are eaten as food by the natives. Among the Tao, the gall-bladder is removed with the contained gall, dried, and then ground in a little mortar or on a stone. The dose of the powder is said to be so much as would cover a sixpence. Symptoms are said to be great pain in the stomach, swelling and discoloration of the tongue, and loss of speech. Public destruction of [19] the gall-bladder of any crocodile which has been killed is said to be the custom on the West Coast of Africa, and the same is true of some tribes in Nyasaland as at Karonga, but so far as I am aware, this is not done among the Tao.

The gall of other animals is similarly used, but among the Tao I am not quite certain of the species. *Lipiri*, the puff-adder, certainly is utilized, and I think other snakes, such as *Nakalulu*, a grey, ash coloured snake, *Lingi*, a water-snake six feet long, and *Sanga*, the morning snake. Certain lizards are also employed, such as *Likondwanda*, and *Sanga*, both Chinde and the running frog, *Chimwemwe*. Scorpions too have found a place among poisonous preparations, as it is said, and *Shewiza*, the bile of some mammals. Bamboo fibre, animal hair, the bones of fish, and ground glass, I have also heard mentioned as being administered with the desire to produce a fatal scourge.

Papal seeds made of twigs and the contained pups (species of the family of *Pygoleiidae*) called *chimwangu* or *chimwe ngwi* (from *ku-mwa*, "to eat" and *ngwi*, "fire-wood") are said when eaten by cattle to cause death. I cannot vouch for the truth of this nor can I say whether they are ever given to men.

[37] A wild yam, *mbwe* (*mulapa*, Chin.) is poisonous if not well boiled and the water thrown 278 away, but is not used as a poison so far as I know. The name is true of *ngongi*, a kind of cassava.

Strychnine is specially reserved for poisoning arrows and it is doubtful if it is ever given by mouth; *Kwale* is the name used in this country, but there are two species of strychnine in Swaziland, *Strychnine henbe* and *Strychnine mavomvi*. The seeds and bark are used and, less commonly, the root. They are mixed with the roots of a shrub called *Ndwalabla*, pounded together and boiled, and the liquid used to anoint the arrows. The use of poisoned arrows is a Mozwayo custom adopted to some extent by the Tsa.

A number of poisons are also employed in catching fish, *Nyanga* and *Mwale* being the most common, also *Kwanlabla Ngwale* (Wanke, Chin.), and *Chingunga*.

Witchcraft. In my article on the Amaswazi[2] reference is made to witchcraft and sight. Beside the Nyanga sight or the Tsa sweat, all tribes so far as I know in Swaziland have firmly fixed among their beliefs, the conception of the supernatural human-fish eater. It is a little difficult to define the term sight or sweat, as it has come to have the somewhat generalised sense of one who practises witchcraft, but the original meaning is defined by Smith,[3] a person who has acquired the knowledge of secret medicine by which he can kill his fellow man; " what makes the power so dreaded is not that the sight exercises this power by means of spite but (as is supposed), to eat the body of his victim." It is at once interesting to note that the word sight does not belong, according to Smith, to the personal class of nouns but to the gu-ar class, which seems to imply that they believe a sight to be something outside the idea of a person. Among the Amaswazi in Swaziland district, however, the word belongs to the first class of nouns (the personal class) as also does sweat in Chipwa.

The natives believe that any man in a village may be a sight or it might be more correct to say, is capable of changing into a sight. (Sit is the state of being a sight). In Chipwa, sweat.

As I have pointed out under Disease, practically all illness and death are thought to be due to the machinations of some person or persons. The leading motive which may cause a man to compass the death of another may be spite, revenge, etc., or the desire of sweat. Until recent years, when the Government legislated to put down witchcraft, the charge of sweat was every-day occurrence. Whether or not the prevalence of the idea of witchcraft has any relations to correspondingly frequent practice has never been and now probably never will be easily proved. Dr. Macdonald believes it to be so.[4] It is true that native graves have been and are still robed and that the graves of some Europeans have been so opened in the past, as I have learned from eyewitnesses. It seems probable that the graves were tampered with by natives with the object of removing the human remains, possibly to be eaten or to obtain portions of the body to sweat-doctor. Mr. L. T. Muggridge,

[1] "Notes on some tribes of British Central Africa," loc. cit., p. [illegible]
[2] Op. cit., p. [illegible]
[3] Smith, op. cit., vol. [illegible], p. [illegible]

Resident Magistrate at Shinyanga, told me of a case where the grave of a well-known Sukuma hunter was opened and his trigger finger removed, the reason being obvious. The same thing is said to have occurred in regard to the heart of a brave man. In the former case the finger was probably worn as a charm; in the latter, the heart partly eaten and partly made into medicine. I have heard human fingers and skulls among the stalls of witch-doctors. Such practices were alien to those of cannibalistic societies found in other parts of Africa.

The natives insist that cannot are headed together in some sort of society. There are numerous discrepancies in the evidence brought forward about cannot, but each would presumably arise and they do not, therefore, disprove the general belief in the reality of cannot. So that as it may, it seems probable that though there may be little or no cannibalism at the present day, the beliefs about cannot have arisen in consequence of common cannibalistic practices in the past. There are individual cases of cannibalism well known and one has only to call to mind that of Kasendabala of Mahenye's village. This man more or less openly killed and ate a number of people. On one occasion after a fight, he was seen looking over the dead bodies of the men he had killed and in answer to an enquiry, he denied that he wanted any spoils but said he was just smelling the bodies, "that would be his share." Later on, his own son, who tells the story, brought an Angoni man into the village who wished to settle under Mahenye. It was evening, so he was introduced into his father's (Kasendabala's) house where Kasendabala gave him food and later a mat on which to sleep, the son meanwhile having gone to a beer drinking. In the morning, he returned to take his Angoni friend to the chief, but his father said he had gone away. Entering the hut, however, the son came upon the Angoni's small box, and said to his father, "The Angoni would go away and leave his small box." But the father said, "Well, he has gone." The lad being suspicious again went into the hut and found the place where the Angoni had been sleeping stained with blood. Going out again, he noticed blood dripping through the bottom of Kasendabala's grain-store and looking inside, he found the body.

This man Kasendabala was a great friend of the original Mahenye's headside, Kangi-nsile; after the death of Mahenye and after his sons had passed to the present Mahenye, disagreements arose in the village which cost employer on Kasendabala and the women. One of two brothers was ill and, it appeared afterwards, that the women had said to Kasendabala, "What's you fetish kills off?" It is supposed that Kasendabala thought she meant the brother who was not sick; for it so happened that both died the same night. It was supposed they were killed in order that Kasendabala and the women, his friend, might eat them. Mahenye had the women turned out of the village. She now lives near Sumbu and has seven sons under my care. The man, who was also turned out, took up his abode near a highway where he is reported to have killed several Angoni porters whom he said he plundered, because "being travellers far away from their homes, no one would bother about them."

The father of one of my informants helped to draw out the remains of a body from his grain drum on one occasion and shortly afterwards, it is supposed that his own sons who had said they could not allow it to go on any longer, employed some one to kill him, as he was found, one day, with his head smashed in. There are, I believe, a number of similar cases known.

A person is supposed to gain the powers of sonei by procuring medicine from some one willing to sell his secrets at a price, and by performing certain rites usually connected with the method of hatching. It is said that " such and such a one takes his bath on the top of an anti hill" or "on the roof of his house by moonlight." The sonei initiation here sonei is a long business, the individual being successively initiated into all the various practices of witchcraft. Medicines are made from a skill-horn child, from various plants, from the hyenas, etc., and used for preparing the individual to the new witchcraft. He is initiated to the hyenas, the fox, etc. It is also asserted that a man may acquire supernatural powers by having sexual intercourse with a near relative, a sister or mother. Some had pointed out to me an old man who is said to have utilized this to acquire power but the woman refused and he has been a laughing-stock ever since.

On one occasion, a man related to me the pathetic life story of his attempt to find his favorite sister who, she herself, had been taken away to the coast as a slave. In desperation he has adopted the above procedure to try to gain supernatural powers to help him but without result. It would therefore seem to be a method not particularly associated with sonei.

The sonei is supposed to bring about the death of his victim not by administering poison or other such direct means, but by the more subtle mode of making medicine " against " him. When the victim has succumbed and is in the coffin buried, the sonei arrives at the grave to ensure that the victim he has been working. To the middle-aged the power of making himself invisible, and of taking the form of an animal, owing to the medicine-working habits of the hyenas, this animal form is most commonly taken. Other animal forms which are associated with the sonei are the leopard, the fox, and the owl, all night-going animals. The Tiv say, " The cry of the fox (pahal) is heard at night he seems to associate with sonei doings."

Arrived at the grave after sunset, the sonei blows his horn, the horn of a small antelope, to call his familiars; a fire with a blue flame is made by the grave and around it they dance, as the grave may be illuminated by blue flame without a visible fire. The sonei calls upon the deceased to rise from the grave, addressing him by the name he bore before he was initiated, i.e. his child name. Obeying the summons, the dead man rises to the surface of the ground, though here he seems not to not quite clear — " the hole may be over so small." The dead is then killed again by magic medicine and his body divided to be eaten by the congregation of sonei. It is said that the skull is made into a gourd, the eyes are used as beads, and the ribs formed into a girdle.

A *mwavi* may be met with under different circumstances. An educated native told me of his experience one night when riding a bicycle back to a township where he was employed. Coming along a smooth-level path with his lamp alight, he became aware of the presence of something in the bush in front and at the side of him. Suddenly his lamp was smashed and he was left in darkness, while something pushed him over so hard that he fell off his cycle. Picking himself up, he started to wheel his cycle on, when there appeared on the path in front, figures who, rubbing their hands together to produce a phosphorescent glow, held them up in front of the boy's face. He was, however, not molested further, and coming to a group of huts he knew, he went in and made inquiries as to the cause of his unpleasant experience and was promptly told that there was a man living in a hut near the spot on the path where they had concerned who was supposed to be *mwavi*. Such a story is given for what it is worth. The boy was about twenty-two years old, a highly educated native with an intelligent appreciation of the worth of superstition.

Some *mwavi* demonstrations are here no object but to strike terror and keep up the prestige of the *mwavi* class. Mr. Muggridge tells me, "A boy of mine was certainly attacked and squeezed about the neck by a man whom he described as naked, huge, and slightly hunchback, on the road at the back of my house in Blantyre. The boy was strolling up and down in the dark and had nothing about him to provoke robbery; he was almost choked before he managed to hit out a poll which determined his assailant to let him go. He was not a 'bad' boy and no theory of personal spite was supportable. I thought and still think that the motive was to show that even the Resident's servant twenty yards from the Resident's house was not safe from *mwavi*." It seems possible that some natives with intent to rob had pretended to be *mwavi* but recognizing that their victim was likely to cause trouble, they went no further.

It is said that the phosphorescence is produced by rubbing in the hands two vegetable substances from local trees and that this is the method the *mwavi* adopt to announce their presence.

Poison Ordeal. As I have said above, when anyone sickens or dies, the illness or death is likely to be considered the work of some one who is *mwavi*, and action will be taken by the relatives to find him out. The proceedings in such a case where witchcraft is suspected will now be briefly sketched; though I give an account of a case from beginning to end as if it occurred at the present time, it must be understood that the giving of *mwavi*, the ordeal poison, is now much less common than formerly. A man becomes ill in some village and does not get better, so the matter of his is considered. The sick man's relatives or friends go to the *ba-mtanga* and approach the subject indirectly by asking him his advice about a number of imaginary cases; they may say, "Things have been stolen from our house." The *ba-mtanga* and the matter replies, "No, you have not come to me on about that." This may go on for hours before the facts of the case proper are mentioned to him. Finally, they tell him that one of their relatives is ill in the village, the *ba-mtanga* consulted and advice is given

D-5 (ca. 1912) 1922 FTT Tue FTT

as to procuring medicine for him from a medicine man. If the master of lots is suspicious that some one has caused the illness, he will at the same time ask, "Let us not so pray," mentioning the name of the man whom he suspects. Following the advice given, the medicine man is consulted. He promises to get medicine for the sick man and goes into the forest to search for it. Having returned, he prepares his decoctions and having first partaken of a little himself, he gives it to his patient with further instructions. The friends of the sick man having returned to the village, indirectly ask the man on whom suspicion has been cast to pray for the sick man saying, "He is covered by some spirit." The man prays, sometimes being whipped and beginning *shouts! shouts!* "*pleasé! pleasé!*" and goes on to ask *Mlungu* to take away the spirit which has covered the sick man, adding that he himself is innocent of any ill doing against the man and that any grudge he may have had against him is now forgotten.

If the sick man recovers, well and good, but should he die, there is more to be done. The morning following the burial, the relatives go to the *chief* and in answer to his inquiry of what they are going to do, they say they must again consult the master-of-lots. They will choose some one who lives a long way off and is not cognizant of the death of their relative. Those who go to him have not been shaved after the funeral. Much the same business is gone through as on the first occasion but, in the end, the master-of-lots is told that they suspect some one unknown to have brought about the death of their relative. The names of all the possible persons are given; the lots cast in each case and, eventually, one is picked out as the guilty man; the master-of-lots saying, "If I am not telling the truth, you can test my words by giving most (ordeal poison) to a fowl; if it does not die, come back and break up all my properties."

He may have gained information from his lots that the suspect is a man of power gained by some special rite, e.g. the midnight bath on the sun hill, in which case he will insist that the fowl poison-ordeal must take place on an ant hill or he will give other specific instructions. On the way back, the relatives will buy two fowls; most will be prepared by a boy who has not passed through his initiation ceremonies, and two of the party will be chosen as pleaders, one for the demand, the other for the accused. One fowl is then selected to represent the accused and the poison administered according to the conditions laid down by the lot-diviner, while the two pleaders give injections to it, one saying, "You are guilty; you shall die"; the other, "You are innocent and you shall show your innocence by vomiting the poison and recovering." If the fowl dies, a third man cuts off its head, saying, "I am the butcher of the dead." *Mwai* is then administered to the second fowl to ascertain whether any other persons are involved. The head of the first fowl is singed, stuck on a stick and carried back with the party towards their village. A little way outside, they halt in the bush, and send word to the headman that they are returning. He then comes out privately to see them, asking what has happened, and is told all the events in sequence.

1-Shannon D-6 (Jan. 1912) 1922 PTT Tue PTT

754
695

One of the group is chosen to go in the morning and someone else is to appear on behalf of the accused man. He and the headman join the party in the hut where the whole of the case from the beginning of the deceased's illness, is again related, ending with the last test and domestic statement of the cause of the accused, whereupon the lord's head on its stick is planted in the ground opposite to the man who has appeared for him as he sports listening to the story. The man who has been called to defend the accused, though the latter may have no particular claim on his kindness, is in honor bound to do his best. As the lord's head is planted opposite him, he will shift quickly to one side, protesting the innocence of the accused. All then adjourn to the village to put the case before the chief. One of the men acts as prosecutor, again going through the whole case, calling witnesses and others to aid him in speaking. The accused is then defended by the man chosen for the purpose, assisted by others whom he asks to help him. They may speak for a week or more. The chief decides the case, and the result will be communicated to the defendant by his pleader.

If he is found guilty of causing the death of the deceased, he must pay the fine inflicted or if he has been accused actually of cause, he may have to undergo, or may offer to undergo, the most ordeal poison himself or the test may be made with a dog tied to the leg of the accused man. If the ordeal is satisfactory to the defendant, the case claims compensation for wrongful accusation. If he dies with cause, his relatives have to pay compensation for the crime he is thereby shown to have committed.

[p. 92] If either party is dissatisfied with the chief's decision, recourse [illegible] had to a hearing before another chief, the first being very glad to be rid of the case. The second gives judgment quickly. If the case goes on to a poison ordeal, a day is fixed and the accused is taken out to some spot two or three miles from the village where a hut is built called *ndaso* (place of torture). Accompanied by the two pleaders, he remains here for several days. People from the village come out and attempts are made to make him confess any accomplices; beans are fried over a fire and when very hot are put into the accused's hands and his fists closed over them, or they are put in a cloth which is fastened round the forearm, or bamboo sticks are arranged one on either side of the head and tightened by a string.

The third day, natural undyed bark-cloth is obtained and men go out to fetch the most poison, two men from each party, the prosecutor and the defendants. One man sent by the prosecutor has actually to take the bark from the tree, while the others look on to see fair play. The bark can only be taken from the east or west side of a tree; it may not be cut with a knife or axe or be pulled off, but must be cut with a stone and allowed to fall; only a piece which falls with the inner surface lying upwards is taken. Any of the party may carry it but they must on no account have one another. Having returned, they hide the meal.

On the appointed day, the big drum is pounded and a crier goes round saying that everyone who wants to see or call on *Allah* must go to the appointed place. Every large

D-Swanson D-5 OH. 0510 1952 FTT Tue FTT

village had its regular place of torture and usual detailing, two or three miles from the village. Those used by Mokenya, the old Zandze chief, may still be seen.

A clear way to make two feet level and fourteen feet long in the bush and have the accused taken up his position situated on either side by the two pleaders, the detailing pleader on the right, the prosecuting on the left. Facing east or west or following the directions originally given by the center-of-tree, that is, taking up the position in which the accused is supposed to take a midnight bath, or practice some rite under a tree or an ant hill, etc., he is given a decoction of wood to drink from a gourd. This decoction is made on the spot, the bark being pounded up on a stone by one of the prosecutors. The accused must have had no food that day. He then starts to walk up and down the short cleared path with the two men, one on either side of him, the one saying, "Now you have drunk wood, you shall die as you deserve; you did in the mid-day," the other denying the accusations, saying, "He shall vomit the poison." He is watched by the committed sword who note the various symptoms of which vomiting is the first and said to be the most characteristic. After this has gone on for some time, they search for what is called the sponge which is said to be "a ball of bile formed in the mouth and expelled by vomiting so that it bounds on reaching the ground but not before", followed often by a second ball, twenty minutes later. Should this be expelled, recovery may be expected, foreshadowed by clearing of the vision. If he recovers, he is indeed a wonderful man and is hailed on all sides. The women (all with their tongues and dress) and he is carried back in triumph; the detailing pleader will stagger about and demand anything he wants for his share.

A fatal termination is characterized by little and non-forcible vomiting. Purging is common but said to be painless. Vision is affected and as time goes on, the spectators ask what he can see, "Do you see that over there?" indicating a hill. If he replies situation, then they say, "Ah, he is going to die!"

The poison may not take full effect for three or four hours. The end is ushered in by a last stage when the legs become weak; he staggers, then unable to stand any longer, falls to the ground dead, encircled by the relatives who rush in and lift stones upon the body, crushing it. The relatives take the mangled corpse and lay it on logs covered with grass in the bush. No other burying is permitted. It may be placed in a tree by people acting as mole. Burial is forbidden.

In some cases accused need to be burned, not being given the chance of the poison trial. This took place at a recognized spot like others. The last man to be burned by Mokenya was Mtshiki in 1900. Burning was also a punishment in some bad cases of murder. Such was the case of Chingale. The man was put in a thorn-stick, a pile of logs was built round him and then set on fire.

Witch-finder. In addition to ordinary poison, another method of discovering a wizard is by "smelling sick." If a number of people have died in a certain village, the inhabitants may begin to think that there is a wizard among them, and procure the services of a witch-finder.

D-Discover D-S (on. (912) 1933 PTT Tue PTT

754
G85
781

Afisatile is a Chinyanja word from *ba-fisa*, "to hide," referring to the custom of hiding in the village; the practice is originally Mang'anda, done adopted by the Tao. *Afisatile* is often a woman and may be young. She comes to stay in the village unknown to the people, lives in a remote house in the gardens and is said to go about at night when she is able to summon absent persons from their homes. The fee for her services is paid beforehand. Later, the villagers are assembled and going round the company holding out from in her hand, she calls upon Ko-and-Ko or the guilty man saying, "This is his" *ngalo-mane*." The villagers all answer, "There is no one of that name in the village." She then goes round again and throwing the fear over the accused, covers his ordinary name and runs off into the bush, not to appear again. The accused may then offer to take meat (called *pinsa*) to prove his innocence or if it is a case of illness only and not death, he may be treated by a medicine man, the process being called *ku-lapidile*, "to take evil things out of."

A recent case in Mwanbwe said to concerning his old practices and may then be received into the company of *mfisatile*. A famous *mfisatile* near Zomba affirms that he used to be recent. The mode of action of *mfisatile* varies greatly with different men; for some the necessary is quite a minor matter; in other cases, it is an important affair.

Witch-destroyer. Where death is suspected to have resulted from *wanzi*, steps may be taken immediately to catch and kill the *wanzi*. For this purpose, the help of the *mundu panchinda* is sought. *Ku-mfisatile wanzi* "to break *ch'ku* out of a stick"; it appears to be both a Chinyanja and a Chiyao word. The *wanzi* refers to the practice of the professional witch-killer who is supposed to run a stick through the nose up the bowel of the victim and then break it off, leaving part inside. The *panchinda* having been informed of the approaching funeral hides in the bush near the graveyard and watches the funeral. After everyone has gone, he is free to put in operation that for which he has been called. The following modus operandi is related of a celebrated *mundu panchinda* called *Ungwali* of Zomba. The water in which the corpse had been bathed was strained and put in an earthenware dish. He also provided himself with a gourd containing medicine and some stones, and another gourd filled with palm nuts from crocodile gall to anoint the mfisatile sticks. He also had a small antelope's horn containing medicine which when sounded on the head rendered him invisible, together with the stalks of a species of millet called *nkalam* which made he garden at a touch, and a stick made from the horn of a small antelope, the *ntiki*.

So provided, he proceeded to the grave, around which he dug a ring with medicine contained in still another horn. Within this circle, all was safe. This was followed by a square immediately around the grave with a stone from the grave placed at each side, north, south, east and west. The plate of water was placed on top of the grave. The *mundu panchinda* then endowed himself with the medicine which made him invisible to the *wanzi*

and sliding within the stick, he blew his whistle which was audible to the sound man who was then induced to come out of his house. When he had reached the grave, the water was sprinkled over him by the jumbombi with the millet stalk from the dish on the grave, or he was struck with the goat's tail. In either case, he fell to the ground senseless. He was then ready to be dealt with. The whistle stick, small bamboo filled with scientific poison, was pushed up the nose and broken off to liberate the poison. Sticks might also be inserted behind the ear or in various other spots. The sound was then beaten to wake him up; he was off to his own village and then, a little later, he sickened and died, telling on the man. After death, the male elder preparing the corpse of the hitherto unsuspected sound, might find the end of the stick projecting from the nose or see the puncture elsewhere with the medicine adhering to it, and the man was revealed in his true colors.

At Mwinkie's village, there was a man called Lisuge who professed to be able to extract the poison injected by the jumbombi by causing his patients to undergo a vapor bath and to drink certain decoctions. This man would never reveal the name of anyone who came to him for treatment but would long that " Ooda was brink." The symptoms of the mortal malady caused by the whistle are said to be internal obstruction with tremendous distention of the abdomen (peritonitis).

Of this same village, a story is told which, if not true, at all events illustrates the sort of thing that is believed. As has been mentioned above, whenever the jumbombi blows his little horn, any woman will hear it and thinking it is one of their head calling, will go to meet him. A woman of this village told how she and her husband were sitting over the fire while the evening meal was cooking, when he suddenly jumped up and said he must go outside for a bit. She remonstrated and asked him to wait for his food, but he hurried off. Later he returned, complaining of feeling very ill; his belly swelled up and he died soon after. It was said that this man was very friendly with a woman named Aldki and that when he went out into the bush, he was heard calling in a low voice, "Is that you, Aldki?" When his body was examined, two punctures were found on the left side of the chest. It was supposed that it was Aldki he expected to meet and with her enjoy a constitutional repast, whereas it was a jumbombi who had cried and killed him.

This brief outline of a case of sickness, suspicion of witchcraft, death, and the searching for the author of it, the witch-finder, ordeal poison, death, and the catching of the unofficial witch, has been given as a more or less connective story in order that it may be more easily understood. Some further details concerning the lot-casting, witchcraft, etc., must be added.

Lot-casting. Medicine men who cast lots were at one time fairly plentiful and were consulted on many occasions, often of small importance from a European point of view. Chief of all were questions of witchcraft. The casting varied in different cases. In court and other important matters, the medicine was always used the dikenge (drinking in-

787 [illegible]. These were of various types but the most usual was made of a gourd, *ikhondo*, called *ukondo*,[1] containing a number of small articles, each of which had some special name and if is apparent in the casting, a special significance. Among these articles are:

(a) *Ankhokhoko*; small pieces of broken white earthen-ware. These have the significance of whiteness, cleanness, innocence, or answers in the negative to questions as to any particular person having done some action.

(b) *Chimvumpajo*; the body of one of those beetles which bring death. This indicates death in answer to the question asked. *Chimvumpajo* is the name of the beetle.

(c) *Upwe*; a small piece of a sleeping-mat, signifying illness.

(d) *Lisuki*; a small piece of stick or grass.

(e) *Ca Mwando* the plural; little pieces of stick, said to indicate that the people have previously consulted some other diviner, whose findings are called for by the man who is then casting lots.

(f) *Mwapo*; the horn. For convenience the small horn of a goat is used. It indicates witchcraft, referring to the fact that witches like medicine men are supposed to keep their medicines in horns.

(g) *Kpidzio*; the coiled tendril of a vine, indicating a dispute, etc.

The lots are cast, and according to the disposition of the various articles, an interpretation is given in answer to the question put to the instrument.

Chipondo (plur. *ipondo*) is the word used in referring to instruments used for divination in minor cases and several of these are usually included in a diviner's kit. They may be called *chimapo*.

1. A small bag of fawn or zebra is mixed and any article, such as a knife or a piece of stick is flipped towards it; interpretation is based on the direction taken by the article flipped.

2. A small tortoise shell filled with medicine propelled by a feather stuck in one end is similarly used, and is called *chimapo cha ngwapa*.[2]

3. A horn and feather may be used in the same way.

4. The stuffed skin of a weasel, *ulimbwili* (*Mwapo*, Chin.) is also used, in the same way as gelapelo, the squirrel.[3]

On February 4, 1914 at Kondo I witnessed Chimpanjiro of Chapola village, a Mangonde man, use a small outfit for divining, consisting of: (1) A small solid horn in a gourd with pieces of stick (Pl. XVI, figs. 2, 3); (2) a piece of bamboo matting with a horn fixed on each end of the strip called *chimapo cha ngwapa* (Pl. XVI, fig. 1); (3) medicine in a gourd (Pl. XVI, fig. 1); (4) a mirror (Pl. XVI, fig. 4). He commenced by taking these things out of his bag and dusting them by rubbing in his hands. The gourd cup was cleaned out with his finger and spit into. The horn was spit upon, rubbed in the hands, and anointed with

[1] Stearns, "Notes on some customs of British Central Africa" (P. XXVII, fig. 4).
[2] Ibid. (P. XXVI, fig. 2). [3] Ibid., p. 400 and (P. XXVI, fig. 3).

3:Swanson D-5 (on. 1912) 1922 F77 Tan F77

medicine from the gourd by means of a stick; then placed at the forehead, point forwards, held for a second at each armpit, and finally rubbed over in the hands again. The leaf was distinctly moistened, especially the edge, and rubbed in the hands, as were the horns on the she-spoon. All this was done with great precision and evidently in definite order, each article being held on the ground in turn, and the string of matting rolled up. Four pieces of reed of a size that would lie over the mouth of the gourd cup overlapping the edges about an inch were then selected from among others and set ready on the ground. The cattle were treated with medicine from the same gourd. The horn was placed in the gourd by the operator, point upwards and lying towards himself, so as hold the gourd by its body in the palm of his left hand, the handle towards him. Holding the cattle in the right hand, he constantly continued to the chimpe " to tell him truly," " to answer his questions," and so on. By slight movements of his left arm which were well disguised but quite easily perceptible to the watcher, he could make the horn assume the erect position in the gourd and then fall backwards or forwards or to either side. The first position indicates " all is well," " nothing need be done"; the second means "there is trouble," "some one is talking on the village," " there is a case to be settled." These answer questions put to it by the owner who is being consulted about some case of illness, etc.

Another method of divining is with the horn in position as before mentioned and the four pieces of stick placed across the mouth of the gourd touching one another, the ends projecting at the sides. The operator is able to make the horn appear to lean off all the sticks without moving the gourd, or he can make any number of the sticks tumble into the gourd, and repeat the performance. If they fall off, it means a good day to go on a journey; if they fall in, the journey should be postponed.

The chimpe she spoon is held similarly in the left hand by the middle so that two wings are formed, each with the weight of a horn at the end. The motor-driver is able by almost imperceptible movements to make the two wings open and fall away from each other or swing together, and together partly roll up. When they fall apart wide open, it is an indication that all will be well; when they close, death may be expected. The gourd and horn and this chimpe she spoon form a pair which are called female and male.

Chiyanda she mbingo: mbingo is a word relating to omens in regard to journeys. Thom Chimpe told me that he remembers as a boy, when his father was going on a journey, he would take some pieces of root, mention them in his mouth, and stick them on the wall of the hut. These pieces of root were duly vomited by Thom's mother, as manifest they gradually took up a position lower and lower on the wall until they reached the ground. Then she knew that her husband had safely reached his destination.

Gwasa may be told in yet another way, chimpe she kwambula (to vomit, to speak). Ichimbe is put in an empty house and the medicine man and his chimpe all outside. The medicine man is asked some question which he puts to the mimbe which then answers like an oracle. I have never seen this done but my native informants tell me the voice that

speaks is invariably used in discussion and Chinyanja is the language always used. It is doubtfulness a case of what we should call constitutionalism. The system is evidently of Mang'anja origin but is great favor with the Tao.

Divination also plays an important part in tracing thieves or stolen property or in picking out from a number of people anyone guilty of some crime. Several modes of procedure may be adopted. The chimanga called ushoko may be used as the chimanga also chipata (chipata, a kind of basket). Medicine in the form of certain roots is placed on the ground and covered by the inverted basket on which is placed the ushoko. Each person in turn is supposed to lift the basket and the guilty one is at once revealed by his inability to lodge the basket off the ground. This method may even be used to reveal a case guilty of sorcery.

Other methods of divination include a kind of trial by ordeal somewhat similar to a boiling water ordeal. *Kumbala* (from *ku-mbala*, to bump round, referring to the perpendicular mode in search of what is lost, or *nambala*, the Chinyanja word from *ku-tsala*, to follow on the footsteps of) is the name of the witch-doctor who searches for stolen property or traces the thief. The same man may be called *mahumbala* in Chinyanja (from *ku-mbala*, to reveal) when he uses his instrument to detect in a crowd the person guilty of some crime. The *kumbala* uses the horn of a bushbuck stuffed with appropriate medicine, the actual mixture or other and methods adopted varying somewhat with different practitioners. The practice I believe to be a Mang'anja one and I think most of the operators were Anyanja men and not Tao, though the Tao, as with other customs, adopted the system fully. In my district, the *kumbala* was usually armed with a rattle; when the horn indicated the guilty individual, he intimated the fact to the assembled crowd by throwing flour over him.

When a search is to be made for stolen property, the horn is put into the hands of four men, alternate men pressing down and pulling up on the long horn, while the medicine man stands by, operating his rattle and exhorting the horn to do its work of revelation. I know a man who has on several occasions assisted in holding the horn; he said it simply seemed to drag him on in a series of jerky movements, sometimes going very fast, at other times moving slowly, dragging the holders " along the footsteps of the thief with the stolen goods " in and out of the house, through the bush, and across streams, until suddenly the horn dropped from their hands to the ground, where on digging, the stolen goods were found buried. (Cf. table turning, planchette, etc.)

A good description of *kumbala* under the heading *mahumbala* and *nambala* is given by Cadenhat,[1] who describes the Mang'anja operations. In this same article, he makes the mistake of describing an *mahumbala*, the *kumbala*. As I have stated above, the *kumbala* is an order of medicine men who keep the man who is an expert while it is the second man, but the *mahumbala* points him out while he appears as an ordinary man of the village.

[1] R. W. Cadenhat, "Native customs in Nyasa" (Blue, London, 1922), vol. 11, p. [illegible].

Witch-medicine. The making of medicine against people has been shown to occupy an essential place in witchcraft, and it plays an important part in all conditions. In by-homicide 754
graves, the ordinary use of drugs in numerous diseases is resulted, though it is probable that 755
very much greater faith is placed in a packet of herbal roots put under the floor of the house than in the efficacy of any concoction taken by mouth.

There is a general belief that by medicine some ability creeping into supernatural power 756
can be acquired. This power in a general sense is represented by the word *ulema* and a man 757
or possessed is spoken of as *ulemada jan kenada*. The desire for increased power may be a 758
perfectly natural one, such as a desire for influence and popularity on a chief, or on the other hand, the power of sound may be aimed at, or again, the knowledge of magic medicine for thieving or for any other practice. Choice is, therefore, a relative matter. The necessary medicine or initiation into the understanding of magic can be purchased from persons already practitioners, the lowest initiation creeping by imperceptible degrees into the most criminal 'witch-doctor.' A single practitioner may prescribe a charmed drinking for an ulcer, exercise an evil spirit by a vapor bath, sell medicine to enable the buyer to win a case at court, arrange medicine on a pathway to act as a selective love potion, or prescribe a drug to change a man into a lion.

Deserving of special mention are the people who thieve by the aid of medicine which 761
they have either purchased or prepared themselves. Such a man is called *ulindu* and the 762
medicine *ulindu* are *ulindu*. The active principle of this medicine is said to be prepared from the tail of a lyrenna, an animal which is said to be able to enter a house where people are sleeping and kill and carry off the lords without waking the occupants. The medicine is often carried in a lyrenna's tail. The *ulindu* is supposed to approach the house he would rob and charring some medicine in the mouth, gently blow towards it to put everyone to sleep. The door is supposed to unfasten itself and the thief is free to take what he wishes. He is even said to kill, cook, and eat food in the house while the inmates remain unconscious. A special characteristic of the *ulindu* is that whenever he lays his hands on in the house he must remove, though he does not want it, so that in the morning many valuables, valuable objects may be found outside the hut.

There are many other magic medicines. One of them, *kempu*, if introduced into a village, will cause the illness and death of some inmate. Anyone handling the body of the 759
sick man or the corpse after death, sickens and dies until the whole village is wiped out. There is a man serving a life sentence now at the Central Prison, Kandy, who was convicted of having caused the death of many people in a village in Anuradhapura. He is said absolutely to have administered the power of his medicine.

Medicine made from a corpse is supposed to be effective in various ways. The blood 763
of a corpse is bottled into the ear for deafness. Drinking the water which has been used 764
by a corpse to wash his face relieves hemicranial ache. Medicine is made from the hair of the beard of a corpse or from an ulcer and used for chest trouble.

[illegible] *Myani* is a love potion. Men are often anxious that women should ask them for love (*ka-pula*). A man seeing a woman whom he fancies, takes up some of the dust where she has trodden and mixing this with medicine puts it in his hair. If he meet her again, though he takes no notice of her, she will come to him.

[illegible] When crops are harvested, a layer of the seed is laid at the bottom of the storehouse, and seeds, which consists of medicines contained in the skull of or made from the body of a still-born infant, is then put in and the store filled. In this way, he who has only a small garden may be sure that his grain will last a long time. Similar medicine is put in gardens with the first value to insure heavy crops. A man on the approach of the planting season should never give away seed to anyone until his own seed is put in or it may bring bad luck to his crop. This is evidently a superstition arising from the fact that if he gives seed away, he may not have enough left to raise a crop sufficient to support his family. Some people are considered "lucky at planting pumpkins, other people when they plant, may only recover pumpkins." A man, therefore, will often ask one of the lucky people to plant his pumpkins for him. My hospital boy always got the cook to plant his pumpkins.

[illegible] A man wishing to become a person of importance, with a village of his own, takes a medicine made from a certain tree and then builds his hut in a new place, hoping people will flock to him. The tree is known as *shakanishi*. Another medicine, taken in the belief that people will flock to a man in consequence, is made from the bark called *mtoki*. Cf. *Mtoki* planted at the threshold to attract visitors.

Conjuring. There are other performances akin to magic in the eyes of the natives, which I have never had the opportunity of witnessing but which would appear to be of the nature of juggling or possibly hypnotism; some resemble the tricks of jugglers, others are more like some of the performances in India. I certainly supposed that they had been learned from men at the coast (*Swahilis*), but I am assured that they belong to the Yao themselves.

[illegible] Kambanje, a Yao of Chimalemba, well-known at dances and Chipapa, after some preliminary dancing, stands still and is covered by a cloth; when the cloth is again removed, he is discovered with a number of squealing puppies held in his bare cloth, which he then hands round. He begins to dance again and the persons to whom the puppies have been given watch him and then find they are holding enormous, wet puppies. Or seed-fish are handed round and the people find they are holding women's diapers.

Another trick often performed by Kambanje was the burial of a man in the ground, covered up completely with earth; at the sounding of the drums the buried man comes running in from the bank of the neighbing wood.

Kamanga, a Yao of Mdimwaya's, priest, and medicine man, after an Chipapa ceremony used to put on his red blanket and walk over the hot embers of an enormous fire in the village open space. He admitted that he smeared himself with medicine and an specific man told me that when he put his feet on the hot logs, it caused a sizzling sound.

Tingalinga was another well-known performer; he used to do the same tricks as Kamboja. He also was possessed of an elastic skin and is said to have been able "to tie his own tongue behind the back of his head."

Mpudutsula, a Tao of Mbundu, is a man with considerable resources. He is said to be able to produce a lion or will have a lion's tail and claw. He would offer to show this if there were any brave enough to go through with it. On a moonlight night, he would appear on the ground in a cleared space near a village the tail of a lion held cross-wise in a piece of split bamboo. At the split end of the bamboo, he would place a lion's claw and round this, a woman's fish hold in position by three bamboo pegs, around which he would draw a circle of whitened flour. Everyone would then withdraw to a hut in which the women was to take place. After an hour or so, Mpudutsula would send some one out to inspect the lion's tail where probably all would be found intact. He might then pretend to be uninterested and sleepy and suggest that some one should go out again in half an hour. Sooner or later, a man would come back, having found the tail gone; then everyone would go out to see what had happened. The pegs would be found in place but the tail and claw gone. A little way off, the split piece of bamboo would be found and further still a head or two from the woman's fish. Then, Mpudutsula would pick up, and leaving a little trail of flour on their way, all returned to the hut, while he whistled as if calling some one. Suddenly they would be aroused by the sound as of a lion breaking against the hut walls, as the beasts are known to do, and next, a loud roar. Mpudutsula would immediately open the door half way so that the people could look out into the moonlight and there, a little way off, would be the lion. It would immediately advance towards the house and then, as it prepared to spring for the door, Mpudutsula would offer it some of the flour in his left hand, armed with a stirring stick, entire, in his right hand. As the lion hesitated, he would strike it on the head with the stick and lo and behold! the lion would vanish and the tail and claw would be found in his hand.

Superstitions. Scattered throughout these notes, particularly under Omen and Dream, mention is made of practices which show a strong belief in superstition. Below are given a number of other beliefs, and it is interesting to compare them with many well-known superstitions in other parts of the world.

1. A child who cuts the upper incisor teeth first will be unlucky. Such children used to be killed by the Tao. (Other tribes make medicine against the Omaiumwi (Black.)

2. A woman with polydactylism may not take food out of a cow-stem. Otherwise the stock of cows will not last long. (Rudimentary sixth fingers are not uncommon.)

3. An insect called shipuno used which lives in the mud at the bottom of pools, if killed causes the water to dry up.

4. If a boy puts a cross-spider in the armpit when learning to swim, he will learn quickly.

5. A man wishing to prevent rain falling on a day he is making a journey, will wrap some of the leaves of the cotonwi tree in his hair cloth and go without detaining.

[771] [774] 8. It is believed that signs of guilt are visible in the eye of a murderer; medicine is procured in the hope of getting rid of these signs.

9. The possession of the hair of another person is supposed to give the possessor power over that person, hence a medicine man, when the patient has been treating in vain, shaves the patient and keeps the hair until payment is made.

[772] 10. A native with light greenish-gray eyes is not to be trusted. He is said to have eyes like a cat and is called *mujerijeri*; these eyes are rare among natives.

11. It is unlucky for a child to get into a basket; he may be burned.

12. Should a woman turn the porridge pot upside down, every one who has eaten will become constipated. For the same reason, a woman, after turning out the porridge from the pot, just touches the top of the mass of porridge with the bottom of the pot.

13. A woman will never leave the pounding stick in the grain-mortar. Should she do so, the heavens would fall.

14. When a zebra is killed, a hunt is held in its tail so that eating of the meat shall not cause indigestion.

15. It is unlucky to sit upon a hoehoet, the mantle. The person would surely be bitten by a snake.

[773] 16. If a man commits murder, and his wife is pregnant at the time, she must sleep on the spear used.

17. Children are told that they must not eat at night; that if they are hungry, they must be quiet and try to go to sleep again. If they don't sleep and sit up eating porridge, a long hairy arm will come through the hartmat door and hug for meat, the voice of the monster saying:

[774]

> "Ngau shashal'shasi ssaqa ai ngau!"
> "Give me that which you put in your mouth and throw away."

the repeated movements of the hand to the mouth (*ssaq*) and back to the pot being supposed to make the "hungry" think that they are not really eating but merely swallow and throwing away the food.

18. A male should not scrape the porridge off the porridge stick; this is only allowed to the women. Should a man do so, it is supposed that when he goes hunting, he will let anything he shoots at, only in the tail.

19. There is a saying that the men and boys may eat little pieces of porridge which fall out of the pot, while cooking, on to the supporting stones and it will give them power to scrape cattle from battle. The fragments are called *ngalqaiche*, (from *ka-kqaiche* "to scrape").

20. Children are instructed to take their food sitting down instead of being in a hurry and standing to take it. They are told that if they do not sleep, their porridge will not go into their stomachs but into their legs and swell out their knee-joints.

[77]

[78]

[79]

[80]

[81]

[82]

[83]

[84]

[85]

[86]

[87]

[88]

[89]

[90]

[91]

[92]

[93]

[94]

[95]

[96]

[97]

[98]

[99]

[100]

[101]

[102]

[103]

[104]

[105]

[106]

[107]

[108]

[109]

[110]

[111]

[112]

[113]

[114]

[115]

[116]

[117]

[118]

[119]

[120]

[121]

[122]

[123]

[124]

[125]

[126]

[127]

[128]

[129]

[130]

[131]

[132]

[133]

[134]

[135]

[136]

[137]

[138]

[139]

[140]

[141]

[142]

[143]

[144]

[145]

[146]

[147]

[148]

[149]

[150]

[151]

[152]

[153]

[154]

[155]

[156]

[157]

[158]

[159]

[160]

[161]

[162]

[163]

[164]

[165]

[166]

[167]

[168]

[169]

[170]

[171]

[172]

[173]

[174]

[175]

[176]

[177]

[178]

[179]

[180]

[181]

[182]

[183]

[184]

[185]

[186]

[187]

[188]

[189]

[190]

[191]

[192]

[193]

[194]

[195]

[196]

[197]

[198]

[199]

[200]

[201]

[202]

[203]

[204]

[205]

[206]

[207]

[208]

[209]

[210]

[211]

[212]

[213]

[214]

[215]

[216]

[217]

[218]

[219]

[220]

[221]

[222]

[223]

[224]

[225]

[226]

[227]

[228]

[229]

[230]

[231]

[232]

[233]

[234]

[235]

[236]

[237]

[238]

[239]

[240]

[241]

[242]

[243]

[244]

[245]

[246]

[247]

[248]

[249]

[250]

[251]

[252]

[253]

[254]

[255]

[256]

[257]

[258]

[259]

[260]

[261]

[262]

[263]

[264]

[265]

[266]

[267]

[268]

[269]

[270]

[271]

[272]

[273]

[274]

[275]

[276]

[277]

[278]

[279]

[280]

[281]

[282]

[283]

[284]

[285]

[286]

[287]

[288]

[289]

[290]

[291]

[292]

[293]

[294]

[295]

[296]

[297]

[298]

[299]

[300]

[301]

[302]

[303]

[304]

[305]

[306]

[307]

[308]

[309]

[310]

[311]

[312]

[313]

[314]

[315]

[316]

[317]

[318]

[319]

[320]

[321]

[322]

[323]

[324]

[325]

[326]

[327]

[328]

[329]

[330]

[331]

[332]

[333]

[334]

[335]

[336]

[337]

[338]

[339]

[340]

[341]

[342]

[343]

[344]

[345]

[346]

[347]

[348]

[349]

[350]

[351]

[352]

[353]

[354]

[355]

[356]

[357]

[358]

[359]

[360]

[361]

[362]

[363]

[364]

[365]

[366]

[367]

[368]

[369]

[370]

[371]

[372]

[373]

[374]

[375]

[376]

[377]

[378]

[379]

[380]

[381]

[382]

[383]

[384]

[385]

[386]

[387]

[388]

[389]

[390]

[391]

[392]

[393]

[394]

[395]

[396]

[397]

[398]

[399]

[400]

[401]

[402]

[403]

[404]

[405]

[406]

[407]

[408]

[409]

[410]

[411]

[412]

[413]

[414]

[415]

[416]

[417]

[418]

[419]

[420]

[421]

[422]

[423]

[424]

[425]

[426]

[427]

[428]

[429]

[430]

[431]

[432]

[433]

[434]

[435]

[436]

[437]

[438]

[439]

[440]

[441]

[442]

[443]

[444]

[445]

[446]

[447]

[448]

[449]

[450]

[451]

[452]

[453]

[454]

[455]

[456]

[457]

[458]

[459]

[460]

[461]

[462]

[463]

[464]

[465]

[466]

[467]

[468]

[469]

[470]

[471]

[472]

[473]

[474]

[475]

[476]

[477]

[478]

[479]

[480]

[481]

[482]

[483]

[484]

[485]

[486]

[487]

[488]

[489]

[490]

[491]

[492]

[493]

[494]

[495]

[496]

[497]

[498]

[499]

[500]

[501]

[502]

[503]

[504]

[505]

[506]

[507]

[508]

[509]

[510]

[511]

[512]

[513]

[514]

[515]

[516]

[517]

[518]

[519]

[520]

[521]

[522]

[523]

[524]

[525]

[526]

[527]

[528]

[529]

[530]

[531]

[532]

[533]

[534]

[535]

[536]

[537]

[538]

[539]

[540]

[541]

[542]

[543]

[544]

[545]

[546]

[547]

[548]

[549]

[550]

[551]

[552]

[553]

[554]

[555]

[556]

[557]

[558]

[559]

[560]

[561]

[562]

[563]

[564]

[565]

[566]

[567]

[568]

[569]

[570]

[571]

[572]

[573]

[574]

[575]

[576]

[577]

[578]

[579]

[580]

[581]

[582]

[583]

[584]

[585]

[586]

[587]

[588]

[589]

[590]

[591]

[592]

[593]

[594]

[595]

[596]

[597]

[598]

[599]

[600]

[601]

[602]

[603]

[604]

[605]

[606]

[607]

[608]

[609]

[610]

[611]

[612]

[613]

[614]

[615]

[616]

[617]

[618]

[619]

[620]

[621]

[622]

[623]

[624]

[625]

[626]

[627]

[628]

[629]

[630]

[631]

[632]

[633]

[634]

[635]

[636]

[637]

[638]

[639]

[640]

[641]

[642]

[643]

[644]

[645]

[646]

[647]

[648]

[649]

[650]

[651]

[652]

[653]

[654]

[655]

[656]

[657]

[658]

[659]

[660]

[661]

[662]

[663]

[664]

[665]

[666]

[667]

[668]

[669]

[670]

[671]

[672]

[673]

[674]

[675]

[676]

[677]

[678]

[679]

[680]

[681]

[682]

[683]

[684]

[685]

[686]

[687]

[688]

[689]

[690]

[691]

[692]

[693]

[694]

[695]

[696]

[697]

[698]

[699]

[700]

[701]

[702]

[703]

[704]

[705]

[706]

[707]

[708]

[709]

[710]

[711]

[712]

[713]

[714]

[715]

[716]

[717]

[718]

[719]

[720]

[721]

[722]

[723]

[724]

[725]

[726]

[727]

[728]

[729]

[730]

[731]

[732]

[733]

[734]

[735]

[736]

[737]

[738]

[739]

[740]

[741]

[742]

[743]

[744]

[745]

[746]

[747]

[748]

[749]

[750]

[751]

[752]

[753]

[754]

[755]

[756]

[757]

[758]

[759]

[760]

[761]

[762]

[763]

[764]

[765]

[766]

[767]

[768]

[769]

[770]

[771]

[772]

[773]

[774]

[775]

[776]

[777]

[778]

[779]

[780]

[781]

[782]

[783]

[784]

[785]

[786]

[787]

[788]

[789]

[790]

[791]

[792]

[793]

[794]

[795]

[796]

[797]

[798]

[799]

[800]

[801]

[802]

[803]

[804]

[805]

[806]

[807]

[808]

[809]

[810]

[811]

[812]

[813]

[814]

[815]

[816]

[817]

[818]

[819]

[820]

[821]

[822]

[823]

[824]

[825]

[826]

[827]

[828]

[829]

[830]

[831]

[832]

[833]

[834]

[835]

[836]

[837]

[838]

[839]

[840]

[841]

[842]

[843]

[844]

[845]

[846]

[847]

[848]

[849]

[850]

[851]

[852]

[853]

[854]

[855]

[856]

[857]

[858]

[859]

[860]

[861]

[862]

[863]

[864]

[865]

[866]

[867]

[868]

[869]

[870]

[871]

[872]

[873]

[874]

[875]

[876]

[877]

[878]

[879]

[880]

[881]

[882]

[883]

[884]

[885]

[886]

[887]

[888]

[889]

[890]

[891]

[892]

[893]

[894]

[895]

[896]

[897]

[898]

[899]

[900]

[901]

[902]

[903]

[904]

[905]

[906]

[907]

[908]

[909]

[910]

[911]

[912]

[913]

[914]

[915]

[916]

[917]

[918]

[919]

[920]

[921]

[922]

[923]

[924]

[925]

[926]

[927]

[928]

[929]

[930]

[931]

[932]

[933]

[934]

[935]

[936]

[937]

[938]

[939]

[940]

[941]

[942]

[943]

[944]

[945]

[946]

[947]

[948]

[949]

[950]

[951]

[952]

[953]

[954]

[955]

[956]

[957]

[958]

[959]

[960]

[961]

[962]

[963]

[964]

[965]

[966]

[967]

[968]

[969]

[970]

[971]

[972]

[973]

[974]

[975]

[976]

[977]

[978]

[979]

[980]

[981]

[982]

[983]

[984]

[985]

[986]

[987]

[988]

[989]

[990]

[991]

[992]

[993]

[994]

[995]

[996]

[997]

[998]

[999]

[1000]

[1001]

[1002]

[1003]

[1004]

[1005]

[1006]

[1007]

[1008]

[1009]

[1010]

[1011]

[1012]

[1013]

[1014]

[1015]

[1016]

[1017]

[1018]

[1019]

[1020]

[1021]

[1022]

[1023]

[1024]

[1025]

[1026]

[1027]

[1028]

[1029]

[1030]

[1031]

[1032]

[1033]

[1034]

[1035]

[1036]

[1037]

[1038]

[1039]

[1040]

[1041]

[1042]

[1043]

[1044]

[1045]

[1046]

[1047]

[1048]

[1049]

[1050]

[1051]

[1052]

[1053]

[1054]

[1055]

[1056]

[1057]

[1058]

[1059]

[1060]

[1061]

[1062]

[1063]

[1064]

[1065]

[1066]

[1067]

[1068]

[1069]

[1070]

[1071]

[1072]

[1073]

[1074]

[1075]

[1076]

[1077]

[1078]

[1079]

[1080]

[1081]

[1082]

[1083]

[1084]

[1085]

[1086]

[1087]

[1088]

[1089]

[1090]

[1091]

[1092]

[1093]

[1094]

[1095]

[1096]

[1097]

[1098]

[1099]

[1100]

[1101]

[1102]

[1103]

[1104]

[1105]

[1106]

[1107]

[1108]

[1109]

[1110]

[1111]

[1112]

[1113]

[1114]

[1115]

[1116]

[1117]

[1118]

[1119]

[1120]

[1121]

[1122]

[1123]

[1124]

[1125]

[1126]

[1127]

[1128]

[1129]

[1130]

[1131]

[1132]

[1133]

[1134]

[1135]

[1136]

[1137]

[1138]

[1139]

[1140]

[1141]

[1142]

[1143]

[1144]

[1145]

[1146]

[1147]

[1148]

[1149]

[1150]

[1151]

[1152]

[1153]

[1154]

[1155]

[1156]

[1157]

[1158]

[1159]

[1160]

[1161]

[1162]

[1163]

[1164]

[1165]

[1166]

[1167]

[1168]

[1169]

[1170]

[1171]

[1172]

[1173]

[1174]

[1175]

[1176]

[1177]

[1178]

[1179]

[1180]

[1181]

[1182]

[1183]

[1184]

[1185]

[1186]

[1187]

[1188]

[1189]

[1190]

[1191]

[1192]

[1193]

[1194]

[1195]

[1196]

[1197]

[1198]

[1199]

[1200]

[1201]

[1202]

[1203]

[1204]

[1205]

[1206]

[1207]

[1208]

[1209]

[1210]

[1211]

[1212]

[1213]

[1214]

[1215]

[1216]

[1217]

[1218]

[1219]

[1220]

[1221]

[1222]

[1223]

[1224]

[1225]

[1226]

[1227]

[1228]

[1229]

[1230]

[1231]

[1232]

[1233]

[1234]

[1235]

[1236]

[1237]

[1238]

[1239]

[1240]

[1241]

[1242]

[1243]

[1244]

[1245]

[1246]

[1247]

[1248]

[1249]

[1250]

[1251]

[1252]

[1253]

[1254]

[1255]

[1256]

[1257]

[1258]

[1259]

[1260]

[1261]

[1262]

[1263]

[1264]

[1265]

[1266]

[1267]

[1268]

[1269]

[1270]

[1271]

[1272]

[1273]

[1274]

[1275]

[1276]

[1277]

[1278]

[1279]

[1280]

[1281]

[1282]

[1283]

[1284]

[1285]

[1286]

[1287]

[1288]

[1289]

[1290]

[1291]

[1292]

[1293]

[1294]

[1295]

[1296]

[1297]

[1298]

[1299]

[1300]

[1301]

[1302]

[1303]

[1304]

[1305]

[1306]

[1307]

[1308]

[1309]

[1310]

[1311]

[1312]

[1313]

[1314]

[1315]

[1316]

[1317]

[1318]

[1319]

[1320]

[1321]

[1322]

[1323]

[1324]

[1325]

[1326]

[1327]

[1328]

[1329]

[1330]

[1331]

[1332]

[1333]

[1334]

[1335]

[1336]

[1337]

[1338]

[1339]

[1340]

[1341]

[1342]

[1343]

[1344]

[1345]

[1346]

[1347]

[1348]

[1349]

[1350]

[1351]

[1352]

[1353]

[1354]

[1355]

[1356]

[1357]

[1358]

[1359]

[1360]

[1361]

[1362]

[1363]

[1364]

[1365]

[1366]

[1367]

[1368]

[1369]

[1370]

[1371]

[1372]

[1373]

[1374]

[1375]

[1376]

[1377]

[1378]

[1379]

[1380]

[1381]

[1382]

[1383]

[1384]

[1385]

[1386]

[1387]

[1388]

[1389]

[1390]

[1391]

[1392]

[1393]

[1394]

[1395]

[1396]

[1397]

[1398]

[1399]

[1400]

[1401]

[1402]

[1403]

[1404]

[1405]

[1406]

[1407]

[1408]

[1409]

[1410]

[1411]

[1412]

[1413]

[1414]

[1415]

[1416]

[1417]

[1418]

[1419]

[1420]

[1421]

[1422]

[1423]

[1424]

[1425]

[1426]

[1427]

[1428]

[1429]

[1430]

[1431]

[1432]

[1433]

[1434]

[1435]

[1436]

[1437]

[1438]

[1439]

[1440]

[1441]

[1442]

[1443]

[1444]

[1445]

[1446]

[1447]

[1448]

[1449]

[1450]

[1451]

[1452]

[1453]

[1454]

[1455]

[1456]

[1457]

[1458]

[1459]

[1460]

[1461]

[1462]

[1463]

[1464]

[1465]

[1466]

[1467]

[1468]

[1469]

[1470]

[1471]

[1472]

[1473]

[1474]

[1475]

[1476]

[1477]

[1478]

[1479]

[1480]

[1481]

[1482]

[1483]

[1484]

[1485]

[1486]

[1487]

[1488]

[1489]

[1490]

[1491]

[1492]

[1493]

[1494]

[1495]

[1496]

[1497]

[1498]

[1499]

[1500]

[1501]

[1502]

[1503]

[1504]

[1505]

[1506]

[1507]

[1508]

[1509]

[1510]

[1511]

[1512]

[1513]

[1514]

[1515]

[1516]

[1517]

[1518]

[1519]

[1520]

[1521]

[1522]

[1523]

[1524]

[1525]

[1526]

[1527]

[1528]

[1529]

[1530]

[1531]

[1532]

[1533]

[1534]

[1535]

[1536]

[1537]

[1538]

[1539]

[1540]

[1541]

[1542]

[1543]

[1544]

[1545]

[1546]

[1547]

[1548]

[1549]

[1550]

[1551]

[1552]

[1553]

[1554]

[1555]

[1556]

[1557]

[1558]

[1559]

[1560]

[1561]

[1562]

[1563]

[1564]

[1565]

[1566]

[1567]

[1568]

[1569]

[1570]

[1571]

[1572]

[1573]

[1574]

[1575]

[1576]

[1577]

[1578]

[1579]

[1580]

[1581]

[1582]

[1583]

[1584]

[1585]

[1586]

[1587]

[1588]

[1589]

[1590]

[1591]

[1592]

[1593]

[1594]

[1595]

[1596]

[1597]

[1598]

[1599]

[1600]

[1601]

[1602]

[1603]

[1604]

[1605]

[1606]

[1607]

[1608]

[1609]

[1610]

[1611]

[1612]

[1613]

[1614]

[1615]

[1616]

[1617]

[1618]

[1619]

[1620]

[1621]

[1622]

[1623]

[1624]

[1625]

[1626]

[1627]

[1628]

[1629]

[1630]

[1631]

[1632]

[1633]

[1634]

[1635]

[1636]

[1637]

[1638]

[1639]

[1640]

[1641]

[1642]

[1643]

[1644]

[1645]

[1646]

[1647]

[1648]

[1649]

[1650]

[1651]

[1652]

[1653]

[1654]

[1655]

[1656]

[1657]

[1658]

[1659]

[1660]

[1661]

[1662]

[1663]

[1664]

[1665]

[1666]

[1667]

[1668]

[1669]

[1670]

[1671]

[1672]

[1673]

[1674]

[1675]

[1676]

[1677]

[1678]

[1679]

[1680]

[1681]

[1682]

[1683]

[1684]

[1685]

[1686]

[1687]

[1688]

[1689]

[1690]

[1691]

[1692]

[1693]

[1694]

[1695]

[1696]

[1697]

[1698]

[1699]

[1700]

[1701]

[1702]

[1703]

[1704]

[1705]

[1706]

[1707]

[1708]

[1709]

[1710]

[1711]

[1712]

[1713]

[1714]

[1715]

[1716]

[1717]

[1718]

[1719]

[1720]

[1721]

[1722]

[1723]

[1724]

[1725]

[1726]

[1727]

[1728]

[1729]

[1730]

[1731]

[1732]

[1733]

[1734]

[1735]

[1736]

[1737]

[1738]

[1739]

[1740]

[1741]

[1742]

[1743]

[1744]

[1745]

[1746]

[1747]

[1748]

[1749]

[1750]

[1751]

[1752]

[1753]

[1754]

[1755]

[1756]

[1757]

[1758]

[1759]

[1760]

[1761]

[1762]

[1763]

[1764]

[1765]

[1766]

[1767]

[1768]

[1769]

[1770]

[1771]

[1772]

[1773]

[1774]

[1775]

[1776]

[1777]

[1778]

[1779]

[1780]

[1781]

[1782]

[1783]

[1784]

[1785]

[1786]

[1787]

[1788]

[1789]

[1790]

[1791]

[1792]

[1793]

[1794]

[1795]

[1796]

[1797]

[1798]

[1799]

[1800]

[1801]

[1802]

[1803]

[1804]

[1805]

[1806]

[1807]

[1808]

[1809]

[1810]

[1811]

[1812]

[1813]

[1814]

[1815]

[1816]

[1817]

[1818]

[1819]

[1820]

[1821]

[1822]

[1823]

[1824]

[1825]

[1826]

[1827]

[1828]

[1829]

[1830]

[1831]

[1832]

[1833]

[1834]

[1835]

[1836]

[1837]

[1838]

[1839]

[1840]

[1841]

[1842]

[1843]

[1844]

[1845]

[1846]

[1847]

[1848]

[1849]

[1850]

[1851]

[1852]

[1853]

[1854]

[1855]

[1856]

[1857]

[1858]

[1859]

[1860]

[1861]

[1862]

[1863]

[1864]

[1865]

[1866]

[1867]

[1868]

[1869]

[1870]

[1871]

[1872]

[1873]

[1874]

[1875]

[1876]

[1877]

[1878]

[1879]

[1880]

[1881]

[1882]

[1883]

[1884]

[1885]

[1886]

[1887]

[1888]

[1889]

[1890]

[1891]

[1892]

[1893]

[1894]

[1895]

[1896]

[1897]

[1898]

[1899]

[1900]

[1901]

[1902]

[1903]

[1904]

[1905]

[1906]

[1907]

[1908]

[1909]

[1910]

[1911]

[1912]

[1913]

[1914]

[1915]

[1916]

[1917]

[1918]

[1919]

[1920]

[1921]

[1922]

[1923]

[1924]

[1925]

[1926]

[1927]

[1928]

[1929]

[1930]

[1931]

[1932]

[1933]

[1934]

[1935]

[1936]

[1937]

[1938]

[1939]

[1940]

[1941]

[1942]

[1943]

[1944]

[1945]

[1946]

[1947]

[1948]

[1949]

[1950]

[1951]

[1952]

[1953]

[1954]

[1955]

[1956]

[1957]

[1958]

[1959]

[1960]

[1961]

[1962]

[1963]

[1964]

[1965]

[1966]

[1967]

[1968]

[1969]

[1970]

[1971]

[1972]

[1973]

[1974]

[1975]

[1976]

[1977]

[1978]

[1979]

[1980]

[1981]

[1982]

[1983]

[1984]

[1985]

[1986]

[1987]

[1988]

[1989]

[1990]

[1991]

[1992]

[1993]

[1994]

[1995]

[1996]

[1997]

[1998]

[1999]

[2000]

[illegible] 30. If a shoulder is found lying on to the grass at both sides of the path, the path is "closed" and a man will turn back to his home and not proceed on his journey. It would be unlucky to continue.

[illegible] 31. Snakes seen in sofa are a bad omen.

[illegible] 32. The shoo-moon known as Shoshola mangala ("the entire span of not bills"), and the only antelope, if seen on the path, are of bad import.

33. To knock the toe against a stone on a journey is bad luck; if blood flows from the big toe, it portends to good luck.

34. A man knocking the sole of his foot against a stone known that some one is speaking ill of him.

35. A person whose hiccup lick known he will receive a present.

36. Twitch of the circumscribed muscles of the right eye indicates that something good will be seen. When the left eye is affected, the outcome is bad news.

37. The cry of the bird egoldoldo (the green turner), indicates to the hearer that he is about to meet some one, either friend or enemy.

38. Anyone who kills one of the large stick-insects (Phasmidae) known as chikoso chikoyo, will always be breaking the cooking pots afterwards.

[illegible] 39. The natives believe that the accomplice of the Hippotion aurica moth will jump on the breast. It is called chiwotchila mamala, "does which jumps on the breasts," and children seeing it will cover up their nipples with their hands.

40. Of Lomlo, the Mangoyoni, there is a saying:

"Lomlo gogoshimgoyoni ashiki"

"The hooded mangoyoni adores each other (at) the meal"

[59]

It is said that mangoyoni assist one another when being hunted. When one is dead, a hook one more is so close to the pursuer that he goes after this one and leaves the dead one, and so they keep it up till the pursuer is exhausted.

41. Chinda, the frog. Children are told they must never kill a frog, or he spirit will come at night with partridge mode of movement and make them cut it. If a small child playing with a frog kills it by accidentally, he will tear off a small piece of his native cloth and place it by the frog as an offering.

42. Chimbwali (Mangoyoni, Chin.) the wound. It is said that the wound hides its body and leaves separate for some, so that a children seeing it, grow up to pick at it, whereupon the wound turns round quickly and catches the children with its mouth.

43. Chingoyo, the shrub (from ko-ngo, to go to shrub), on account of its odor, is said to apply the same to a cut-hole and make wind. This will render harmless all the cats in the harvest and he can then dig them out at leisure.

44. Mbuli, the honey badger, when hunted is always said to attack a man by attempting to seize the testicles. Natives when they hear this animal, the stones in their hole shelter so that they hang down between the legs to defeat the badger.

771
774
826
539

68. A child, when one of its milk teeth drops out, stands some five yards away facing the door of the hut and throws the tooth over the roof of the hut, saying:

"Al Shangalo [illegible] [illegible] [illegible] [illegible] [illegible] [illegible]
"Old man tooth your there is, give me my of good one!"

771

Religion. The matter of the religious beliefs professed by natives of East Central Africa is one beset with many difficulties to the student of today. It has been the subject of many essays by workers in the missionary field, but the wide contact of the natives of Nyamland with missionary effort during the past thirty years has done much to confuse the problem, and one finds that many misstatements in their writings rather color the picture with their own feelings.

771
761
774

I think probably the Tao with whom I am now concerned have a truer conception of their own beliefs than many of the subject tribes among whom mission teaching has more easily taken root. The religious beliefs of a people are to a large extent the reflection of the circumstances under which that people live. The outstanding event to all natives is death. At death, something is lost to the body, without which life is impossible. This is the *mzimu* which may be translated "soul" or "spirit." The *mzimu* is said to leave the body of the dying man when he becomes moribund or unconscious. It appears that this same *mzimu* may leave the body during unconscious states unconnected with death, as when a man faints, in epilepsy, and during sleep.

774

Apart from this evidence of the dissolution of the *mzimu* from the living body, the Tao believe that a man's shadow is an objective manifestation of the soul and they will say "the shadow is the *mzimu*." Fear is experienced if a man jumps on the shadow of his fellow. Light is also thrown on the constitution of the *mzimu* by the belief in a certain evil-spirit which dwells in deep pools. It is called *shimalo-mzai*, which means "one who may finish (drink up) all the water." The superstition regarding this evil spirit is that it can suck the blood from your shadow as you stand at the edge of the pool, till you become so weak that you fall in and are drowned.

774
776

After leaving the body at death, the *mzimu* goes to take up its place in the spirit-world, occupying a position corresponding to that held by the man during his life. With a truly materialistic conception, the soul is supposed to have all the attributes of the dead man, to be wealthy in proportion as the man was so on earth, and its relative position will be identical with that which he held among the living. The tribal chief becomes a paramount chief in the spirit world, the lesser chief holds sway in his lesser capacity, etc. We shall see that in innovations, where the tribe is threatened with subjection, it is the late paramount chief who is appealed to for help, and when one headed chief is at war with another, the chief's dead predecessor will be called upon for aid. When a village is moved, it is from the spirit of the dead headman of the village that success in the enterprise is sought. Similarly, in family trouble, some dead ancestor is entreated to set things right, while a native

775

3:Shannon D-5 (ca. 1912) 1922 FT7 Tao FT7

775 setting out on a journey may ask the intercession of his deceased father to secure his safe conduct.

The spirits of the dead are in general said to dwell "above." They haunt the graveyard or visit the scenes of their life, and may be associated with natural objects or with certain animals, into which they are supposed to enter temporarily. Thus a dead man's spirit will visit the earth mound which marks the site of his old house in the village. The spirits of headmen are often thought to haunt the big trees of the village open space; such trees are held sacred for this reason. Some time ago in the old village of the chief, Mulungu, a party of women cut down one of these trees for firewood, ignorant of its sacred character. With the crash of the falling tree, they became frightened, and one of the present Mulungu's wives came upon the scene, predicting all kinds of evil to follow unless reparation were made to the insulted spirits of the dead chiefs. The remains of the tree lie there to this day, untouched except by natural decay.

To quote another example, near a bathing pool called *jipanali* (from *ku-jipa*, to bathe, and *wali*, the initiated) where boys bathe after initiation, on the Dumai river, there is a small interval whence a cloud of spray rises and a continued rumbling sound comes forth. Here, the old men say, you can hear the drumming of the spirits, while you may see pythons and the crowing cobra in whom bodies the spirits live.

As I have already mentioned, the spirit-world so far as the native has speculated on the problem is "above" in quasi-materialistic heaven. If questioned closely, the phrase "I do not know" will figure largely in his replies. He will not say there is any "marriage or giving in marriage." If a child dies, they often say, "So-and-so (some deceased person) wants a water-carrier." Indeed they often use a phrase under the circumstances identical with an English expression, "They are calling away the children."

Natives attribute to the spirits of the dead the power to partake of anything on this earth, such as food. They have no exact ideas with regard to animals and what happens to them when they die. They will not tell you that an animal has an essence but at the same time, a goat is often killed at a funeral, with the remark, "The goat will follow the dead man." The goat's meat will be eaten by those assisting at the funeral; hence there is the suggestion of the idea that animals' spirits do go to the spirit-world. [825]

776 In referring to the spirit-world, the native generally uses the word *ku-mulungu*, and here we have the second element in their religious beliefs, namely a supreme being; *ku-mulungu* means at the place of or with *mulungu*, the supreme being. *Mulungu*, however, takes a very secondary place to the *mizimu*. He is referred to only in a general way. In answer to such questions as why has a woman an albino child born to her, she will say "*Mulungu* made it so"; in fact in reply to many questions to which the native has no answer, he will use practically our English phrase, "Oh, God knows!" and with about as much meaning. [845]

To *Mulungu* is ascribed the sending of the rain, but apparently he has no part in giving good crops or causing a plentiful harvest, neither has he any direct interest in man's affairs,

see he be "God the creator," of men or earth. He, however, receives the spirits of the dead. Should he refuse to do so, a man continues to live. When a man has recovered from some commonly fatal disease, the natives say, "*Mulungu wakanda* (refused him)!" or if he has been very near to death and then recovers, they say "*Mulungu wamenda* (spat him out)".

It would thus appear that among the spirit beats there is a regular law of precedence, and presiding over all is a supreme being, but all this is so remote as to have little importance for the living. The vagueness concerning *Mulungu*, I must admit, has given rise to some doubt in my own mind as to how far he was a deity with an entity of his own in their religion of a little time ago.

Ancestors tend to be forgotten in proportion to the length of time which has elapsed since their death, unless they played some important part during their lives; then some particular one may be remembered to the exclusion of others, and to him prayers of intercession are offered. In the case of chiefs, the names of a long line of rulers may be remembered on occasions when all else about them has fallen into oblivion. In some possible originally *Mulungu* was the oldest ancestral chief who was raised up as a supreme being but who, in the process, has lost all other attribution. On the other hand, the word often refers only to the place where the spirits dwell; this may have been the original meaning.

There is no religious worship in the proper sense of the term but only propitiation, prayer for intercession, and return of thanks for favors granted. The keynote of this ancestor worship, the sum total of their religion to the exclusion of the belief in a supreme being, is fear. We have seen at the funeral that everything is done to lay the spirit at rest. The people wish never to hear of the spirit again. It is chiefly with a view of averting some evil that worship takes place or with a view of expiating some crime that sacrifice is made or to alleviate some suffering that communication is sought with the spirits. It is a question of, "Do as we have, do not vent your wrath upon us for what we have left undone," rather than "Keep us from doing evil, save us from being our own enemies." It would appear to be a religion of fear, not of love and kindness, though there are glimmerings of a search after "a hand to guide and protect," as in the prayer given below and also in the action taken when removing a village.

As a corollary of this system of ancestor worship, there is no real priesthood. A man asks for favors for himself; the head of a family petitions a deceased father or some more remote ancestor of greater importance; the headman intercedes on behalf of the village with the spirit of a predecessor; a chief takes the place of high priest on the occasion of a tribal supplication to a former ruler, though he may be replaced by some one of his who may who acts as intermediary.

Some form of sacrifice is offered with the prayer, and often some omen is sought as a sign that the prayer is granted. For this purpose, flour made from millet called *ulupwai* (*uwuku*, Chin.) is commonly used. The word *ulupwai* probably includes any sacrificial offerings.

A man leaving his village on some expedition and wishing to be assured of safe conduct will promise some millet beer. Going quietly into his house, he squats down in one corner and gently sifts the flour through his hand so that it falls on the floor in the form of a little cone, repeating as he does so, his prayer for safe conduct beginning and ending with the word *shadé! phaw!*

[539] "*Shadé! shadé!* [illegible] *mulungu* [illegible] *phaw!* [illegible] *shadé! shadé!*"
"*Phaw, phaw!* [illegible] *shadé! shadé!*"

The flour covers the cone of flour with a basket. On the morrow, he will uncover it to see what has happened. According as the cone has remained intact or has fallen to one side or the other, the omen indicates whether or not the journey should be undertaken, the omition being caused by the spirits to whom his supplication was addressed.

Again, there may have occurred much sickness in a village and the people conclude that the past has come to remind them that they have not been attentive to their deceased chief. "*His grave-house in the village has been allowed to fall into decay,*" said an *ou*. They will decide that his spirit must be propitiated. The grave-house is rebuilt, a pot is sunk in the ground, and beer is poured in, and round shaped heaps of flour are placed. Prayer is made to the chief at whose grave they are worshipping, supplicating him in person and "*all others who are with you at Mlungu,*" asking that he will no longer cause ill to befall the village.

When a village is moved, the beer-pot from the grave of the old chief is taken to the new village and a ceremony similar to that just described takes place, with the prayer that he will come to the new village and continue to exercise his benevolent care over his people.

In 1930 when there was a threatened famine on account of long drought in Rondo district, Malenya decided that supplication for rain must be made to the spirits of his chiefs-ancestors predecessors. Kasunga, one of Malenya's wive sons, acted as high priest. A large amount of beer was brewed and the night before the ceremony, twenty sheep and fifty goats were slaughtered. Plates of the meat, of rice and porridge were then placed on the ground round the grave-house of the old Malenya, and pots of beer set into the ground at intervals. At the head of the grave, little heaps of mingani flour were arranged. This flour had been prepared by each of Malenya's wives as were not near a menstrual period. The following morning, a fence was built round the grave, outside which all the people assembled, while beyond them again was a second fence. Kasunga, accompanied by an assistant then appeared, and avoid absolute silence entered the inner enclosure. He addressed to the old Malenya, at whose grave they were all assembled, a prayer for rain. He then repeated the prayer, invoking the aid of all the past line of chiefs down to the reigning Malenya, repeating their names. Returning to the outer enclosure, he again uttered the prayers, all the assembled multitude repeating them after him while lying face down, resting on their

[516]

leaves and allows, at intervals emptying their bodies from side to side and stopping their heads. Encouraged thus endowed all to go and bathe, men and women separately. As they returned from the stream, rain began to fall.

Intercession on behalf of the sick may be made, especially by anyone who is likely to be accused of causing the illness by witchcraft.[1] The man standing with some unidentified, decomposed and a little in front of his body, the bamboo regulus, takes some water in his mouth and discharges it in a stream on the ground, (probably as a sign of purification of his tongue), and then invoking "all the spirits above," asks that they will intercede to restore health to the sick man and bear witness to his own innocence of any wish to do the sick man injury. He prays to the word meaning to offer sacrifice and prayer.

Harvesting and hunting are occasions when sacrifices may be offered. It was formerly the custom for the chief to determine the day on which harvesting of millet should begin. On the day appointed, a big drum was beaten in the village and word passed round; then everyone would go down to his garden, gather a head of millet, and bring it back to the village where it was all heaped over to the chief's bamboo. After drying and threshing, a little of the grain was laid at the grave of an old chief by one of the longing chief's advisers, the remainder being again distributed to all the people gathered together in the village meeting place, who ate it raw. After this ceremony, harvesting began.

In passing through a millet garden, if a child asks his mother to give him some to eat, she plucks a heads or two and reverently laying one at the foot of a mawn tree for the spirits or at the base of some other tree, if she cannot see a mawn, she gives the rest to the child.

When a hunting expedition makes its first killing, part of the flesh of the animal is laid at the base of a tree as a thank offering to the spirits and in anticipation of further favours to be vouchsafed. All such offerings are supposed by the natives to be partaken of by the spirits, though they are well aware that they do not actually diminish in quantity. There is an interesting point in this connection: any man who has acted as adzin (undertaker) to some well-known man may appropriate these offerings. In the case of the hunting offering, he will run round the tree, saying, "I am a hyaena, the spirits will not mind me," and will then take part of the flesh offering and eat it.

In the same way, a white may drink from a grave bowl-pot after three days, when the spirits are supposed to have taken what they want.

With the exception of the mawn tree above mentioned (Jaiben, Chin.), and possibly another called sulu-mawn (Chin.), which is never used as firewood and which is supposed to be used by ramal, I do not think there are any sacred trees properly so-called. Miss Warner supposes that many of the big trees (often a species of *Ficus*) in villages are sacred.[2] The truth is, I believe, simply that a village is made naturally round a big tree which conveniently allows its shade for the village meeting place. The spirits of deceased chiefs may

[1] This means, p. 300. [2] The natives of British Central Africa, op. cit., p. 80.

[illegible] be supposed to live in such trees. They are accordingly natural objects for them to occupy, in fact practically the only ones to be found in villages. Trees may accordingly, therefore, be looked upon as in some degree sacred. Almost each town enclosure or place of office may be placed as an offering to the spirits of the departed. But the Tiv do not erect little huts in their vicinity, being about with strips of cotton as is the custom among the Ingessis.

[illegible] Shakespeare* mentions the spirits in connection with Sudre and other hills round Shangiya and supposes them to be the spirits of the places themselves. This I think is improbable; they would probably turn out to be spirits bearing the names of long departed Ingessis chiefs whom the Imalgyori Ityangwabo Tiv remembered just "to be on the safe side," since they had seen and taken the country which long ago belonged to the former tribe. When approaching or passing any spot held to be the dwelling place of spirits, salutation is made by clapping the hands.

[illegible] Spirits of the departed may enter into animals or may take the form of animals, commonly frogs and sometimes large snakes (pythons), but this belief is not so general among the Tiv as among other tribes, in my opinion. An animal which is so possessed is called Ingwabo, from Ingwabo, "to be transformed."

[illegible] Apart from this habitation of inanimate objects above mentioned by tribes, there is nothing that points to a belief in Animism among the Tiv, so far as I know. Neither hills, rocks, streams, lakes, nor trees have their own spirits, nor are they endowed by the native mind with life.

Deceased persons appear to the living in dreams, the native apparently believing that the deceased appears in his material body.

[illegible] They believe also in revelation of wishes of the deceased through the medium of the living. The spirit of the deceased is supposed to enter into the medium. The medium, I am informed, is always a woman, never a man. From the descriptions of some of these [illegible] revelation dances, there can be no doubt that they are manifestations of hysteria. The medium works herself up into a frenzy of excitement and in her delirious gives out the name of the deceased, the voice which speaks being that of the spirit within her. She sits on the ground and leaves at the mouth, uttering the word of revelation which is generally to the effect that some deceased chief's spirit is feeling neglected at the neglect of his heirs; the voice may go on to say that certain practices are forbidden, or demand that certain rites be observed by the people. The spirits which possess her are generally spoken of as mwanin, a word which, though sometimes used as equivalent to mutum, usually seems to have rather a distinct significance. Insane persons are called mwanin and are thought to be possessed by a spirit, and vapor baths with medicine may be prescribed for their cure. In the case of the death of anyone who is possessed, in answer to my interrogation, I have been told that both the spirit which has entered into the man and his own mutum leave his body.

* Op. cit., vol. i, p. 56.

As an example of another kind of hierarchy may be mentioned a woman called Mabiti Chikanga, who, though an *Anjanja*, was well known among the Tao of Ensiko. She was consulted on many occasions about the future, about rain, or the prevention of disease. She was a woman of quiet ways and greatly respected; she had no fixed abode but was resident everywhere and given food and shelter. She would sometimes disappear from the district and travel to far distant places. I was, here to her when a young woman, was lately a patient under my care, a man of about forty-eight. On one occasion she was consulted about an epidemic of ulcers among the people near Ensiko. She asked all the people from the villages to go down to Lake Shirwa and to take a white fowl with them. When they had all collected, she appeared, carrying in each hand a little gourd containing whipped flour, and a small open basket on her head. She took the fowl in one hand and then proceeded to walk into the water, saying she would have to go to a little hill on an island in the lake called *Chisin Mpiri* and that she would come back in three days. She then walked on into the water and disappeared below its surface. In three days time, she returned to the village and said that the women must give up dancing the *chiyanda* dance for twelve months and all would be well.

On other occasions she usually worked along similar lines. Consulted as to whether or not some sick person would recover, she always answered with the same formula, if she thought he would die, "The house is prepared for him and medicine would avail nothing!"

There are certain other supernatural persons or spirits to which reference must be made. *Chimbwi-mwi* has been mentioned above. *Mawawa*, a word which Rotherwick translates as "madness, idiocy," really refers to the delusions and hallucinations which form part of the perceptions of the insane. The word also has the meaning of obsession, phobia, and hesitation; thus the native may of an on about to be slaughtered that shows signs of realizing the approaching evil, "It has mawawa." On the other hand, they say the hartebeest is a foolish animal that does not know what to do when hunted: "It has mawawa, it is a deluded animal." Again, the baboon and the crow "have mawawa"; they are possessed of omens or hallucinations which warn them of the approach of any enemies before they can be seen or heard; they cannot be stalked. In all these cases, the word of hallucinatory ones pertaining some unknowable, the rule of the delusion (mawawa patient, and that which appears to warn the crow or the baboon, are all mawawa and are, I think, supposed by the natives to have some kind of materialistic form.

Ndalaka: when the mawawa[1] do not wish immediately to devour the body of a deceased person which they have raised from the grave, they cut off the arms and legs at the elbows and knees and insert medicine into the stumps; these living-dead are then compelled by the mawawa to live in caves and hollow out hills during the day and to follow them at night in their travels, "like a herd of goats," to be eaten as required. The ndalaka may be heard as they wander along in the night, making sounds like a cat's mew. A woman will

[1] See Bergman, op. cit., p. 200. [2] This mawa, p. 200.

never leave any food outside at night, not even the shell from the grain she has been pounding, but these most miserable of beings be attracted by it.

Chinese is a word common to several tribes and among them appears to have various shades of meaning. Among the Wayao, the Ilwa are "the little people" of the Ipamdawa order. They rob the gardens and caves out among the pumpkins; their little footprints can be seen where they have passed hither and thither; fruits and vegetables that they touch will become bitter. To prevent these disasters, the Yao, at the time when their crops are ripening, place different kinds of vegetables at cross-roads, hoping thereby to satisfy the Ilwa and prevent them coming into the gardens. As far as I am aware, the Ilwa have nothing to do with fairies and are in no way connected with *Wanga*, to be mentioned below, as Mandawalé believed.[1] The chinsee is variously said to be "like a man but rather like an animal." He has two legs but goes on all fours.

The Yao describe another legendary race of "little people" who used to live in this country and who may still be met with, — "who knows?" They were of a very small stature, grew long beards, were very wealthy, quarrelsome, and fierce, and carried spears. When anybody met one, he was immediately asked: "*Mwanbwale Iwaqa?*", "From how far did you see me?" and it was always well to pretend to have seen the little man coming a long way off and make him believe he was considered quite a big person; if you said "Hallo, I have only just spotted you!", he would immediately spear you. They are commonly supposed to dwell on the tops of high mountains and are less numerous. They are called the *Mwanbwale Iwaqa*.

There is no relation so far as I know between these two classes of "little people," but I think these stories go to uphold the theory recently enunciated by Hastings Gulliard in his Westerlin Lectures (1914) that folk-lore fables of lobgoblins, etc., have a basis in fact. He believes that dwarf races at one time were to be found, possibly over a very wide area of the globe. In this country, I think it may be that we see the transition from historical facts to true fairy stories.

The *Anyanja* have the same legend about these "little people," the *mwandi mwabali* ("where-did-you-see-me"); it is indeed not only wide-spread throughout this country, (the *Akonga* and *Ankonde* in North Nyasa district speak of the *mwandimwanda* who ask the same question), but there is a very similar legend among the *Akikuya* in British East Africa.[2]

The chinsee is doubtless the *chirani* of the *Anyanja*, mentioned in Scott's dictionary,[3] as Miss Werner[4] has suggested, for one finds that among the *Anyanja* at the southern end of the Protectorate, the chinsee is described as having only one side to his body so that he is invisible when viewed from the off side, thus resembling the *chirani* who has one half of his body made of wax.

[1] Op. cit., vol. 1, p. 11. [2] M. W. H. Beech, 'Pre-Swahili antiquarts of East Africa,' Diss. London, 1919, p. 40-41.
[3] Op. cit., p. 87. [4] British Central Africa, op. cit., p. 18.

D-Swanson D-6 (ca. 1910) 1933 FFT Yao FFT

Lumbe Mlungu is the prophet of Isoma, a man of great height who walks the round of the country, stepping from hill-top to hill-top along "the fairy way," the "*Mlwa na Lumbe Mlungu*," which is supposed to run right around Nyasaland and never to cross a river, starting and ending sometimes near the junction of the Shiré with the Zambezi river. As he goes, he can be seen from a hundred miles away. He carries the Isimbo instrument and plays as he walks, singing: 776

"*Kalwa* [illegible] *mapo* [illegible] *Indipo mwiji* [illegible] *mwimbo* [illegible] *mlungu*" [539]
"You my wet (in trouble) with the midges therefore I must call up the wasps, the means of healing!"

which might be rendered, "You people grumble about small troubles, so I will teach you to know better by inflicting great ones." When he is seen, there will be famine.

It will be convenient here to allude briefly to some of the beliefs connected with meteorological phenomena, as some of them have a bearing on native religious beliefs. The remarks made under this heading for the *Anyanja* hold good for the Yao. The morning and evening stars are called *Yamtitile* and *Yamwalonga*, the good cook and the bad cook. They are looked upon as the two wives of the moon, one of whom feeds him so well that he grows fat, the other who does not, so he wastes away. The constellation of the Pleiades is called *Jimbi*; the Milky Way, *Lishinga mwiti*, "the rainbow of the night," when high in the heavens, dawn is near. When shooting stars are seen, natives exclaim "*mapolo mlinjo!*" *Mapolo* is a many-pointed arrow. Eclipses are recognized but no explanation is vouchsafed. Thunder is supposed to be the noise of rain falling in the heavens before it reaches the earth. The rain is sometimes supposed to be the condensing steam from an enormous pot of water boiling over a furnace fire in heaven. The lightning is conceived as a lizard-like animal which dwells in the clouds and darts out from behind them and comes to earth and breaks up trees and may kill a man. Mira is supposed by the Yao to be its movement. The animal is called *Kjusi*, and is the same as *Kyumbe* of the Ankipata who consider the rainbow to be the broken egg-shell of the lightning dragons' eggs. There is a large red compound fly, a species of *Harmonthus* also called *Kjusi*, which is in some way connected with the lightning. No Yao child would ever touch this flower. Children are always advised never to seek shelter under a big tree but always to make for a bamboo thicket, for if the lightning strikes the bamboo and splits it, it will get caught inside the hollow stem. 521 [529]

Gales of wind are said to emanate from a plant called *Chenpede*. It is described as having one process like an elephant's trunk and others like two fingers. It is found on the tops of very high mountains, growing alone and surrounded by bare rock. This plant is used by medicine men to gain supernatural powers. *Chenpede* is also the name of a parasitic plant on the charcoal trees in Nyasaland. [534]

The world is taken by the natives as they find it; to them no explanation for its being is necessary. So far as I can find out, there is no idea among the Yao of a Creator. The 776 773

[illegible] religion of mankind is explained in a story given elsewhere. It always takes no part, nor is the supernatural even invoked in explanation.

The religion of the Tso-way Ogre be summed up as monotheistic worship plus an Ill-defined, unverifiable belief in a supreme being. Their religion is not subjective. There are certain spirits of evil, demons, fairies and supernatural beings and animals which, however, do not play any real part in their religious beliefs.

Native Sayings. Natives are very fond of sayings, many of which are of the same nature as our own proverbs. The meaning of many of them is, however, not always self-evident but depends on some little story with a moral.

The following are some of those which I have collected among the Tso-way Tribes:

1. *Ahwanda-Mandalo!* (or Ajadal)
   He caught a fish, (a mouse!)

An expression meaning "He slipped down." The exclamation being used when not or when they under foot.

2. *Tlanda ah a'nana!*
   Chewing is in the eyes (evident).

An expression meaning "Look out; some one is after us!"

   Kalala ahwjana!
   Rabbit is dead!

This is a Mang'anja equivalent to the above.

3. *Chanyaylana mankhalalala mwiyanda!*
   A thing that did not have they ended in seeing the hatel

An insect which had not listened to advice about the dangers of eating an herbs used as vegetables, was gathered up by a woman and cooked with them.

An expression used with the sense "If you do not take advice and anything happens to you, it will be your own fault."

4. *Mlala ah a'wapilwanda!*
   Medicine is in the mud!

Meaning "You are forewarned; it is your own fault now!"

5. *Kwapilwanda mandalala ahkalalana!*
   Mr Would-Be-Clever they left with the dead!

Ka-kalanda, to be clever (to show off); an expression made to a newcomer who exhibits jokes in a discussion. It has reference to the following story and means that anyone joining a party unbidden may find himself in an awkward situation. Some strangers came to a village, and after being given food and quarters, all retired for the night. One of them, however, Mr. Would-Be-Clever, hearing something going on outside crept out of the house to find out what was happening. Seeing some people playing at ninth-ball, he

joined in the game, vanished. Next morning, the half-crow in his direction and sniffing it in the moonlight, he suddenly found himself grasping a bleached human skull, while everyone else had vanished. There he had to stand frightened as he was till the morning, when he was found in this ridiculous predicament.

9. *Tongwee mekinge mojoee pogoee!*
Mr. [illegible] Tongwee mekinge the baboons of the crow (Israel).

Tongwee, meaning "*If I were you*," is also used.

This expression signifies "*A man cannot serve two masters*" or "*He who tries to please everybody will please none*," as is explained in the following story: Mr. Tongwee and another man had their gardens adjacent to one another but the latter's was next to the forest and the baboons used to come and ravage his crops. He therefore consulted a medicine man who gave him medicine to put all over the garden, which would cause all the baboons who came to the garden to die. "*But*," said the medicine man, "*you must promise to bring me the Mokpo!*" (the little baboon which acts as sentinel and guide). The man did as he was told with the medicine and in the morning found all the baboons dead in the garden; on picking up the body of the *Mokpo*, he was just going off with it to the medicine man, when Mr. Tongwee in the next garden who had been a witness of the good wrought by the medicine, said, "*If I were you I should not take the little Mokpo, but the biggest baboon to give to the medicine man*," so after hesitating, he picked up the biggest baboon to take instead of the little one. Immediately, it and the baboons came to life again and ran away into the forest!

10. *Mokpo ee ennde ennde ejoo!*
While they delayed, the children singed the corral out!

This expression has the meaning, "*If you do not do a thing at once, you may be too late!*" and has reference to another story. Some people not knowing killed an animal which they did not recognize, so one of them went back to the village where he found the old man all shouting and told them they had killed an animal they did not know. The old man said, "*We will come and see it!*", but they went on shouting until a second message came. Still they said, "*Yes, we are just coming,*" but they did not go; so the boys not knowing any better, instead of removing the skin, which is of value, with the hair on, singed all the hair off which was their ruination with some animals, so that eventually, when the old man arrived they found they had lost a valuable skin. Another saying with the same meaning is: *Mokpo ennedebede ennede po ngoee*, "*By delaying she gave birth to a child on the road.*"

11. *Angebile kpoee ennebenebile!*
(He who said, "I look at the sun", he went away! [illegible] *)*
Ole ngoogo ennide be ennd!
Mr. The-One-Who-Asks arrived at the village!

[illegible] An expression indicating that a man who is anxious about doing a thing may come to grief, whereas the man who takes the trouble to get information gains his object.

9. [illegible]
In the moonlight you cannot cut an [illegible]

A free English translation of this saying would be, "There is a proper time for doing everything." It involves the implication that doing a thing at the wrong time may result in evil.

10. [illegible]
[illegible]

An expression indicating that careless speech may bring a man into trouble: the mouth is looked upon as the door of the body. The expression has reference to a story which points a moral against meddling busy. There was once upon a time a big chief who had a headman (*Ogabanwu*) to whom he repeated all his messages. One day, the chief lowered here for hoeing and the big drum was beaten to call all the people together, and then, the chief leading, they all went to the gardens, but the headman who used to smoke hemp lagged behind and in coming later, while crossing an open glade between the village and the gardens, he saw a human skull beside the path. Half intoxicated with the hemp, he kicked it, saying "Who killed you?" The skull answered, "*Ogabanwu!*" The man was frightened and so kicked it again; then going off to the chief, he related what had happened. The chief and all the people returned with the headman to the place where the skull was and the headman, kicking the skull, asked again who had killed him, but no answer came, and so with a second interrogation. Then the chief had the headman bound and said, "What you say cannot be trusted. You waste our time with your untruths," and he had him killed.

11. *Ada* *Ada* [illegible] [illegible]
Having hatchets you must not hide the sword

An expression meaning "If you have no further use for a thing yourself, do not throw it away; it may be useful to others."

12. *Ada* *Ada* [illegible] [illegible]
Today today the [illegible] was [illegible]

A saying meaning "In who hurries will not do best!" *Ada*, today; *Adada* here has the meaning "in a hurry." *Ofumbe* is the name of a small jet black bird. The story goes that when all the birds were being painted, the ofumbe bird was very impatient and coming up to the painter, said, "I must be done today; I am in a hurry." The painter said it would take longer but acting on ofumbe's persistent urge to be done quickly, he just took up a brush and painted him black all over. The following is sometimes added:

Ifumbelaya [illegible] [illegible] [illegible]
Being painted the ofumbe bird came by again (or marks on its head).

539

[illegible] *Chendage, [illegible]*
Chendage, they are [illegible]!

An expression depending for its meaning on the story given below, used by a husband to his wife or by one woman to another, intimating that the woman has delegated her work to some one else and is not looking after things properly. A man killed a guinea-fowl and gave it to his wife to cook. She, however, gave it to her servant, Chendage, to cook in the house while she sat doing knitting on the veranda, calling from time to time to know whether it was cooking well, to which always came answer in the affirmative, "ah." When the meal of porridge was ready in the evening, and she went to get the guinea-fowl from the pot in the kitchen, she found that it lay in the pot in cold water as her servant had only put one handful of grass to cooke the fire under the pot and then left it.

[illegible] *Kwa'mulile [illegible] [illegible]!*
By holding a cook stick (to see if the hare was ready) before it had bin done!

An expression used to a man who by precipitate action without due caution loses that which he seeks to gain as in the following case: If a man seeks a girl in marriage whom he wants to take to live with him far away in his own village, instead of himself settling in her village according to custom, he must not let this be known, or he would be refused.

[illegible] *Wakuiye [illegible]!*
(Your wife) she is showing the porridge stick!

An expression used to a man who is henpecked.

[illegible] *Mwa na kakuskiki!*
(So has or you have) the possession of a sickle!

An expression used to anyone who keeps on asking for something and is a nuisance.

[illegible] *Mkpwal [illegible] ku nsu [illegible] ku [illegible] [illegible]!*
The flour (ought) to be painted on the forehead and on the back of the head also!

Mkpwal is the offering of millet flour to the departed spirits, or as here, the mottled flour used by the chief to smear the front and back of the head of each boy at the end of the initiation ceremonies. The meaning of the expression is that "one should not only look forward to the good things of the future but also remember all the help that has been given one in the past." [768]

[illegible] *Mkangaje [illegible]/[illegible] [illegible] [illegible] [illegible]!*
He who comes and goes and comes again they shut him with a cross in the hutcoke!

Of which the sense is "a man may do wrong once but if he continues to do so, he will suffer for it."

[illegible] *Lipakwe [illegible] [illegible]!*
The pig was made a scapegoat (on account of) the ghosts!

A pig who was found picking up the remnants of a crop in a field which had been reaped, was thought to be the thief and killed.

539 [illegible] [illegible] [illegible]
[illegible] "[illegible]" [illegible] [illegible]

A man had put a lot of fish on spits to roast round the fire. While he went to get some more firewood, a thief came and took all the fish. A stranger then approached and was examining one of the sticks, saying, "There must have been a very nice fat fish on this stick," when the owner returned and immediately accused the innocent stranger of stealing the fish. A native seeing serious a corpse will run away, using the above expression, for if he reports the matter, he may be the first to be accused.

[illegible] [illegible] [illegible] [illegible] [illegible] [illegible]
[illegible] [illegible] [illegible] [illegible]

[illegible] A native man who is impotent in very much looked down on and he is the laughing stock of the village. He is constantly made fun of by the women. The story goes that such a man when being challed, said, "All right, let me have the prettiest girl in the village," and they said, "All right, old rompsie, you can do her no harm." But it seems to pass that she became pregnant and the women were disgusted. The meaning of the expression is: what is done as a joke may become a reality.

[illegible] [illegible] [illegible] [illegible] [illegible]
[illegible] [illegible] [illegible] [illegible]

There are more days than there are holes in an animal's coat! If A has done a good turn to B, and B behaves badly to A, A will remonstrate, using the above expression, meaning, "You may want my help again some day, but I shall then refuse and you will suffer."

[illegible] [illegible] [illegible] [illegible]
[illegible] [illegible] [illegible] [illegible]

Meaning, "You never know when you may want return for your good deeds.

[illegible] [illegible] [illegible] [illegible] [illegible] [illegible]
[illegible] [illegible] [illegible] [illegible] [illegible] [illegible]

Kwiinda = to rub the back of another person while bathing, a thing a native appreciates very much. An expression often used with the meaning, "There is safety in numbers," ([illegible])

[illegible] [illegible] [illegible]
[illegible] [illegible] [illegible] [illegible]

Kwiinga = to be poor, to be in trouble. Do not give up hope.

[illegible] [illegible] [illegible] [illegible]
[illegible] [illegible] [illegible] [illegible] [illegible]

Meaning: "Though you are prosperous at the moment, do not make a show; all these things may pass away quickly," or *Kwabiba ebwinjiwapile pano!* "One should not rejoice speedily."

38. *Fulle [illegible] [illegible] [illegible] [illegible]*
They have eaten remains fruit on the head!

The intimate of a household who betrays the friendship of the husband by culpable intimacy with his wife is said "to eat remains fruit with the wife over the head of the husband." (Cf. French, *faire cornes.*)

39. *Ifyanto na kwakiba nangulwane kwakiba n'ewaw!*
The arrow he is watching, it does not take long to reach the eye!

A man who looks on and does not take steps to stop an ill at the beginning will suffer heavily in the end.

40. *Wanyamwanyage [illegible]!*
You kept me holding a stone!

You are late in your appointment; you have kept me waiting.

41. *Lakula yabwanda ubingi (or ubwakula) [illegible]!*
The jackal when he swallows ubingi fruit is confident; (or a jackal learns to eat and the seeds of this fruit).

Lakulilile has the sense of when jumping over a stream, the jumper is sure of landing on the opposite bank. The expression used of a man means that he feels pretty sure to get through with what he is doing. (Note: Some in contradistinction to jackals are said to eat remains but always to expel the seeds from the mouth, as the seeds are sharp-pointed and very irritating. I have myself seen a man die from perforation of the bowel by these seeds.)

42. *Lihwani! [illegible] [illegible] [illegible]!*
(He has) remaining remaining of the last!

Reference is made here to the habits of the bat, which often makes a meal of figs and then flying to other trees, leaves its droppings under them also so that one might take them to be fig trees, too. The saying refers to a man who manages to involve a lot of others in his own trouble.

43. *Mapatan [illegible] [illegible]!*
The mouth-scrapers they (people) admire (his) footprints!

The *mapatan* is a small animal whose footprints may be seen all over the gardens in the morning, but seldom the animal itself. The meaning of the saying is, "If you are going to steal, it does not matter if you leave your footprints, but do not hang about and get caught!"

44. *Kilondo chamar [illegible] [illegible]!*
Mr Lilondo-Do-Well they on him hanged the scrotum!

534 Well meaning people often get into trouble! This refers to a story of a man who had a great friend in another village who died. Hearing he was dead, he went to the village and found all the relatives mourning the dead man. To show his friendship, he commenced wailing and went into the house and lay down by the corpse among the chief mourners, though not one of them, here, he fell asleep. While asleep, evil spirits (*ancestral spirits*) came and cut open the corpse and removing the liver, they took out the entrails and hung them about the sleeping man's neck, and smeared his hands with blood. In the morning, the mourners found the man in this condition and to avenge what they supposed to be his desecration of their dead, they killed him. The interpretation put upon this story and the meaning of the saying is that " however well intentioned you may be, you should not transgress custom."

36. *Ngulu ja Akhonde ulu ukhwali*
The foot of strangers long tail!

A newcomer in the food-yard is pushed out by the other fowls and if it had a long tail, this would be noticed. In the same way, " If you are a stranger in a place, anything you do will be remarked, therefore your conduct should be exemplary."

36. *Ulumbulu ungaje ga Ulubulu!*
Do not scare me with the movement of Ulubulu!

This is a woman's saying, meaning, " I don't want to be dragged into your quarrel!" Ulubulu is an interesting word. It is a girl's name and as Polly is used in English in speaking to any girl child whose name you do not know: " Come here, Polly, and show me the parent's house." For Tommy used in the same way, the Tiv says *Wanyanya*.

37. *Ukhwa ukuyinda ewuni!*
The hen hatches its dusk in a neighbour!

Ukhwa is a small flat basket with ornamental rim. The meaning of the phrase is " man's neighbours are not always disinterested."

38. *Ajimola wumbulubi!*
He has stolen eggs!

This is an expressive word of anyone who has triumph. It is said that he is so surprised at being thus accused that the triumph stops.

39. *Awuuli, ukhwangunga ugula ukhwali ka ugwanu!*
You girl, (wife) expectation be burnt (throwing to the back!

In a native house, the man and woman lie side by side on a mat between the fire and last wall, the man next the fire, facing it when sleeping. When he wishes to enjoy conjugal relations, he turns towards the woman and lies on his side with his back to the fire. The saying refers to the amorous husband whose advances are refused by his wife, but he pacifies until his back is blistered by the heat of the fire. The saying indicates that it is no good going on wanting a thing refused you; you only suffer for it.

539

(6) [illegible] [illegible] [illegible]!
Lying on the mat, [illegible]!

This is a slang expression which in full would read, "It is nice and warm lying on a mat in the sun, but it is not so comfortable as being in bed in company with your wife; you may go on waiting but you won't get anything." This might even be said to a dog, wishing on a dog will, every morsel of food lifted to the master's mouth.

(7) [illegible] [illegible] [illegible]!
The [illegible] of water has [illegible]!

[515] [516]

It is a custom before lying down to sleep on the floor mat, to take it up and pour both leg water on the earth floor to kill any blood-sucking mosquito (Culex fatigans, Anopheles maculipennis). If you see a girl washing on the fire, you naturally think there is food being prepared but you may be disappointed. It may only be the girl for heating the water to kill the mosquito. The saying is then used to a man who has made an enquiries and is disappointed but gives no reading.

(8) [illegible] [illegible]!
The [illegible] [illegible]!

[525]

The [illegible] is described by natives as going up to what it will see, remaining quiet for some moments, and then suddenly taking a bite. This is said of a man who comes up to you smiling and then bite you a hard blow.

5%

Among the Tiv as among other tribes that I have previously mentioned, signs of salutation to a superior are made by clapping the hands or putting the hands on foreheads with one hand, at the same time remaining down. A woman will go off the path and bend, looking away from a superior passing along the roadway.

A person going by the door of a hut where others are sitting, will say "Kwanlanga [illegible]! At the door here." Passing behind anyone, he will say "Ka-ungu 'ma! At the back!" Meeting anyone on a path, a man will simply say, "Iden, hero," adding perhaps, "Ka-shelu! all is well?" A child or brethren on returning to his village after a journey, is greeted by the women with trilling of the tongue (Ka-kelele).

[525]

Men and wife do not greet each other in the morning. The wife then fetch and draws water and places it in the hut for the husband's use but nothing may be said.

When a visitor is entertained and a chicken cooked for a repast, the "pope's cream" is always for the visitor. The right hand only is used in dipping into the common pot. A man of small importance, though explain, will go on making pretence of eating at a common meal by taking very small morsels so that his superior shall finish first, and then need go away before him.

I may here add the words used by the Tiv for the sounds made by various animals; they are interesting to compare with those of other languages:

[10]

* "Notes on some tribes of British Central Africa," op. cit., p. [illegible].

[illegible]

The dog	[illegible]
The cat	[illegible]
The cock	[illegible]
The hen	[illegible]
The duck	[illegible]
The ass	[illegible]
The sheep	[illegible]
The goat	[illegible]
The dove	[illegible]
The fowl	[illegible]

[illegible] Among the Ewe, abuse and obscene language are rare; expressions which appear in other languages all the world over are only used on great provocation and commonly with the results. This, too, is opposed to the ways of neighboring tribes, the Anyanja and Angoni, who freely make use of such expressions as "*Ngini go mulal!*" and "*Ulungu wa mulal!*" "The pudenda of your mother! Clitoris of your mother!"

The following exclamations of abuse and expressions of obscenity will be seen to follow very closely upon those in other countries.

1. *Wuvividzeni!* (to a girl or woman), *wuhidzi!* (to a boy or man) means you are a person who has not been to your Dagaga, and therefore "you are without manners!"

2. *Wuvuvu wilungwu!* as expression to a child meaning "you little wretch," "you nasty little thing!"

3. *Ahidzin ami figoni!* he sees with the back of his head, he is undiscriminated, i.e. "he is a dirty person!"

4. *A* man with big eyes is hailed "look at your eyes like a lemur!" (*Lidzondzo*, lemur).

A Ewe woman seldom or never swears at or uses bad language to a man and the converse; the woman, however, is not behindhand in the art of bitter complaining and nagging.

[illegible] Pulling down the lower eyelid with the finger accompanying some exclamation has exactly the same significance as in European countries, "I am not as green as I look!"

Ku-wuya is to make a sound like "pish" with the mouth, and is a great insult, for which a man will fight.

Screwing of the lips to one side as in the action to get rid of the sour skin of a fruit, *ku-wuse'g'wuya* is an expression of contemptuous disgust.

[illegible] The similarity to European ways is again seen in swearing or taking oath. A Ewe swears by the spirits of his ancestors or by a chief:

"*Christ ehe Mulungu!*"
"(By) the grave of Mulungu!"

or he may indirectly name some ancestor:

"*Kpakondzie kpongu!*" or "*Kpakondzie kondzu!*"
"I swear by the spear!" "I swear by the foot!"

GB5
S39

swearing I swear by the spirits of him who was killed with a spear (or by a lion), referring to some one well known to have in such wise met his end, or again:

"Ejakulolo kwada kwa mwalu"
"I swear by the fetish of (all) men!"

an equivalent to swearing by the day of judgment; or again a man may swear by his own death:

"Lilolo lingatiyile a'mapakwalu"
"Death may it enter (my) mouth!"

or he will intimate that his throat should be cut by drawing his finger across the neck, if he does not speak the truth.

There is a glee around Ewoiba in swearing. A man saying, "I swear as sure as," is asked, "By whose grave-house? Kiani ne ahoni?" The man who is in reality only bluffing will say, "Chokoma! By Chokoma's grave!" Chokoma a small hamlet near Ewoiba of whose much fun is made.

Native stories. The fables or stories found among the Ewoiba Tsu are many of them S39
variations of well known tales, and have been collected to some extent by others. I only propose to add here two translations of a few I do not remember to have read elsewhere.

The Hare and the Elephant

The elephant made a big garden and planted sugar-cane. When it had grown, he asked all the other animals to come and partake of it with him. When they had all assembled, the buffalo, the eland, and all the other antelopes, the zebra and all the smaller animals, the elephant invited them to eat. He made one condition, however, anyone who, having chewed the sugar-cane, made a cracking sound as he swallowed the juice before spitting out the fibrous part would be killed (*ba-jaapa*, Chin. *ba-pwada*, in each, making the sound "ahkah").

So the animals all sat in a long line and the buffalo started chewing his piece of sugar-cane, but when he tried to get all the juice out of his piece, he went "ahkah!" so the elephant twisted his head till he was dead, and then picking him up, threw the carcass aside. The same fate followed for the eland, for all the antelopes and the lion, so that the other animals became afraid and would not volunteer to eat the sugar-cane but went away and the carcasses of the dead animals were buried. The elephant then appointed another day and invited the animals to come again and try.

That day, the hare came and made salutation by stepping to the elephant who demanded what he wanted, so the hare replied, "I have come to eat sugar-cane." "You know my rule," said the elephant. "Yes," said the hare, "I know your rule but I want some sugar-cane." So he was given some while all the other animals looked on to see what would happen. "Please," said the hare to the elephant, "may I have the outside part stripped

3: Stanmus D-5 (ca. 1912) 1922 FT7 Yao FT7

539 off, as I have not got strong teeth?" This was done for him and he started munching some pieces of sugar-cane as he sat on a stone with the rest of the cane beside him, while the elephant watched. "Did you kill the buffalo just for saying 'schloch'?" said the hare, as he sucked the juice from the fibre. "Yes," answered the elephant. The hare pondered awhile as he chewed up some more cane. "Did you kill the eland for saying 'schloch'?" again asked the hare. "Yes," answered the elephant, as the hare each time spat out the sucked-dry fibre. With each mouthful the hare asked about another animal until he had finished all his sugar-cane.

Thus the elephant, seeing that the hare had finished and had not once made a sucking noise as he swallowed the juice, said, "You are a wonderful animal" and he gave him half his garden and they have been friends ever since.

This is one of the many stories illustrating the hare's supposed cleverness and cunning.

The Hawk and the Cock

How the birds of prey came to revenge the fowls

At one time, all the eagles and hawks used to be afraid of fowls. The cock inspired them with awe; they thought with his crest of red horns, he must be very dangerous. One day after talking it over, they decided to send their little brother, the Katotola (the smallest of the hawks) to investigate matters. So Katotola flew down to the earth as an ambassador of peace to interview the cock who was strutting about with his family. He explained to the cock that the eagle, Kapungu, their king, wished to be on friendly terms with the cock but that they were afraid of his crown of red horns. The cock answered that it was not made of horn but was quite soft; "Come and feel it," said he, "it is nothing to be afraid of." Katotola was frightened, but when the cock repeated the invitation, Katotola did so. He was surprised to find it soft and evidently nothing to be afraid of. The cock accepted the eagle's message of friendliness, so Katotola said good-bye and prepared to fly away. Just then, he spied one of the cock's daughters and no longer being afraid, he darted down and picked her up and bore her away to the presence of the eagle to whom he related how the cock was nobody to be frightened of, saying, "See here, I have carried off one of his daughters." So all the eagles and hawks saw that the fowls and their cock were a weak tribe and they could easily make war on them and carry off their children.

The Pig and the Baboon

How once friends, they parted, the baboon staying on the tops of the hills, the pig going down into the plains

Long ago, the pig and the baboon used to live together on the hill-sides. One day, it was very cold and a cutting wind was blowing. As the pig and the baboon sat on a rock in the sun trying to get warm, the baboon turned to the pig and said, "This wind is enough

3:Stannus D-5 (ca. 1912) 1922 FT7 Yao FT7

to wear the end of one's nose to a blunt point." "Yes," answered the pig, "it's really enough to blow the hairs off one's buttocks and leave a bare, dry patch." "Look here," said the baboon getting cross, "you are not to make personal remarks"! "I did nothing of the kind," retorted the pig, "but you were rude to me first." This started a quarrel and they came to the conclusion that neither cared for the other's company. So they parted and the baboon went up on to the rocky top of the hill, while the pig went down to the plains.

539

The Cock and the Crocodile

"Kokolikoi! Cha Ngoma ambuanga!"

"Cock-a-doodle-do, the crocodile is my friend!"

When the reptiles heard the cock giving voice, one morning, they were much annoyed, saying, "What is the cock that he takes in vain the name of our King!" and they made a case about it, and all the birds and reptiles came to attend the case, and the crocodile and the cock were also present.

After the reptiles had made their charge against the cock, the eagle Kapungu, king of the birds, spoke, saying, "This is a matter of clan relationship. Can the cock claim the crocodile as his *ambuanga*? What is the crocodile? What is the cock? We must get to the bottom of the question. Is it not from an egg that each comes?" To which the crocodile answered, "You speak truly but we had never thought of it before; we are friends," and then he swore that inasmuch as men killed his brother the cock, he would kill men, and from that day to this, he is man's enemy.

NOTE: This is an interesting story with its reference to clan relationship. The native seems to forget, however, that a crocodile will devour fowls along with most other things, including his own brother.

The Tortoise and the Baboon

Why the baboon has no tail

Once upon a time, the tortoise made friends with the eagle and invited him to come and pay a visit. So one day the eagle alighted at the tortoise's home and was there entertained and fed. When leaving, he asked the tortoise to return the call but the tortoise having explained that he could never walk to the eagle's place of abode, it was decided that the eagle should then and there carry him. So the tortoise asked the eagle to wait for a few minutes and he went into his house and got a bag. Into the bag the tortoise crept, asking the eagle to fasten up the bag and tie it to his leg and thus fly with him to his home. Arrived there, the eagle gave his guest fish to eat and the next day when the tortoise wished to leave, he received some fish to take with him. This was put in the bag fastened up with a long piece of string, the other end of which the tortoise tied round his neck. Saying good-

3: Stanzas D-5 (ca. 1912) 1922 FT7 Yao FT7

539 bye to the eagle he asked him to toss him down from the tree so that he could reach the ground and walk home. On reaching the ground, he started off for home with the bag trailing by the string behind him. On the way, he met some baboons, one of whom seeing the bag ran and took it, saying it was his find and belonged to him. The tortoise naturally argued the point and they decided to go to the elephant to have the dispute settled. After hearing the evidence of both sides, the elephant gave his verdict in favor of the baboon. "The baboon had found the bag and therefore it must belong to him. If it had belonged to the tortoise, he would have been carrying it on his shoulders." So the tortoise had to go home without his bag of fish. After a few days, he thought out a plan of revenge. Going to a place where he knew the baboons often met, he dug a hole under a stone and getting into the hole, he lay in wait. Presently the baboons arrived and one came to sit on the stone. Creeping out of his hole, the tortoise laid hold of the baboon's tail, calling out, "I have found a *ukhoti* (whip)." The baboon immediately replied that it was his tail. "No," said the tortoise, "I have found it trailing on the ground. Finding is keeping; anyway we will go to the elephant about it." So they went again to the elephant who upheld the tortoise, and ordered the baboon to cut off his tail and so the baboon lost his tail.

The Snake and the Partridge

Once upon a time, there was a partridge who lived in the grass on the plain. One day a bush fire spread towards the place where he was feeding and he decided that he must fly to a place of safety. As he was taking his little run preparing to fly, a snake called to him, saying, "I can find no hole to get into and I am afraid I shall be burnt. Let me coil myself about your neck and you could thus carry me to a spot which is already burnt." The partridge agreed and with the snake wound round his neck, he flew away and alighted on a place over which the fire had already passed. "Now," said he, "would you mind unwinding yourself from my neck?" But the snake answered, "What am I going to eat here in this burnt place?" and tightening his coils, he strangled the partridge.

There is a saying apropos of this story:

"Ndende 'shemene wendeje ungwende!"
"I may do well killed partridge!"

and one in Chinyanja:

"Ubwino wanga ukwende!"
"Kindness killed the partridge!"

Ndende 'shemene and *ubwino* have the meaning "the wish to do a kindness; Misplaced kindness is fraught with danger!"

The Hare, the Leopard, and the Bushbuck

Once upon a time, a man hoed his garden and planted it with beans. When the crop grew, he was much troubled by the animals from the forest which came and damaged his

3:Stannus D-5 (ca. 1912) 1922 FT? Yao FT?

539

beans, so he set a snare to catch them by the leg. One day, a leopard came that way and got caught in the trap. After a time as he lay there unable to move, he spied a bushbuck with his mate and four young ones and called to him to come and help him. The bushbuck, when he saw the leopard in the trap, took pity on him and undoing the rope, set him free. Said the leopard, "I have been here three days and am famished. You have been very kind to me. Will you extend your kindness and take me to your home and give me food? I am very much indebted to you, and to show my gratitude, I will remain with you." So the bushbuck assented and led the leopard to his home where beans were cooked and put before the leopard to satisfy his hunger. But the leopard refused them, saying that he did not eat beans. So some fowls were killed and cooked and given to him to eat. Every day he was given fowls to eat until none were left and the same thing happened with the grain. So when there was no more flesh for the leopard's food, they cooked some beans for him. Then the leopard again explained how greatly he was indebted to his benefactor, the bushbuck, and that he would like to show his gratitude by staying with him but that he really could not eat beans and asked the bushbuck to give him one of his children. The bushbuck did not like to refuse, so one of his little ones was killed and given to the leopard who ate him. Next day, the leopard asked for and received another child and so on until all had been sacrificed and only the bushbuck and his wife remained. The leopard demanded the wife and the poor bushbuck, not knowing how to get out of it, had to give the leopard his own wife to be eaten. When the leopard again felt hunger, he said to the bushbuck, "Well, now you have been very kind to me and given me all you have but you still remain. I think I will have to eat you, too." But the bushbuck being now really frightened, made off into the forest chased by the leopard. After running for three days, the bushbuck met a buffalo who asked him, "Why are you running so fast with a leopard running after you?" So the whole story was told and the buffalo's advice asked in the matter, to which he answered, "Well I don't think that you can do anything except continue your kindness and give yourself up to the leopard." But the bushbuck ran on again and meeting the elephant the same question was put to the bushbuck and in answer to the story, he received the same advice as the buffalo had given. So with nearly all the animals of the forest until he met the hare who, after listening to the bushbuck's story, offered to act as judge in the case. So when the leopard came up, the hare told him he would like to see how the whole thing had come about from the moment he got caught in the trap. All then repaired to the place where the snare was. "Now," said the hare setting the trap, "will you just show me how you got caught? Of course if you are trapped, I will free you again." So the leopard stepped on the trap and was immediately caught by the leg. "Ah," said the hare, "that is the way it happened, is it?" with which he went off, taking the bushbuck with him, leaving the leopard now to die of hunger. Later, some one came along and finding the leopard in the snare, killed him.

3: Stanzas D-5 (ca. 1912) 1922 FT7 Yao FT7

The Hare and the Hyaenas

539 Once upon a time, a hare went to seek work with a lion and agreed to attend to the drying of the meat the lion killed. One day, when the lion was away hunting and the hare was busy attending to his work of drying the meat, some hyaenas came by and seeing the meat asked the hare to give them some, but the hare refused, saying it was not his own but belonged to the lion his master. So the hyaenas just went and took and ate of the meat, and made off. This went on every day and the hare becoming much distressed about it, decided to try and trap the hyaenas, so he dug a game-pit and having put pointed stakes in the bottom, he covered it up with grass. In the afternoon, he went out for the daily supply of firewood, and on his return he was dismayed to find that the lion, his master, had fallen into the game-pit and been killed. After this, he abandoned the pit and thought of another idea to defeat the hyaenas and avenge the death of his master. He got the lion out of the pit and carefully removing the skin, he dried it and stuffed it with grass and fixed up the stuffed body in the forest close by, and attaching one end of a rope about its neck, he carried the other end to the place near by, where he went on with his work of drying meat. Presently the hyaenas came along and as usual asked for meat. The hare this day invited them to come and take what they wanted. Pretending to be friendly, the hare remarked how well one of them would look with a nice piece of rope tied round his neck, like a necklace, and the hyaena's vanity being touched, he allowed the hare to fasten the rope round his neck. Now this was the rope to the other end of which was attached the stuffed lion, and when the next moment, the hare called out that the lion was coming back and the hyaenas started to run away, they found that the lion followed them. Wherever they stopped to get breath, there he was still on their tracks, so they decided to run for a hole they knew where they could hide from the lion. After they had been in the hole sometime, one of them peeped out, but there was the lion waiting at the mouth of the hole. Day by day they got more hungry but every time they peeped out, they always saw the lion waiting for them, and so it happened that they grew weaker and weaker and eventually died of starvation.

The Hare, the Elephant, and the Hippopotamus

The hare challenged the elephant to a tug-of-war, the understanding being that if the elephant pulled the hare over, the hare would pay, but that if he did not succeed in pulling the hare over, then the hare should receive the wager. To this the elephant agreed, and away went the hare to the hippopotamus and made a similar proposal to which the hippo in turn assented. On the day appointed for the contest, the hare handed one end of a long rope to the elephant and arranged with him that he, the hare, should signal a blast on a horn when they were to begin pulling, the second blast to be the signal for the end of the contest. The hare then trotted off with the other end of the rope and found the hippo,

3: Stannus D-5 , (ca. 1912) 1922 FT7 Yao FT7

with whom he made a similar arrangement. Then, taking up a position midway, he blew on the horn and the elephant and the hippo started pulling against each other, each ignorant of his opponent. Neither could pull the other over, for they were both equally strong. So the hare blew a second blast on his horn, and going to the elephant received the acknowledgment of his defeat and the wager, after which he went to the hippo who was also defeated, and so received his second wager. 539

The Story of the Dzimwe

Once upon a time there was a woman and she was with child. One day she wanted some meat to eat and asked the Dzimwe to give her some. The Dzimwe agreed to give her some meat if she would give him her child when it was born. To this the woman assented and received the meat. In due course the child was born but the woman thought no more about the Dzimwe until one day she met him and was reminded of her promise. So the woman arranged with Dzimwe to send her child to the garden to gather pumpkins so that he could catch him. The child's name was Kalikalanje which means "he who frys himself in a pan." The Dzimwe went down to the garden, changed himself into a pumpkin, and waited for the boy's coming. Presently Kalikalanje arrived and looking at the pumpkins, said, "I only gather one that dances," so the Dzimwe in the form of a pumpkin started dancing about and the boy ran away calling out, "No! really I don't gather pumpkins that dance." A few days later, the Dzimwe sought out the woman and related how he had been duped, so the woman proposed to tie the Dzimwe up in a bundle of grass in the forest which she would then send her son out to get. Kalikalanje, sent out by his mother for a bundle of grass, came across the bundle containing the Dzimwe, and remarked that he only took bundles of grass that danced. And when the bundle started dancing, the boy ran away, calling out that he did not really take bundles of grass that danced. So the Dzimwe a second time was frustrated. Again he went to the boy's mother and asked her, saying, "You promised me the child, you must make some other plan to deliver the boy into my hands." This time she hit upon the idea of sending the boy to another village to play *nienge* (a kind of game of nine-pins), and told Dzimwe that he would be able to recognise her son as she would shave his head and give him a piece of red cloth to wear. So Kalikalanje went to play *nienge* with the boys in another village, but arriving early, he got them all to shave their heads and tearing up his piece of red cloth, he gave each boy a piece to wear. When the Dzimwe arrived, he was again baffled as he did not know which was the boy he ought to have. Once more he met the woman and explained how her plan had miscarried, so she suggested that she should send her son out hunting in the forest and the Dzimwe could catch him there. So the youth went out hunting and he took his four dogs with him, including his dog, Mawalayenje. As he went through the forest, he suddenly came upon the Dzimwe, so he climbed up a tree. "Ah," said the Dzimwe, "I have got you at last!" and commenced to cut down the tree. Then Kalikalanje called to one of his

3: Stanmus D-5 (ca. 1912) 1922 FT7 Yao FT7

539 dogs to attack the Dzimwe and the dog rushed in at him but fell dead, killed by the wind passed from the bowel of the Dzimwe. The same fate fell to two more dogs. Then Kalikalanje called his dog, Mawalanyenje to attack the Dzimwe. Mawalanyenje flew at the Dzimwe, making wind at the same time as his enemy, and was unhurt. He bit and bit at the Dzimwe till he killed him. Then Kalikalanje came down from the tree and got medicine and his three dead dogs were brought to life again, and he was not molested further.

[114] NOTE. This story is only an incomplete form is given by Hind in his *First Yao Reader* and I have therefore thought it worth while repeating it *in extenso*. Miss Werner[1] has referred to Dzimwe but seems very doubtful of the meaning of the word. It occurs only in the story given above, common to both Wayao and Anyanja, and simply refers to a fabulous personality, one of whose attributes was the ability to change into various forms. Scott in his dictionary,[2] mentions a Chinyanja word, *Dzimwe*, an elephant, so called because of its large belly filled with masses of unchewed food.

NALUMBALAPA, THE NIGHT-JAR

One day when the night-jar was strolling along, he met some guinea-fowls and approaching their leader, he said, "I envy you when I see you going along accompanied by many of your people. I should be very glad if you would help me by giving me medicine to make me also a chief among others." So the guinea-fowl said, "That is all right, but you must come at the proper time when I am at home." In the evening, the night-jar went to the guinea-fowl and the guinea-fowl gave him some medicine and told him, "Take this medicine. You must then get some animals' dung and mix the medicine with a basketful of it. Choose a nice site and sprinkle it all over with this. Then build your own hut there. The rules about this medicine are as follows: If any people come to stay with you and do any damage to your crops, don't abuse them; speak gently." "All right," said the night-jar, and went away to follow out the instructions. When this was all done, one evening some one came and clapping hands at the door, called to the owner. The night-jar went outside and found a man with his wife and children. They had come to settle down with him. (He was going to be a chief among men!) So he told them to come in. After a few minutes, others came, and then all night others arrived until the house was full and others camped outside. Within two days, there was a big village. Then the night-jar went back and reported to the guinea-fowl. The guinea-fowl again bade him keep to the rules. Then the people made a big garden for the night-jar and planted cassava and many other things and they were all quite happy. One day, all the people came together and said they were going to make a bigger garden for their chief, the night-jar. The children went too, and played in one of the cassava gardens. One of them dug up some roots and chewed them and the night-jar passing and noticing this, was very cross and began abusing the children and their

[1] British Central Africa, p. 333. [2] Op. cit., p. 138.

3: Stanton D-5 (ca. 1912) 1922 FT7 Yao FT7

mothers. When they heard the drum, everybody stopped hoeing, put their hoes on their shoulders and with their wives and children went away, till no one was left in the village, except the night-jar and his wife. "I don't know what I am going to do. I must run to the guinea-fowl and see if he can put this affair right," said he. He reported to the guinea-fowl all that had happened. Then the guinea-fowl said, "You have broken the rules. It is too late; it is finished and I cannot give you medicine to call them back. It is your own fault." The night-jar said, "I think you can help me. Give me medicine to make me invisible. If you do not, the people may come back and kill me." "For that I will give you medicine," said the guinea-fowl. "Now, after you and your wife rub yourselves with the medicine, as you sit together a man can walk past you and not see you." So they got the medicine and went home and used it. And that is why you cannot see the night-jar now as he sits on the road when you pass.

539

The Story of the Hornbill (Lipomombo)

Once upon a time, there was a man named Lipomombo. He lived in a village but would not conform to the customs of the people. This the people did not like. Especially did they take exception to his refusal to attend the last rites for the dead. Once again he was asked to pay homage to the dead and accompany the funeral procession of a fellow villager to the grave, but he refused as usual. Soon after, his own child died, but no one came to offer help in preparing the body or in carrying it to the burial ground. Not knowing what to do, he tied the body up and put it upon his head and so left the house to search for the burial place. "*Ku malembe kuni?* Where are the graves?" he asked the first man he met. "I don't know," was the reply. He wandered on, putting the same question: "*Ku malembe kuni, kuni, kuni?*" to everyone he met but no one apparently knew. So he wandered on until the body became rotten and ran down his nose and dripped off the end. He has been wandering ever since with the last piece stuck on his nose, always searching for the graveyard and asking "*Ku malembe kuni, kuni, kuni?*" and all his descendants do the same.

Moral: Conform to the customs of your race. (Note the beak of the Hornbill and its call.)

The Story of the Young Man Trying the Advice Given to Him by His Father

There was once an old man and he was dying, so he called his son to him and said, "I am dying, but before I go, there are three things I wish you to beware of doing: *Firstly*, do not tell your wife your private affairs; *secondly*, do not make friends with a policeman; *thirdly*, do not borrow money from a poor man but from a rich man." Having uttered these warnings, the old man died. No sooner was the burial over than the son thought over his father's words and doubting to try and see whether there was wisdom in them, he went along to a poor man he knew and borrowed sixpence and to a rich man and bor-

3:Stanmus D-5 (ca. 1912) 1922 FT7 Yao FT7

539 roved a sovereign and thence home. Saying nothing about the money, he left his house the following morning and bought a goat. Waiting in the bush till dark, he killed it and then bound up the carcass in some grass and carried it to his hut. Arrived there, he cautiously told his wife he had killed a man and wanted to bury the corpse which he had brought with him, under the floor of the hut. So the woman brought a hoe and together they dug a hole in the middle of the floor and having deposited the body in it, the earth was filled in and the woman replastered the floor with mud, and made her cooking fire over the spot. "Now," said the young man to himself, "my father told me not to tell my wife any of my private affairs and not to borrow money from a poor man. Both these I have done. One thing remains; I must find a policeman to make friends with." Going out, he met two policemen, so he said to one of them, "I should like to be friends with you, come to my house"; and the policeman agreed and went with the man to his house and a fowl was killed for them to eat. He introduced the policeman to his wife as his friend and she started cooking porridge. When it was ready, she brought it outside to the two men who were sitting on the veranda of the house with water to wash their hands and they commenced eating. Then the man called his wife back, saying the porridge was not well cooked — "It is only fit for dogs!" — and struck his wife a blow. The woman immediately appealed to the policeman to protect her, saying her husband would kill her as he had killed a man, a short time before. So the policeman arrested the man and took him away to the magistrate. The magistrate sent the police back with the man to the village to find the body of the murdered man. Its resting place was pointed out by the woman and after digging, they found the body tied up in the grass. All said, "It is just as the woman stated!" and they began striking the man and made him carry the body back to the magistrate. On the way, they met the poor man, who on seeing his debtor cried out, "Where are you going, where is my sixpence?" "I am going to the magistrate. I am supposed to have murdered a man," he replied. "Where is my sixpence? You will get hanged and I shall be the loser!" yelled the poor man. "Wait a bit, I may not be killed," said the man, "I may be able to pay you back presently." "No you won't, you will be hanged," was the reply and the poor man hit him as he passed. Later, the party met the rich man and the accused called to him, "I am in trouble and don't know when I may be able to repay you your loan"; but the rich man answered, saying, "Never mind about that now. I am sorry you are in trouble." When they came before the magistrate and the man put down his load, it was opened and the body of the goat disclosed. Then the magistrate asked the man what it was all about. So the man related his story, telling the magistrate how he had wanted to test his father's advice, and how it had all proved to be good advice.

Note: The story as given here is doubtless an adaptation of an older story to present day conditions. I have not been able to get any more original form.

3: Stanmus D-5 (ca. 1912) 1922 FT7 Yao FT7

About the Gremmy Man (Jua Mluhe Juakusukuwa)

Once upon a time, there was a man and he went and set a trap and caught an *mbetulu* (genet cat). So he brought it back to his home and singed the fur off and partly roasted it, and then hung it up from the roof inside his hut without telling his wife to cook it. It was in the summer time. One day his wife said, "I am tired of gathering herbs to cook for your relish. What about the animal hanging up there? Shall I not cook it?" The husband replied that not for anything would he have it cooked. "I am going to keep it till we get our new crops in," he said. So the woman said nothing and time passed and the little animal got as dry as a bone. One day when the man and the woman had gone to hoe in their garden, the *mbendu* came to life again and jumping down, found the basket where the woman kept her clothes and beads; opening it, he took them out and dressed up in them. Thus arrayed he went out of the hut and came to the place where some women were pounding grain; so he began to sing and danced to them. His song was:

"*Achambumbu'we bitawe'lo mini jose lache lache, mbui! jukutu! jukutu!*"
"The women (who were) pounding there pounding sticks all they have left!"

and he told the women to sing the chorus "*Nanchalamanda!*" (*Mbui* is the word used to indicate the sound and action of a short hop on both feet like a bird or some steps in a dance. *Jukutu* similarly has reference to the movements of the buttocks in dancing. *Nanchalamanda* means "very dry," referring to the *mbendu* and the treatment he had suffered.) So they all danced together, but when he judged the people would be going back to the house, he escaped and ran back to the house and putting away the clothes and beads in the basket, he went back to his position hanging from the roof. This went on for several days and many of the boys and girls in the village used to go to the pounding place to see *mbendu* dance. One day the child of the man who had caught the *mbendu* recognized the cloth he was wearing as belonging to his mother and noticed him go back to their house. So he went and told his mother and father who, when they looked into the basket, noticed that the things inside had been disarranged and that the cloth was dirty. So they said they must find out what was going on, and next day, pretending to go to their garden, they hid themselves. Presently *mbendu* came down, put on the cloth and beads and went out of the house to dance as usual. When the man and his wife appeared, he ran away to the house, threw off the cloth and hung himself up to the roof, but he had not quite shrivelled up dry again when they came in and discovered him. When *mbendu* saw that he was found out, he jumped down and ran away, this time quite free into the fields, so the woman reviled her husband for saving up the animal in greedy fashion so long.

Note: When telling these and other stories, there is a regular formula with which the narrator prefaces his discourse. The story-teller begins:

3: Stannus D-5 (ca. 1912) 1922 FT7 Yao FT7

539 "*Lokete lokete kwada ta!*"
"Picking up picking up a little basket full!"

to which the listeners exclaim

"*Lokotsa!*"
"Overflows!"

At the completion of each sentence in the story, one of his listeners will exclaim, "Go!" When he has finished his story, he says,

"*Ajobola kutola kutahumunga pamtoo pahomoro, undo chipenjil*"
"Take off the fire, the little mouse lest it be singed, by the head it is very hard, the hair (is) in a lump!"

During the intervals of a long story, one of the listeners may break in and sing some little song, such as the song of the *nkonde* in the story of the greedy man, thus giving the story-teller a rest.

342 The house and household utensils. The Yao house does not differ greatly from the Nyanja habitation which I have already described elsewhere.[1] The accompanying figure (Pl. XIV, fig. 15) gives the circular plan of a hut with a veranda partly open and partly enclosed to form a room. The central pole of the hut is indicated, the hearth (H), the position of the sleeping mats (M), and the place where the water pots are kept (P). The 352 bed may be a bamboo platform supported by forked sticks a foot above the ground (*usangwali*), or a dais of mud, over which is spread the sleeping-mat, *upese*. (Pl. XIV, fig. 14.) Seats, *chilengu*, are made of logs of wood with conveniently placed branches acting as legs. I have seen a symmetrically carved log with shaped legs all in one piece, which suggested by its form and by the presence of a button on the midline of the under surface that it was made in the imitation of an animal. Plank seats with peg legs are now sometimes seen. Wooden pegs are driven into the wall and serve to hang odd articles upon.

[359] The hearth is simply a shallow depression in the mud floor, around which are placed three large stones to support the cooking pots. Sometimes a canopy is built over the hearth, consisting of four upright poles supporting a platform made of reeds and grass, upon which millet and other seed grains are often stored. From this platform *liguhu* (*tsanja*, [251] Chin.), the gourd containing the supply of salt is often hung. The seed grain tied up in little bundles is suspended from the *liguhu* where it becomes very dry and smoked, without any ill effect to the next year's crop. (Pl. XIV, fig. 16.) Four pronged branches of trees are often stuck in the ground with a string tied around the prongs, and used as holders for gourds, salt bottles, etc.; this device is called *lipanda* (*phanda*, Chin.). (Pl. XIV, fig. 10.) 415 The smaller utensils include the porridge stirring stick *mtiko* (Yao and Chin.) (Pl. XIV, fig. 12), several wooden spoons *chikowi* (*chipanda* or *nanalowa*, Chin.), (Pl. XIV, figs. 11, 13), a number of gourds of various shapes and sizes used as ladles and drinking vessels,

[1] 'Notes on some tribes of British Central Africa,' op. cit., p. 326-328.

3: Stannus D-5 (ca. 1912) 1922 FT7 Yao FT7

and the baskets and pots. A wooden dish *ubisi* may be seen occasionally, but of late years, this has been generally replaced by enamelled articles. 415 [177]

Around the entire hut, or simply enclosing a yard behind it, there is often a fence about five feet high. In the enclosure thus formed, many household duties are performed, such as the pounding and sifting of grain. The grain store *ngobwe* often stands in this yard with the pigeon-loft and possibly a hen-house or goat kraal; these are sometimes found in the open space at the front of the house. If a grain store is built within the hut itself, it is then known as *mbunga*. Near the pigeon-loft will be seen a pole with prongs supporting an old pot with water for the pigeons to drink. In a tree in the bush nearby, there may stand a beehive, consisting of a bark cylinder. Similar cylinders are sometimes used as pigeon-houses. 361 343 [331]

The large pots for brewing beer are usually set in the yard or on the back veranda, together with a basket of split bamboo for carrying fowls, *chitetete* (Yao and Chin.). 415

Gourds. Gourds are grown in the village for use as vessels of various kinds. Different shapes serve different purposes; names are given them according to use rather than shape, though these more or less coincide. Ladles for water or beer, *masomalo* or *ngoso* (*nsomere* or *chiko*, Chin.) are usually long-handled gourds (Pl. XIV, figs. 7, 8, 9). Drinking vessels for beer, etc. *chipunde* and a specially large one, *mtumba* are usually of the shape illustrated in Plate XIV, fig. 1; sometimes they are like fig. 5, but this shape is more commonly used for water. *Lipache*, the type illustrated by fig. 2, is also used for drinking or for holding gruel. Oil flasks, *chisasi* (*tsupa*, Chin.), are usually of the double-bellied type (figs. 4 and 6). Salt bottles, *chitumba* (*chipuru*, Chin.), are similar to oil flasks. Rattles, *sanje*, used at dances etc., are also made from gourds, often from those with tuberosities (fig 3). Other uses for gourds include pipes, snuff-boxes, enema funnels, and resonators for musical instruments.

Pottery. The art of pot-making appears to have been known to the Yao for a very considerable period. There is no history relating to its introduction among them. The art is in the hands of the Yao women. As among all Nyasaland tribes, a particular kind of clay is used and no admixture with any binding substance is made. The pots are simply moulded by hand from base to brim and, without the aid of any wheel or other device, wonderful symmetry is attained. 323

After drying, the pots are fired by being set on their bases on the ground and a wood fire is made round and above them. They are then sprinkled with an infusion of the *ngwengwe* or *ntumbi* tree, a head of millet being used for the purpose, after which the pots are set upon a fire and millet husks are thrown into them and allowed so to be incinerated. These customs, a kind of christening of the pots, "insure their turning out well."

No glaze of any kind is used, but they are sometimes colored red by boiling with a pigment called *ngowe*, prepared from a red sediment found in sluggish streams. The preparation of *ngowe* is in the hands of men and women who make a trade of it, such as a man called

3: Stanzas D-5 (ca. 1912) 1922 FT7 Yao FT7

323 Njusi near Ilumba. Sometimes pots are also rubbed all over the outside or in patterns with *mungu*, a natural graphite.

323 Patterns of a simple character, often of the herring bone order, are commonly graved
534 about the neck of the pots with the aid of a stick of bamboo. There is considerable variety in the size and shape of the pots made. As with gourds, the pot takes its name from the use to which it is put and not from the shape or size. All pots have rounded bottoms; none have a flattened base or standard.

The following varieties of pots may be mentioned:

323 1. *Lilenke*, large pots for beer-making. These are usually roughly made and seldom
415 have any decoration on them; they stand about two feet high and are wide-mouthed (Pl. XV, figs. 1, 4).

2. *Lewale* (*nlewale*, Chin.): water-pots. These are usually well moulded and well finished pots, full bellied with broad base and a certain amount of neck. They are practically always decorated and often colored. They are about twelve inches high and twelve inches across the broadest diameter (Pl. XV, figs. 8, 9, 10).

3. *Chiubupe* (*nthale*, Chin.): cooking pots used for cooking the flour porridge, *upali*. These are wide, open-mouthed pots six to ten inches high, with belly and more or less straight sides (Pl. XV, figs. 5, 6, 7). This name also applies to the cooking vessel for medicinal concoctions.

4. *Chijungu* (*mpika*, Chin.): smaller pots of the same type as 3, used for cooking beans, fish, green stuff, and the relish *mbopo* (*ndiwo*, Chin.) (Pl. XV, fig. 3).

5. *Mtale* (*nkuta*, Chin.): the bath water pot. The smallest pot used for heating water to bathe the husband after sexual intercourse bears the same name. It is found among both the Anyanja and the Wayao (Pl. XV, fig. 2).

6. *Mbale* (Yao and Chin.): the plate, a shallow, wide-open vessel.

Baskets. The basket work of the Yao is all of one type and is done by the men. All
285 baskets are made of plaited strips of bamboo, the free edges of the strips being bound between thicker pieces of the same wood forming the rim, the binding being done with the stem of a creeper. They are made in various shapes and sizes. Some are rendered waterproof and used as beer mugs. The following types of basket are in use:

285 1. *Chiseto* (*lichewo*, Chin.): a circular, open basket, shallow and wide, six to ten inches
415 in diameter; it is used as a food dish or to measure flour, etc. *Chitungu* (*nsungwa*, Chin.), a rather larger one of the same shape, often decorated with beads is used to carry flour, while a still larger basket called *chipeto* is commonly used by the women for winnowing out the chaff from the partly pounded maize (Pl. XVI, figs. 11, 15).

2. *Lubulula* and *chitundu* (in Chin., both are called *ntungu*): deep baskets usually about as deep as they are broad; the bottom is approximately square, but the rim is circular. *Chitundu* is about six inches high and six inches in diameter; *lubulula* is about a foot in all dimensions. These large baskets are used for carrying any food-stuffs in bulk, e.g. grain and pumpkins (Pl. XVI, fig. 16).

3: Stannus D-5 (ca. 1912) 1922 FT7 Yao FT7

3. *Mtungwi:* this large double basket one half of which fits over the other like a cover, is now very common among the Yao; it was copied from the Swahili *kijumunda*. The body is made in the same way as the other baskets, but each half has a broad rim of wood which is always cut profusely into patterns (Pl. XVI, fig. 13, and Pl. XVII). 285 415 [177]

4. *Chimumbi:* the beer mug, a small hemispherical basket rendered waterproof by smearing with a sticky substance prepared from the pounded stem of the *mpeso* tree or from the root of the *mpuno* plant mixed with charcoal (Pl. XVI, fig. 12).

5. *Lisungulo* (*lupe*, Chin.): the beer strainer made in the shape of *chikungu*, but the strips of bamboo forming the warp and the weft are of different thickness, so that spaces are left for the fluid to run through (Pl. XVI, fig. 14).

Mats. In years gone by the Yao made a rough kind of plaited matting of split reeds called *chiponde;* it is not seen today. Another type of mat seldom used today is the *lichika* (*chika*, Chin.), made of a number of reeds of equal length bound together by several rows of interlacing string (Pl. XVI, fig. 7). Reeds are also used to make the *upeso* (*mpeso*, Chin.) (Pl. XVI, fig. 10). When dry they are split and fastened out with the smooth surfaces all on one side. A number of reeds so flattened lying side by side are then sewed together with native string, and form a clean, smooth mat for sitting or sleeping. 285

Mats made of plaited strips of sun-dried palm leaf are now in common use, the art of making them, I believe, having been introduced from the coast. Large mats of this kind called *kisubi* are used in the chief's courtyard (Pl. XVI, fig. 9). Smaller ones called *ukeke*, or by the old people *ukanga*, made from the leaf of the wild date palm, are used for sleeping (Pl. XVI, fig. 6). Since the advent of the European, mat making has become an important industry, and *kisubi* and *ukeke* are to be found in every European house.

A still finer kind of mat, circular in plan and stained in patterns, has lately been introduced by the Swahili. Red and black dyes are generally used; the red is either *mpuno*,[1] or a stain called *ukawulo* prepared from the bark of a tree called *usoche;* the black dye is made from the root of a vine, *likunga* (*chikuu*, Chin.), the itch bean. [386]

The matting made of these strips of palm leaf is in the form of a ribbon from three to six inches wide, according to the fineness of the strips. The ribbon of matting is sewed into the form of a cylinder by plaiting the edges of the ribbon together in a large spiral. This cylinder of matting is then cut down one side and laid flat, and the cut edges finished off with a plaited mat border (Pl. XVI, fig. 8). It will be seen that, owing to the way they are made, these mats are never quite rectangular. The ribbon of matting used for the circular mats is narrower still and sewed round and round in a flat spiral fashion.

Cloth. The Yao in years gone by made a woven cloth, but the art has long since died out, and I have never seen a piece of native-made cloth. I imagine, inasmuch as bark-cloth is still worn by the poorer people, that the native-made woven cloth was only worn by the few, probably the chiefs. The older cloth was undoubtedly bark-cloth, worn, as I 286

[1] Vide supra, p. 341.

3: Stanzas D-5 (ca. 1912) 1922 FT7 Yao FT7

286 have said, to this day, and also appearing as the proper dress in all ceremonies. Clothing nowadays, among the majority, consists of calico of various kinds brought in by traders and further adorned to under *Dress*.

287 Bark-cloth, *lisunde* (*shisunde*, Chin.) is made by the men. A piece of bark about two feet by one is cut from the living tree; the outside portions are removed and the whole piece, after being well scraped, is soaked in water. When partly softened, it is removed and hammered out with a wooden mallet; the process is repeated till the piece of bark is soft enough to enable it to be wrung in the hands, thus further loosening the fibres. The soaking, hammering, wringing, and pulling are continued till a piece of cloth three by five feet is obtained. This is sun-dried and yields a soft, pliable, and warm material. Several pieces may be sewed together to make a large sheet. Bark-cloth is sometimes stained black by soaking it in a kind of thick mud found on the plains. The mallet consists of a piece of hard wood with serrations on its face, held in a split stick handle; it is called *nhosuro*. A log of wood with a flattened surface, called *nhungwe*, plays the part of the anvil, the man who is using the mallet usually sitting on one end of the log.

281 Skins. The Yao are unacquainted with the art of tanning. Skins are prepared only by drying, and then softened by hammering with stones. They are not employed as articles of clothing but the larger ones are used to sit upon, the skins of the leopard and the lion being reserved for chiefs. Others are used to make bags to carry flour, for powder pouches, and to cover guns. The blacksmith's bellows are made of goat's skin.

283 String, *lubwji* (*shingwe*, Chin.): Two kinds of string are made, one from flax, the other from the inner part of the bark of the baobab tree. Fishing nets are made from the former, game nets from the latter.

326 Metals and metal working. The only metal ever obtained from the ore by the Wayao was iron, and it is probable that they learned this from the Angoni and Anyanja. The industry is now nearly dead since the introduction of trade articles. A few blacksmiths still ply their trade, but their work is restricted to the manufacture of knives, spear-heads, and razors. Hoes are no longer made. The hoe blade supplied by traders is in the form of the old native-made article, which had in turn displaced the older hoeing-stick. The blacksmith deals with his mass of metal by hammering it with stones. He provides himself with bellows, a small iron hammer, and a rudimentary kind of tongs. He is called *wachipale*.

324 Stone. The only important uses for stones among the Yao are for supporting the cooking pots on the fire, for heating water in some medicinal preparations, and for grinding millet. For this last purpose, a large, flat stone, inclined at an angle, is set up in some convenient spot, often on the veranda, and the grain is ground by means of a smaller stone held in the hands.

412 The flour pestle and mortar. Maize flour is prepared by pounding the grain in a
[252] big wooden mortar, by means of a wooden pestle, consisting of a pole some five feet long and four inches in diameter with round ends. The mortar consists of a tree trunk about

two feet high and fifteen inches in diameter, hollowed out from above for about two-thirds of its length. Many are made with a kind of base or stand, and some have roughly carved bosses on the outside; these are called "the breasts," doubtless emblematical of women, a large part of whose life is spent in preparing flour (Pl. XV, fig. 15). 412 [532]

The fire-stick. Matches are becoming more widespread year by year and soon the knowledge of how to make fire with a fire drill will be lost. The method employed among the Yao is as follows: a flat surface is cut on a piece of partly rotted wood. In the middle of this a small depression is made, and on one side of the piece of wood a groove is cut leading from the flat cut surface. The piece of wood is held firmly on the ground by one person with a piece of old scorched cloth or some charred sticks at the base of the groove. A second person, by rolling a stick of hard wood rapidly between his hands with the point directed against the depression on the flat surface in which a little sand has been placed, drills a hole into it. The heat developed is sufficient to cause the powdered rotten wood to start smouldering. This is then turned out on the cloth, which is gently waved in the air till it catches fire (Pl. XV, fig. 16). 372 [177]

Boats. With the exception of a small coracle-like vessel, *likuiguu*, made of rough bark and used for crossing streams, the Yao have no boats. The dug-out canoes which they use at the present day are made for them by the Anyanja. In addition to the bark boat, they use a kind of raft made from the pith tree, *bunguu*. 501 [439]

Tobacco. The use of tobacco in some form is universal among the tribes of Nyasaland and the Yao are no exception. The method of use varies among the different peoples; smoking, chewing, and snuffing are all practiced, but while the Anyanja is essentially a pipe-smoker, the Yao takes snuff, although I think only lately he has also taken up smoking and chewing. A short time ago, a Yao who chewed would have been laughed at. The Anyanja do not chew but take snuff to a certain extent; the Angoni who do not smoke or chew are inveterate snuff-takers; the Atumbuka, Atonga, Asenga, and Ankonde are pipe-smokers and in lesser degree snuff-takers. 276

Tobacco is called *sona* (*fodia*, Chin.). It is prepared by sun-curing the leaf, which is then rolled up into a twist and allowed to dry further. The common tobacco pipe consists of a clay bowl, often ornamented, and a reed stem; it was formerly called *ekilonge*, but is now known as *kalio* (Pl. XV, fig. 11). For hemp, *chamba*, the Yao use a water pipe called *ndundu* (*ngunda*, Chin.); this consists of a bamboo water container from which projects a reed stem surmounted by a clay bowl (Pl. XV, fig. 13). The word *ndundu* is also used for a tobacco pipe.

When tobacco is chewed, a little lime paste *nambale* made from snail shells is put in the mouth "to bring out the flavor," a small clay jar being used to carry the *nambale*.

Both the Wayao and the Anyanja prepare snuff by grinding the broken-up tobacco leaves with a stone in a potsherd; the powder is then turned out into another sherd and warmed over a fire. A few drops of a preparation called *magadi* is added for flavor. *Magadi* is

3: Stannus D-5 (ca. 1912) 1922 FT7 Yao FT7

276 made by boiling down the solution obtained by straining a decoction of water and the ashes of banana leaves; it contains, of course, some of the inorganic salts from the banana leaves. Without this addition, snuff is said to lack its proper aroma. The Angoni do not warm their snuff, but add a *mapodi* made in a similar way from cow dung.

262 146 Food stuffs. According to the general supposition, the native lives on a very monotonous diet, with a great excess of carbohydrates to the exclusion of proteids and fats. While it is certainly true that he does not consider that he has been fed without his "whack" of flour (maize, millet, rice or cassava), still he feels that his meal is a poor one if it does not also include some secondary dish, such as beans, fish, or green vegetables cooked like spinach.

243 The grains chiefly grown and used by the Yao are maize, millet, and a certain amount of rice.

262 Millets (sorghum): *Mapemba*, a tall variety, eight feet high, which is harvested late; *Mapemba pa mnunji*, a hairy variety; *Lisembalaka*, a short kind, five feet high, which matures early; *Mbulau*, characterised by the fact that the ripe grains will fall when the plant is shaken, and by a rather bitter taste; *Nandenji*, a variety six feet high which ripens quickly; *Kapile*, a shorter variety with a bitter taste but, according to the natives, a pleasant smell. (It makes good beer.)

Eleusine: *Liwanje*, about four feet high with very small grains; *Chindumba*, used for making a very strong beer; *Mundi*, a variety eight feet high. Cyprus grasses: *Usanje;* there are two varieties, *Kaumbata*, which curls up and is used for making strong beer, and another kind which is not curly. [273]

Maises: A number of varieties of the species *Zea mays* are grown by the Yao: *Chiseuse*, a black-grained variety; *Nampalala*, red maize; *Liwanje*, the seeds of which are large, white, and dented; *Nauchinga*, with grains flattened on the free surface; *Kanjalanjala*, a dwarf maize about four feet high.

Rice (*Oryza sativa*): *Mpunga* (generic name *Likoti*), a large-grained variety; *Singana*, with very long grains; *Linguindimba*, red rice; *Mbangala*, characterised by the strong, not unpleasant odor it gives out when being cooked.

294 262 Cassava: *Chinangwa* is grown everywhere, but the Yao do not prepare flour from it, preferring to eat it raw at odd times. There are several varieties; *Chinangwa cha chiseuwa*, white cassava; *Chinangwa cha mbusani*, a brown variety; *Liwanga*, a bitter species (*Manihot utilissima*) which produces a very large root; *Chilasi* and *Kam"anga*, varieties of *Manihot aipi*, the former characterised by its long, tapering leaves, while the latter is a dwarf variety with a big root.

Beans: there are a number of species of beans grown: *Mbevumenda* (*Cajanus indicus*), *nguanda* (*Vigna catiang*), *mbuwao* (*Phaseolus mungo*), *mbuunda*, (*Phaseolus sp.*), *ntambakada*, (*Phaseolus sp.*), *ngandomalui*, and a ground bean *njama* (*Voandzeia subterranea*).

3:Stanmus D-5 (ca. 1912) 1922 FT7 Yao FT7

Peas, *nsuwa* (*Pisum sativum*), are grown in abundance. There are two other varieties; *ndwa* (groundnuts), and *chimbuyiva*. 244 262

Sweet potatoes: *mbatata* (*Ipomoea sativa*), of which the natives are very fond; they distinguish a red and a white variety, *mbatata ngunjejeu* and *mbatata ngwiwuru*.

The tuber-like root of a bush called *ngumbu* is also eaten, likewise the young underground shoots of a palm tree. The leaves of the sweet potato and the leaves of many wild growing plants are collected by the women and cooked like spinach; the flowers of pumpkins are used in a similar way. Of fruits eaten, the banana, *lipumbu*, takes first place. A very large number of species of *Eumusa* are grown, including *mahumbuku*, *mbinga*, *mchali*, *nasiri nungungu*, *kabutu* a dwarf banana, *kaipeu* a wild banana, and *mlempu*, the plantain. The paw-paw is found all over the district. There are several varieties of pumpkin, *lyungu*, including *mbonda*, *chindondoli*, and a very large species called *mtwa wa ngwena*, "the crocodile's head." Varieties of cucumbers include *lingaka* and *kalitungula*. 262 222

A large number of wild fruits are eaten, among them figs, *kalaju* (*Ficus*), *kisuku* (*Uapaca*), *chitili* and *liungu*, the fruits of two species of *Landolphia*, *matenga* or Kaffir oranges (a species of *Strychnos*), *chilunda*, the fruits of *Hyphaene* (palms), *matuskwa* (*Mgrianthus*) a wild tree belonging to the mulberry family, and others, *ndowa*, *mahongondombo*, *ndondowako*, *chingulungulu*, *chindopolya*, *malembe*, *likwenda*, etc. The seeds from the heads of bulrushes (*Typha*) are mashed up and eaten.

All fish are eaten except the *ngunga*, which always causes urticaria. 262

The flesh of all the antelopes, of oxen, sheep and goats is eaten greedily; only bushbuck is avoided by some people as it is said to cause a skin eruption. Elephant is shunned by many on account of its rough skin, also rhinoceros because of the ulcers which it often has on its body, and hippopotamus on account of the marks on its back which are thought to be akin to leprosy. People eating the flesh of these animals are supposed often to sicken with leprosy, the pachydermatous skin, the ulceration or anaesthetic depigmented patches of that disease being reproduced, as the case may be. Few will eat pig or warthog on account of the digging habits of these animals. It is thought they may sometimes grub up bodies from graves. These flesh taboos may be due to Mohammedan influence. The lion, hyaena, and fox no one would touch, as they are supposed to be connected with witch,[1] but the heart of the lion might be eaten to acquire courage. Few will touch leopard flesh, but Kazungu's descendants do so. All will eat of the flesh of the serval cat but very few of the common wild cat. The rock rabbit, *ngungwiru* (*nkiru*, Chin.), is refused by most Yao as it is a "beast without shame," having no tail to hide what should in decency be hid. Very few will partake of the baboon, but monkey is acceptable to many. A few reject porcupine, supposing they will break out in spots, while the zebra may cause stripes, and none will touch the skunk. No one eats *ensje*, a mouse that is believed to die if it crosses a path. All kinds of rats are eaten, but the shrew-rat and cane-rat only by boys. Snakes 262 753 [177] [834]

[1] Vide supra, p. 186.

3: Stanzas D-5 (ca. 1912) 1922 FT7 Yao FT7

no one will touch. With the exception of certain birds such as the crow and the hawk, most birds are considered fit to eat. The hornbill is not eaten, as it is supposed to carry part of a corpse on its nose.[1] Fowls form a regular article of diet, but some taboos in this connection are mentioned elsewhere.

Eggs are eaten only by children and old people; that is, by those outside the child propagating age. Milk is never consumed in any form. They say, "What a disgusting habit, to suck the juice of an animal while it is still alive!"

Pregnant women will not eat certain things lest the child be born with some deformity, such as the snout of a pig, or the white stripes of a zebra.

Art and decoration. Sculpture can hardly be said to be an art known to the Yao. The only piece of stone work I have ever seen was a granite boulder, on the surface of which cup-holes had been made for the game of *Bao* (Pl. IV, fig. 4).

Of late years, individuals here and there have begun carving wooden figures of men and animals. The Yao, of course, make no idols. It is uncertain exactly how long it is since any of these people started producing wooden figures. I should think that this art has sprung up within the past twelve or thirteen years, that is to say, since there has been a market for them among European residents. In the first place only natives and some of the common animals, the eland and leopard, were represented; since then, many animals and Europeans have been copied. The native is extraordinarily clever in reproducing characteristic features in dress, etc., so that a Portuguese is easily distinguished from an Englishman. The little models in ivory of animals and native household objects, made by the Swahili people on Lake Nyasa, have never been copied by the Yao. Neither do they make clay images of men and cattle as do the Zulu-descended Angoni and cattle-keeping Wankonde. No native would allow any wooden figure to remain in his house for fear of ill luck; the women especially would look askance at them, fearing some misfortune in their next pregnancy. Little wooden figures of birds, however, are sometimes seen affixed to the point of the hut roof.

The making of carved figures, then, is of recent introduction, or rather is a recent event in the evolution of the Yao, as they were not taught but self-inspired in the work.

The ability to make representations of objects by drawing appears in the same way to originate spontaneously here and there as a sport. Natives with a talent for drawing are found among all the tribes, and among the Yao, it is said, there have always been some who have been able to draw. Naturally enough, their reproductions are made on the walls of their houses, and their subjects are generally animals of the forest, sometimes men and houses, or some other object of particular interest[2] (Pl. VIII, fig. 1). I also give sketches of some other drawings I have noted (Pl. XVIII); the line figure of a man at Mahanjila's

[1] Vide supra, p. 327.

[2] Cf. A. Werner, 'A Native Painting from Nyasaland,' (Anc. Afric. Soc., London 1908, vol. 8, no. 30, p. 189-190).

3: Stanmus D-5 (ca. 1912) 1922 FT7 Yao FT7

(fig. 14), and an antelope from Mpoan's in Ilomba district (fig. 11), also two birds at Pikasi's which I should think represent a fowl and a crow (figs. 12, 13). It is interesting to compare these attempts which show a natural feeling for shape, with others, the work of an Angoni youth in touch with a European mission station, who depicts the missionary, his donkey, his dog, and a chair but with little or no sense of form. Note the dots above the animals' backs which represent their feet seen from the other side (Pl. XVIII, figs. 15–18). 532

The models of animals and other objects made in relief on the ground at *Lupanda*, and of animals in grass and bamboo at *Chipute*, are referred to under *Initiation Ceremonies*.

Decoration is limited to the making of patterns of geometric design on many household articles. The graving of pots is mentioned under *Pottery*: gourd vessels sometimes have lines and triangles cut on the surface; ivory knife handles may have concentric circles graven on them, the same being true of ivory nose-rings and necklaces. Spear handles and walking sticks, snuff-boxes, pipes, the head-rest and the necks of musical instruments too, are commonly engraved with designs. The wooden rim of the *ntungwi* basket is always so treated. A series of these designs from baskets is reproduced (Pl. XVII). Occasionally geometric patterns are painted on the walls of huts. The best example I have seen is shown in the photograph which represents a Mohammedan mosque in South Nyasa district. This, I think, gives the key to the origin of these geometric patterns, namely, Swahili influence among the Yao (Pl. IV, fig. 1). 531

Personal ornamentation. The skin color admired most among the Yao is a rich brown and is likened to the color of the millipede, *kijongolo*. A very black skin is not liked and a man is said to be "as black as a crow." Very light colored skins are equally distasteful to some and considered to resemble the color of a roasted crab. The hair should be jet black. Young men anoint their heads with a decoction of *nsumbwapu* pods in boiling oil to make the hair black and lustrous. When the hair is turning white, a substance made of the charred roots of a plant called *chinjoje* is put on to make it black. 832 826 302

Natives recognize that some among them have red hairs on their heads or in their beards, and such a man is called *nutsuma*, *nutsuma* being the name of a caterpillar which lives on the *mtsuma* tree and is covered with long red hairs. 832 826

The old men used to wear wigs, *chinindi*, made of knotted string blackened and oiled to look like hair; the women wore one called *chikwem*. These were used to disguise greyness or baldness.

The women sometimes let the hair grow long and then thread beads on wisps of it. This fashion is called *chitanga*. The large red bead, *chinindo*, is now used for the purpose. This fashion was adopted by the old women and those in charge of the *Chipute* ceremony. Strings of beads threaded on the hair falling down round the head are called *lihombolo* or *nulombolo* (plur.). Women sometimes thread beads on the crest of hair called *nchuchu*. Ordinarily the hair is periodically shaved or sometimes cut with a knife, but the process is painful and therefore unpopular.

3:Stanton D-5 (ca. 1912) 1922 FT7 Yao FT7

302 Shaving is a rite practised in mourning.[1] Some old men and women, especially medicine men, make a practice of never cutting the hair and never washing it (Pl. VII, fig. 2). One occasionally sees heathen with very long hair in the villages.

[158]

The Yao do not follow the Angoni practice of tying up into tags the hair which has been allowed to grow long with palm leaf string, but they sometimes tie up a single wisp and make it up with medicine; this is called *hakambi* or *ujambi* (plur.).

The scalp may be shaved in various fashions. Among men, it is quite common to trim the hair on the forehead, *ka-ejikila*; they must not, however, trim the hair behind (Pl. XVIII, fig. 2). Women, on the contrary, trim both in front and back; a man doing so would be laughed at. A woman for the ceremony of *Likiwe* shaves the front hair a little higher still, but she must be careful not to do so at other times, otherwise she would make herself a laughing stock (Pl. XVIII, fig. 10). The hair is sometimes shaved on either side of the nikilino in front, in imitation of temporal baldness; both baldness and this method of shaving are called *nanwanwe* (Pl. XVIII, fig. 4). Or again, among old Yao men the crown is shaved; this and natural baldness are called *hakasi* (Pl. XVIII, fig. 5). It is a fashion much affected by old men and great annoyance is caused them by any young upstart who does the same. Other methods include for men *upile*, "a rat's path," an antero-posterior median line shaved (Pl. XVIII, fig. 9); *ingalangandinje*, two shaved lines made from back to front on either side of the head (Pl. XVIII, fig. 3); for men and women, *kpundalinile*, "the garden is (dead) overgrown", one lateral half of the head shaved (Pl. XVIII, fig. 7); for men, *nakacha* a crest of hair left along the mid-line, both sides of the head being shaved (Pl. XVIII, fig. 8); *wezi* (*chilumba cha wezi*), "the moon," a crescent shaped area shaved on one or both sides of the head (Pl. XVIII, fig. 6).

The eyebrows and eyelashes are always left to grow normally among the Yao.

The Yao man used to take great pride in his beard; it was the object of a good deal of washing and combing. It grew to considerable length and was not cut or trimmed, but the hair growing down low over the throat was shaved, as was also the hair immediately below the mouth on the under lip and the moustache, as it was thought to get in the way when drinking. The whiskers were allowed to grow like the beard.

[832] [936] Hair on the chin or upper lip of a woman is rarely seen and on account of its rarity is much prized. Such hairs have a monetary value for making medicines, a single hair being sold for eight yards of calico or two shillings. Body hair is considered to be a sign of strength; on the chest, it is known as *chanpakasa* (*ka-chanpakasa*, to be strong). Body hair including hair on the back is by no means as rare as has been supposed. Sir H. H. Johnston says that he has never seen it,[2] a statement which shows lack of observation. The hair on the forearms and thighs is called *ulanje* or *chambanda*; Hetherwick translates this word,[3] I think wrongly, as hair on the body. Body hair is never removed in any way. A man named Katumbisi ("the little vulture") of Ulumba had a very large amount of body hair; he was likened to a baboon and was a source of much interest to the children who saw him.

[14]

[1] Vide supra, p. 264. [2] British Central Africa, op. cit., p. 395. [3] Op. cit., p. 111.

3:Stanna D-5 (ca. 1912) 1922 FT7 Yao FT7

The hair of the axilla is always removed in men and women, usually by shaving but sometimes in the case of women it is dealt with as in the case of the pubic hair. A man with unshaven axillae would be laughed at and referred to as "a man carrying a fowl in his armpit." The axillary hairs are called *wandanga pa wanyanyapa* (*apanyapa*, the armpit). 302

The pubic hair, *wandanga*, is removed by both men and women; in men by shaving, in women sometimes by shaving, but preferably by plucking out after the application of a medicine called *wanwandanga* (*ku-wana*, to pluck a fowl), which renders the operation easy. It is prepared from the juice which exudes from the bruised bark of the *wana-wandanga* tree. There is a woman at Malanyu's who has never grown any axillary or pubic hair; she is called "the rugose elephant"; a rugose elephant has no tusks. It may be noted in passing that the woman has borne children. [824]

A few men have the hair round the anus shaved. Such a service can only be asked of a man's closest intimate, such as a brother-in-law. [607]

I have dealt with tattooing among the Yao in an article, as yet unpublished, on tattooing among the natives of Nyasaland.

The teeth among the Yao proper are never mutilated in any way, though the Amanganda go in for small file marks at the cutting edges of the incisors. 304

The old Yao women, of whom none may still be seen, used to pierce the upper lip and wear a circular disc of wood often two inches in diameter in the hole; this is called *lupelele* (Pl. VII, fig. 4). The disc was often made of lead and sometimes of ivory. The lead might be hollowed out on the upper surface; it was then called *lupelele ka utali*. The disc caused a considerable projection of the upper lip which was much admired. A man, on the other hand, with protruding lips would be nicknamed "the warthog," *nanungwinde*, and considered ill favoured. 304 301 [832]

This *lupelele* fashion has gone out and of later years the *chipini* or disc worn in the left ala of the nose has become more and more fashionable (Pl. II, fig. 2). Originally the *chipini* consisted of a small disc of lead not larger than a three-penny piece, which lay on the outer surface of the ala, held in place by a stem, *kubinji*, which pierced the ala and passed into the nostril. Now the fashion is to wear a very large disc, often an inch in diameter, which itself occupies a hole in the substance of the ala of the nose; it may be flat-topped and called *chipini cha utanga* ("mushroom"), or the upper surface may often be concave, in which case it is called *chipini cha utali* (*litali*, a grain mortar). These discs are made of lead and are sometimes called *Kitini*, a recent word and doubtless a corruption of "lead." Others are made of ivory, which may bear some geometric pattern on the exposed surface. A *chipini* used to cost a fowl.

Among Yao men and women, the lobule of the ear is often pierced but nothing is worn in the hole except possibly a stalk of grass.

Combs for use and for ornament are worn in the hair by both men and women. The ordinary comb without decoration is called *likwandapa*; it is made of a number of pieces 301

3:Stanmus D-5 (ca. 1912) 1922 FT7 Yao FT7

301 of bamboo fastened together at one end on the flat side by binding with string, the free ends being sharpened to form the teeth of the comb. If the fastened end is ornamented with beads sewed on in patterns, the comb is called *lisemulo* (*lu-semula*, to comb). *Lisemulo lia*
[824] *shinguembata* from *lu-uguembata*, to be sticky, is the name of a small comb worn purely for ornament. On either side of the base of this comb, pieces of wood variously shaped are glued with the sticky juice from the root of the *shinguembata* tree. In this way, a sort of inlay is produced. Pieces of tin cans are sometimes substituted for wood. Women occasionally wear in their hair the small *shiwondo* knife used for tattooing and shaving.

302 The native takes readily to perfumes of European introduction, but previously he was
[172] not an entire stranger to the use of such essences. *Mbolo*, the bulbous root of a kind of grass which grows near water, contains some aromatic principle which has a pleasant odor. The stem is bent around and fixed into the bulb; this is then covered with beads and slung around the neck. *Mlunguao*, the Mlanje cedar, is also used, as well as the fruit of a shrub called *chiungua*. These substances are scraped into the castor oil used for anointing, and give it a pleasant odor.

No pigments are used on the body. As a sign of great rejoicing, the head and face and perhaps the whole body are covered with ashes, but the natives do not even paint the face with flour on ceremonial occasions.

301 Bands of beadwork are worn around the head, either as a simple band or a band finished off with a bunch in one spot, or with a tassel. Finger rings are worn made of ivory, shand hoof and horn, lead, and iron wire. There is also a great variety of bracelets and anklets, a list of which is given below.

Chipumbo: made of plaited grass, worn chiefly by little girls and women who cannot afford more expensive bracelets. As many as half a dozen may be worn on the wrist.

Likungula (pl. *makungula*): single circles of solid brass, one half to three quarters of an inch in diameter, worn by women usually as anklets, one or two on each limb. They may still be seen on some of the old women; but as they cause much discomfort, they have gone out of fashion. A man used to be very proud to see his wife adorned with so much wealth and she was content to be so hobbled by her vanity. The hammering up and pulling open of the *likungula* circle in order to remove it cost a fowl.

Chilungu: a brass bracelet of small calibre; *ilungu* (pl.) signifies a spiral cylinder made from the same thick brass wire covering the entire forearm.

Lilwinjili: like *chilungu* of thin brass or iron wire, worn on arms and ankles.

Ching'anda: a bracelet of fine brass wire wound round a circular core. All the brass comes from the coast.

Likusa: a large ivory bracelet worn by men and women.

[237] *Ukanga:* ("stiff tail hairs of an animal"), the bracelet made of the tail hairs of the elephant or the gnu.

Lichoka: the bracelet made from elephant hoof.

3: Stanner D-5 (ca. 1912) 1922 FT7 Yao FT7

Chipilipe: (*lu-pilipa*, to roll round), a bracelet made of beads wound on a bark-cloth core. 301

Chipa: the same, but the beads cover a double core so that the bracelet is wider.

Mandu: a circular hollow cylinder of beadwork which lies flat as a bracelet.

Necklaces are much prized by the women. All the children, too, if possible, are provided with some kind or another, even though it be only a piece of string. They are generally made of beads; charms and their ornamental imitations are also worn as necklaces. Some names refer to the pattern of the beadwork, others refer to the length or fashion of the necklace.

Chilupa is a necklace which hangs down in front to the level of the breasts; it does not go under the arms, as Hetherwick states.[1] It consists of three, four, or five strings of beads in rows, arranged in a pattern.

Anpunjo: hangs down as far as the ankles. The word *Anpunjo* means "chase me!"

Chinpunpe is made of a single string of beads, but hangs as low as *chilupa*. *Chilupa* is of more than one string and various colored beads enter into its composition, often in *lituwale* pattern.

Chipute: consists of a single string of beads of one color tied tightly round the neck without tassel or bunch.

Chilunsunke is worn like *chinpinpe*, but beads of more than one color are used.

Chilwanpe resembles *chilupa*, only more strings of beads are used.

Mapunda: a solid cord of bark cloth covered with beads of one color, either dark blue or white, worn round the neck crossing on the chest and under the armpits; the cords are as thick as the finger. These are worn especially by girls after *Chipute*.

Chimunda: a cord of beads as in *mapunda*, but worn round the neck only. The necklace consists of perhaps six strings of beads, the first of which is worn close to the neck, while each succeeding string hangs lower and more loosely.

Chipeti or *chikolije:* made of three plaited strands of beads, generally white.

Nlokoliko: a necklace with a tassel, usually consisting of two large red beads.

Mlulu ("a striped snake"): made of four strings of beads, each row being of one color.

Mchilu yakuwe ("the rat's tail"): like *mlulu* consisting of two, three or four strings of beads.

Chuma cha mandu (*mandu*, "bag"): a hollow cylinder of bead work usually of blue and white, worn as a necklace. *Chuma* is the Chiyao word for beads; in Chinyanja, it means wealth.

Lituwale is a word referring to the pattern of the beadwork, so called from the resemblance to the eyes of the cane-rat; in *lituwale*, white beads are arranged in rosettes round a series of larger black beads in a band.

Most women and many children wear beads round the waist. They are supposed to be very attractive to men. The prostitute wears more than anyone else, for the same reason

[1] Op. cit., p. 117.

30 [54] that she is tattooed more profusely on the buttocks and legs. The strict of beads was formerly made like *mapundu* with a bark-cloth cord, called *ntumbo* or *ndude* (*lu-ude*, to slip off), referring to the *ndude* being slipped off over the legs. The fashion now is to wear single strings of beads; each string is of one color but all the strings are different and perhaps number a dozen or more.

Lipundu: a bead belt three-inches wide, worn by Yao women near Lake Nyasa. A bead apron, *Ninjiwe*, is also worn by them but not near Zomba (Pl. VI, fig. 2).

[763] A woman removes her beads when she is "unclean," that is: (*a*) during the menstrual period, (*b*) during the period of mourning for a near relative when coitus is forbidden, (*c*) before the birth of a child and afterwards until such time as she may resume intercourse with her husband.

A large variety of beads has long been used by the Yao. There are some rarely seen now which were much prized in years gone by, while others are of quite recent introduction. [77] There is no evidence that they themselves made beads and there are few which are probably not of European manufacture.

291 **Clothing.** The Yao used bark-cloth before the introduction of woven materials. The older people may still be seen in it and it is used in most of the ceremonies. At one time, they also used to weave a cloth called *likamumbo* from a native cotton plant. This has been given up since the introduction of imported materials.

For the method of wearing cloth, see Pl. II, fig. 2. The very poorest people wear only a strip of calico round the pudenda, held in position by a string round the waist hanging long behind and in front; this is called *mihetle*. Yao women, when menstruating, wear [841] under this a little piece of cloth called *likundi;* it is only worn at this time and not always as in certain other tribes.

721 **Warfare.** Fighting has naturally played a large part in the life of the Yao as among other African tribes, but at no time were these people a trained fighting race. Warfare was of a desultory character consisting mostly of raids by one feudal chief upon another. A party of men belonging to a chief at enmity with another, meeting some of his followers would challenge them, "*Ahende*, who are you for?" The name of the rival chief in answer was the sign for battle to begin. A false answer would never be given to gain an advantage. 726 When about to throw a spear, the thrower calls to his adversary.

The Yao have possessed guns for a long time. Going out to fight, the Yao used to leap from one foot to the other, and spin their guns around in their hands. They made [77] their own stocks for the rifles. They also used to make a small, cast-iron cannon about three feet long, called *kombole*, "a little nose." It was carried in the arms and was touched off by a torch. Drums called *ngoje* were taken into battle. There is an old war drum [534] at Malenya's village, taken in 1896 by the old Malenya from a *Mang'anja* chief called Mkhumbo who lived near Lake Chiuta. Since then, this drum has always gone into battle with Malenya. Around it his men would dance and anyone who had killed a man in battle would run up to it and spit upon it in salutation.

3: Stannus D-5 (ca. 1912) 1922 FT7 Yao FT7

Both before and after the introduction of guns, the Yao used spears, *kipanga*, and bows, *ukunja*. The spear is a five foot long throwing spear with metal head and wooden shaft. No shield was used. Bows and arrows are made from the wood of the *tusa* or *pimbinyole* tree. The string is made of tendon. A double-bellied bow called *ukunje wa mbuma* was sometimes used, but, I believe, originally came from the Anyanja. The arrows, *mpamba*, have a metal arrow-head, and were often poisoned with *kombe*. 411

Hunting. The same weapons are used in hunting: the gun, the spear, and the bow and arrow. Smaller bows and arrows made with bamboo or reed shaft are also employed for shooting birds; one of the arrows has a blunt wooden head and serves to stun the bird. 224 411

From the Anyanja, the Yao learned the use of a harpoon for spearing the hippopotamus. The harpoon is a heavy spear-head of iron about eighteen inches long, attached to a rope and float. From the Anyanja, also, was learned the use of the falling block with spear for killing hippo. [177]

Elephants are caught in staked pits, and the larger antelopes are similarly trapped in pits with the sides sloping inwards towards the bottom, so that as the animal falls lower and lower with expiration, it is eventually suffocated. 224

Small buck are driven by dogs into nets set for long distances in the forest, and then speared or shot. Traps are also set for these smaller antelope and for many other small animals, rodents, etc. Birds are shot or trapped. Bird-lime is also employed. It is prepared from the juices of a number of trees by pounding the vegetable matter in water; the sticky mass so made is applied to sticks or poles. The sticks are placed near drinking places so that the birds alighting to take water become entangled. The poles are affixed to trees so that they appear to be the topmost boughs; this the native does, recognising the common habit of birds to sit on the very top of trees. The strength of the bird-lime is made according to the size of the bird he wishes to catch. [231] 223

Fishing. I am not sure how far the Yao is a natural fisherman. Not long ago he used only a many-pronged spear to catch his fish. Since then, he has acquired from the Anyanja the knowledge of making fish-traps and nets, and of using the fish poison. When the Yao came to live and intermarry among the Anyanja, there was one practice of the latter which they would not adopt and which caused a good deal of ill-feeling. A Mang'anja man coming home after fishing always used to prepare the fish and, leaving some ready to cook, he cooked others for his wife, bringing her water at the same time to wash her hands. After eating her own fish, she cooked the rest for her husband. A Yao would never cook for his wife. 226 [578 563]

Traps. The following is a list of some of the traps I have found in use among the Yao. The sketches will serve to explain their mechanism better than a lengthy description. Some are very ingeniously made, and most recall similar traps made in other parts of the world. 224

1. *Lukwaji lwa litawala*, a trap for the cane-rat (Pl. XIX, fig. 1).

2. *Lukwaji lwa mbindi*, a trap for sharp-toothed gnawing animals, so called from

3: Stannus D-5 (ca. 1912) 1922 FT7 Yao FT7

224 *mbinde*, a joint (of bamboo) which slides down the string next to the noose so that the captured animal cannot bite or gnaw through the string (Pl. IV, fig. 3; Pl. XIX, fig. 2).

2. *Lukonji lua mainde* or *chitawa*, a trap for water-rats (Pl. XX, fig. 7).

4. *Lukonji lua ngwale*, a trap for the partridge (Pl. XX, fig. 3).

223 5. *Chijumba cha ijuni*, "the house for birds," also used to trap small animals (Pl. XX, fig. 2).

6. *Lukonji lua lubesi*, a trap for the neck (of guinea fowl) (Pl. XX, fig. 4).

7. *Lukonji lua chilisuta*, a trap for the tread (of the guineafowl); *ku-lisuta:* to put the foot down, to tread. The string square is about 8 × 4 inches (Pl. XXI, fig. 8).

8. *Liweno*, a trap made of split bamboo. A bird going to pick up the grain is caught by the head when the trap is released by the string which the trapper pulls (Pl. XXI, fig. 3).

9. *Luzu lua ijuni* or *ngwu*, a bird-trap made of netting on a hinged frame-work, operated by a string (Pl. XXI, fig. 4).

[224] 10. *Lilivo*, a falling stone trap for mice. Rats are said to pull off the trap with their tails and are never caught (Pl. XXI, fig. 1).

10a. The same trap set for catching birds (Pl. XXI, fig. 2).

11. *Maleleya:* (*lelele* = hanging loose), a noose for small birds, set on trees (Pl. XX, fig. 1).

12. Fowl thieves use a very simple contrivance consisting of two grains of maize threaded [674] on one end of a piece of string some six inches long, at the other end of which is attached a leaf folded up into the form of a cone. The fowl, enticed by the maize, swallows the two grains and the attached string, so that the cone is drawn over its head; it is then helpless and is easily picked up by the thief, who has only to pull on the string to remove the leaf.

224 13. *Chiguenembe*, a hollow cylinder of wood with noose activated by a wooden spring, for catching rats (Pl. XXI, fig. 5).

14. *Chipoto*, a similar trap made of bark, for mice.

15. *Lilesa:* a plaited bamboo cone into which a rat forces its head to get at the bait, but finds, when it tries to withdraw, that it is caught by sharpened pieces of bamboo projecting backwards into the cone (Pl. XX, fig. 6).

227 16. *Mkungwi*, a fish-trap of the same design, from the Anyanja (Pl. XX, fig. 5).

17. *Msipu*, a fish-trap on the lobster-pot principle, often set in gaps in a fence built [177] across a stream, copied from the Anyanja trap called *mwe* (Pl. XXI, fig. 7).

18. *Njisi*, also I think from the Anyanja, consists of a long basket-work, extinguisher-like arrangement which is clapped down over a swarm of small fish; the hand is introduced through an aperture in one side and the fish removed (Pl. XXI, fig. 6).

3: Stannus D-5 (ca. 1912) 1922 FT7 Yao FT7

Amusements. Among the natives of east central Africa, the chief form of amusement, apart from dancing, might be said to be sitting and chatting; it is interesting to note that there is a word to express "sitting up all night talking." Often the younger members of the community will gather about one of the older men and listen to his stories of travel or fighting in the old days, and some men gain quite a reputation as raconteurs. Or again riddle asking is indulged in to pass the time. Women and girls do not assist at these sittings. 521

Among the Yao youth, wrestling, *ku-lingana* (from *ku-linga*, to try), is practiced with a fixed grip and no leg-work; the victor always accentuates his victory by hitting the man who is down, and pummelling his face with his fist or a stone. 526

A ball game, played originally with a ball of native rubber from which it derives its name, *mpira*, is a great favorite among boys. A dozen or more are divided into sides but all mixed up together. The ball is then thrown into the air to a member of the same side, any of the opposite side jumping into the air to try and catch it, accompanied by the clapping of hands to time.

"Hide-and-seek," *chijusajusa*, and "touch," *chao* or *chaolela* (*chipiasi*, Chin.), are played by boys.

Chinusya: toward the end of the ball game, when it is decided to finish, each boy as he catches the ball puts it to his nose to smell (*ku-nusya*, to smell). He is then "out." At the end of a game of "touch" played in the water, when one touches another, he jumps out of the water, puts his cloth up to his nose "to smell," and is then "out." His cloth may be thrown to him to "smell" while still in the water, after which he gets out without hurry. The object is not to be the last "in." I am unable to explain this custom.

Knuckle-bones is played by girls, *mdodo*, from "*dof*" the exclamation made when catching anything. 524

Mchombua: the Board and Counter game is played in nearly every Yao village. Dr. Sanderson [1] has given a very complete account of a number of the games played by the several tribes in Nyasaland and I need add nothing to his explanation of the methods of playing.

Similar games are widespread throughout Africa and are well known on the West Coast under the name *mancala*. The several games are played, either simply with holes in the ground and small stones, or with a board and a kind of seed procured from Zanzibar. The board is called *mchombua* and the pebbles or seeds or other convenient "counters" *njombua*. Dr. Sanderson uses this word as the name of one of the games. The Angoni call the counters *mamba*. The holes in the board or in the ground (Pl. XXII, fig. 11) are called *iputa* (sing. *chiputa*) from *ku-puta*, to strike, beat, or put down with a thud, to "plank down," and refers to the way the counters are "planked down" in the holes on the board when playing. The large container at the end of the board is simply to hold the counters out of play and is called *nyumba*, "the house," or *kinimbo*, "the hole." The counters are [171]

[1] Meredith G. Sanderson, 'Native games of Central Africa,' (Journ. Anth. Inst., 1913, vol. 43, p. 726-736).

524 called *heme*; *mahemo* or *nambemo*, the words given by Dr. Sanderson, are not known to the Yao in this district. There is a simple game played among the Anyanja children and therefore called *chiana* (childish or for children), but the common game played is more difficult as shown by Dr. Sanderson. *Mchombwe* is being partly displaced by a Swahili variety [177] called *bou*, or often by the Yao, *ubou* (Pl. IV, fig. 4). I may here also point out that the words *nesses* and *nasle*, which Dr. Sanderson uses for the Manyanja and Angoni varieties of the game, are often replaced by *mfuwa* and *tsore*.

857 Yao children play at keeping house in little grass structures, made near the village or in the fields, while their parents work. Children who can only toddle may be seen practicing dancing the steps of their elders. The boys play with miniature bows and arrows made of a kind of grass, *sewe*, and make a toy dart-tube, *uti* (Pl. XXII, fig. 5). Little dug-out canoes eighteen inches long are made for them to sail in pools.

857 Among the lads in a village, games of fighting are much indulged in; two sides are op-
526 posed and their weapons are of various kinds. Sometimes each is armed with a length of bamboo, into the hollow end of which sand and pebbles are put, representing powder and shot. This end of the bamboo is then rapidly swung in the direction of the "enemy" and will discharge the sand and pebbles into the face of the opponent. This is called *uti ja mwanga* ("gun for sand"). The boys are sometimes armed with maize cobs for throwing at each other.

Chinene is another form of fighting. Armed with a collection of small stones, each flicks his stone at the enemy with very good aim, using the fore-finger of the right hand to propel the stone, the index of the left hand acting as trigger and the left thumb as the spring. The name comes from *ne!* the sound of the whizzing stone as it goes through the air.

In a pool opposing sides fight with rudimentary syringes made of bamboo, driving streams of water into each other's faces. This is called *ipierere*, from the sound of the stream of water, or *uti ja mesi* ("gun for water"). In the water they also play *chitwinyichiapa*, (*ku-twinyichiapa*, to press down). Boys are ranged on two sides; each tries to "collar" one of the opposing side and put him down into the water, holding him down between his legs. An old water trick is for a boy to go down to the bottom and there squat with his face turned upwards, the mouth stretched wide open by the fingers; viewed from the surface the face looked flat and very grotesque. There is also diving for cassava, *chitiwilila* (*ku-tiwilila*, to dive for).

A kind of skipping, called *chiseese*, from *see! see!* the sound of the rope as it goes round in the air, is a great favorite. A man with a heavy rope about fifteen feet long, with a bundle of grass at the free end enclosing a lump of heavy wood or stone, swings it round and round his head. The faster it goes, the higher it will fly out, while the boys in turn run in and jump over it. Sometimes a boy is caught by the rope and gets a nasty blow, occasionally resulting in a broken limb.

3: Stannus D-5 (ca. 1912) 1922 FT7 Yao FT7

Taking advantage of the natural inquisitiveness of youth, a favorite trick for making money is for a man to appear in a village making pretense of having a peep-show, something contained in a covered basket or in a cloth. On payment of some small amount, the youth is allowed to peep in, maybe only to see a dead mouse; finding he had been "done," he of course bursts into laughing and, anxious that all his companions should also be "done," he does not "give it away" and so the peep-show man makes quite a good living. 857 673 543

Yao girls play with dolls of two kinds, *lilele*, made from little gourd-like fruits called *lilenge*, and others called *mwanache*, "a child," made from maize cobs. These dolls they carry about on their backs as mothers do their children. *Lilele* is made of three of these little spherical fruits glued together with beeswax; on the one which represents the head, seed, red and blue, of the *ulenguige* tree are cemented in rows to represent hair, and often beads, as in the *nchache* method of hair-dressing. One sees similar dolls made for the children of other tribes. Thus, among Mombera's Angoni, a doll called *mwana*, "a child," is made in a dumb-bell form of two small spherical gourds joined by a bundle of sticks bound together with string and wax; on the head-piece string is cemented to represent hair. Their children also play with little clay images of cattle and men, a custom they have preserved from their old Zulu ancestors but foreign to the Yao. The Ankonde children have carved wooden dolls not seen in any other tribe. *Mwanache* is made from a maize-cob by shredding the papery coverings of the cob; on these shreds are threaded white and red varieties of maize to represent beads, or the shreds are plaited into a number of tags to represent hair. 857 524

Latterly, the children have taken to making hoops and show considerable skill in driving them with a piece of bent reed (Pl. XXII, fig. 8), while the older boys make two-wheeled representations of bicycles with a very clever imitation of all the parts of the machine. [m]

The whipping-top, *nangulya* or *nangwape* (*ngali*, Chin.), is found among the boys' toys. It is made of a conical piece of wood with a flat top and no metal peg. It is started spinning by pulling off the string wound round the top. The whip consists of a piece of string fastened to the end of a stick. Sometimes tops of large size are used, and two boys whip them from opposite sides (Pl. XXII, fig. 6).

A game called *chiputa* is played by youths; it takes its name from *ku-puta*, to strike, and refers to the action of striking with a finger the hand in which a bean is guessed to be. A spiral is drawn with the finger in the sand with a central point to represent a village, and a tail-piece prolonged on one side to a second point which represents a slave-market on the coast. Along the line, a number of other points are demarcated to represent sleeping places *en route*. At the village, two white beans are put to represent the two players and with each is a smaller brown bean to represent his slave. At the slave-market are placed a variety of beans to represent trade-goods, calico, beads, etc. Each of the two players in turn shakes a single bean in his closed hands and then closes the hands, separating them at the

3: Stanmus D-5 (ca. 1912) 1922 FT7 Yao FT7

857 524 same time so that the bean is contained in one hand; the other player has to guess in which the bean lies and this he does by striking with the finger the hand in which he imagines the bean to be. If the striker guesses correctly, he moves his man and his slave to the first sleeping-place. It is then his turn to hide the bean. So it goes on till one or the other arrives at the slave-market. Here he barters his slave for trade-goods and returns in the same way; whoever gets home first wins, and the loser is said "to have died on the road," a not uncommon event in the old days. It is interesting to note that cheating is sometimes attempted [788] by palming beans between the fingers, so that in the hand guessed, the bean is palmed between the fingers, and, in the other hand, a bean is released from between the fingers into the palm.

526 *Njenge* (*nsibwa*, Chin.): a kind of ninepins, which takes its name from the object which is thrown to knock down the ninepins. The game is played by youths and men, equal numbers sitting in two parallel rows fronting each other on the ground, the two rows composed of a dozen or more persons, a few yards apart. Each person has set up in front of him on the ground a maize cob from which the grain has been stripped, or each may have a number of them, perhaps six. In the former case, the cobs are perhaps two feet apart, in the latter only a few inches. Each player is provided with several *njenge*, from six to twenty-four in number. The *njenge* is a piece from the side of a gourd, slightly concavo-convex and circular in plan, with the edge often cut into serrations. A piece of reed is fixed through a hole in the centre, projecting an inch or an inch and a half from the convex surface, thus forming a kind of teetotum, two or three inches in diameter (Pl. XXII, fig. 9). It is held between the thumb and second finger by the foot-piece; by a sharp movement of the fingers, it can be spun out of the hand and, at the same time, jerked forward by another sharp movement at the wrist. At a given signal, the players on both sides start launching forth their little tops which spin away towards the maize cobs of the opposing side, the object being to knock them down. When there are many on a side, each with a number of cobs, many fall with the first onslaught, but as fewer and fewer remain, it becomes more difficult, and players try to show their skill by aiming at the cobs farthest away from them, along the opposite line. The game goes on till only one cob is left standing; then, if a player of the opposite side knocks it down, he puts one of his own up again, and the side which had the one remaining puts one up, and so the game may go on. When they are tired of playing, they say, "*Kwisale tunaye*," "We must finish the game," literally "Come on, we must smell."[1] A knife is then stuck in the ground on either side, the blade pointing to the opposite side, and each man, when he has hit the knife of the opposing side with his *njenge*, is considered to have shown his skill, and goes off. The last man remaining is laughed at as being a fool at the game. If a headman is playing, he makes sure of having his try first, so that he will not be left in to the last. The game has a great fascination for the natives and it is said of Malemya, the uncle of the present chief (1913), that he was

[1] Vide supra, p. 357.

3: Stannus D-5 (ca. 1912) 1922 FT7 Yao FT7

526

so enthusiastic a player that if anyone wanted to make a joke at his expense, he would snap his fingers, imitating the action of throwing the *ujenge*.

524

Chipulapase: a Mang'anja game now played by the Yao which takes its name from *kupulapase*, to scratch as a fowl does looking for food. The words used in the game are all Chinyanja. A number of beans, perhaps twenty, are put down in a row at intervals on the ground. One player manipulates the beans, while the other has his back turned so that he cannot see. The first player calls, "*Chipulapase chipulapase!*" the second answers, "*Mwana khanga* (child of a guinea-fowl)." The first then says "*Nanga apa!* (What about here?)", pointing to the first bean; the second player answers "*Tolani!* (Pick it up!)." At the second round, the first player having picked up the first bean, points to the place where it was and repeats his cry, but at the words, "*Nanga apa*," the second player has to say, "*Palibe!* (There is none)." Then he comes to the second bean and says, "*Nanga apa*" and the second player, knowing that he has come to the second bean, answers, "*Tolani!*" When three, four, or five beans have been picked up, the first player asks three, four, or five times, "*Nanga apa?*" and the second player to each question should answer, "*Palibe!*" and then, when the first player points to a bean and not to a blank, the second player should know that he has come to a bean and answer, "*Tolani!*" instead of "*Palibe!*" When played quickly, it is not altogether easy to answer correctly, as the end of the line of beans is approached.

Chiputa cha mapala (to strike with the hand) is played with four pebbles or beans. Starting with two in each hand, the fists are closed and then making similar movements of throwing from each hand, two are thrown from one hand, or one from each as the case may be, as a sleight-of-hand. One of the two thrown on the ground is then taken up in each hand, and the guesser has to say in which the three are. This he indicates by striking the hand with one of his fingers. This game has many variations.

857 524

Chintatata: a game of jumping from a big rock over a fire. Before jumping, the boys sing, "*Chintatata chintatata eeh!*"

526

Chindonondona (*ku-tona*, to pinch): each of a number of boys loosely pinches hold of the skin of the back of the hand of his neighbor, one hand above the other. They then sing:

"*Chindonondona chindonondona, ssikitule!*"
"Pinch Pinch, cut asunder!"

At the word *ssikitule*, everyone should break away while digging his nails into the hand beneath his. Some one of them is sure to have had his attention distracted and forget to pinch hard, while he himself receives a pinch hard enough to make him jump.

Running races, each boy hums a note:—"um . . . m," each one in a different key. Anyone changing his note is disqualified.

524 857

Ipuse: a number of stems of a reedlike grass with long joints, or small millet stalks are bound together by their upper ends. The free ends are heated in a fire, then banged down

524 857 on a stone. They explode with a noise like the sound of a gun. The boys send them off, one after the other, imitating fighting, or sometimes bang them down on some one's head. They go off, making the sound *ipeuo!*

Small boys or girls among themselves play a clapping game called *pyajila*. One sings:

[539] "*Pyajila pyajila, pyajila pyajila, pyajila pyajila, jwanpere mangi'jo pa mlango pa' mao!*
"Sweep sweep sweep sweep sweep sweep the one who has passed excrement the at the door at his mother's,

Napumbe, kama, kawili!" etc.,
let him clap once, twice!" etc.

They all clap together at the word "once," "twice," and so on. No one knows how many times they are going to be called on to clap, and some one is sure to clap when no word is given and so is caught and made fun of, as the one who has misbehaved.

[152 RD] *Likwata* (*ku-kwata*, to clap): simple clapping when pleased with anything is commonly indulged in, mostly by women and girls.

Little girls play at making little pots. This is called *gumbaiwiga*, (*ku-gumba chiwiga*, to model a pot). They also play at pounding grain, called *chindichi*, "learning to keep time," the word itself being an imitation of the sounds. Five or six pound in one mortar; in between strokes, they throw the wooden pestles up in the air, catching them again to time.

[539] "*Jutapikule katuli jo! ajo mawi jo akulopa!*"
"The one who upsets little mortar the! that one witch is bewitching!"

This is the song of a game played by little girls. One sits in the middle with a *singwa* on her head, to represent a grain mortar, while the others form a ring round her holding hands. As they sing, the circle at one point swings in, and one of the girls passes in front of the one sitting down, her back to her all the time, the hands passing over her head. This they do one after the other very quickly and anyone who touches the girl in the middle, "who knocks down the mortar," takes the place of the girl in the middle.

[539] "*Asanowangu Asanowangu ajahati mbo!*"
"Our wives, our wives, cutting off (interjection)!"

is the song of a game played by a lot of boys together or a lot of girls together; they do not join with one another. Two opposing groups are formed of equal numbers. Each is led by one of the older children and behind him is the rest of the group, each holding on to the cloth of the one in front. The followers of each leader represent his wives. The two parties then sing and maneuver for the leader to get at the tail of the other group and "collar" a wife or two from his opponent. It becomes very exciting. As they go faster and faster, some of the tail may get swung off and captured by the other side before they can again join their own.

3: Stannus D-5 (ca. 1912) 1922 FT7 Yao FT7

Trapping and catching of animals is pursued with great glee by small boys. They make many of the traps, particularly the two kinds of *hiluo*, *chipoto*, *chijumba*, *chilowa*, *liwowe*, and *ngwu*. *Lilesa* is set in rat runs and the rats are driven into them (Pl. XX, fig. 6). Digging-out rats is a favorite amusement for the boys and brings meat to the pot. May is the best month for this sport. They are adepts at recognising burrows which have rats inside. Digging is commenced at one entry to the rat-warren, the escape holes being closed with tufts of grass. As they get nearer the rat chambers, they smell the earth and so know when they are quite close to the rats. A bunch of grass is then put in this hole, lighted, and kept aglow by blowing on it. One of the rats will try to bolt and is knocked on the head. His head is then squashed to kill him effectually, and the skin of the tail of the first rat is always pulled off for luck, "so that they may catch many." They will try to guess how many there are going to be, "ten and ten and five and two!" Each rat when caught is buried under some earth, so that the hawks will not swoop down and carry it off. When they have finished one warren, one of the party is appointed to carry all the rats. He ties a string round his waist, and the rats are slipped underneath it and so secured. They then go on to another; the carrier will bear the whole catch for the day and may, before they have finished, have several strings of rats round his body, one above the other. 224 857

Digging-out crabs, *ku-kopa ngala*, is another favorite amusement for children; (*ku-kopa* is to dig up anything like mud which makes a squelching sound). Crabs are never eaten with flour, but always with *masete*, the grain husks, "crabs and brown-bread!" 226 857

Youths and girls fish with a rod, line, wire hook, and worm, *ku-lopesya somba*, to pull up fish. They also catch fish, using the fish poison, *mtutu*. Birds are killed with a bow and a blunt-pointed wooden arrow. [223 411]

A small boy, seeing a girl or a younger boy with a cob of maize and wanting it himself, will say, "Let me make a path to the coast!" He will then remove, say a couple of rows of maize grains for himself, much to the interest of the owner; or "Let me make *ilemba*" (*ilemba* is a shaved band on the scalp), or "Let me make the crab's eyes!" when two solitary grains are left, surrounded by a simple ring of other grains, as the girl's portion. 857

Children are taught a little saying about their fingers which reminds one of the "This little pig went to market" of one's infancy. Starting with the little finger, they say: 857 524 539

> "*Akaka kangateka kangateka!*"
> "This little one (is) the one which cannot draw water!"

Pointing to the ring finger,

> "*Kankulugwe njungunda!*"
> "This little one's brother (is) the one that picks the nose!"

To the middle finger,

> "*Njungunda nwala wandu!*"
> "(The brother of) the one that picks the nose (is) the one who finishes men!"

3: Stannus D-5 (ca. 1912) 1922 FT7 Yao FT7

857 To the index:

524 *"Lukungulu luwa ng'ombe luwa luwandala uwilumbu!"*

539 "(This one is) the leg of an ox which walks on the plain!"

To the thumb: *"Chamanna"*

"The fifth"

857 *Cat's Cradles* are known as *chitapwu*, "the spider's web" (Pl. XXIII). The position
524 of the string on the hands is as in Position I of Miss Haddon's book and this is followed by Opening A, given by the same author.[1] (Pl. XXIII, figs. 1, 2.) Three methods of arriving at the same figure, which is called "the net," are shown here (Pl. XXIII). Variety C is followed by the making of a knot, figured in C 12, known as "the child." There are probably a number of other forms made by natives, but these, which I saw one of my women patients make, will serve as an example.

534 **Musical Instruments.** The number of instruments proper to the Yao appears to be small, indeed probably only two in number, the *mangolongondo* and the *chilyatya*, with perhaps the three holed flute, *chitolire*.

The former is constructed on the principle of a xylophone; it consists of two trunks of banana trees laid on the ground and held in position by stakes. They are not quite parallel but approach each other somewhat at one end, being from one to two feet apart; on these rest cross-wise a number of pieces of wood of varying thickness and length, kept in position by pegs driven into the banana trunks on each side of each billet. These are struck with sticks by a single player, or by two persons sitting on opposite sides of the instrument. Another variety is found in which the pieces of wood, which may have holes bored in them to effect differences in sound, are arranged over a hole scooped in the ground (Pl. V, fig. 1).

The *chilyatya* consists of a piece of plank hollowed out to form a resonator on which are fixed a number of keys of bamboo or metal of different lengths. These are arranged across a bridge, and the free ends are set in vibration by twanging with the fingers.

[177] The instrument now most commonly seen is the *sese* which was introduced, I think, from the coast about 1890 to 1900. It is a type of guitar.

An instrument played by women — and this again is of recent introduction among the Yao — is the *mkungulu*, which consists simply of a stick of wood about a yard long to which is affixed a single string. One end is held between the teeth, the other in the hand; it is twanged by being struck with the thumb and finger of the other hand close to the mouth, which is opened to different degrees, and gives a variety of notes resembling those of a jews' harp.

The *ching'wengeng'wenge* and drums are referred to under *Dancing*.

[1] Kathleen Haddon, Cat's cradles from many lands, New York, 1931.

3:Stanmus D-5 (ca. 1912) 1922 FT7 Yao FT7

Women stick on a small spit a pretty green and white beetle, one of the *Cetoniidae*. The free end of the spit is then held between the teeth. At different positions on the stick, the buzzing of the impaled insect gives rise to different notes. The beetle is named *chingwangwanga* or *chiumuwu* (*wangalire*, Chin.). The wing-covers of another beetle, *matchetache*, a *Lamellicorn*, are used by women for the making of a musical instrument. The wing-covers of some twenty of these insects are threaded on a string arranged round the shoulders and feet of the player as she sits on the ground. The string on each side, as it passes from the shoulder to the foot of the same side, is plucked by the fingers of the opposite hand, different notes being obtained by different degrees of tension put on the string by pressure with the feet. The wing-covers give a buzzing quality to the notes which all natives like. 534 237

Mention should also be made of the horn, *lipenga*, commonly made of a long piece of reed or bamboo with a trumpet-shaped end, made out of a portion of a gourd. Antelope horns are also used. The horn is blown on journeys. [484]

Dancing. Dancing among the Yao, as among many other peoples, is the outcome of the pleasure experienced in rhythmical movements. The first accompaniment was probably the clapping of hands to mark time, followed by some exclamatory sounds more or less prolonged and occurring at regular intervals. Later, there was probably some refrain and, later still, drums were added to mark time, and songs formed an additional accompaniment. I believe that, here, dancing has always been an expression of pleasure and happiness and has been secondarily introduced at many ceremonies. In the majority of cases, such ceremonies were occasions of joy, the only exception being at funerals, but there I think their introduction was rather as a means of passing the time and avoiding silent brooding than as any real part of the rite. 535

The names given to various dances indicate their time or rhythm, and are, therefore, comparable to our own words, waltz, two-step, etc. There may be a number of airs for each time, and many sets of words to each air. The time may be given by clapping only, or by the addition of drums. Anyone acquainted with these dances, hearing drumming in the distance, can at once recognize the dance that is going on.

The drums which are used at dances (Pl. XXII), are made of a hollowed-out log of wood with a skin tambour stretched over the mouth of the drum and fixed by wooden pegs. On the tambour is smeared a layer of beeswax. The tambour is tightened by warming over a fire, so that the correct note is obtained; a fire is always kept burning close to the spot where drums are being played. 534 535

Lihuti: a drum shaped somewhat like a native flour mortar, three to six feet high with the tambour one to two feet in diameter. The drum usually lies on the ground, the player sitting on the barrel of the drum, or he may have it suspended from him by a cord, the body of the drum dragging on the ground between his legs. It is played with both hands and gives a deep, resonant note, "*ti, ti, ti!*" (Pl. XXII, figs. 12, 13). 534

534 *Ntgunigu:* like *likuti*, but played in a different way, giving the sound "*tpu tpu tpu!*"

Mahose: the same as *likuti*, but with a higher pitched note. This can be produced by heating the *likuti* drum over a fire.

Chichoma or *lingoshe:* a small drum eight to ten inches high, held in the hands by strings on either side, in the same way as a concertina, and pressed against the chest while being played with the fingers. It may be alternately pressed firmly and lightly against the chest, giving variety in timbre. The base which rests against the body is cut down into a kind of foot-piece (Pl. XXII, fig. 13).

Chinpunga: a small drum eight to ten inches high, rather goblet-shaped with stem and base, the circumference about equal to the height. It is beaten with two sticks, "*ngunpunga ngunpu!*" (Pl. XXII, fig. 17).

Chiminingo: the same drum played with two sticks, "*mini, mini, mini!*"

Ndimbe: a small three legged drum about the same size as *chinpunga*. It can be carried in one hand and played with the other. It is used with one stick or more, in place of *chinpunga* and *chiminingo* (Pl. XXII, fig. 16).

Meivu: an old drum not now used. It varied in size from one to four feet long, was suspended from the neck, and played at both ends (Pl. XXII, fig. 14).

It is very difficult to give any idea of the time and different sounds the drums give. People learn them by repeating the sounds the drums make thus: *Ndi dta di ntlpdi ndi dta di mini mini ntlyi ntlyi*, etc. Several drums, often six or more, are played together, each contributing its element of sound. They are often played very fast, but the time kept is most exact.

535 Dances are ordinarily performed by everyone in a village, but there is always a leader. Or again, there are trained bands of dancers who earn their living by attending ceremonies or any festive occasion. In a few cases, the dances are only danced by professional dancers. A short account is given below of many of the Yao dances.

Likwata: (*ku-kwata*, to clap the hands). No drums are employed, but the time is kept by clapping. In some villages, drums have lately been introduced. It is a common dance in a village on any moonlight night, just for amusement. Women and girls take part. Standing in a circle, they sing and clap, while any who wish, go into the circle, perhaps a dozen at a time, and dance their shuffling steps. A song which is included under *likwata*, is a representation of the dung-beetles (scarab) rolling the little balls of dung to their nesting places. The women shuffle backwards or forwards, like the beetles, one pushing and one going backwards pulling. As they dance, they sing:

[536] "*Likwa, tuti tuti!*"
"(oh little) dung-beetle, push push!"

Refrain:

"*Likwata mangi!*"
"It is rolling dung!"

3: Stanmus D-5 (ca. 1912) 1922 FT7 Yao FT7

Chindimba: the *chindimba* songs are the favorites among all the older people. They have been in late years partly replaced by others, but, at the present time, there is a tendency to return to them; they are staid in tone and the dance is sedate. *Chindimba* is always played at mournings. While the whole company sits around in a circle with the drums at one side, a couple of people do the dancing in the middle. The drums used are a *chingungu*, two *ichoma*, and a *likuti*. With the commencement of drumming, a man well known for his songs steps out into the middle and begins singing; he is followed by another man or maybe a woman who sings a second part; the two singers are generally people who have found that they sing well together. Two such people will be welcomed, and they may sing many songs, while any young upstarts who do not sing well together, will be given to understand that their performance does not meet with approval. People have their favorite songs, and there may be much heart-burning if an old man finds some one else singing a song that he considers especially his own. As they sing, they dance their peculiar shuffling steps. (The words of some of these songs are given later.) 535

Solepa: an Anguru dance sometimes danced by the Yao. It resembles *chindimba* in that all sit singing and clapping while, one at a time, men dance in the open space to time given by bamboo sticks knocked together. The songs are all hunting songs.

It is impossible to describe the steps used in all the dances; for each dance, they differ, of course, and except by a cinematograph film, they cannot be reproduced. The movements of the feet are ordinary stepping motions or patting of the ground with the feet, the actual excursions being very small, so that in most cases it is impossible to devise any means of making out the steps. To enable them to perform these steps, they commonly dance with the knees bent, the buttocks protruded behind, and the back arched. In some cases, this attitude is extreme. [516]

There is a larger series of dances which, to the uninitiated spectator, appear to resemble each other very closely. The general plan of the dance is as follows. The drums are placed in the middle; around them in a circle are the dancers and outside these, the onlookers. The circle may be thirty or forty strong, composed of men only or of men and women as the case may be. Commonly, the ring of dancers is divided into two halves, each half being headed by a leader who sings the song, all joining in the refrain, while the onlookers do the clapping. When the drums begin, they all walk round in a circle, but at a given signal, one of the drums gives out a new time, and the whole circle starts dancing with short, shuffling movements already described, usually progressing in the circle, sometimes going backwards, sometimes facing the drums or turning right around in the line.

Mkomanda is a dance of, I believe, recent introduction which has replaced to some extent *chindimba*, much to the disgust of the older people who dislike the innovation. They shake their heads and say, "*Chilambo chimaliki!*" "The world is finished." The drums used are *likuti*, *ntipatipa*, *mchesa*, and *chingungu*. It is danced by men and youths only. [517]

Njoda or, as it was known some years ago, *ngumbuli*, is danced like *mkomanda*, but the

3:Stanous D-5 (ca. 1912) 1922 FT7 Yao FT7

535 steps are accompanied by movements of the shoulders which form the feature of the dance. Performers may go into the middle and do *ku-pumila* (see *mkwede*).

Mlosonde resembled *ujenda;* it is an old dance not seen now.

Chihonde is a dance for youths, the characteristic feature being that, at intervals, they squat down on their heels and spin round very fast, with frog-like movements (Pl. III, fig. 1).

Mkwede is a favorite dance for men and women; drums, *ikwati*, *ndipatipa*, *mukwa*, *chimwinange*, and several *lingoko*. The dancers commence by going round in a circle, and then, facing the drums, they all continue their steps without moving from their places, while a few go out into the circle and dance in the open space about the drums. Two men go out from one side and are met by two women from the other side. Men love to carry their knives in their hands on these occasions, properly the large knife with an ivory handle called *mwinje;* a man would go miles to borrow such a knife from a friend, for the dance. The women often carry rattles in their hands. After dancing in the middle for a time, they will severally withdraw to the circle, to be followed by others. A man dancing out into the middle, may go up to any woman in the circle or among the onlookers, and by touching her on the shoulder with his knife, invite her to come out and dance. In the middle of the ring, he may embrace her, after which each retires to his place. To make this embrace is called *ku-pumila;* the man folds the woman to his breast. It is very gently done with a certain air of gallantry, and there was formerly no objectionable element in it. A man does not extend this embrace to his wife or to any near relatives. *Ku-pumila* occurs in other dances: *chihonde*, *chikwa*, *mirujuu*, *ujenda*, *mkanda*, *masambala*, *akibile*, *lisiipi*, and *lipupa*, and in *mkwa*.

Chikwa: the drums used are *chimwinange* and *mukwa*. It is danced by young men and women; as in other dances, a ring is formed, the men on one side, the women on the other. The song is usually started by two men on one side and answered by two women on the opposite side. When the song is well under way, the drums are signalled and all start dancing in a circle. Movement in all dances is counter-clockwise. After circling round, the dancers come to a stand-still, while men and women go out into the middle and dance a kind of quick heel-and-toe step, followed by *ku-pumila*.

In the intervals of dancing, the girls and boys often play at *mkwa*. They may stand or
535 sit in a ring. One of the boys standing in the middle sings, "*Ikwa mkwa, mkwa mwele,*
857 *mkwa!*" with an accompaniment of clapping by the ring of youths, but no drums. He then goes up to any girl sitting in the ring and asks her whom she wants; she names some one who is then called out, and the girl and boy dance up and down together, embrace (*ku-pumila*), and return to their places. Another girl is then asked. Sometimes the girls will take up the song, and ask the boys to choose. It is like a kind of "kiss in the ring."

There is another kind of dance for boys and girls. They are arranged in rows opposite one another, some paces apart. The boys grasp a long pole and bending forward, dance up

3: Stinson D-5 (ca. 1932) 1922 FT? Tao FT?

to the rear of girls, singing, "*Anambenda ndendai*" refrain, "*Mapendai*" (*ku-penda*, to give). Leaving the pole at the girls' feet, they retreat, after which the girls take it up and advance to the boys in the same way. 535 857

Chibiro is danced rather like *ndemanda*. A group of men dancers go round in a circle, and within this circle may be a line of women dancing to the same time but with rather different steps than the men. This I have seen danced by a trained band of dancers, but onlookers join in. A man may lead a woman into the middle and embrace her. There is a tendency among these trained dancers to forsake the old time stately embrace for something which is not so unobjectionable. 535

Lichipi is a new dance, but one that is well-liked. The drums are as in *ndemanda*. Men, women, and young people dance in a circle followed by entry into the middle, and *ku-pendo*.

Mbanda is danced by men on one side and women on the other side of a circle, to drums *mdumu*, *ndimba* and *mangala*. Any of them may dance out into the middle after going round in a circle.

Lipapa is an old dance for the older men and women. Like *mbanda*, the steps are slower and are characterized by side-to-side movements.

Mtikumpa: drums, *likuti*, *chingumpa*, and a *mdumu* drum called *mbikiko*, because it is so played as to give the sound "*mbikiko*" It is danced by men in a crowd. While the feet do little, shuffling steps, the buttocks are jerked out backwards and forwards.

Chandamali: a dance of recent introduction resembles *ulali*.[1]

There are three dances which are danced by special dancers.

Mlinjusu: the same as the *mimbo* of the Anyanja,[2] generally danced by four men who wear a kind of kilt made of strips of palm-leaf, and rattles, *mamun*, on their legs. They may also wear the *lisuya*, a headdress made of the tail-feathers, *usupe*, of the *chimpa* bird: it is like a broad hat-brim without a crown, the feathers projecting radially. The *mbanda*, a piece of a shell which comes from the Zanzibar coast is also often worn (Pl. III, fig. 2). The drums which give the time are *chimimiaga*, played very rapidly indeed. The steps are incredibly fast, with greater excursions than in the other dances, and usually end up with a jump into the air and a pose with grimacing. A circle is formed round them by the young people who, in the intervals, walk round singing and clapping. The dancers may call out any girl for the embrace. [292]

M'ungu: danced by two or three pairs of men who wear the palm-leaf kilt, *mamun*, and a broad, bark-cloth belt called *chamba*. When the drums start, these dancers walk round the circle of onlookers, and get the song going, and the clapping to time; then with a signal to the drummers, they start dancing alternately an extremely rapid dance with rattles in the hands, *mungu*, and a kind of *danse-du-ventre*, *chamba*. The drums employed are *mdumu*, *ntipatipa*, and *chimiallipa*. The rapid dancing is too exhausting to last more than a few seconds. This is always danced at *Lepanda*. [292]

[1] Cf. Stinson, "Notes on some tribes of British Central Africa," op. cit., p. 324. [2] Ibid.

535 *Ching'ongong'ongo:* A soldiers dance about, playing a single-string vid with a bow as he sings. His songs are all about people, village splendor full of personalities and many witticisms. Kondoni of Mahenye's was a well known performer (Pl. I).

533 Songs. The following are some of the *Chimdindo* songs:

539

1

1st voice. *Kutumbila ungano ngumbo nehulumbo ungano hengo!*
To be angry the owner of the house strangers they deep where!
2d voice. *Kutumbila ungano ngumbo Che Nhlaba ningiyo.*
To be angry the owner of the house (Mr.) Nhlaba I shall die.
1st voice. *Kumbungo wumi wululwe,*
To ask me to answer lies you.
2d voice. *Kumbungo wumi Che Mwengo,*
To ask me to answer lies master,
1st voice. *Alawa ningumbo ipuyo,*
Brother-in-law I will go then,
2d voice. *Alawa ningumbo ipuyo.*
1st voice. *Aumbo wumulu ngulo nehulumwe.*
There (go) the children they go on all fours.
2d voice. *Oh lele'je ningiyo.*
Oh today I shall die.
Chorus. *Kutumbila ungano ngumbo!*

The burden of the song is: We see we are not wanted here; better we went away!

2

1st voice. *Ah Ijimo'wo kulo kulo ingulu nimpumbuje lele'je!*
Ah baboon there jumping jumping to enjoy he is going to enjoy today!
2d voice. *Ah Ijimo'wumi ingulu nimpumbuje wumumulu!*
Ah the baboon there to enjoy he is going to enjoy child!
Chorus. *Kulya nehumb nga ngumi!*
to eat (meat) pods of dryumi!

"Small pods of dryumi" is also referred to in a story of the baboon. When he is dozing at night sitting on a tree, he hears a seed-pod in the neighborhood crack, and wishing to mark the spot, so that he may go and eat the seed in the morning, he stretches out one arm in this direction and goes to sleep again, to be awakened by the sound of another cracking pod; whereupon he puts out another limb to mark that spot. Presently, he has all but one limb including his tail set out as sign-posts. Half awake he starts to put out the one remaining limb, and falls off the tree.

533
539

3

1st voice. *Atindili* ndututo ngungu pdde ejo ndudulusu,
potatoes gulum food ah! thank you you,
2d voice. *Atindili* ndututo chundunde atiyuna'ne nungu.
potatoes they are selling me Atiyuna there is going away home;
Chorus. *Kwende, ndudulili!*
Remove the box from its handle!

The name of any person may be introduced into these songs, sometimes the name of a number of the village or of some person well known in the district. To introduce a name thus is *ku-bumba*. *Ejo!* is an exclamation of thanks; when receiving anything, both hands are held out, and the words *ejo, ejo, ejo!* or *nungu, nungu!* are uttered.

4

1st voice. *Mdudunde 'pdde nundu ngudugudu ngunungunde ngunundu.*
The millet have eaten lounts you place did not plant not.
2d voice. *'Ndde nundu ngudugudu ngunungunde ngungu, ntati, ngunundu!*
Have eaten lount you place did not plant rice, father, not!
2d voice. *Ngudugudu ngunungunde ngungu, ntati, ngunundu!*
1st voice. *Ngudugudu ngunungunde ngungu, ntati, ngunundu!*
Chorus. *Mdudunde, pdde nundu!*

Mdudunde: after the first crop of millet has been taken in, the stalks are cut off near the ground and the roots allowed to remain in the soil. Next season, they again sprout and yield a second crop. This second year growth is *mdudunde*. [241]

5

1st voice. *Mnindu n'dinguundu dide dide didee dide dide!*
Lions in the palm-trees at night, etc.
2d voice. *Mnindu n'dinguundu, lundu lilundu Atiyuna! Tinjiwe dide dide etc.*
Lions in the palm-trees to sing lilundu *Atiyuna!* I shall die tonight, tonight, etc.
Chorus. *Mnindu n'dinguundu!*

Lilundu is the name of a dance, *Atiyuna* is a woman's name. Cf. "Let us eat, drink, and be merry, for tomorrow we die."

6

1st voice. *Ndundu, ndundu, ndundu!* Repent.
Tuning, tuning, tuning!
2d voice. *Ndulinge ddundu lundu, nundundu'nu, ngundu!*
If you have tuning tuning, me tune me, I am going away!
Chorus. *Ndundu!*

7

533
539

1st voice. *Wahundaga'wale* *ounu/* *ahokolotunde*
The one whom we were talking about, have he is! that thing which happened some-
ninehou/
time ago, the day after tomorrow!

3d voice. *Aliyanu* *ounuje* *ahokolotunde,* *ashin/*
(a name) is going that thing which happened some time ago, I am off!

Chorus. *Kunpe* *ogide* *ounu* *ounu'wale/*
You give milk who has lies (lied to) you!

The meaning of this is: "If a man comes along who has done you an ill in the past and is just as likely to do so again, should you be inclined to reward his lies by giving him hospitality? Better to go away and leave him alone."

8

1st voice (male). *Kopolde'ke* *kowale,* *ahojoyuno/*
The little lip ring that, come and wash it! Repeat.

3d voice. *Kopolde'ke,* *wonyonyo,* *kowale ahojoyo* *loke/*
The little lip ring that, you folk over there, come and wash them today!

1st refrain. *Kotolotunde* *ounu/*
Lest it turn into bumble-bee honey!

1st voice (female). *Aoki* *ndwu* *ogun/*
What about beard your? Refrain.

3d voice. *Aoki* *ndwu* *ogun ainil?*
What about beard your father? Refrain.

3d refrain. *Kotolotunde* *ondude/*
Lest it turn into *ondude/* (part of a maize ash).

9

1st voice. *Ashinbokke* *onki/* *ndunda/*
Why are you crying oh! the cause?

3d voice. *Tinpunide* *hunonpuno'ke/*
I will take her to her own home there!

Chorus. *Kunojide* *ogoje/*
I am going to look for bone!

This refers to a troublesome wife. "Let her go back to her mother and the husband will go about his own business."

10

1st voice (woman). *Ukundudupe* *wodolin* *ni ogoji* *ahibokpolo'dai*
If I were not discouraged then I would have been still trusting! Repeat.

3d voice (man). *Ukundudupe* *wodolin* *ni* *ogoji'ne* *kotobou/* *kotobou/*
If I were not discouraged then I should have been crying bone! bone!

Kotobou *kotobou* *kotobou* *ashoun/*
Bone, bone, bone, dear me!

3: Stannus D-5 (ca. 1912) 1922 FT7 Yao FT7

142
242
534
301
516

CHIEF WESTERN WENYE

[End Plate 1]

142
291
301

1

2

3

4

YAO SUPPER

[End Plate 2]

3: Stannus D-5 (ca. 1912) 1922 FT7 Yao FT7

535
534
291
301

323
415

3. Photographs, taken with kilt and lad bottle

4. Photograph

857
535

5. Bangle with number Chinese

6. A group of Yao at a dance

[End Plate 3]

3: Stannus D-5 (ca. 1912) 1922 FT7 Yao FT7

524
322

2. A BIT OF YAO LAND

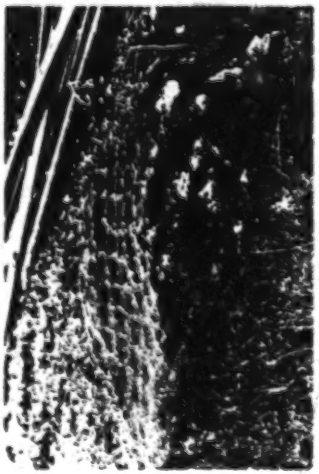

4. GRANITE WORKED WITH CUP-HOLES FOR THE GAME OF *Bao*

346
531
177

1. A MOHAMMEDAN MOSQUE DECORATED WITH GEOMETRIC DESIGNS OF COAST GRASS

3. A SPRING AND NOOSE TRAP FOR SMALL ANIMALS

[End Plate 4]

534

291
357

1. Musical instrument, the mapolompolo, played by Yao youths

2. A Yao as a native servant

304

142
301

3. Specimen of scarification (Yao woman)

4. A Yao native

[End Plate 5]

142
291
531

1. A YAO GIRL

2. YAO GIRL WEARING HEAD APRON

[177]
[304]

3. TWO YAO GIRLS WEARING TRADE CLOTH

4. A YOUNG YAO WOMAN

[End Plate 6]

3: Stannus D-5 (ca. 1912) 1922 FT7 Yao FT7

142
291

1. YAO MAN WEARING HEADCLOTH
COAST FASHION

2. THE SAME IN PROFILE

142
291
302

3. AN OLD NATIVE WHO HAS ALLOWED
HIS HAIR TO GROW LONG

4. AN OLD WOMAN, SHOWING THE *mpiele*
WORN IN THE UPPER LIP

[End Plate 7]

3: Stannus D-5 (ca. 1912) 1922 FT7 Yao FT7

532

142
291

1. NATIVE PAINTING ON THE OUTSIDE OF A HUT WALL

2. A YAO NATIVE

142
302

3. MACHINGA YAO YOUTH

4. MASANINGA YAO YOUTH, SHOWING LOW GROWTH OF HAIR ON THE FOREHEAD

[End Plate 8]

3: Stannus D-5 (ca. 1912) 1922 FT7 Yao FT7

101
102
131

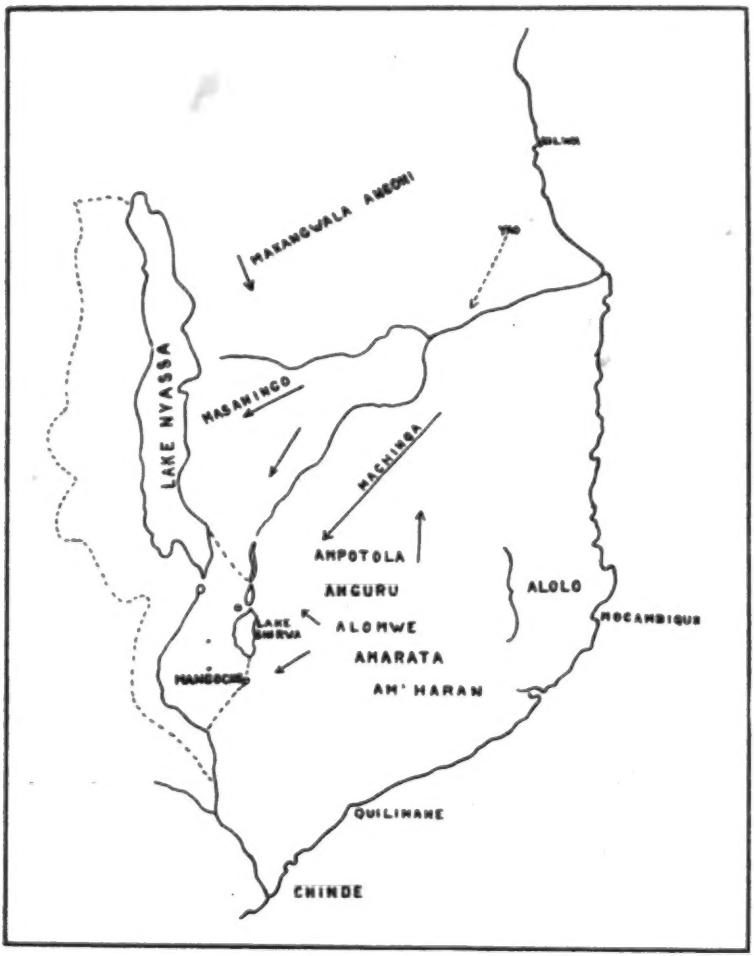

DISTRIBUTION OF THE YAO IN NYASALAND

[End Plate 9]

3: Stannus D-5 (ca. 1912) 1922 FT7 Yao FT7

778
825
532

[361]

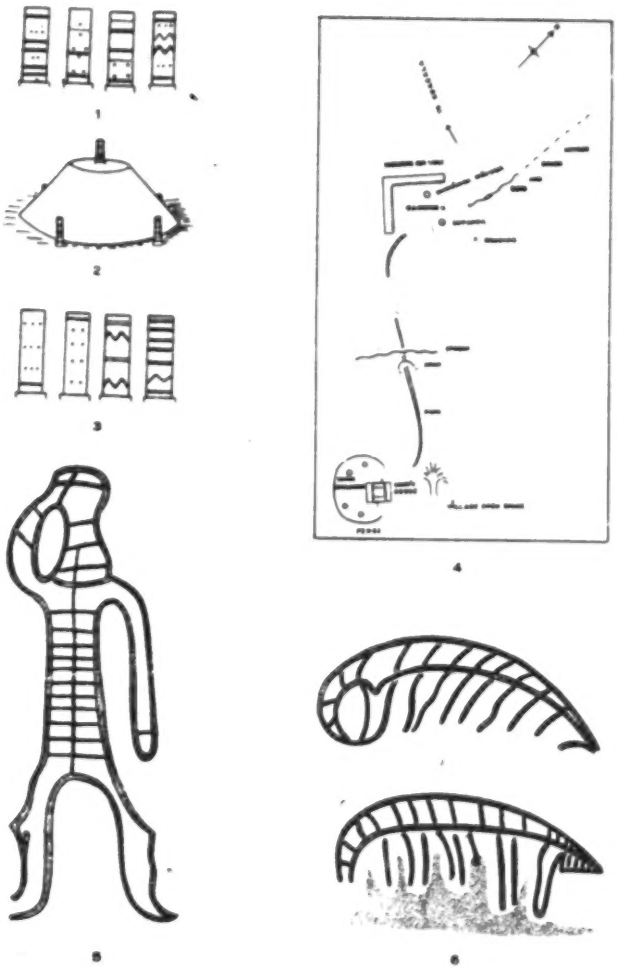

1-3. CHIPO UNDERPINNING; 3, LITAKNA POSTS; 4, SKETCH PLAN OF LITAKNA; 5-6, INTAMO FIGURES

[End Plate 10]

[Explanation of plates, cat. 116, p. 265]

778
532
825

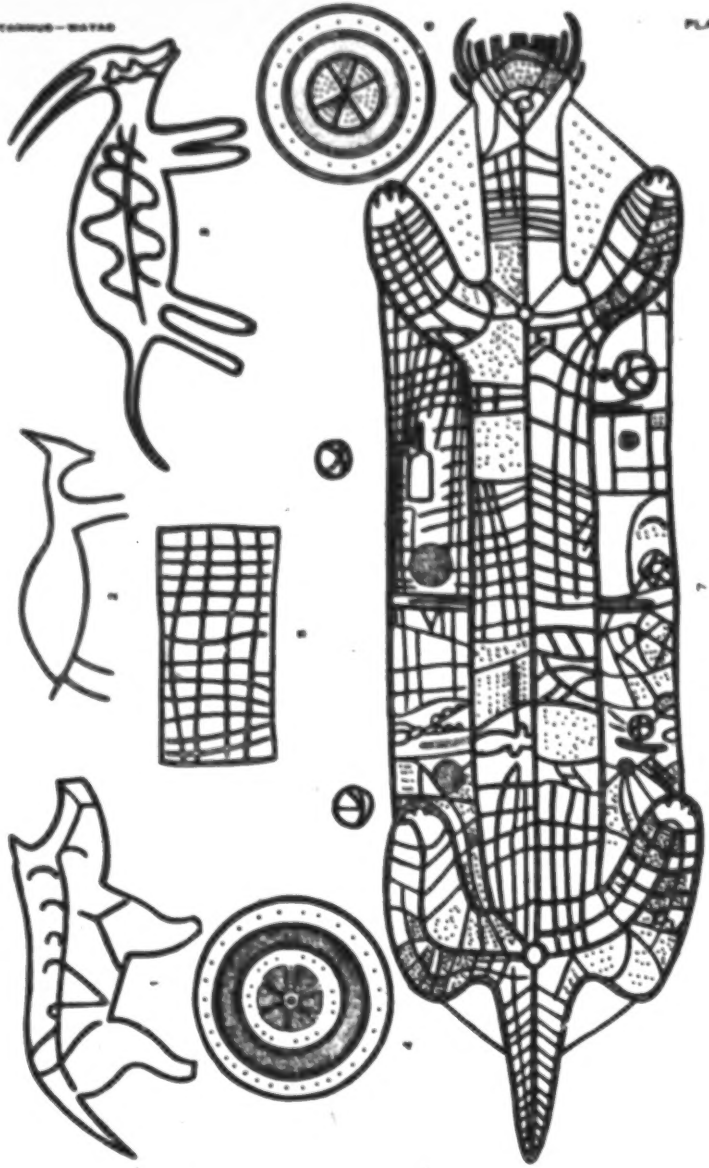

[End Plate 1L]

[For Plate Explanation, see cat. 116, p. 265]

778
825
532

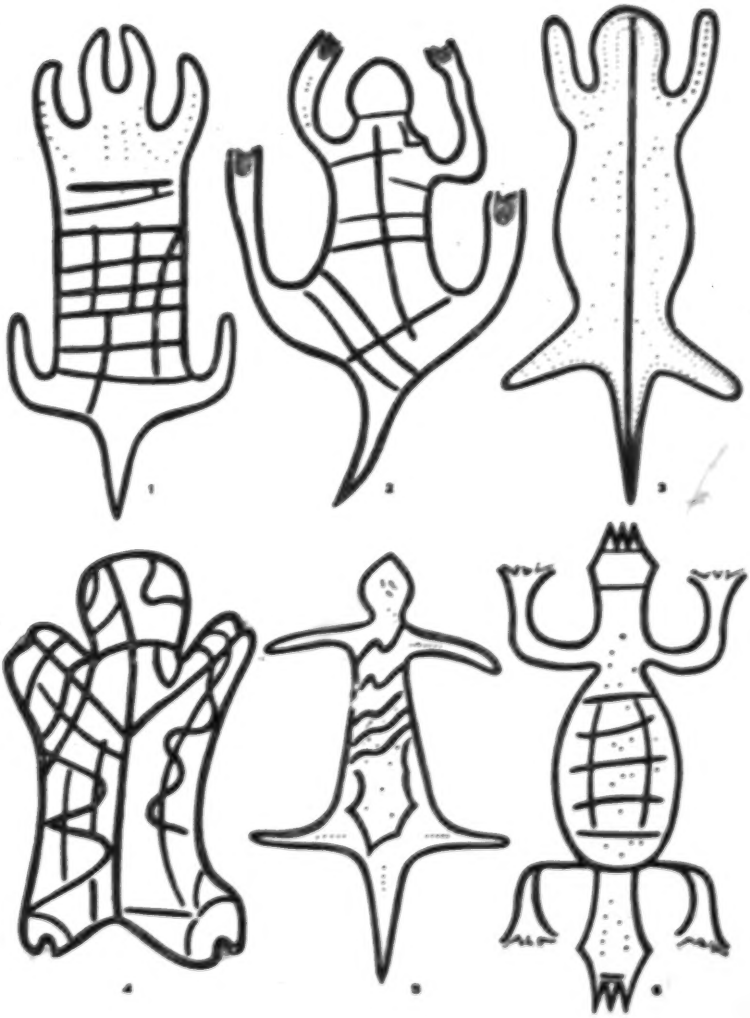

STONE FIGURES

[End Plate 12]

[For explanation, see cat. 116, p. 265]

778
825
532

[End Plate 13]

[For explanation, see cat. 116, p.265]

415

352
354

14. [illegible]; 15-16. [illegible]; 17. [illegible]; 18. [illegible]; 19. [illegible]

[End Plate 14]

415
531

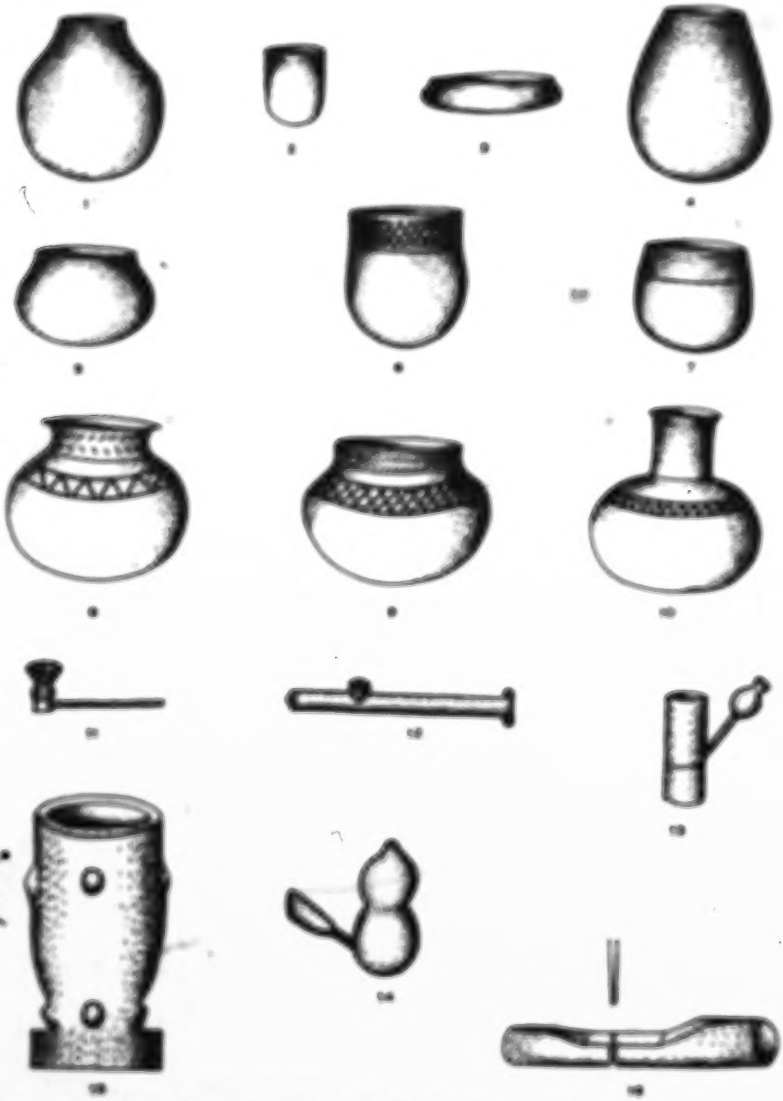

276

276
412
372

[End Plate 15]

1787

285

285
415

1-6, Dancer's kit; 8-10, Skin; 11-16, Sweats

[End Plate 16]

3: Stanmus D-5 (ca. 1912) 1922 FT7 Yao FT7

H. G. STONEMAN—SHAYAO

PLATE XVII

285
531

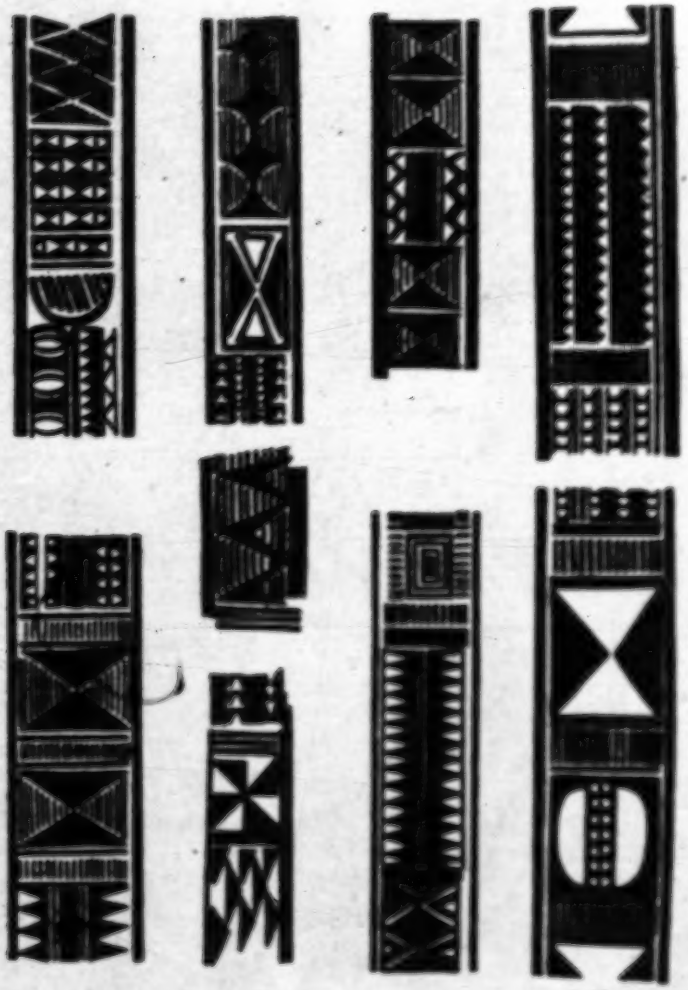

Designs from the doors of the midnight dancers

[End Plate 17]

302

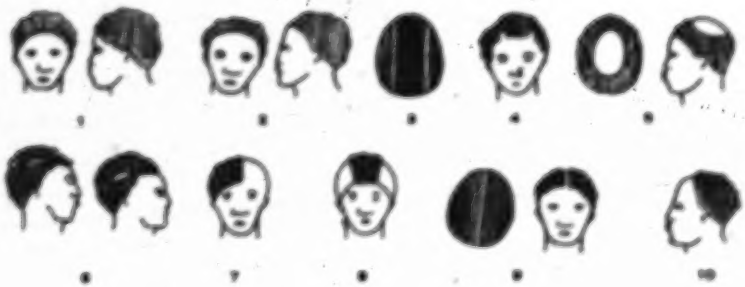

532

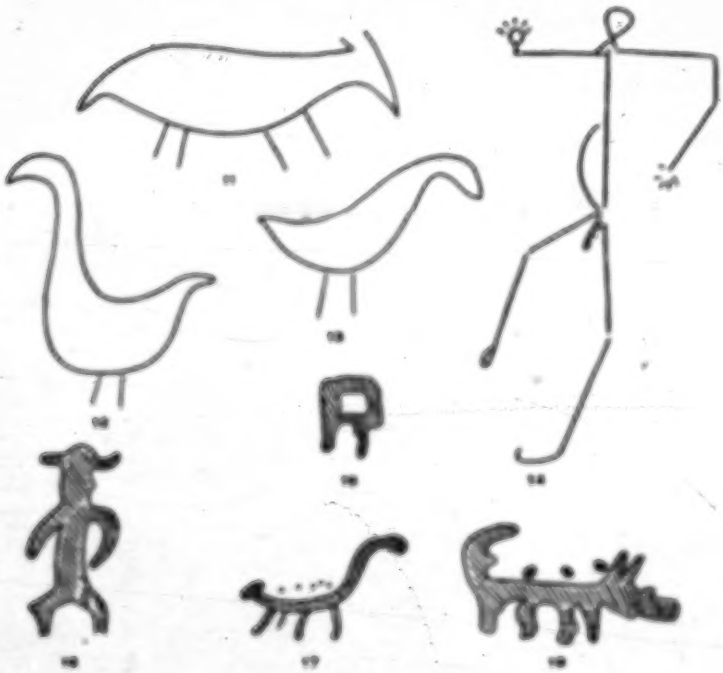

1-10, Kumbumerri; 11-18, Karuwa natives

[End Plate 18]

224

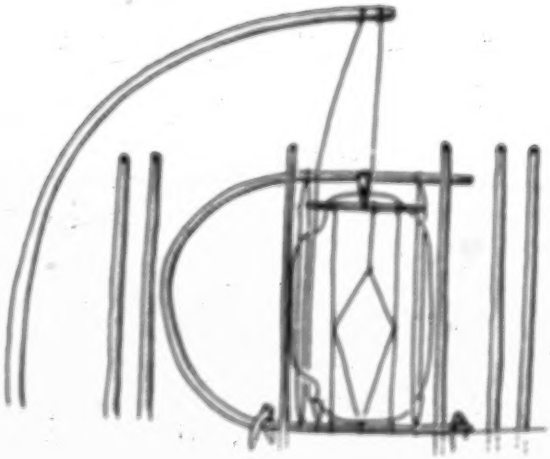

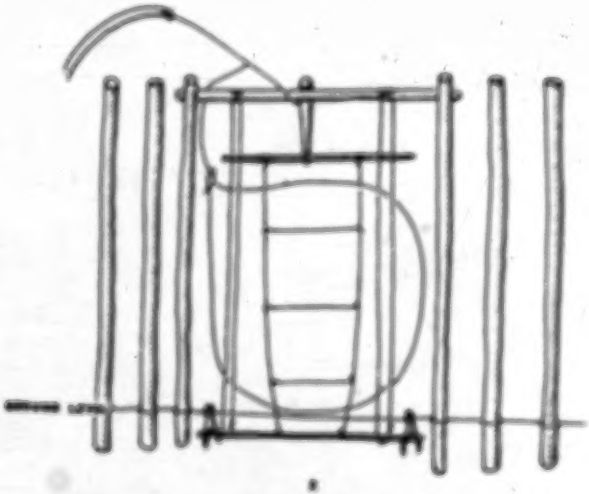

1. TRAP FOR THE CONCEALED; 2. TRAP FOR GRADUATED CATCHES

[End Plate 19]

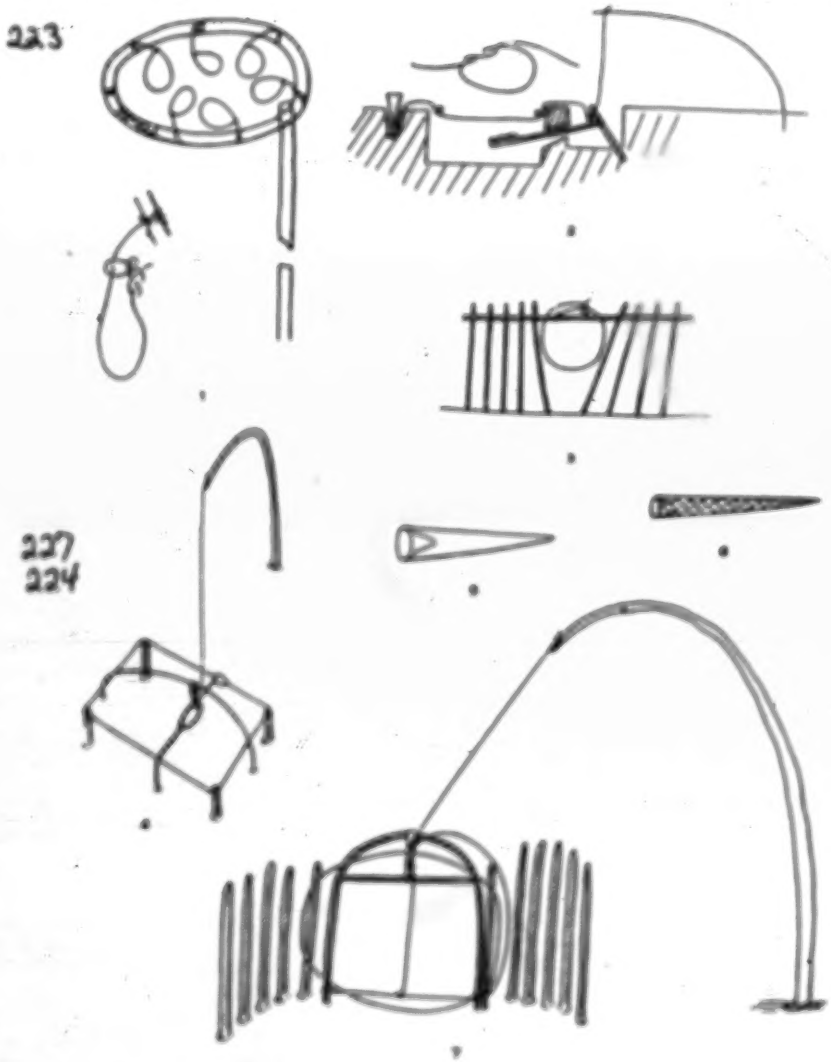

[End Plate 20]

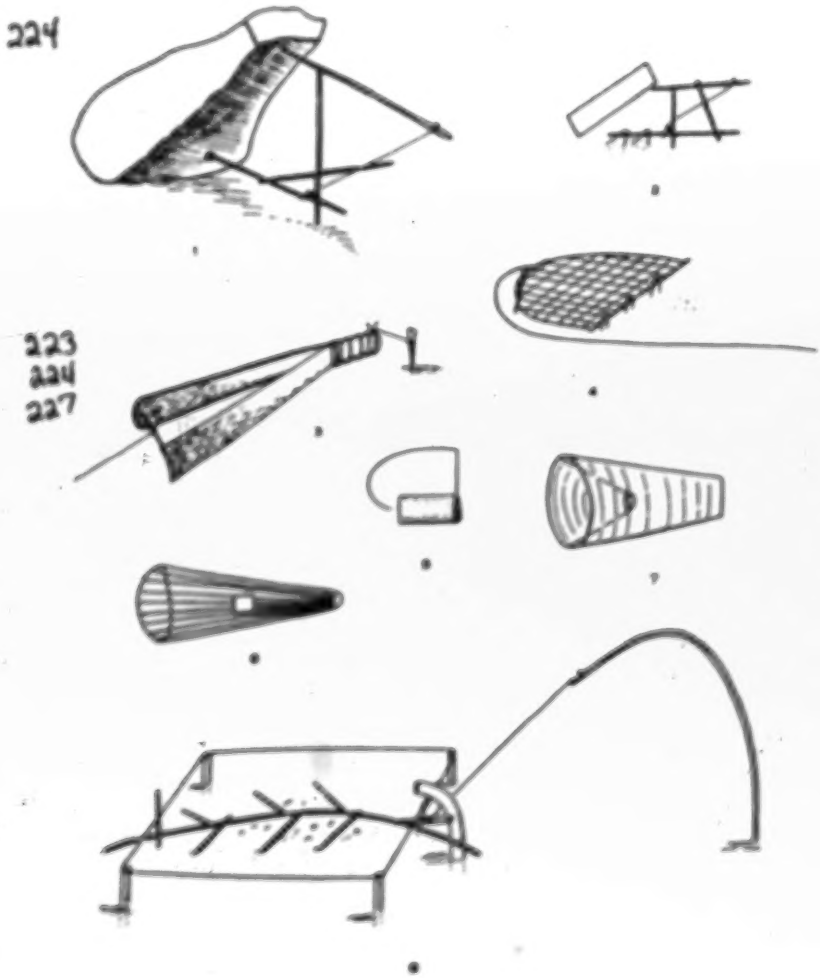

1, 2, 3, Trays for both and rear; 4, 5, Side trays; 6, 7, Fore trays; 8, Tray for middle rear.

[End Plate 21]

3: Stannus D-5 (ca. 1912) 1922 FT7 Yao FT7

752
757
413

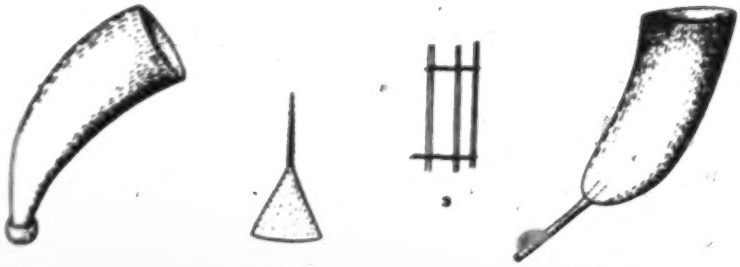

524

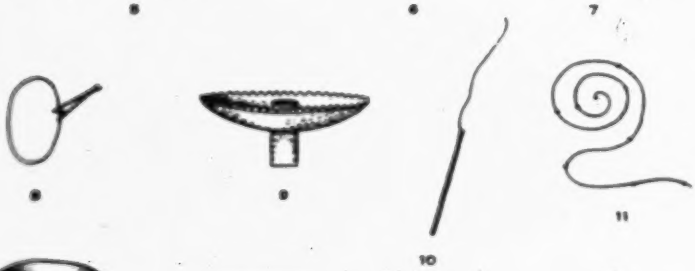

534

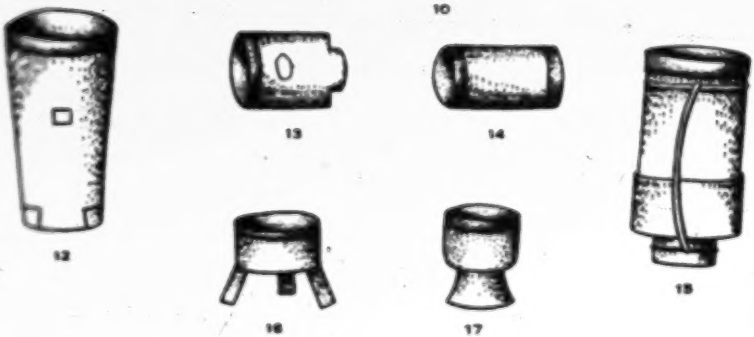

1, Cupping horn; 2, Surgical knife; 3, Splint; 4, Emesa pencil; 5-11, Children's toys; 12-17, Drums

[End Plate 22]

3: Stannus D-5 (ca. 1912) 1922 FT7 Yao FT7

524

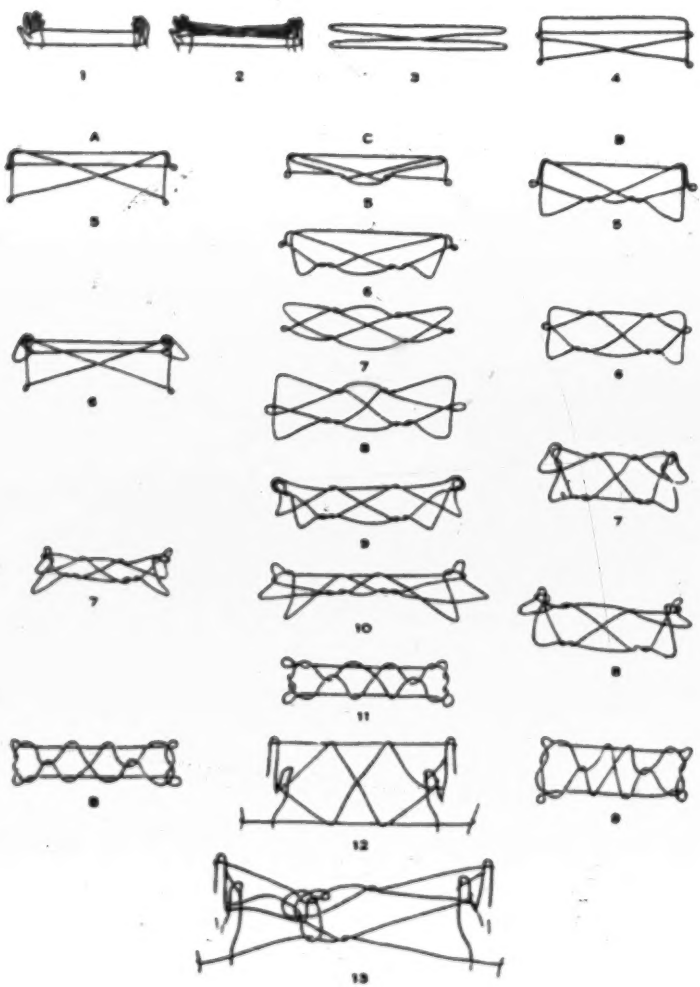

CAT'S CRADLE

[End Plate 23]

4: Stannus D-5 (ca. 1909) 1910 FT7 Yao FT7

THE JOURNAL

OF THE

ROYAL ANTHROPOLOGICAL INSTITUTE

OF

GREAT BRITAIN AND IRELAND.

VOL. XL.

[title page]

PUBLISHED BY THE
Royal Anthropological Institute of Great Britain and Ireland.
50, GREAT RUSSELL STREET, LONDON, W.C.

All Rights Reserved.

4: Stannus D-5 (ca. 1909) 1910 FT7 Yao FT7
Maravi FR4

NOTES ON SOME TRIBES OF BRITISH CENTRAL AFRICA.

By H. S. Stannus, M.B.

[With Plates XXVI, XXVII.]

With reference to what follows, I deal with the inhabitants at the southern end of Lake Nyasa, more especially those near Fort Johnston. M Y 131

This people is very mixed, the original inhabitants, "Anyanja," belonging to Nyanja stock, one of the many branches of the Bantu, were many times overrun by invading waves from the east, Amangoche, Ajawa (Yao), Machinga, Maraninga, and their territory at this point was also raided from the other side by the Angoni. Though the Machinga may be said to have settled here and be the ruling spirit, the people are more Anyanja than anything else, and their customs, etc., though suffering by being those of a conquered race, yet have survived in great part. Those people are often called the Nyasa, only meaning the dwellers near the Lake, but it is a good collective name now. M Y 563

As far as possible these notes refer to Anyanja and their customs, and added matter and Yao elements have been eliminated; for this reason they will be found to differ in some ways from accounts given by others. M Y 128

Of the average native one may say that his physique is very fair; given regular work and food, conditions such as exist on some of the boats, he develops into a very fine muscular man. A man will carry between fifty and sixty pounds 40 miles in one day, or a number of days in succession covering half that distance per diem. A man could cover 50 to 60 miles in twenty-four hours. He can travel the whole day without food, and would do three or four days' march unloaded without food provided he had water to drink. M 147 482 481

Sensibility to pain is undoubtedly less than in the European, *i.e.*, the native can stand pain well if he be not afraid (*e.g.*, removal of sebaceous cyst without anæsthetic, extraction of teeth, etc.), the pain seems sometimes to be deferred, *i.e.*, in cases of tooth extraction appears to be perceptible a minute after the actual operation. An inflammatory condition seems to cause them intense agony, so that I would say they do not feel pain so acutely, but they do not bear it as well as a European. M 147 151

I would make another contrast, in fighting against disease a native will often go under from sheer apathy, whereas the white man keeps going by his nervous energy. I have seen the reverse in the case of a carrier who went through an M 147 157

4: Stannus D-5 (ca. 1909)1910 FT7 Yao
Maravi FR 4

147 acute lobar pneumonia, doing 15 to 20 miles a day simply because he would not be
157 left behind among a strange tribe, though hospital accommodation could be provided for him.

They do not endure cold well. On visiting a hill station one's carriers will go
147 down to the plain to sleep, if possible; with cold they look miserable and pinched,
151 they behave foolishly and cannot work; with greater cold they lie down to die without much ado. This is due to the fact that the ordinary native has no subcutaneous adipose tissue and he is spare in every way. They can bear the direct rays of the sun in the ordinary way, but in their village life always seek
[293] shelter and remain at rest during the mid-day heat. Hats and umbrellas or the coast fashion turban is adopted and appreciated.

Natives notice that men have an odour; they distinguish between the odours of
147 white and black men, but not between tribes, except that a Yao will say that he
827 knows an Angoni, explaining that it is due to his washing less. A black man smells more when doing work and perspiring. A woman[1] smells more than a man, and a child not at all, as a rule. In these particulars I agree with the native's account, but would add that some natives, though of cleanly habits, certainly smell more than others, and to such a degree that one could not employ them in the house; a meat diet certainly causes an increase and a change in the odour of a native.

[824] *Mlikani*, a shrub, is used to rub over the hands to take away the smell of
(302) fish, and gives a scent like camphor.

The smell of human excrement and foul pus is very much disliked. A man on experiencing a disagreeable odour spits.

Fear is characterised by dropping of the jaw, eyes wide open, eyebrows partly
152 raised, and a peculiar ashy colour, no doubt due to the paling of the skin; the hand often covers the mouth, and trembling is common.

In expectant pleasure the mouth is open, the eyes wide open, with some
201 fulness of the lower lids. Inability to do anything asked is signified by shrugging forwards of the shoulders, the head being rotated by one of the sterno-mastoid muscles, that is, the occiput is rotated to one side and depressed, approximate to the shoulder; the mouth is open, the eyes transitorily closed. Affirmation is expressed by backward inclination or raising of the head and eyebrows, leaving the upper lids in position, causing the eyes thereby to close partly; the mouth is opened with a long expiratory "ecch!" To emphasise that a thing was witnessed by themselves they point to their eyes.

Unwillingness to comply with a demand is expressed by shrugging of one shoulder, usually the left; this is most commonly seen in the women. The head

[833] [1] They say of women that there are three classes: those that emit odour (*a*) before, (*b*) during, (*c*) after sexual intercourse, they possess greater sexual desire in the order *a*, *b*, *c*, the first two being more likely to become prostitutes. Those persons who perspire during coition are said to have no power.

4: Stannus D-5 (ca. 1909) 1910 FT7 Yao
Maravi FR4

may be sharply moved to one side and a short grunting sound through the nose 201
with closed mouth is made.

Exclamation of denial with indignation is made by raising the eyebrows, opening the mouth, and uttering a high pitched "eh!" Emphasis to a denial is made by a movement of the hand across the throat [you may cut my throat if I lie]. When laughing tears may come into their eyes. [147]

In dealing with expression of the emotions we find that their emotions are 152
not quite parallel with those of white races, their psychology being different; thus 201
astonishment is always associated either with pleasure or fear; open-mouthed pure surprise I have never seen—what might surprise a white man does not have the same effect on the native—it is something new to him and may be extraordinary, but it is caused by some particular "medicine" having been used—such a phenomenon might incite signs of pleasure or fear, or commonly a look of assumed indifference. I have never seen the mouth opened and the hands raised in astonishment.

Among the natives not in contact with Europeans, if not in all, shame, as we understand it, is not felt—remorse with perhaps a feeling of shame at having deceived so inefficiently may be expressed—giving rise to a sheepish expression. The eyes are cast down, the head bent, a blush may be seen; the mouth is often moved from side to side, the weight of the body is shifted from one foot to the other, and sometimes they paw the ground with their feet.

Disgust and contempt are well expressed, the upper lip slightly turned up, the head thrown back, the corners of the mouth depressed, the eyes partly closed. A disgusting smell excites expiration and spitting. Doggedness is recognised by a fixed expression, mouth tightly closed and upper eye-lids lowered.

With regard to attitudes, movements, etc., one may say of the native that he 481
presents no awkwardness. The gait is neither energetic nor, on the other hand, slouching, but as a rule slow, head erect, body upright, knee slightly bent, the arms swinging by the sides when free, though it is seldom that one sees a native who is not carrying something with one hand or holding his cloth. The palm of the hand is usually directed inwards or backwards, the foot is planted on the ground firmly, the heel but slightly in advance of the rest of the sole of the foot.

The toes are commonly turned in, though usually the axis of the foot is directly antero-posterior; outward turning of the foot is rarely seen; on rough ground they retract or extend the toes to some degree to preserve them from injury.

In position of rest they sit with the knees partly drawn up towards the chin 516
or squat sitting on their heels, the feet flat upon the ground; women commonly kneel or, with anything to lean against, sit with limbs extended.

In sleep they lie on one or other side, affirming that lying on the back gives 513
rise to dreams. The wife lies facing the back of her husband, a baby lies at the mother's breast.

4: Stannus D-5 (ca. 1909)1910 FT7 Yao Maravi FR4

513 They seem to prefer the head slightly elevated, or rest the head on a wooden head-rest, or on the arms, or they affect a semi-prone position, the forehead resting on the forearm, knees bent. The head is always completely covered with the blanket or cloth.

514 833 In micturition the man usually squats, the woman kneels. In coitus the man is usually above the woman, though sometimes they lie on their sides facing each other.

482 [854] The child is carried astride the back of its mother, held in position by a cloth or skin tied round them both; if carried free the child is usually astride the mother's hip, supported by her arm. A man carries a child sitting on his shoulders. Burdens are carried on the head, supported on a grass pad, sometimes on the shoulder, or in the case of a two-man burden, suspended from a pole carried on the shoulders or, occasionally, on the heads.

They are masters of the art of making up loads, and in the case of a number of articles tie them securely on to a pole to balance over the shoulder. To a single load is usually attached on each side a split bamboo, projecting several feet at one end: this affords a means of holding the load, and also when getting it into place on the head the load may be stood up on the projecting ends, a great convenience. Fowls are carried in an improvised basket made of bark.

147 [516] They have very little direct control over facial muscles, and it is with very great difficulty that they can be made to move the mouth to one side—when opening the mouth wide they generally shut the eyes. I was never able to find a man who could move his ears or scalp voluntarily, nor a man who could close one eye independently of the other. The joints as a rule are supple, and extension of the fingers on the metacarpus is easy—they are able to extend the fingers without opening the hand. The first finger is used in pointing, sometimes the foot or head. The toes are used to pick up objects, but the great toe is not opposable.

579 *Fighting.*—Men fighting between themselves usually wrestle, the man down then receiving a blow on the head with a convenient stick. Two women fighting wrestle and sometimes use their fists. They bite and sometimes scratch, biting arms, face, and breasts. Fighting with a man a woman attempts to seize the penis and testicles, which she will jerk downwards with considerable effect.

ASTRONOMY.

805 Years are counted by "rains" up to three or four years; beyond that it is "some time ago" (= *kale*).

Lunar months are recognised "three moons ago . . ." A man will give the day of the month by pointing to the heavens and indicating the position of the moon at dawn. Pieces of wood threaded on a string are used to indicate the number of days of the month that have passed. The day is reckoned from sunset [211] to sunset. The position of the sun in the heavens is used to give the time of day, and the latter is also reckoned by the length of shadow cast by a stick (= *Nthawe*).

4: Stannus D-5 (ca. 1909) 1910 FT7 Yao
Maravi FR4

Sunrise and sunset are known to vary in position north and south of the mean position, which is occupied twice a year. The sun and moon are supposed to make their return journeys through the sky hidden by it and clouds. 821 [805]

The morning star is observed. The Pleiades are recognised and called *Nsangwi*; when seen to rise early in the evening the season for hoeing has come. The Milky Way is known as *Koba usiku* (=midnight); it becomes visible about midnight

Shooting stars are supposed to be pieces broken off on collision between two stars. Thunderbolt=stone=*Mwala*. Eclipses of sun and moon have been seen and the sun and moon are then said to have been caught by a snake (=*Njoka*). Clouds are supposed to be smoke. Rain is not explained. All things are said to have been made by the unknown Power, *Chinta*, not a man. North and south are named *mpoto*, *mwera* respectively, the names of the two tribes bounding the Anyanja people on the north and south. A short distance is expressed by *ankula kasiri*="You will not smoke twice"; a longer by "You will not sleep twice," etc. Hot springs=*madziwila*. There is a story that Magomero once erupted, but they have no name for a volcano. [776] 823

ENUMERATION.

The native counts on his fingers, ticking off the fingers of the left hand, first beginning at the little finger. 5 is the closed fist, thumb inside; 10, hands together. After 10 the toes are used, starting with the little toe of the right foot. To express 15, 10 is shown and then the right foot grasped with right hand. To reckon numbers above 20, stones, knots in string, notches in wood are used; 2 tens, 3 tens, and so on. The words for higher numbers are borrowed from other languages. 802 [211] [177]

To add, the native counts on his fingers. 5 and 4=5, 6, 7, 8, 9=9. Subtraction is difficult. Multiplication and division not known.

Before calico was introduced into the country, skins, ivory, and bark for cloth, were used as barter materials. 435 437

A man slave was worth			50 yards calico.
A woman	"	"	40 " "
A cow	"	"	15 goats=15–20 yards calico.
1 spear	"	"	1 fowl.
1 hoe	"	"	1 basket of maize.

Measurements corresponded to the length of nail, hand, foot, arm, from finger-tips to finger-tips (fathom), as in speaking of trees "so many double-arm lengths high." Cloth was measured from tip of middle finger to point of elbow, called a hand's length (=*dzanja*). Area is measured so many hands' lengths each way. Land is never measured; capacity is expressed in basketfuls, various known baskets being used. Beer is measured as "so many pots." 804

In expressing the height of a man, saying "he is so high," the hand is held upright, the tip of the fingers indicating height. Speaking of an animal the arm is

4: Stannus D-5 (ca. 1909)1910 FT7 Yao Marovi FR4

804 held horizontally, thumb up. Of inanimate objects, arm and hand parallel to ground, hand prone.

CRIMES, ETC.

Homicide is a criminal offence, whether there was good excuse or not, *i.e.*,
682 whether murder or in self-defence. In the case of a man who has killed another, the uncle is called by the chief and told what payment he will have to make; that paid to the chief is known as "blood-money" (=*chenzeuzi*)) a cow and a slave are first sent to the chief, then five or eight cows, then a piece of calico, then two yards of calico; these are passed on to the relations and a cow is returned to the chief.

Should the man possess no property he himself, his sister and mother might
[567] go as slaves to the deceased's uncle or brother. After compensation is paid, beer is made by the receiver of the "blood-money"; the man who has killed the other and his people are called to drink, and they then agree that the affair is closed and that they will be friends and not bear enmity.

Suicide is an offence. Several chiefs, however, have committed suicide rather
[762] than suffer at the hands of white men in the old days. A man maiming another
683 has to pay blood-money to the chief and a cow to the injured man.

684 Rape was punished by drowning by the Lake people; the offender was bound, stones attached to him, and he was thrown into the lake.

A man inducing a woman to run away with him would go with her to another village, and if afraid of being taken back, they would go and break a pot over a
[567] grave and by that token become the slaves of the headman's brother.

A man seducing a virgin would have to pay the equivalent of £2, unless he marry her immediately.

[683] Assault is compensated on a sliding scale, so long as blood is not shed the chief does not receive "blood-money."

Adultery was punished by drowning and shooting; if the wife of a chief was the culprit, the guilty pair were tied together *in coitu* and then thrown into the river, or a piece of bamboo might be put up urethra and vagina of man and woman respectively, the two bound together and left in the village open space to die. In other cases ears were cut off, testicles excised. Unnatural offences are unknown.

685 For arson the damages vary according to the damage; for theft cutting off of hands or ears was practised.

All cases were heard by chiefs and headmen. The headman sit in a circle in
695 the open space (*bwalo*) of the village, usually under the shelter of a big tree. In some cases the chief hears the case, if it be one involving a headman. Ordinarily he remains in his house and the evidence is repeated to him and settlement made. The man bringing a charge salutes by clapping his hands, and sitting down makes his case; the accused then speaks, and witnesses on either side are then called. The accused is nearly always present. There is hardly any torture applied. In cases where they wanted a man to own to being *mphiti* two sticks were applied to the sides of the head and two strings uniting them tightened. In such a

4: Stanmus D-5 (ca. 1909) 1910 FT7 Yao FT7 Mseve FR4

case *mseve* might be administered; if adjudged guilty the accused would be burned on a pile of wood. M 695

Evidence is given without taking any oath; a false witness is not punished. M 696

Justice is occasionally summary. At Mponda's, after conviction of adultery with one of the chief's wives, a man's throat was cut on the spot. Drowning was the usual punishment with Mponda.

Punishments for all offences practically meant payment.

CUSTOMS, SALUTATIONS, ETC.

The correct salutation among Machinga Yao and Matanja on meeting is clapping the hands, the hands in front of and at right angles to the body parallel to each other, thumbs against the fingers. The clapping should be continued for ten minutes after having passed; after passing a chief it should be continued for half-an-hour. M Y 576

Another form consists in slowly beating the breast with the right hand, the head slightly inclined forward. The lower in station makes salutation first to the higher, a man to a chief, a woman to a man; exception is made in the case of an old woman, who is saluted by the man. Scattered all over the country a raising of one or both arms is a common form of salutation, but is probably only a corruption of the military salute. M Y [554] [888]

Slapping of the nates or thigh with the right hand is also seen, among old men usually. In imploring mercy from, or on the first occasion of meeting, the chief, a man lies prone on the ground and catching the foot of the chief, puts it on his neck—a sign of abject submission. Women kneel at the approach of a man. Words and expressions of salutation are few—*Mapo* (=heart) being the only old expression used. Now commonly one hears a word (sounding like *mŏni*) probably a corruption of good morning, and the Swahili greeting *Salukri* with the double hand-shake of Mohammedans. M Y [201] [562] [177]

A man returned to his village after an absence rests awhile, then his wife comes to him and kneeling greets him, *mapo*, her husband returning *mapo*.

Years ago, a man of any importance was received with firing of guns and shouting. A headman is received now with *Mwapulule*, the women wobbling their tongues in their mouths. Ashes are put on the head as a sign of joy. M Y [152]

In the morning the husband and wife do not greet each other, but in the village friends "give each other good morning" (=*Mapo*). On waking in the morning, a woman cracks all her joints (=*Kulisa chala*). She then massages her husband and cracks the joints of his fingers. M Y [571] [576]

One man wishing to see another goes to his house, and squatting outside the door cries "*Iko!*" three times (=there), at the same time slapping his hands. If no answer is given he goes away, even though he knows the man is within, no answer meaning that the inmate does not wish to be seen. If invited to enter he does so, the man of the house rises and gives him salutation. He makes small M 574 576

4: Stannus D-5 (ca. 1909)1910 FT7 Yao
Maravi FR4

574 talk for a little, and then sitting asks his visitor to be seated. *Natenle* (=remain
576 seated, I must go) he says when rising to go; the man of the house rises and says *Napite!* (=you may go). If a man wishes to speak to a woman, the woman comes outside her hut.

Men and women never take their food together, a husband never sits and
264 talks with his wife, the sexes congregate separately. A man taking his food in his hut is looked upon as greedy. Outside he invites anyone near to share with him.

Husband and wife sleep on the same bed, the former retiring first and lying on
513 his left side, the woman lying on same side faces her husband's back. Old people sleep on separate mats, not together.

The wife or daughter looks after the old man past work, an old woman is
888 cared for by her daughters and sons. Old people used to be put in small grass
737 huts on the outskirts of the village, and allowed to starve. Old men are more or less respected and consulted by the younger.

A man about to take food invites anyone with him, relations or friends, to
264 partake of it. In old days a friend visiting would be given the host's own house
574 and the wife instructed to cook for him and look after his wants, no fear of any
178 advantage being taken of the woman was entertained; now a separate cubicle in the same house is assigned to the visitor.

It is customary to remain one or two days on a visit. A stranger of the same
574 tribe on arriving in a village goes to the headman and tells him his errand. He is then given over to a *mpilde*, who finds him a house and food.

In going to defecate old people go half-a-mile away from the village. A man
514 catching sight of a chief at stool will run away lest any harm come to himself. A man must not defecate or micturate near any woman, such would be very bad manners. In front of men it does not matter. Two women may do so in each other's presence.

515 Husband and wife never bathe together—in the house the wife may wash the husband, but if she would wash herself her husband leaves the house.

578 Coarse language in front of women and children is disapproved, but is more
831 common now than formerly. In the same way there is greater license between the sexes. Drunkenness was always allowable among men, but now women and
[273] even children are permitted to indulge in excess. Certain words as they get
195 vulgarised are considered bad form and others substituted, thus:—*Ku-pangu Chipdale* (=adultery), is replaced by *Ku-fudza*; *Ku-Kodza* (=to make water) by *Ku-isitlwa*; and *ku-tira masuwa Ku-wa* (=to defecate) by *Kupatuka* or *Kupolaka* (of a child); *machendi* (*pudenda*) by *masa*.

DISEASE, ETC.

753 As regards disease there is of course a very great difference in the point of view taken by a native and that taken by a European medical man. The native recognises a number of objective illnesses and has names for them—for a number

4:Stanma D-5 (ca. 1909) 1910 FT7 Tao
Marav: FR4

of subjective illnesses he has names, generally taken from the most prominent [753]
symptom. Thus in many cases he gives the same name to illnesses resulting from different causes in which some prominent symptom is common to both. In many cases, and in all which are fatal (excepting death from actual visible injury), the illness is ascribed to the workings of some person—he having compassed the death [759]
of his victim either by making medicine against him or actual administration of some noxious drug with the idea of eating the dead body, the evildoer being possessed or *ngáli* (q.v.)

Some special illnesses call for comment :—

Mwale (Scott's *Dictionary*)=rash breaking out in children. If a child [755]
sickens an old medicine woman is consulted. She asks to examine [756]
the mother—the vulva is examined and *Cerasocale superiforus* sought (=mwale); these are said to be the cause of the illness in the child, and are therefore removed by the medicine woman with a sharp [752]
knife. If the child does not recover, the father goes to the medicine woman, who directs him to be examined by some man, who reports to the old woman whether mwale are present or not [they are found round the base of *cerasocale* under prepuce]; these if present (*papillomata*) are removed by the man appointed—if none be present the medicine woman examines the man's mouth and the two papillæ under the [752]
tongue are accused of the trouble, and therefore removed by the old woman. These proceedings are called "going to mwale." One of the essential symptoms of mwale disease, I was told, is that the child becomes very pale.

Tsempe.—The disease from which a husband will die who eats food which his wife has seasoned and cooked if she has committed adultery before the making of medicine after the death of their child. This resembles *Ndeke*. The father and grandfathers, after the death of a child, may not sleep with their respective wives until after medicine [759]
has been made and administered to them and all the other [759]
children.

Kuba mwendwe.—Characterised by hæmaturia, with pain in back and over bladder, immediately after coitus with a woman who is menstruating. [761]
Men are said to have died from the affection—medicine usually produces a tardy cure.

Ndeke.—Suppose a man without a wife go to any house and take food (porridge) in which salt has been put by the woman preparing it; he may fall sick with *Ndeke*, symptoms being swelling of legs and sometimes of face. This is often fatal unless treated by the medicine man. Should a man pass close to a refuse-heap in which a fœtus (miscarriage or still-born child) has been buried, he may contract the same illness.

4: Stanner D-5 (ca. 1909)1910 F77 Yao
Marawi FR4

753 *Inje.*—Name given to a disease for which there is no medicine. Such diseases may get better, but should the person have sexual intercourse they will reappear; the case is said to drop off.

Probably includes tertiary syphilitic lesions, tuberculous and malignant affections.

Ziwipe.—Ulcers on arms. A man whom I saw said to be suffering from *Inaipe* had syphilis, his wife a little later had ulceration of leucoma, and was said to be sickening for *Inaipe* caught from her husband.

Chipindo.—Disease of external sexual organs.

- *cha mzuzi*=chancroid=disease due to coitus with a menstruating woman.
- *cha mafuqo*=chindolo=gonorrhœa.
- *tenje*=in micturition a man is said to pass a lot of fine threads before the water appears, afterwards they go in again.
- *cha chimo*=(white ant).
- *cha chapulo*
- *cha kuchelo*=includes the last three above.

A man going away for some time and leaving his wife may put medicine at the door of the hut; the wife walking over it is said to have it rise up into her, so that should anyone commit adultery with her he will get *chipindo*.

[727] *Chidiana.*—Blindness. Result of not washing the face in the blood of a man slain in warfare after cutting out his heart.

It is said in Central Angoniland that if the wind blow from the west for seven days then smallpox will come. There seems to be something in this, for such a wind would come over Portuguese territory, where variola is endemic.

[734] [821] *Hydrocele*, said to be caused by having connection with a woman two or three days after menstruation. *Mzoro* (=south) was the name given on account of the belief that men so affected were made worse by going out in a south wind. The ear is said to contain frogs. If a boy makes a noise by knocking two crossed sticks together a man with hydrocele will tell him to stop as the noise resembles a frog's croaking and causes the frogs in the ear to move about.

[825]

Treatment of Disease.—Many illnesses among children are treated as follows:—

757 A decoction is made by boiling the leaves of five or six trees in a pot of water, the child is held over this, and the child and pot covered with a cloth; it is in fact a form of medicated vapour bath. This is not repeated, but if the child has not recovered by the following day it is washed in a mild decoction made from leaves and roots; this may be continued for several days. These medicines are all prepared by the medicine women, and if they are returned to her another woman is consulted. On the first day of treatment remuneration is at the rate of two

4:Stanner D-5 (ca. 1909) 1910 F27 Tao
Marsi FR4

strings of beads; when the medicine woman is consulted and asked for medicine she demands beads that she may see clearly where the medicines grow—should no beads be forthcoming the woman may make pretence of finding herbs, but say that they hide themselves; the applicant will then come back with beads, when she will immediately see medicines plainly; no further payment is made till the child is well, when the old woman casts medicine at some roads, the child's head is shaved and half a small basket of medicine is given as payment. 757

Methods of treatment may be divided into three groups:—

1. By administration of drugs internally.
2. By local application of drugs, mechanical means.
3. Medicine charms.

The giving of drugs by the mouth is but slightly used, certainly a number of astringent barks, etc., are given in diarrhœal diseases, but how far with good effect I am unable to say. Emetics are known, but not commonly used. Purges apparently are not known, as they are drugs much appreciated by the native.

Aphrodisiacs are always in great request, to rejuvenate the flagging energies of the twelve-wived husbands of adult age. These are three commonly used: (*a*) *whose* bark, (*b*) *Mbutumudu* root, (*c*) *Mudu* root; one tablespoonful of the powdered bark of the first named taken in beer produces its effect in half an hour, producing an erection at the sight of the first woman seen, the number of coitus possible in a night is increased from 1-3 to 3-7. If taken by a woman she becomes sterile. Coitus by use of drugs is reduced from 1-30 minutes to 2 minutes. Some taken by a friend of my own (a European) caused only increased vigour and capability of heart action. Medicine to bring on overdue menstruation is used, and an abortifacient is said to be known and of sure action. 278 [332] [591] [597]

Medicines.—*Ufundabwe* made of red earth and castor oil, and applied to an infant's fontanelle is a protection against the evil. Also used by a widowed husband before he may marry again. 278

Bleeding is stopped by sprinkling the strongly astringent powdered bark of the *ntumbo* tree or leaves of the *chitinde* tree; the bark of the *nyimpiti* tree is used on wounds. 278 [752]

A ligature is applied above the bite of a small snake, *nyikiri*; the limb is said to drop off below the ligature. Sucking of wounds is adopted. Lime is sometimes put on fresh wounds. Burns are treated with ground-nut oil. The smoke of burning horns is employed to relieve a cough. Dry cupping by means of small gourds, horns, etc., is practised. [757]

A certain degree of precocity is apparent at least in young boys, and is noticeably lost when they arrive at the age of puberty, when sexual excess seems to reduce them to a state of, in many cases, semi-imbecility. From this they may recover, or on the other hand they may remain certainly not so bright as when they were boys. 145 [856]

4: Stannus D-5 (ca. 1909)1910 FRY Yao FRY Maravi FR4

Circumcision and Initiation Ceremonies.

Y 304 M [304]

Circumcision was not practised among *Anyanja*. Among *Amangoche*, *Mankinga* and *Yao*, the practice was known as *Jopage* or *Japunde*.

Ki-cambale Japunde:—the prepuce was drawn forward and a slit made on the right side of the median line near the foreskin. An application mixed with oil was applied. At the present time the *Mohammedan* practice is common *Ki-cambale Jamde*:—the prepuce is drawn forward through a split piece of bamboo and cut off with a sharp knife.

Circumcision is performed on boys usually at the age of nine to twelve years by a medicine man called *Mpalile*, an honourable calling, in a hut at the *Isyage* camp. Both patient and operator stand, unless the former is young, when he sits. The ceremony is witnessed only by the boy's friend. Among Mohammedans circumcision used to be performed by a woman operator (*nakwape*), but, it is said, was discontinued, on account of the heavy mortality, about seven years ago. At the time of the operation a woman was given medicine to make her vomit all unlawful things she might have eaten.

Y 304 M [304]

Initiation ceremonies (including circumcision) take place at irregular intervals. The chief or headman settles the date at which the *Isyage* shall be held, generally some a year in July, when there is no work and little else to do. Boys who are considered ready will then take part. The elder brother or a friend of a boy settles whether he is ready for circumcision. The mother then takes a present to the chief. The boys, their friends and the medicine men then depart for the bush, sometimes a couple of miles away from the village. The number may vary from three or four to as many as thirty or forty. In the bush grass huts (*ve nanet*) are erected for their shelter. Food is brought by the mothers and deposited a little way from the camp, and the friends who have accompanied the boys fetch and carry and act as sentinels to prevent approach of any "outsiders." Six months used to be spent in the bush, now four to eight weeks only, and all the circumcision wounds must be healed by the time of the candidates' return. If a boy die, the mother is not informed, she is allowed to bring food each day; at the end when the return is made enquiring she is told by one of the men.

The exit from the village is accompanied by the friends dancing *Tawgi* or *Mawem*, the boys in old calico (formerly always in bark cloth) walk and sit down on arrival at the place appointed. The circumcision is performed the following day; during the time which follows instruction is given them on their duties in after life as men, in good behaviour in their married life, as calico, eating of food, superstitious regarding salt, etc. When this is all over a message is sent to the village, and the youths, walking quietly dressed in new cloths, are met half-way by the women and girls, who dance and sing; after the return to the village there is drinking and dancing, the newly initiated refraining for one day. At the present time the youth probably has some "friend" of the opposite sex with whom he sleeps; until he has had calico he may not eat food into which salt has been put. His

Y [347]

Y 55 M [336]

4: Stannus D-5 (ca. 1909) 1910 FT7 Yao FT7
Bemba FQ5

mother is very careful about this in preparing his food lest he die in consequence. He henceforth bears his mat's name, and it is an insult to use his child's name again.

Initiation of girls takes place in much the same way, instruction being given by the old women. After initiation most girls wear a string of big blue beads round the neck. In some cases, where it is not convenient to go far into the bush, a patch of bush near the village may be selected, the approaches are carefully guarded, and pieces of calico on bamboos are used as flags to mark the place.

Nawuli ceremony witnessed at Kasanka's village (Awisa tribe) August 30th, 1907:—A girl about fourteen years of age, well developed. Among the Awisa the initiation ceremony takes place when the girl has reached puberty and is ready to be married. Four days are spent by the candidate in a small grass hut built in the middle of the *bwalo* (= village open space), when instruction is given her in all her future duties by a woman who is her "friend," in this case a woman of about twenty-six years of age.

About mid-day of the fourth day she was brought into the *bwalo* wearing old calico round the waist, and with two friends, one on either side, danced a kind of shuffling step backwards and forwards to the time of four drums; it was witnessed by the women of the village, who occasionally joined in the dance. After this she retired, and later in the afternoon reappeared with blue calico from waist as far as knees, white calico tied round waist as a sash, a rope of blue beads round neck and under arms. On the head she wore an erection made of flour and water with a

FIG. 1.

central crest into which were stuck little pieces of reed, lines of red were painted on the white ground as shown in sketch. Always supported by her "friend" or "sponsor," she again danced for a few minutes and then departed.

This night about twelve midnight *Ziwpwa* was to be danced; all the evening and up till midnight a boy went round and round the village calling in a shrill voice warning none to approach. It was a very dark moonless night, and to the beating of seven drums (four small, two medium sized, one big) the *Ziwpwa* came into the *bwalo*. One was an elephant 8 feet high with a man in each pair of legs—made of grass, trunk and tusks complete; the other, called an *Nawale* (a small antelope) resembled a dwarf jack-in-the-green more than anything else. The elephant pranced, the *Nawale* spun round and round; each was attended by a man with a

4: Dances D-5 (ca. 1909)1910 F27 Tao Series VQ5

[531] outside who was in front of it, and by whom the *Shapes* made appearance of being baffled. The performance was witnessed by a circle of women and a few men. When the moon gave evidence of rising the figures disappeared.

The following morning the girl was again brought to the beads about 11 a.m. [532] and seated on a mat between her "friend" and her mother, while the women [531] danced to the time of seven drums. Her head was anointed with water and shaved, the process was started by a woman and then finished by a man, apparently the village barber; the left side of the head was shaved first. The mother was shaved by a woman at the same time.

While this was going on, presents were being made—maize, beads, a chicken, [533] tobacco, bracelets, etc. When the shaving was finished several women came and spoke to the girl, after which she was taken away for the bathing in the lake close at hand, returning about 1 p.m. In new blue calico from waist to knees with white sash, the body well oiled all over, to the time of one small drum played by an old man; then, supported on either side by two "friends," she waited a few moments [531] while several women did a few shuffling steps, she then advanced alone and did a [535] few steps. She then made a present of a chicken and tobacco to the drummer, and then to her father, kneeling to each. Again she danced alone, running to and fro

[532]

FIG. 6.

and spinning round quickly. During this time two masks, the *Sandanse* and *Ifukule* (Fig. 7), appeared and mixed with crowd, danced about and made funny gesticles; they went up to the girl and performed a kind of *dance-de-ventre*.

After then dancing in the village she goes round to the houses of all her relatives, beginning at her father's house, and repeats the dance together with addition of a little *dance-de-ventre*, the masks (*Sandanse* and *Ifukule*) go round with her, her immediate attendant being always her "friend." This night and the next day she spends in the house with her friend, the evening of the next day she goes to a [536] separate house arranged for, and has to have coitus with a man who is asked to oblige; on coitus taking place he has to withdraw in time, and the semen is collected on a cloth which has to be seen by the women. The following night she [534] goes to the house of her betrothed to live with him; she has probably been betrothed since she was an infant.

About the *Sandanse* and *Ifukule* I could learn nothing. These men were [532] masks with cotton covering the back of the head and neck, a kilt made of strips of leopard skin and green leaves round their arms and legs.

4: Stanner D-5 (ca. 1909) 1910 FT7 Yao Marawi P&H

MORALS.

The teaching of morals, of what constitutes right and wrong, is one of the chief features of the initiation ceremonies. A man must be brave in warfare without fear rush into the middle of the battle. He must be just in hearing cases brought before him to settle. He must keep his wife in subjection (a man who is unable to beat his wife is looked down upon as a coward, as is also a man who would beat a child). Elders are always respected. Sexual power is not so much admired as one might expect. The only vice abhorred is apparently eating of the flesh of the dead (*Mphiri*). Adultery was the fault most severely punished in the olden days. Any crime was judged to have its equivalent in payment and was not condemned as bad in itself.

At the present time a man may make money by his daughter's vice, but society does not cast him out, though he is considered "a bad man."

Bowling from other tribes was of course opposed; wives and slaves may be beaten, not children. A man visiting another village, if known, would be received as a brother; if unknown, he ran the risk of being there and then murdered, even though of the same tribe.

Food is always shared by any acquaintance.

Lying is not considered wrong in itself, but the breaking of solemn oaths is condemned. Gluttony and over-drinking is not condemned. Neglect of the aged is common and hardly noticed.

General courtesy is lamented, and many things are not considered "good manners." It is considered bad manners to touch the fire in another's house, also to take food from a basket which a woman is carrying on her head, or to uncover food she is carrying, or to uncover a cooking pot; it is said to be as great an insult to her as if her cloth were pulled off. If any of these things be done she would intimate that the offender has never been brought up, and ask him some question relative to instruction received at his initiation; should, he be unable to answer he would be labelled a fool and ridiculed. Yawning, spitting, belching, etc., in company or in the presence of a superior, of a woman in front of her husband, of a man in front of his chief, is ill-mannered. Should a man in an assembly of headmen break wind a small boy will say he did it and receive a reward here.

RELIGION.

With regard to "soul" the original idea apparently was that all men at death yielded up their spirits, *mizimu* (p. 418, Scott's *Dictionary*), to the place whence they came, *Mlungu*. *Mlungu* means rather to mean the spirit world, as it is never endowed with any form—of man, for instance; and it is quite impossible for the natives to have conceived an abstract Godhead. The word *mlungu* has latterly been used as a translation of the word God, used by various Christian denominations.

The *mizimu* is not tangible, and has no substance, but has the form of the man, and when set free from the body can talk and can do practically anything. The

4: Stanner D-5 (ca. 1909)1910 FT7 Tan Marav. F24

774 seniors may leave the body of a man asleep and appear as a dream to some other man, just as the spirit of a dead man may appear in a dream; spirits are not visible under other conditions.

The spirit is said to leave the body of a dying man before death at the time when
774 he becomes unconscious or comatose. His shadow, which is part of the seniors,
775 leaves the body at the same time. The seniors may appear to men at some distance away at the time of death of a man. The inanimate objects appearing in a dream are seen by the dreamer's seniors, who is abroad among the objects seen.

The lower animals are said to have spirits, but these cease to exist with the
774 death of the animal; a native will talk to a dog and believe it to understand him just as a white man.

I have once heard of a case in which a much beloved dog was buried with its
769 master, but I was informed that its soul would not accompany that of the dead
774 man, although the act would seem rather to contradict this.

To the dog is ascribed intelligence, and of the baboon they say that "it 'knows'
[825] a great deal."

Plants and inanimate objects are not considered to possess seniors. The pipe-ons, etc., buried with the dead of course were for food; in the case of slaves buried they would accompany and attend to their master.

The spirits of the departed retain their former stations, thus the seniors of a
775 chief is a thing of greater account than that of an ordinary man. It is thought to continue to hold a directing influence on the well-being of the tribe. Before setting out to battle, before moving the village, and so on, offerings of beer and flour will be put on his grave and his intercession asked in respect of the coming event. The appearance of the spirit of some departed person generally means that it considers itself forgotten, and is the sign for putting flour on his grave "to keep him quiet."

The spirit of a murdered man may sometimes haunt the murderer, for this he takes medicine, but the seniors is a good spirit and does no harm. The seniors may visit anyone in his dreams; they often haunt burial grounds, they never enter into the bodies of others, and there is no transmigration to animals (see *Mphiti*).

The seniors may visit the earth at any time, but their general residence is *Mlungu*, a phantasmal place above the sky. The seniors when it leaves the dying body goes upwards. The only people to visit *Mlungu* and come back are occasionally children who die, for a short time their seniors goes to *Mlungu* and returns; they live again, but are dead seniors.

There is no underworld, but a "bad man" is thought not to go to quite the same place as others; there is no idea of punishment or hell fire, however. The spirits in the spirit world are supposed to sit about doing nothing; they talk and see everything going on on the earth below. From what I as been said before it seems that they suppose chiefs will remain chiefs in the spirit world. They do not appear to speculate about going to the spirit world, and as they do not think of any retribution to be dealt out it makes no difference to their conduct on this earth.

4:Stanton D-5 (ca. 1909) 1910 FT7 Yao
Marvi FR4

Evil spirits, named *mazimbu*, are said also to exist. "They are like *mizimu*, only 776
come to do evil and can be seen in the day-time." Such spirits may possess a man
and cause madness, *mizimbu*; a man so possessed can be cured by drinking and [755]
washing in medicine. Again *mazimbu* may live in any big animal, but not in
inanimate objects. Charms are worn against *mazimbu*, a custom taken by Matenje [751]
from the Machinga. A case of insanity due to *mazimbu* after death yields up
mizimu, not *mazimbu*.

There is really nothing in the nature of exorcism, spiritualistic séances, or 771
medicine, neither fetishes nor idols. There is no nature worship and no nature
spirits, save perhaps in a few cases, *Mpambe* (Chinyanja) or *Chinde* (Chipeta), the [772]
lizard-crocodile, who lives above (*Mlungu*) behind the clouds coming forth as
lightning trying to kill men, making a noise (thunder) as he retreats again. In the
absence thus of any definite religion there are of course no temples, priests, religious
festivals, etc.

At Zambo, in Monkey Bay, Lake Nyasa, there is a rock with a cave in it 776
where it is stated certain evil spirits (*mazimbu*) dwell; these come out with their 779
children walking on the water to any passing canoe, and if gifts are not made to 833
them the canoe is upset.

On the hills near Kachindamoto, on the north-west arm of Lake Nyasa, there is
said to be a big flat stone on which are the footprints of man and all the animals [775]
which emerged from a hole in the stone. This is a story believed by the
Chipeta and Matenje.

Mlile is a name giving to a path (? hypothetical) which is used by spirits, and
which never crosses a river. It runs from Chirumo *viâ* Mlanje, Zomba, Chikala
Mangoche, Kwizimba, Mzumba, round the north end of the Lake, keeping on the
highlands back through Angoniland to Chirumo.

Mphiti.—If a man die, a relative commonly is accused of causing the death. 761
Recourse is had secretly by the brother of the deceased to the *Wolondola* or 695
Mwaiwanda, who by means of the *nkwa* answers questions put to him. He then 754
tells the deceased's uncle, who calls in all the relatives and informs them of the
death having taken place, and from the chief asks that the accused may drink
mwavi; this is done unknown to the accused man. Next morning, all the relatives
are called upon to drink *mwavi* by order of the chief, prepared by the medicine-
man (*Mwapondola*)—or it may be given to the accused only, he asking to be
cleared.

The man who cannot vomit up the ordeal poison dies within half-an-hour,
thereby confirming his guilt and showing that he was *mphiti*.

Some *mphiti* are not flesh-eaters, but the majority kill their victims that they 754
may eat human flesh. The sleeper, on the same day that his victim is buried, beats
his little drum and lights a fire about thirty to forty yards from the grave at night
that his brother *mphiti* may hear and see. It is said these cannot be seen or
heard by ordinary men—but sometimes the natives say they have seen the fires
of the *mphiti* at night.

4: Stannus D-5 (ca. 1909)1910 FT7 Yao
Maravi FR4

954 The *mphiti* may be men, women, or children—fifty to sixty will congregate over the grave and call the dead man by his child-name; the body comes out of the grave, sometimes they dig, sometimes not—the raised man comes to life when he comes to the surface and looks round, but cannot talk. He is killed by being beaten with the tail of the *Kindi* (black-tailed gnu) filled with medicine—the flesh is divided up, filling as many as one hundred baskets, the man who killed having the first to eat, the others any part. The bones are kept[1] sometimes. The grave is opened up and nothing left there. The *mphiti* are said often to take the form of
[825] animals, most commonly the hyæna.

WITCHCRAFT, ETC.

Mphiti.—A man wishing to cause the death of another, if a relation, will find a medicine-man and get him to make medicine which is placed under the door of the hut of the man whom it is wished to kill, or it may be that he simply states that the death of so and so is looked for, making certain signs. A man who is not a relation will be asked to come and drink beer, and in the beer which is given to drink is put medicine such as cannot be detected. The man may suspect that he has been poisoned and consult another medicine-man to give him an emetic, and I have heard it stated that men have been known then to vomit needles and pins which have grown out of the medicine. Finely-powdered glass, I believe, used to be given.

Cursing and evil-wishing are found in the expressions:—

[578] *Ulufa*=may you die.
Ikulume njoka= may a snake bite you.
Ulugwira nkango=may a lion seize you.
Ugwene ingwe=may you be eaten by a crocodile; may you drown; may you have nowhere to sleep.
Kufele kutali=go and die presently, etc.

They are believed in to a certain extent, and in some cases a man thus cursed will starve himself to death.

The hair, or the nail of the little finger, is cut while a man is asleep—this is fried with medicine—the victim is then invited to drink beer, the medicine-man pretends to drink and drops a little of the prepared medicine into the cup: the other then drinks and dies in two or three days.

Ku-lodza=to make medicine against a man, the medicine being kept by the maker. On the other hand, medicine may be placed at the victim's doorway, or it may be buried under a path along which he must pass—here it will have a selective action for the intended victim only, who dies soon after he has passed over it. Other magic medicine is that used by a thief, he presses on the ground outside the hut with the tail of the *Kindi* (black-tailed gnu) causing every one within to sleep; then

[1] Such a bone filled with medicine is used to perform tricks, and I was told by a native that he had seen a hut and its contents burnt, and come back in the beer complete—this was a trick.

4: Stannus D-5 (ca. 1909) 1910 FT7 Yao
Maravi FR4

the door is marked with medicine and it becomes unfastened; the occupants can then be asked by the thief where things are, they answer the questions in their sleep and never resist. My interpreter, one of a party of ten men sleeping in a hut, was thus robbed together with the others, not a stitch of clothing being left on them, and the door found open 754

In a case heard at Fort Johnston 23.11.07, a native was indicted with having threatened death to another man, whose wife he wanted to marry. He was said to have stated that he should take one of his medicines which would turn him into a lion, and as such he would kill his victim. His medicines consisted of *Chiwalula*, a name given to any poison, made from pounded fruits and roots and kept in an iron phial, to kill people with; *Mwago* or *Lazemba*, a name given to medicine which is also kept in a small horn[1]—this is the house-breaker's medicine, which when pressed against the victim's door causes him to become unconscious of anyone entering. This same man was stated to have given a man medicine for his wife one day who was sick—the following day she vomited a needle; the needle was preserved in a piece of grass stalk, and should the man wish his wife any ill he had only to place the stalk with the enclosed needle at the doorway of the hut and when she stepped over it the needle would once more enter her body and might kill her. To another man he had given instructions to make a small cut on the nates with a razor, and rub in some medicine whereby he would become a lion, or if a cut were made perpendicularly on the forehead, others on the neck and nates and medicine rubbed in, the man would thereby gain a knowledge of medicine and be able to kill people.

Ula.—The *ula* man or *mwalu wa ula* is called on to cast lots in a great variety of circumstances—to find a murderer, to say whether such and such a journey will be good. His outfit may consist of the following:— 787 [791]

Tsupa or *ndumba*, a gourd, to which usually strings of beads and pieces of skin are attached; in it are contained the *mawali* or *mpingiri*, which consist of a great variety of articles such as short pieces of wood, some of them charred, the dried curled tendrils of some climbing plant, the body of a certain beetle, pieces of pottery, the tooth of a pig, etc. In casting lots, some one or more articles are made to jump from the gourd which has been shaken in the left hand, the right agitating the while a rattle (*mwanji*). (Plate XXVII, Fig. 4.)

In the case of a man losing a brother and supposing him dead at someone's hands, he goes to the *ula* man, who asks him what he can do for him. The man first of all states a number of things he does not want to know about, such as "Someone has stolen my cattle," etc., each time the *Tsupa* is shaken and the *mawali* regarded, each time the *ula* man replying, "No, that is not what you have come about; but what is the matter is that your brother has been killed," and this he confirms by looking at the *mawali*. The man may ask why he was killed, the *ula* man

[1] Medicine made by extracting the fat from faeces by boiling in water mixed with charcoal and other substances preserved in the tail of a gun.

4: Stannus D-5 (ca. 1909)1910 FT7 Yao
Maravi FR4

787 suggesting that it was due to a quarrel some years before, and again consulting the *ula*, tells the man to go back to his village to see the man with whom the quarrel was.

He goes back and makes out his case as we have seen. A case I remember, in which a man accused of theft went to a native of my acquaintance, who gave him one medicine to bathe in, another to put under his tongue, and another to put between the great and second toes, this to make his accuser "speak little"; then by night he went to the *ula* man, asking him to cast lots to say whether he would be put in prison the following morning by the magistrate on the station.

A man wanting a good job will consult an *ula* man who possesses *upasi*, a [789] medicine made of charcoal and oil. He is put on either side of the chest and the medicine rubbed in—other medicine is wrapped in paper and cloth and worn round the neck=(*Njerezi*); a woman would have two small cuts made above the pubis and two others in the small of the back, and the *njerezi* would be worn round the loins.

The *ula* man also has a tortoise suspended between two cross sticks—this is made to move along the ground by holding the two sticks; if the tortoise moves straight it is a good sign, *i.e.*, a journey would be well undertaken, or such and such a man would not have to go to prison. (Plate XXVI, Fig. 4.).

Two other forms of apparatus are used to answer yes or no, these consist of a gourd or small horn strung on a piece of string; the string is held vertically between the hand and foot, the gourd or horn brought to the top and allowed to slide down the string; if the fall be uninterrupted, all is well. By pulling the string taut the fall can be checked at any point, thus the result of the test depends entirely upon the operator. (Plate XXVII, Fig. 3.)

Galagala.—The dried and partly mummified body of a squirrel containing the skull is also used as a sign. It is held by the tail and stroked downwards with the words "Speak, oh squirrel!" "Speak, oh squirrel!" It is then spat upon: if it fall to the left, it is negative; if to the right, a positive sign such and such a thing will happen. (Plate XXVI, Fig. 9.)

The *ula* man does not belong to any set or caste apart, but may be anyone, and 791 may have any other occupation—he may have some knowledge of drugs, herbs, etc. The remuneration for advice given is a string of beads (about 1 foot long) or a fowl. He is commonly thought well of, and in consequence of his calling never comes to a bad end.

Magic=sleight of hand, *Tsinga*, is only practised by coast men. Casting lots to [789] ascertain guilt is also called *Tsinga*. A man practising such things is called *Wa-tsinga*.

Trials by Ordeal.

695 a. *Mwavi.*

b. *Unke.*—The unke man (*mant-* we *unke*) puts a pin through the lobe of the ear of the man accused of stealing. Should blood appear and the man evince signs of pain he is guilty, and vice versâ.

4: Stannus D-5 (ca. 1909) 1910 FT7 Yao
Maravi FR4

c. *Boiling water.*—In cases of theft used to be used. 695

d. *Kabrundula.*—In a case where a man accuses another of eating human flesh or sometimes simply of stealing. *Kabrundula* is called with his big horn (eland) filled with medicine; this horn is then given to anyone who holds it by the small end, the other end resting on the ground. It then starts to travel without being pushed to the place where the flesh or other goods are hidden, thus confirming the guilt of the accused.

Mwavi ordeal.—(Among Nyanja.) The start is made early in the morning; the medicine-man, who has come to the village the night before, is ready with his little wooden mortar into which he chips the bark. A man and woman to stand by the mortar are picked out by the chief or headman, the men and women stand in line, a woman behind each man. If a chip flies out during the pounding towards the woman, women will die, and the converse.

Often the medicine-man himself pounds; he then sends two, three, or four people to fetch water which is poured into the mortar, then after walking round the crowd he dips out a small cup half-full, and gives to the man and the woman next him, who say, "*If we are sphati* let this kill us; if not, may we vomit before the sun gets hot" (8 a.m.).

Then all drink, starting with the headman; each man drinks with a woman, generally man and wife. After they have drunk they sit down. Those who are going to vomit kneel up with their hands on the ground in front—those who are going to die, sit still and do not talk. They throw their heads from side to side, and fall backward with convulsions. There is no beating of drums and no special dress worn. Death takes place in 5 to 15 minutes—nothing is said by the medicine-man, who looks on, or else goes away immediately. Those dead of *mwavi* are dragged outside the village and burnt together with any of their medicines. The medicine-man is paid with calico taken off the dead.

SUPERSTITIONS, ETC.

If a man sleep with a menstruating woman, or should menstruation start during the coitus, he will fall sick and die if no medicine is taken. A menstruating woman may not put salt into the food she cooks, otherwise those eating it will fall sick. This custom, I found, applies to the native-made salt (*chickere*), but not necessarily to salt bought from Europeans (*makere*). During the pregnancy of his wife the husband will not commit adultery, otherwise she would die. In the event of the wife dying the husband is often accused of having committed adultery. 841 843 837

Love potions are given and taken. 832

Mlotola: a woman takes a little *mapiro* (millet) in grains and puts on the calico she wears as a diaper both during and without catamenia, till the grain is rotten;

4: Stahnus D-5 (ca. 1909)1910 FT7 Yao FT7
Maravi FR4

M 832 this is then added to a brew of new beer and given to her husband to drink. He will then think of and love only herself. This is said to have caused the death of some husbands.

Mpasi: medicine made and drunk by a woman to make her beloved by a certain man.

M 837 844 [847] At confinement a woman has to answer whether she has ever committed adultery; if she denies an adultery she may die, if she owns up and gives the name of the man this can be remedied. Adultery on the part of the father or mother is said to be a cause of abortion.

M 837 A man going away from his village for several months and leaving his wife behind and wishing her to remain faithful puts a knife into its sheath and hangs it in the hut, telling his brother. It is then believed that should anyone commit adultery with his wife separation after the coitus is impossible till some third party comes and pulls the knife from its sheath, and in doing so becomes a witness of the adultery.

M 833 Eating of eggs is believed to cause impotence in children or adults. Much fat eaten is said to have the same effect. It is believed that if a hare run up against M [242] the leg of a man while going through the forest he will become impotent. It is [825] for this reason that dung of the hare is put at the door of a man to make fun of [522] him as impotent. This is a trick played by *Adzukulu.*

M Y. 837 263 755 If a woman who has committed adultery puts salt into the food while cooking, of which her husband will partake, will thereby cause his death. At the present time among the Yao-Malanja community a woman always calls one of the children to do it—this speaks for itself. A woman, after connection with her husband, putting salt in food, may cause illness among any children partaking of the food.

M 837 If a man accuse his wife of adultery and she denies it, he will procure medicine and place it under her pillow, then in the middle of the night she will wake her husband and tell him the name of her lover.

M 787 777 *Mpingu* = ill omen. A journey would always be stopped if on setting out one of the party die; or should they meet an ant-eater or black snake. It used to be considered a sign of bad luck if one of them knocked the toes against a stone; now if blood flows from the big toe they say it presages good luck.

Y 852 826 The Yao at the age of sixteen years climbs the *mtumbe* tree, and finding a fruit which is soft makes a hole in the middle and inserts the penis. After this procedure the penis is said to enlarge as the fruit grows; when the size desired is reached the fruit is cut down.

M 827 The native says that every one has a small animal inside the ear, the sounds it makes causes the man to hear. If the animal escapes the man becomes deaf. The animal is said to be ½-inch long, and wax is said to be its excrement.

M 484 777 Where a man rests on a journey he often puts a stone in the fork of the nearest tree; on many journeys there are regular halting places, often at cross roads, and here every passer-by adds a stone for luck, making quite big heaps.

4: Stannus D-5 (ca. 1909) 1910 FT7 Yao FT7
Maravi FR4

A man seeing a cloud coming up and wishing to prevent rain, ties a knot in the grass by the side of the path along which he is going. M 789

In January, 1907, there was a drought in Fort Johnston district, so the chief Mponda and all his headmen visited a man called *Bimbi* (*bimbi* = prophet), a lesser chief, to ask for rain. They all adjourned to the forest, where *Bimbi* received them outside a hut, and having taken their presents, 50 yards of calico or less, he entered this hut and for a quarter of an hour went through certain incantations. He then appeared again and asked what was wanted. He was asked to give them rain. After again entering the hut and conferring with the spirits he announced rain for a certain day; this was received with clapping of hands, and then everyone lay down prone with the hands by the face and heads towards the hut. The spirits are said to be a male and female snake. God is said to speak to these, these to *Bimbi*, and *Bimbi* to the people. Rain did not fall on the day mentioned, but soon afterwards. 821 [776]

Chisimba: a man wishing to have medicine to make himself bullet-proof would be told to have coitus with his sister or mother. This is *chisimba*, after which medicine is given to him. A man known to have done this near Mponda's village was threatened with death by Mponda, and therefore fled. M 789 835

Testicles of sheep, antelopes, etc., are eaten usually with medicine with the idea of gaining sexual power. M 831 825

A chief eats alone to avoid being given poison. M 264

A woman in child will not look at a picture or image lest the child be born with some deformity. Fright is said to cause monstrous births. 622 M 843 [845]

A woman, when she conceives for the first time, that is, when a newly married girl is pronounced to be *enwinte* by her mother, attends a dance, and her head is shaved in front as far back as the ears. She may not talk to any man except her husband for a month. In older times this restriction extended till the time she was confined. M [302]

A man used never to speak to his mother-in-law till after the birth of his first son. Neither a man nor his wife will eat in company of their mother or father-in-law until after birth of a child. If a man sees his mother-in-law eat he has insulted her and is expected to pay damages. If a man meets his mother-in-law coming along the road and does not recognise her, she will fall down on the ground as a sign, when he will run away. In the same way a father-in-law will signal to his daughter-in-law; the whole idea being that they are unworthy to be noticed till they have proved that they can beget children. M 606 M [689]

CLANS.

All Mananja, Yao, Makololo, and Chikunda tribes are divided into clans, each with a separate name. Children take the clan-name of the mother, and members of the same clan are regarded as brothers and sisters; they are blood relations and may not intermarry. M Y 614

4: Stannus D-5 (ca. 1909)1910 FT7 Yao FT7
Maravi FR4

M Y 614 [579] Men of the same clan must help each other. Two men of different clans fighting will be joined each by men of his clan; such two men may be interfered with and stopped fighting by someone of the same clan, but not by others. A fight between men of different clans is a lasting thing, not so a quarrel in the clan.

Every clan has a (king) *Karonga* and a (prince) *Chilembwe*, who is his son. These grades are only found among the Nyanja peoples.

M Y [264] [554] The Karonga may break bones when eating—this is significant of his power to break anything; the Chilembwe may not do so, being without land. Neither may eat while walking. These two are always chiefs.

Clan names.—In Machila men's songs one hears a number of clan names repeated sometimes.

After sneezing people sometimes exclaim, "*Mwana wa . . .*; *Mdzukulu wa . . .*; *Kubala kwa . . .*" (giving name of clan).

A man hearing another say this asks him, "Where do you come from?" He tells him, giving him names of his father and mother, etc.; if he does not know them he gives names of generations before.

The following are a few clan names:—

Achitolo, small rat.
Anamvula, rain.
Arimbiri, puff-adder.
Achikalembo.
Achikulina.
Achingwmina, thunder.
Achimaunde, cloud.
Awwali-mgwi, hartebeeste.
Ambiwi, pig.
Ang'oni, birds.
Achiwombe, fish.
Achinawombe.

MARRIAGE.

M 584 A man seeing a girl he would like to marry deputes his brother to go to the brother of the girl, who then calls the girl's maternal uncle, and he speaks to the mother on the subject. The mother consults the girl; if she refuse, nothing further is done. If she consents, the man calls his relations to come and be witness of his taking the girl as his wife; they meet in the *Bwala*. A house is assigned to the M 585 man in the village of the girl and there they go to live.

After six months the mother of the girl prepares beer. The uncles of the young couple, mothers, fathers, sisters, and brothers are invited. The girl's maternal uncle then speaks, addressing himself to the maternal uncle of the husband, saying, "We have called you here to drink beer and to see the house of your brother that you may return when you like. Should anything arise between these two newly married ones in the nature of a dispute, let them come to their respective uncles about the matter."

Then five pots of beer are drunk in the village, two are reserved for the witnesses to drink in the evening, and one for the two fathers and the headman.

4: Stanmus D-5 (ca. 1909) 1910 FT7 Yao
Maravi FR4

There was no dowry and no giving of presents in the old days, the latter practice being an innovation of the last twenty years. The husband thus introduced (= *kulola*) into his wife's village hoes the gardens of her parents. 585 [583]

No enquiry is made as to the potency of the husband by the wife's side, but his friends may ask him if his semen is good. A man who gets no children is *chembewile*. [833]

It used to be the custom when a marriage took place for the mother and father of the girl to cut a log about 15 feet long by 2 feet in diameter and send this by another daughter to the house of the married couple; this was put in the fire, and the unmarried daughter had to go every day and see that it was still burning. If it burned away before the married daughter became *enerinte* the husband might be sent away as useless. If the couple were much attached to each other the husband would buy a pair of goats and give them to the parents of his wife that the goats might produce young. Where sterility persists for three years the prohibitions against a man speaking to his mother-in-law, etc., are allowed to lapse. 842 585 [606]

After the first coitus the wife wipes up some of the semen on to a piece of white cloth; this in the morning is given for inspection by the girl's instructor, the woman who gave her advice on the occasion of her first menstruation. [833]

The number of wives may be from one or two to six or ten for an ordinary man; for a chief, thirty or forty. A man may not marry any member of his wife's family, nor of the same clan name, nor two sisters, nor a deceased wife's sister. Marriage between people of different tribes did not take place till after the overrunning of one by the other, save in case of slaves and wives by capture. A rich man takes his wives to live with him in his own village, as does a chief. The first wife is the head wife, she does no cleaning nor cooking; a man may change his head wife, but must sleep equally with each wife, otherwise she may bring a case against him; each wife lives in a separate house, occasionally in a room of a large one. Slave wives corresponded to concubines. No polyandry. 595 [582]

At the present time marriage is regarded lightly, adultery is common, and divorce in consequence the same. In former days a man wishing to be rid of his wife ceased to visit her for one month, three months, or six months. Her uncle would then come to the husband and ask the meaning of his behaviour. He would explain that he no longer wished to live with the woman, and gave to the uncle an arrow (*mabei*), calico so given may still be called *mabei*; should the woman marry again she gives the arrow to her second husband. A man deserted by his wife, should there be children, makes a case to have custody of them. 586 [837]

As children, boys and girls play at being man and wife, building little houses in the bush and sleeping together; this is known as *masanje*. Promiscuous sexual intercourse among girls before puberty is common; in this way the vagina is usually dilated and no operation for so doing is performed. A virgin on her marriage is "broken" by a friend of the bridegroom before the latter cohabits with her. The friend is said "to eat new things"—*Kudia ujobwa*. 836 857 [585]

4: Stannus D-5 (ca. 1909)1910 FT7 Yao
Maravi FR4
Ngoni FR5

M 831 514 A boy having an emission in the night will take his soiled cloth to the headman of the village. He says, if the stain be black, that the boy must not marry as he will be impotent. A man who has no erection when evacuating the bowels thinks himself ill, and will seek medicine.

M 841 145 [881] Menstruation usually commences from twelve to fourteen years, when the breasts develop and hair appears on the pubes. I am inclined to put it later than has commonly been stated.[1] The women dance, and instruction is given to the girl who has just arrived at puberty. The Yao no longer hold a dance. Menstruation is said to appear in those who grow fastest at a somewhat earlier age. It is said never to be deferred. Women state that they menstruate once every moon, the flow lasting from three to seven days; if for a longer time it is due to some sickness (menorrhagia is not uncommon). There is no purification after menstruation, but a wife sleeps apart from her husband, *i.e.*, on another bed, and she may not put salt into the food.

M 145 Boys, I should say, attain puberty at fourteen to fifteen years, when change in the voice takes place. The average age at marriage I should judge at seventeen and fifteen respectively in male and female. This of course only refers to first marriages, and when no hindrances occur. N [582] [Among the Angoni a man was not allowed to marry until thirty years of age, a woman twenty.] The child-bearing period lasts about twenty years.

M 842 It is believed that the child is formed only from what the man introduces into the woman—the semen. The average number of children in a family is three M 163 to five; out of every five, only three survive to adult age. The number of boys born is greater than the number of girls. Pregnancy in a woman is said to be M 843 known by the head woman, by her becoming paler. After pregnancy is detected, husband and wife live together, and coitus continues to take place, for some time; with some only for the first six weeks.

M 844 Labour takes place either in the woman's own house or in that of her mother. She is assisted by a midwife, generally an old woman (not her mother). The patient sits on the floor of the hut or an old mat naked, half reclining on the midwife, who kneels down behind her and presses her abdomen with both hands. No internal examination is made, and no assistance is given in cases of difficulty. M [845] The duration of labour is from one hour to five days, ending in death. Mortality from obstructed labour is high, in contradiction to the ease with which natives are usually said to give birth to children. The umbilical cord is not divided until after the birth of the placenta, and then close to its placental attachment; it is not tied. The whole length is bound to the abdomen of the child by some calico, M [278] separating about the seventh day; medicine is then applied to the umbilical scar, consisting of the charred root of a tree mixed with oil.

[1] It has been told me that menstruation used not to occur until the age of seventeen, but that of late years, on account of free sexual intercourse before puberty, it is earlier, and therefore the child-bearing age is earlier, sixteen instead of eighteen.

4:Stannus D-5 (ca. 1909) 1910 FT7 Yao
Marovi FR4
Ngoni FR5

The placenta is buried in a refuse heap,[1] outside whence it is sometimes said to be stolen by *upkiti* (evil spirits) to make medicine. A cual is known, and now is said to be caused by the father continually wearing a hat. It is not kept for any purpose, so far as I know. If a woman die with the child unborn the child is cut out through the abdomen, when the body is in the grave, and the two bodies then buried together, the reason given being that if this is not done many other women would die in the same way. Cesarian section is never performed; a still-born child is buried in the refuse heap; there is no treatment for still-birth.[2] Miscarriage is said to be common. Post-partum hemorrhage is said to be one of the frequent causes of death. M 844 M [845] M [766] M [845]

After the confinement the whole body is washed, and then a piece of burning wood is placed between the legs of the woman and allowed to smoulder for several hours; this as a means of purification. M [783]

The woman stays in the house for a week. She does not resume sexual intercourse with her husband for two years unless she is the only wife, when six months to one year is allowed to elapse, though she cohabits after one or two weeks. During the puerperium there is no special diet. The child is suckled for two to three years by mother, or grandmother if the former die; or if neither are available, by the aunt (maternal). Death of the child may ensue as the result of being suckled by others. Suckling sometimes prolonged for four years, belief holding that thereby pregnancy is prevented. M 846 M 853 M [842]

After miscarriage the woman remains in the house only two days, but has to take medicine for six months, abstaining from sexual intercourse for half that period. Medicine is frequently taken to cause abortion, and may be made by one person to affect another; it is taken when a period is missed. Sterility is said to be common among women. No artificial sterility is produced, but medicine is taken and a cord run round the loins to prevent pregnancy supervening. The new-born child is first washed in ordinary water and then in the water in which a man and his wife have washed after coitus. After this the other women may touch the baby, but not young girls, otherwise it might die. If it die before it has left the house it would be buried by women just as a still-born child, the men refusing to assist. After the cord has separated (one week) the child and mother leave the house and appear in public. The child's head is oiled this day and sometimes medicine made of charcoal is pasted on with some beads as a preventive against injury by the strong sun.[3] M 845 M 846 M 302 M 751

The child is named usually after the maternal uncle's child-name which is given by the uncle (Nyau). M 551

[1] In an Angoni village a woman I saw buried the placenta under the floor of the hut, using a hoe to dig with, upon which she first milked her breasts—the first milk. This to prevent abscess in the gland. M 751 M 844

[2] With still-birth, women accuse their husbands of having syphilis, and "a child is often born with sores on it." M 845

[3] Medicine called *Ifyandabwe*, see p. 326.

4: Stanmus D-5 (ca. 1909)1910 FT7 Yao
Mocrav. FR4

845 Mortality among twins is high, they are always treated alike, and, as children, wear similar clothes. They are not liked very much, but are not killed. Deformed children are killed at birth, being strangled by the women in attend-
847 ance. I have only seen one case of marked congenital deformity (hands and feet
732 in a boy aged seven years). He was allowed to live after some trouble at the mother's intervention.

The umbilical cord is watched and its separation is awaited, the child is laid on
896 its side so that on separating the cord shall not fall on its genitals, as this would
[833] cause the child to become impotent. The cord is buried under the verandah. This day the child and mother are shaved, a tuft of hair is left over the fontanelle
[751] of the infant (Fig. 7, *g*), on which is applied medicine called *Pfundabwe*. This is applied at intervals till the closing of the fontanelle; its action is to prevent the harmful effect of the sun. The child is given its name by a godmother (Chipeta).

The child is steamed as a preventive measure against *mwabu*. The house
751 among the Nyasa is not replastered and the efforts burnt as with Chipeta. The
896 *mtuhwi* (or *mtwi*) belt is applied immediately after the child has been washed. It is made from the *nsaw* (*mlaw*) used by the mother to wipe her husband and herself after the last coitus at the time she found herself with child and was
[572] cleansed. It has been preserved by the woman's mother, and is put on the child by the woman's friend, *i.e.*, the woman who gave her her name as a child (in some cases a man's second wife or his sister may perform this function). This belt is left on the child till it falls off, or is taken off by the child itself. *Mpeto* is medicine placed under the sleeping mat of man and wife when he resumes inhabiting same house.

Four to five is said to be the average number of children born to one woman,
163 twelve being the greatest number known. One or two of the family commonly die in infancy. Twin births are said to be common. I have only heard of one triplet birth, mother and all three dying.

A woman not wishing children will take medicine if her period is two or
892 three days overdue. Sterility among women is fairly common; a sterile woman is called *chwaba*. Medicine is taken for this condition.

833 Among men, want of virile power is complained of frequently, but they expect too much and take many drugs in the hope of improving matters.

848 Child-birth out of wedlock is no cause for reproach; the child belongs to the mother.

The population is increasing. Mortality is high among children owing to
161 wrong feeding: at three months [illegible] is given and at eight months porridge, big
853 lumps being thrust into the in[illegible] mouth; at twelve months green *chimanga* is
165 given. Diarrhœa is a common cause of death, also, from one to three years, malaria. The death rate is highest in the rainy season.

4: Stannus D-5 (ca. 1909) 1910 FT7 Yao Moravi FR4

DEATH AND BURIAL CEREMONIES.

A dying man is attended by his wife or wives, his eldest sister, and sometimes his mother. His head is always supported all through the twenty-four hours by one of his women-folk. I saw the headman, Mtewera, when very ill, supported on the laps of four of his wives. When the women see the man is just dying they go away, and his brother and male friends come in and stay till after he is dead. A woman is tended by her mother or sister, her brother and husband being present till after death. The woman's corpse is prepared for burial by the women. In the case of the man the uncle and brother at death cover the body and then ask some friends to act as *Adzukulu*. There are usually two or four of them. 763 764

They prepare the body by washing in water, straightening the limbs, closing the eye-lids; cloth (or bark cloth) is put round the loins. A woman is covered to the breasts; any bangles, etc., are left on, and oil and beads are put on the hair. The body is then enclosed in a sleeping mat—usually a new one. Thus prepared the deceased lies in his own house for two or three days. The relations are summoned; wailing is commenced immediately after the toilette is complete, the wife and some twenty or thirty women taking part. If the wife is being mourned the husband sits outside the hut. The body is on one side of the room, the wailers sit with extended legs on the other side, the *Adzukulu* playing *Nsewedzi* on four drums. This is continued for three days. If the relations are far away, mourning goes on for one day and then begins again on their arrival. The wailing continues till 10 p.m., and after two hours' interval for rest and sleep, is again continued for one hour, *i.e.*, 12 to 1. It is started by the wife, who is immediately joined by the other mourners; a second interval occurs from 1 to 4 a.m. The wailing ceases about 4 p.m. on the second or third day, so that the burial may take place just before sunset. The grave has been dug in the day-time by the *Adzukulu* at a spot a little way outside the village (*Malanje*), indicated by the medicine-man, who has been consulted in secret by the dead man's brother—the spot being encircled by medicine. [516]

The body is carried to the grave by the *Adzukulu*, four of them carrying it, enclosed in the mat, by two poles, one fastened on either side, supported on their shoulders. They are preceded by one of their number carrying three or four pigeons tied by their legs to a stick or a flag, held up aloft and carried. Beer is also, on passing cross roads, poured on the ground on the spot marked *x* in Fig. 2. Behind the body come the other *Adzukulu* and some men, playing drums and singing; sometimes women sing *Kanyo* followed by the wailers. The singers and wailers remain about fifty yards away from the grave, the rest going to the grave. The two head *Adzukulu* descend into the grave and receive the body from the others—no rope being used to lower it. The grave is 6 feet deep, always east and west, but the head of the corpse may be either end, and the body is turned to one or other side, facing a small hole hollowed out at [182]

FIG. 2.

4: Stanner D-5 (ca. 1909)1910 F77 Tao Marc: FR4

764 one side, into which the five pigeons and two small pots of beer are put. The women and children first approach and throw earth into the grave: this to prevent them dreaming of the dead. The grave is then filled in with earth and a heap made over it.

In returning from the grave the *Adondole* go first, then the deceased's brothers [783] followed by the rest. There is no singing. They now go to wash at a stream. [515] There is no precedence in washing, but they never on such occasions rub each other's backs. The washing is done as a purification to wash away ideas of the dead. After washing, the *Adondole* take a hoe which has been used at the burial and walks a hundred yards or so and then make a cut in the ground with it, one after the other each man does the same at half yard intervals, followed by all the women. At 5 p.m. the medicine-men visit the grave with a relation of the dead man. Medicine is put on the grave. The medicine-men carries a stick (*Mwapu*) 764 or fifty sticks, *Kadolowe*; they watch by the grave to see that no *Mphiti* approach. 769 If the medicine-men see *Mphiti*, he asks the other man, "Do you see them?" If he says no, his face is then washed with medicine to make him see, and he answers, "Yes, I see so and so, and so and so." The medicine-man then asks, "Shall I kill them?" If he says yes, they are made to approach by the medicine-man's medicine; then he takes one of his sticks and pushing it up the *Mphiti's* arse breaks off the end (=*Ku-tadolowe*)—the *Mphiti* then goes away and dies later. Return is made to the house of the deceased where the *Adondole* and relations stay and sleep for ten days, fed by the deceased sister, everyone, friends and relations, having brought food (chikhuwa) to give to her on their arrival; any remaining are given to the *Adondole*.

The night sees them dance *Gulewondole* (Vinyau); only the men dance, 535 often naked, the women singing and clapping their hands: no children are allowed 769 to witness the dance. The *Adondole* and members of the deceased's family do not dance; the dead man's father's family, however, may do so (Chiewani). This sometimes is danced for two or three nights. The Vinyau, mbiri or elephant image, [532] made of grass, is brought in on the third night, that is, the evening after the man is buried.

769 The grave is covered by a grass roof, sometimes enclosed with walls. In the [764] case of a chief a big hut is built over it with a fence round; the roof is covered with blue calico with holes cut in it, and inside it is hung with strips of calico. Pots and baskets, broken, are placed on the mound. After a year white calico is put on the grave.

Should the village be moved a pot belonging to the deceased chief is taken 621 with them and buried in the ground in the new village, the mouth being above the 766 surface of the ground: then whenever beer is made in answer to appeals made by 769 the deceased to someone in his dreams, some is put into this pot and calico hung round it on a tree.

In olden times the graves of Matenje chiefs only had a fence round them. When the fence (or roof) has to be repaired the man who is to do the work knocks and, clapping his hands, asks whether he may enter.

4:Stanner D-5 (ca. 1909) 1910 FT7 Yao Marau 194

Again, in old days slaves were buried with a chief instead of pigeons, also ivory 764
and guns, pots and pans, and hoes. Mshanjila was probably the last to be buried
with slaves. The corpse lay on a number of live male slaves. Under such circum- [61]
stances, if a slave sneezed he was allowed off.

On the death of anyone all fires in the houses are extinguished; fresh fire is 341
then made in the dead man's house and passed from hut to hut. The people 372
collected at the dead man's house may only eat food cooked at that house. Eating 344
of food cooked at the house, into which salt has been put, would cause death.

After the lapse of a month the first beer is made, now we anticipate a beer of 775
returnees (*i.e.*, the corpse). It is made from leaves brought by the relatives. 765
Dancing and singing accompany the beer making. The first day's beer is called 302
mon ya n'ntu-wlwaring beer; the second day the *Ahudule* shave the widow or
widower, and then each relative in turn. The beer itself is not used to shave with
among the *Nyanja*. The operation takes place at the door of the dead man's hut.
The *Ahudule* are not shaved. After this ceremony cohabitation between the
people of the village is allowed, the pelele being shaved. The mother and wife or
husband usually wait till after the second beer. A pot of beer is let into the ground
at the head of the grave, at the first beer making.

After six months or one year beer is again prepared—the second beer. Every-
one comes except *Ahudule*. There is much dancing and beer drinking, the idea
being that the corpse has now disappeared, and he will not be remembered any more.
Ipweing takes place on the first night, and beer is drunk on the next day. The
widow shaves the first day before sunset—the brother of the deceased informs her
that she is now free to marry again. The night after being shaved she lies to sleep [91]
with a man paid by her relations. He is called *Fisi*, because he steals his adultery.
No medicine is taken or used for washing in.

For ever after having acted as a *Mhudule* a man is expected to behave as a 767
funny man. He may swear, use obscene language, insult people, commit adultery, 572
make obscene overtures to women, pull off their clothes, etc., take chickens, take
beer and drink it when he sees it being made in the village where he acted. Where
women have acted as *Ahudule* with the men (burial of a woman) they may take
liberties with each other. Any *Mhudule* may play practical jokes on the village.
An old joke played by him was the putting of hare's dung on a man's doorway
intimating that he was impotent (*A-Nyanja*). At Likoma (*Ahenya*) grass was
knotted up in bunches all round a village by *Ahudule* in jokes, again intimating
that all the men of the village were impotent.

In the vicinity of Fort Johnston every year each person takes a maize cob at 767
the time when it is ripe for eating and puts it on the grave of the old chief 243
Mpondo; this is also done with sorghum always before any of the crop has been taken
for food. Maize cobs are also presented at the grave whenever *Likoma* or
Chindande is dressed.

After the death of a wife the husband mourns five or six months and is then 597
given medicine, after which he may marry again, and without which, should he 765

4: Shanna D-S (ca. 1905)1916 FTT Tan FTT
Mbraw: FRH
Ngoni: FRS

M 587 365 [555] many, his new wife would die. A widow after her period of mourning of two or three months, if sought in marriage, sends her sister to her sister, who arranges for some other man to have relations with the widow, after which she is ready to marry the widow. Without this her second husband would die should she have committed adultery.

M 587 622 After the funeral of a chief the headmen of the district call the chief Mkwabula, who buried the late chief, and hand him a red blanket and tell him to cover the man who is going to be chief. This he does, at the same time hitting him hard on the head. This action is received with shouting from the women, who put ashes on their heads. He then sits surrounded by his headmen and sisters at one end of the open space, the headmen at the other, the backs of whom give a screen.

M 766 At Chipoli on the south-west arm of the Lake the corpse is wrapped in a mat and weighted, and then sunk in the lake. The same practice is followed occasionally at Monkey Bay; it is done with the idea of avoiding interference by Mphiri.

Lepers and persons dying of small-pox are not buried; the former are thrown in the bush for Mphiri to eat, as it is thought the disease is spread if they be buried. A man accused of Mphiri and dying of sweat used to be burnt on a pile of wood.

M 622 766 [Note on Angoni.—In the case of a chief the body was kept ten days to be sure of death; it was arranged in a sitting posture covered with cloth, the eyes open, a stream was dammed up with stones and then a pyre made below the dam and the body burnt, the waters were then let free to wash away the ashes. The new chief stood from morning to afternoon on one foot wrapped in the smoke of the pyre.]

M 155 769 In speaking of the dead the expression, "the late so and so" (= [illegible] . . . .), is used. A man will not refer to children that have died in the presence of his wife, as she will cry either from grief or because it is the custom so to do. Some buried grounds are not approached.

Artificial Deformations.

M 504 [516] At birth pressure is applied to the head of the child to reduce any deformity which may be present—no deformation is attempted. Various practices of piercing nose, lips, and ears have been and are in vogue.

Piercing of the upper lip and subsequent wearing of a disc stick, sometimes a bone (ulone), until the aperture was large enough to admit a much bigger ivory or wooden lip-ring, solid or otherwise (pelele), was practised among the Nyanja women, but it is going out and is now seen only in the old women. Occasionally the lower lip was pierced in the same way. At the present time among the Mankanja, Yao, and many Nyasa women, the left ale nasi is pierced in the same way when a girl is eight years old. When adult a metal or ivory solid ring is worn (ulupini). A woman piercing the right ale nasi would be laughed at and called a fool.

M 718 V [504]

4:Stanner D-5 (ca. 1909) 1910 FT7 Tao FT7
Mbaroi F84

The prince in the case of men is sometimes the seat of a small circular hole originally copied from the coast Swahili whose tribal mark it was, and who did it to prevent enlargement of the scrotum.[1] A small perforation of the labia is commonly seen among the Chiperu-Angoni. These perforations are now, however, seen indiscriminately among various tribes in the country. The former I have seen in a Nyasa—it is also general among the troupes of professional dancing-boys, who wear a cord or a small stick through the ear, usually the right ear. The stick I have seen among Angoni, Nyasa, Mashinga, and Ashewa. No definite earrings are worn. The habit of wearing three or four discs in the margin of the ear is only seen among some women (Zanzibar) who have come to live in the country (Fig. 5).

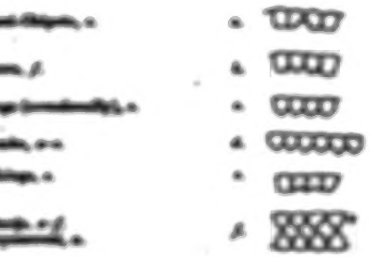

Fig. 4.

Fig. 5.

Dental mutilation was, and is to some extent, still of tribal significance, though mostly performed for appearance (Fig. 4). Actual extraction is but very seldom seen now.

A prominent breast is admired among the natives, and to secure this a cord is tied round the chest by girls at the upper margin of the gland, with the idea of making it project. I am inclined to think it has the opposite effect. No attempts are made to elongate the breasts, they become very pendulous without any artificial aid.

Amputation of fingers and ears, castration, etc., have in the past only been practised as punishment.

Young girls by constant pulling on the labia minora and enclosed clitoris try to cause elongation, as such is said to be admired.

Elsewhere I have referred to the penis of natives, which I consider to be characteristic in its hardness. This is said to be caused by the "young men" purposely injuring the organ by beating it so that it never returns to normal softness when not erected.

Circumcision.—Circumcision is practised by both sexes of all the tribes. In former times the designs had a certain significance, such as to indicate the tribe, to signify that the women had been initiated, to commemorate certain events, and so

[1] This is interesting, inasmuch as the ears are pierced in England, commonly with the belief that it prevents bad eyesight.

4: Stanner D-5 (ca. 1909)1910 FT7 Tao
Repro. FR4

904 Seth; now they are in most cases mere decoration, except among the Awemba, Angoni, and Makua, where the tribal significance is still maintained (Fig. 6). It is still a fairly common practice amongst women to mark events of importance by an addition to the tats, usually on the thighs and abdomen; and individuals may be seen with every available inch of skin covered with designs. A shooting and hunting tats is common amongst older men.

There are two varieties: (1) the common scar tattoo, produced by making incisions through the skin and rubbing in preparations of charcoal which leaves a more or less raised scar darker than the surrounding skin. (Such marks in an albino have a blue colour.)

[177] (2) Marks produced by use of the cashew tree which has been imported from Zanzibar. After its application to the skin the superficial layers peel off, leaving pink skin which then gradually darkens till it is darker than the surrounding skin, but with no scar. These marks are most commonly seen on girls and young women, and some small boys on the face, also sometimes as rows of spots ¼ inch in diameter across the whole of the upper part of the chest.

There is no history of the introduction of cicatrization, both sexes appear always to have been marked—the tribal tatos were in the old days made, in the case of a boy, usually at the age of about ten years by the medicine-man. Now the operation is performed by anyone, it seems, at any time, and any marks are taken. It is rather a fashion, and a man or woman without marks is said to look ugly. Tats designs are usually quite symmetrical, no substances (pigments) being used other than charcoal, the scars being in the form of dots, short or long lines, half circles or lozenges (Fig. 14).

FIG. 6.

ORNAMENTS.

301 There do not appear to be any special ornaments indicating station in life, or connected with dances (q.v.).

302 *Head.*—In the ordinary way the hair is kept fairly short, being cut when necessary and periodically shaved (Fig. 7). Occasionally one sees very long hair standing out from the head 6 inches or more, as in the case of an inmate seen at Blantyre. There is now no very definite meaning in fashion in which the head is shaved; in former times (and at the present time to a certain extent) it had tribal significance. Various dandyisms are now seen, such as a shaved parting ending behind in a spiral. The complete shaving of the head accompanies many ceremonies, principally after the interment at a burial ceremony, and at initiation ceremonies.

[484] A man starting on a long journey will often shave the head. On the other hand a wife left while her husband is away for a long time allows the hair to grow and does not wash.

Ngoni FR5

Marawi FR4

The Angoni men collect little bunches of hair together and bind them with grass so that they stick up all over the head or are restricted to the front part of the scalp where, when they get long, they hang down over the face. Funny hair dressing is never seen among the women except those recently from the west. There is no particular sex difference in methods of "doing the hair"; the mitten is not altered after marriage and no wigs are used, neither are any colours used to adorn the hair. Ornaments worn in the hair are few, consistently some hand-work by young girls or a feather by boys, and more especially Angoni. Combs, ornaments with hand-work are found.

Fig. 2.

(a) Chipeta, "Bantu"; (b) Angoni; (c) Atonga; (d) Mabenga and Nyakinje; (e) "Mitten"; (f) A man who has shaved his head and now shaved another in a few days; (g) Bantu dressing; (h) Nyakinje child.

The amount of hair on the face is very variable, and the treatment of it equally so. As a rule there is little, if any. Epilation is commonly practised and a strong growth of hair is shaved. On the other hand beards, etc., of considerable size are seen sometimes, and these are usually not tolerated. The longest beard I measured was 18 cm. from the chin to tip. It was kept rolled up.

The Atonga seem to have more hair on face than other tribes, their nearest neighbours resembling those seen on Japanese.

Body.—Beads are worn by nearly every woman, either at the neck or round the wrist or the waist.

A string of large blue beads is most commonly worn round the neck by girls and women after *Jagogo*. An initiation ceremonies copper of small blue beads are sometimes worn. These were round the body are single strings of beads of various kinds. They are not always worn, and the wearing I think is discontinued during menstruation.

Bead aprons are found. Beads round wrists and ankles are worn in simple strings. Dancing boys sometimes wear a bead necklace, otherwise beads are never seen on males.

4: Stanner D-5 (ca. 1909)1910 FT7 Tan FT7
Maravi FG4
Ngoni FE5
Senbo FE5

M 501 Necklaces, most commonly for children, are made of a number of little square pieces of hippo ivory strung together, ornamented with geometrical designs.

M 789 Medicine is often carried in a little packet suspended round the neck, as also charms of various kinds. The medicine may be some powdered charred roots or little twigs, leaves, etc., of some tree; these are sometimes now wrapped up in a piece of paper on which is written some extract from the Koran (among Mohammedan Yao); this is then sewn in a little piece of calico and adorned with beads and suspended round the neck with a string.

Charms take various forms. Small pieces of wood or, to guard against attack by lion, teeth are worn. Armlets of the same kind are worn against sickness, and others are worn by Angoni, made of beads to which knives are attached. Bracelets of ivory, plaited grass and elephant tail hairs are also worn.

M 501 Metal and wirework bracelets are commonly worn by Angoni, also twisted wire finger rings and rings of lead and ivory. Heavy brass ankle rings and spiral brass leg and arm rings 6 inches and 8 inches wide are worn by some of the women (Atonga).

M 501 Bracelets cut from the nail of the elephant's foot are worn by Awanda hunters, and little finger rings cut from the scale of the ant-eater are worn as medicine against fever by headmen.

Belts made of twisted copper wire are worn round the waists by Wankonde.

M 502 The use of pigments applied to the body is very limited. I have seen stripes of clayey, white and red, on the faces of young women, boys and dancers, generally after some ceremony. The significance I do not know. Pigments are now obtained from Indian traders, and I do not know how old the custom is. There is no beautification of face, body, nails, and eyes by pigments. The only application made to the skin is castor oil ground-nut oil, to keep it soft—no scents are used.

Clothing.

M 791 Among tribes of Nyanjaland the amount of clothing worn varies very considerably from nothing to European garments.

Of the large majority, however, including Mahaqi people, Yao and Angoni, one may speak generally.

The young children commonly run about naked, or have a strip of cloth covering the pudenda, supported by a string round the waist.

M 791 Among the adult population the amount of clothing depends largely on the affluence of the individual, and those who cannot afford much have little clothing. A man wears a strip of calico supported in front and behind by a string round the waist, a woman a piece of calico 18 inches wide reaching from the middle of the thighs to the ankles.

Of the more prosperous, the men wear calico from a little below the knee to the waist, carefully wrapped round the body, and kept in position by some kind of belt; sometimes it is folded across the upper part of the chest or sometimes crossed over in front and two ends tied behind the neck.

G. Dalgleish D-5 (ca. 1909) 1910 FT7 Tao FT7
Ngoni FR5
Marawi FR4

Women wear their cloth folded across the upper level of the breasts from right to left. Men and women often have two cloths, one over the loins, only the second fastening over the chest.

A nursing woman also wears a small piece of calico corresponding to a diaper supported by string round the waist.* The same thing is worn after childbirth for six months. Angoni women always wear them.

The Angoni, Chipeta wear their cloth tags-fashion, carrying a fold of cloth on the left arm. An Angoni chief wears three cloth, blue, white and coloured, the first outside, the last next to the skin.

The material used is now practically everywhere European-made calico, formerly bark cloth only was used by Nyanja, though weaving had been accomplished by Angoni, where skins were and are used as articles of clothing.

There is nothing to distinguish men of various grades, etc. Fashion at the present time is very capricious—some patterned cloth being much worn one month will have no sale a month later; this is true both of men and of women.

There is no class uniform, and no "costumes" are worn save in dancing (p.).

Men are now seen wearing a piece of calico twisted up on the head in turban form, a custom lately introduced from the coast—the only indigenous head-gear in the using skull-cap worn by Angoni widows.

Under the heading of dress must be included the head spoons worn by Tao and Angoni. Among the former the use of this garment is restricted to the women, who in the house sometimes wear nothing else; among the Angoni the children often have them and no other clothing.

Sandals are sometimes made of skin and fastened on the foot with a thong when crossing thorny country.

Among Angoni the sandals only used to be worn; this is a small hard-wood fruit which was hollowed out and worn just covering the glans penis.

Food, etc.

The staple food throughout the country is either maize or rice, the latter only at various spots on the lake shore where it can be grown. Two food meals per diem are taken, at 9 or 10 a.m. and again at 4 p.m.; each consists of calico porridge made from maize flour or rice flour or boiled rice with some calico (bilich) in which the milk is added. At odd times the native will eat anything that opportunity offers—a piece of manioc root, a boiled sweet potato, a roasted maize cob, etc.

The calico is made by *stirring flour (ufa) into boiling water till a stiff paste is formed*; this is kept cooking for five minutes and then scooped out with a wooden

* Diaper or nappy: a woman keeps five or six; they are never put away in baskets but always hung up; a woman changes every time she bathes, using two or three per diem; they may be given to a female child to wear, but cth then not worn again by a woman.

4: Stanford D-S (on. 1995)1910 FT7 Tue FT7
Maravi FR4

[illegible] spoon into a clean shallow basket or on to a plate. The relish or relish, consisting
[illegible] of vegetables such as beans or a kind of spinach, a little fish or chicken, is cooked
[illegible] in a separate pot, and usual there then about to eat relish. Washing their left
[illegible] hands in water, they take some of the porridge and making a sausage shape of it,
[illegible] dip it in the relish and then some it into their mouths.

[illegible] Salt was obtained either from natural deposits or from "salt earth" on a stream
[illegible] bank near Fort Johnston, or from the ashes of burnt longo reeds or sandalwood;
[illegible] by a method of granulation through porous pots.

[illegible] The native rather dislike between meals—water. After eating he may wash his
[illegible] mouth out and clean his teeth, using the frayed end of a piece of wood as a
[illegible] brush.

Alcohol.—With the exception of the people living on the lower river, who drink fermented palm juice, beer is the common alcoholic beverage. Beer is made from maize (chimanga) or millet (mapira); the malt of the latter is very largely used for beer making; it makes the best beer and is normally produced by August.

Gwaji is prepared by boiling flour with water; after an hour barm (chimbuki) is added fermentation sets in; and it may be drunk the next day; it is the sweet beer, with or without barm. On the second day it is again boiled and is allowed to cool; the third day more barm is added (chimbuki); the fourth day fresh gwaji is made, and the contents of the original pot, now called mpungu, is added to it, making two pots of beer. It may be drunk the same day while hot or allowed to cool and taken on the second day.

Food-stuffs.

1. Maize (chimanga), millet (mapira, mawere), rice (mpunga).
2. Cassava—sweet potato.
3. Beans and peas of many varieties.
4. Pumpkins, watermelons, melons (dzungu, mkaka, chikwanda).
5. Many kinds of leaves growing wild—also pumpkin leaves, of which a kind of spinach is made.
6. Bananas (yow-plant), sugar cane and canda are cooked.
7. White ants, locusts, honey.
8. Numbers of small animals are eaten by Chipeta, Angoni, etc. With the spread of Mohammedanism this is going out; rats, mice, hares, rock-rabbits, etc. Chipeta will eat dog, and I once saw one eat baboon. Frogs, shell-fish, snakes, crocodiles, crows, vultures, eagles, are never eaten.
9. Fish (nsomba), fresh or dried, in much eaten, thirteen varieties being enumerated.
10. Chickens, ducks, wild birds that they may snare.

* Spirits used to be made by distilling from beer and banana and palm-juice by means of a pot and a gun barrel.

4: Stanner D-5 (ca. 1909) 1910 FT7 Yao FT7
Morovi FR4

Gape, the residue after pounding maize, is eaten by the women. No oils are used in cooking, but of fat and suet any native is very fond. Meat may be dried and smoked if in large quantity: flesh, fish and fowl is commonly roasted on spits; small pieces of chicken may be made into a kind of stew with beans and eaten as the relish. When on a journey the fire is commonly made against a tree. The cooking vessels are cleaned before use, not after. The fried fish eaten is often partly decomposed, and meat which is very high, even with maggots, is cooked and eaten, maggots and all. [M Y 262] [252] [251] [199] [244]

Taboo.—Bushbuck is not eaten by many natives, as they say it feeds near graveyards. Fowls are not eaten by some, as this diet causes them to vomit; a snake-catcher never eats vegetables, and at the same time puts medicine on his hands. Many abstain from the flesh of certain animals as certain skin diseases are said to be caused thereby; all such diseases bear the name uulwawaga. [M Y 753]

A man who loses a relation by drowning takes an oath that he will never again eat fish, and never drink water from such lake, river, etc. Here the idea is of course simply to avoid eating part of the relation.

A Nyanja and Machinga will not eat the flesh of the hippopotamus, because on the body they say there are the marks of a string round the loins and of a mat on his back, adding that long ago he was a man. Animals of prey would never under any circumstances be eaten. Milk used never to be drunk by an adult, as it was said to cause a man to become as a child. A man would not dare to drink woman's milk as it was said he would surely die of dysentery. [M 825] [M 272]

Tobacco, etc.—The smoking of tobacco was a custom introduced from the coast. Chewing was general among Machinga and Yao men and women, while the Angoni and Mchanja snuffed. With the tobacco a little lime, made by burning shells, was taken in the mouth. Giddiness and sleepy sensations were experienced after chewing. The Nyasa and Awisa smoke a hubble-bubble, the water vessel being a large sausage-shaped gourd with a reed stem supporting a large bowl of ukidowe wood, sometimes very nicely carved (Plate XXVII, Figs. 5 and 7). The Anyanja smoke a pipe with the bowl made of clay and the stem of bamboo (Plate XXVII, Fig. 6); these are made by the women. Tobacco is grown in nearly every village, a large-leaved rather coarse variety; it is sun-dried and rolled up into hollow rings 6 inches in diameter and 3 inches broad. For snuff (*Fodia* [illegible]) the sun-dried tobacco is further dried over a fire on a pan, when cold it is ground on a stone with a smaller stone by the women, and with it is mixed some ashes of the upasa fig-tree. [M Y 276] [77]

At Hunyiya I obtained a water-pipe made of bamboo stem; this was the water reservoir; a stem of reed supports a little clay bowl. The mouth is placed over the upper end of the bamboo. Bhang (*cannabis indica*) is smoked in a pipe of this kind.

Agriculture.

The people live by cultivating the soil. Both sexes help in hoeing and planting, the collecting of the crops being mostly done by women. The hoe is the [M Y 241]

4: Stannus D-5 (ca. 1909)1910 FT7 Yao FT7
Marayi FR4
Ngoni FR5

M Y 241 only implements used. Sowing is done after the first rains, about November; the harvest takes place in May to July. Gardens are at varying distances from the villages, depending partly on the soil becoming exhausted M Y [923] after years of cultivation. Boundaries are marked by leaving a line of uncultivated ground, sowing a line of a different crop, M [922] tying knots in the young crops at intervals, ditches, etc. In starting a new garden, woodland is often taken; the trees

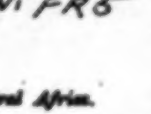

FIG. 6.

are cut down, leaving stumps 3 feet high; the undergrowth is cleared away and burnt, the ashes distributed over the land, which is then hoed, really very superficially; the earth is then made up into little heaps with a central hole in each, after the first rains four or five grains of the cereal (maize, millet) are dropped in each and covered with earth; as the young shoots grow the hole is more and more filled in.

With the cereal is planted the seed of peas, beans, pumpkins, the former on coming up then grow up the maize stalks. The seed is last year's product and not specially selected.

M Y [348] Depredations among crops made by elephant, hippopotamus, large antelope (eland and kudu), pigs and baboons, vary in extent in different districts. Little M [917] grass huts are built, raised above the ground like a pile-dwelling, in which watchers are stationed. Fences, sometimes extending for miles, are built. The gardens of the chief are hoed by his slaves or the people of the village. Maize is collected M Y [251] in the cob, and after the outer coverings have been removed is stored; so is the sholoo, millet in the hoed; beans and peas are stored in baskets. Medicine is put on the ground to ensure a good crop, and a piece of stick is sometimes hung up for good luck.

CATTLE, ETC.

M 231 The keeping of cattle is practically restricted to certain tribes living in districts free from tsetse-fly (Angoni, Wankonde); among these people wealth is M [922] reckoned by cattle. The milk is little used; the flesh is eaten only when an animal dies. Marks of ownership are made by cutting the ears (Fig. 6). Cattle are kept in open kraals by Angoni, in a compartment of their houses by Wankonde; they are tended by the small boys as a rule. Goats and sheep are kept all over the country. Castration of cattle is a recognized practice (buffalo).

M 287 Angoni make their shields from cattle skins; their spear handles are covered with goat hair (beard); hair anklets and armlets in dancing costume are made from goat hair. Skins are used as drum to a small extent.

HUNTING.

M 224 A man informs to the community around that he is making a hunt by sketching a boy of about ten years in leaves, who precedes him and the men from his own village through adjacent villages; at each village the lad has to lie down and

4: Stannus D-5 (ca. 1909) 1910 FT7 Yao FT7
Marovi FR4

in beaten with branches, or leaves are thrown at him. Men join from all the villages. Next day they set out in line towards the nets they have set, the inaugurator of the hunt in the middle. Game is driven into the nets by the advancing line of men and their dogs and is speared. On the other side of the nets are men set as watchers, who would let down the net at the approach of any big antelope, who would otherwise break it. All the game killed is taken back to the boy clad in the leaves, who watches it in the background. At the end of the hunt (*nsimbo*) the inaugurator of the hunt chooses his portion after it has all been divided up, and gets a hind leg of every beast killed by the others. The net used is 200 to 400 yards long. Hunting is done in the early morning during the month of July. M 224

The Mafanja and Chipeta did not hunt elephant, but dug game pits. They used bows and arrows. The Yao, Machinga and Amangoche, possessing guns in the old days, used to make big hunting parties, staying away two and three months and killing elephant and other game. The hunter inaugurating the hunt had the first shot at an elephant, and all ivory was his till sold at the coast, when the followers got their proportion of calico brought back. The skins and horns were divided. The flesh was cut into strips and dried over wood fires. The chief has choice of the biggest tusk on the return of the party to the village. Yao elephant were shot in the vicinity of the village, the chief claimed the ground tusk, *i.e.*, the tusk on the side on which the elephant dropped. Before starting on such a hunt the *sfo* would be cast to see that they would have good luck. All those taking part would have "medicine" rubbed into little incisions cut on arms, shoulders, and sometimes on body. *Mankwale* (medicine) was also tied on the guns; it consisted sometimes of a number of pieces of wood threaded on a string, or I have seen another made of sun-dried animals' blood and charcoal. Should the wife of anyone of the expedition commit adultery her husband might get killed. A man going to hunt will never have intercourse with his wife the night before, otherwise he would be unsuccessful. M Y 224 [411]

Bows and arrows are used, the bows being sometimes about 5 to 6 feet long. The "Mediterranean release" is employed, and the arrow rests against the left side of the bow. Three kinds of arrows are carried in the same quiver (*pofo*): spentlow, a blunt arrow for stunning birds; *nakuta*, with a large iron blade; and *upofao*, with a small pointed head. M Y 411

The Mafanja use a long-handled, short-bladed spear, usually thrown at a short distance (a few yards), when it is grasped in the hand about the middle. From a further distance (thirty yards) it may be pitched by holding at the extreme end. Traps of various kinds, made of a bent sapling and noose, are commonly used. Dogs are used in hunting to drive, to run down small game and to keep the bigger animals at bay. The only arrow poison used is *chonde*, made from euphorbia juice and other things; it is used in warfare and elephant hunting. The flesh of animals killed with *chonde* is not considered safe to eat. Children from twelve years of age accompany their fathers hunting. M 411 M 224 M [278] [357]

4: Stannus D-5 (ca. 1909)1910 FT7 Yao
Maravi FR4

FISHING.

226 *Khoko.*—A drag net 50 yards long, in the river 8 feet deep, in the lake 4 feet deep.

227 *Kombe.*—A net set across a shallow river, 20 to 50 yards long, 6 feet wide.

Chilupe.—A funnel-shaped net 5 feet in diameter at open end; it is held by two men, who meet a shoal of the small *usipa* (like whitebait) as they come in any given direction. Floats for the nets are made of *pumbwa* tree pith or *mpupu*; stones are used as sinkers.

Mono.—A "lobster-pot" fish trap of two sizes used in rivers and on the lake shore; the bait consisted of *pupu* (maize-chaff).

Fish-spearing.—Is practised by torchlight, as the fish try to go up small streams when the rain flood them near the rocks; fish are also sometimes speared in Lake Nyasa. The fish spear is called *chombe*, and has a single point.

Hooks.—Hooks are baited with fish or *usinsa*; they are tied to a large reed and left all night.

Poison.—The roots and leaves of a shrub called *ombwe*, pounded in a mortar [278] in water and thrown into a river, cause the fish to come up to the surface stunned; *nkhadzi* (euphorbia) is also used. Children of nine and ten years go fishing. Women do not fish.

FIRE.

The simple fire drill is the only means of making fire; wood is the only fuel 372 used (and charcoal for smelting). There are no sacred or religious fires, and no fire god. Fire is carried from hut to hut in the form of a smouldering log, and blown into flame with the breath. After the death of anyone in the village all fires are extinguished, fresh fire is made outside the dead man's house to cook for all, and [Plate] from this fire is taken to every hut.

HABITATIONS.

342 Houses are built of supporting poles, the roof frame-work of bamboo, the roof of thatched grass, and the sides of the house of reeds or *chewanga* stalks; the

FIG. 5.

4: Stannus D-5 (ca. 1909) 1910 FT7 Yao FT7
Marav: FR4
Ngoni: FR5

whole frame-work is secured by bark lashings, the walls, inside and out, and the floor are plastered with mud from an ant-hill, mixed with a little cow dung, if possible. In some houses the walls do not reach up to the roof, leaving a space through which smoke may escape and air enter. M 342

At Chipoli and at Mangoche houses were built on piles and in trees respectively to avoid lions. A house is occupied by a man and his wife and any young children; no older relations are allowed to sleep there. The children, when aged about five years, go to live with the maternal grandmother till their first *ingapo*; there may be from a dozen or more children living with the grandmother, who feeds them and sometimes also provides clothing. Such children are said not to have coitus with each other as they are relations. After *ingapo*, if not married, the girls go to live again at their grandmother's house, the boys to the *upondo ya bonde*, four to ten or more using such a house as a dormitory. They get their food from the grandmother, visit her and may use her utensils, sit on her bed, but never so with their mother. M 342 M 342 M 342 [336]

In houses where there are partitions or verandah rooms these smaller rooms are often used as bed chambers, and always as store rooms for baskets, pots, hoes, etc. The native usually sleeps on a mat laid on the ground; in some cases the ground is raised into a kind of dais (Angoni and at Mangoche). Among Yao and many Matonja, wooden beds are now used, introduced from the coast. The Angoni make wooden stools from conveniently shaped branches (Fig. 10). The native has so few belongings that he makes nothing in the way of shelves, nor hooks for hangings. Clothes are stored in baskets. The hut is kept swept and all refuse deposited on a dust heap near the hut. M 342 M 342 M 342 [352] [352] [352] M [356]

Fig. 10.

The doorway is closed by a door made of reeds and grass bound together. This is placed against the inside of the doorway, and a pole dropped in between two sets of supports. In the day time the door often rests against a fifth support. There are no windows and the smoke finds its way out through the roof thatch. A guest house (*ivala*) with fence (*chimbundi*) round it used to be found in villages, but does not exist any longer. M 342 M [349]

There are no ceremonies connected with the building of a house or the preparation of the materials for its construction. There are no household gods. The fire must be in the middle of the hut, and on one side is the bed. Any people visiting the hut must remain on the opposite side of the fire, except "friends," and *on no account must children go round to the other side, because under the bed* the women's diapers are laid to dry. The fire must not be touched by the male children, but is tended by the girls. The fire is generally kept burning continuously, but it is of no consequence if it goes out—a burning brand is brought from a neighbouring hut. At the death of a headman or other person in the village all fires are extinguished, fresh fire is then made in the dead man's house and from this passed from hut to hut. There is only one method of making fire, that is, the fire stick. M 354 [374] M [368] [371]

4: Stanaus D-5 (ca. 1909)1910 FT7 Yao
Marav: FR4
Ngoni FR5

M 251 343 Near the house, which is often surrounded by a fence, either within it or outside, is the grain store or shelter, a cylindrical structure made like a hurdle, set on a platform below, supported on posts 2 feet above the ground. Sometimes the whole, sometimes only the lower part, is mudded over. It is covered by a thatched roof, which can be removed at will. At one point at the base there is commonly a hole to allow of taking out the *chimanga* (maize) cobs as they are required. These shelter vary in size, average being 6 feet about the platform and diameter 4 feet. There is often also a pigeon house, made of the cylinder of bark removed from a tree; this is put in a tree or supported on poles, and the ends partly closed with crossed sticks, near it will be a broken pot supported on a forked stick, kept filled with water for the birds to drink. Any sheep, goats or cattle are kept in the *khola* or kraal made of trees, and often pretty strong, and covered with thorny branches to withstand the visits of leopards, etc.

M 231 343

M 352 354 The household furniture consists of little. Near the middle of the hut is the fire, with some big stones on which to set cooking pots; sleeping mats either set out or rolled up; two or three cooking pots and baskets of various sizes; a water pot and gourd bails.

POTTERY.

M 323 415 There is no tradition whence pottery making was introduced. No potter's wheel or mould is used, no tools are used save a knife to score patterns on the pots. The material employed is a kind of clay, to which is added some cattle dung (I presume to get the small pieces of grass). A pot is made at one sitting, building it up from the open mouth. It is done by women, who are potters by trade. Before baking, the pot is dried in the sun, then rubbed over with green leaves, which prevents cracking. Baking is performed by making a fire below and all round the pot as it stands upon and downwards. Among *Angoni* and *Atonga* some pots are "painted" with plumbago (*chowe*), the *nkale* with *tembwe*, a red earth, ochre of sorts, before burning. The decoration consists only in a few scored lines near the rank. No pottery figures are made, and no special funeral pots; the deceased's own pots are broken and placed over his grave.

N [323]

FIG. 11.

The following are the different varieties of pottery vessels (Fig. 11):—

Mbaula, a spherical pot for water (*a*).

Mbari, a larger pot of similar pattern for beer-making (*c*).

4: Stannus D-5 (ca. 1909) 1910 FT7 Yao
Marovi FR4
Ngoni FR5

Mpika, a beaker-shaped vessel in which the relish is cooked (*d*). M 323 415

Mhati, a small *Mpika*, always kept by the side of the fire with warm water in it. With this the woman washes her husband after intercourse; she may use the same to wash herself, but more usually goes to the ordinary washing-place, a flowing stream.

Mbali, a dish (*e*).

Of other vessels may be mentioned a jug used by the Wahenga, the gourd ladle of universal use (*b*), and the large wooden mortar, 2 feet 6 inches high, with a pestle 3–4 inches in diameter, employed by all the tribes for pounding grain. M 415

Weaving is practised by the Angoni only. N [206]

Basketwork.—In former days mats were made of split reeds and baskets of bamboo; now the making of mats from palm-leaves has been learnt from coastal natives, and the Chipeta varieties of basket have been copied by other tribes. The following are the principal varieties of basket in use (Fig. 12):— M 285

Nanpuru, a small tray, used for flour, beans, etc. (*a*).

Lidwru, a large tray, used as the *Nanpuru*.

Nikanga, a circular pattern with a square base, for chemanga cobs (*b*).

Tumanda, a circular pattern with a wooden rim and cover, for clothes (*c*).

Chimumbi, a small watertight basket.

Sindi, a large basket, also watertight, for beer.

FIG. 13.

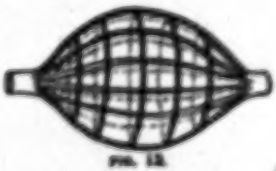

FIG. 14.

There is little ornamentation of the baskets except of the *tumanda*, the bent-wood edges of which have designs cut and burnt on them. Painted grass bracelets are made, rough ropes for carrying chickens, etc., are made from split bamboo (Fig. 13). A form of basketwork is used to make the window or grain store. Fish traps of very complicated design are also constructed. Gourds of various kinds and sizes take partly the place of baskets.

String.—The bark of the *bomi* tree is cut off and dried in the sun; it is then rolled between the hand and the thigh into string with no other treatment. The bark of the *Siapo* tree is used to make string or *chingwe*; this tree is planted for that purpose. Rope is also made from the baobab tree. Painted palm leaves, *sprenkels*, are used for many purposes, and are stretched across the framework of the bed to support the mat. M 283

4: Stanton D-5 (ca. 1909)1910 FT7 Yao FT7
Maravi FR4
Ngoni FR5

M 283 [534] String is used to make their fishing nets, necklaces, and other beadwork. For bow strings tendo achillas is used, also strips of skin, *strings*. On their musical instruments ordinary string or grass is used to form the strings.

M 412 Needles made of sharpened bamboo were formerly used, the blunt end being chewed into a pulp and then incorporated with chewed end of the string.

M 285 Netting is done in the ordinary way with a simple shuttle.

Leather.

M Y 281 The skins of their domestic animals—cattle, sheep, goats—and of antelopes and leopards are prized. No fish skins are used. Skins are removed from the animals by a median ventral incision and other incisions along the inner sides of the legs. The Yao leaves the hair on the skin, some Chipeta remove it. The only treatment a skin gets is scraping and drying in the sun, then rubbing with stones and beating till worked soft. This is done by the men. I have only once seen an ornamented skin, that of a sitatunga from Lake Bangweolo, North-east Rhodesia. Skins are but comparatively little used, occasionally to sit upon. In German M [622] territory every chief sits on a leopard skin. They are used of course to cover drums, make bags for carrying a supply of grain, and to make bellows for the metalworker. The skins of small animals are used as purses and tobacco pouches. N [281] Among the Angoni and Chipeta they are used as loin-cloths, also to support the baby on its mother's back, and of course to make shields.

Dyeing.

M 386 There is practically none. The root of a certain tree is cooked with grasses to give them a black colour, to be used in making mats with patterns; this process has been learned, I think, from the coast.

At Liboma, the root of the red *ntini* tree is boiled in water and the decoction used for staining, and, I think, strengthening their fishing nets. Dyes are not used for any part of the body.

Painting.

M 392 Recently decoration of the outsides of their houses has come into fashion, a 532 red earth and lime being used to depict men, cattle, antelope, steamers and bicycles. Often merely geometrical designs are made, I think by Mohammedan coast people.

Stone-work.

M 329 No stone implements are used, except stones for grinding maize, some small pans and snuff. There is a lump of stone at Fort Anderson on which holes have been made for playing the *ohwa* game.

4: Stannus D-5 (ca. 1909) 1910 FT7 Yao FT7
Marbi; FR4

METALLURGY.

Among the natives in Nyasaland, with the exception of copper in the north (Wabungu) and brass in parts near the Zambesi, iron was the only metal worked. M Y 325

Other metals now used and obtained from traders are, copper, brass, lead, tin, etc. Iron = *chitsulo*; brass = *mpuli*; copper = *mkuo*; of iron, hoes, axes, knives, spears were made.

At the present time copper- and brass-bound spears are still found at the north end of the lake; copper bracelets and body rings also. The brass wire bracelets elsewhere are made from imported metal. Iron-stone ore in the old days was smelted in a furnace of stones made in the form of a long drain 3 feet long and 1 foot high; in this a mixture of lumps of ore and wood charcoal was put, and single bellows of goats' skins were used to make the draught, which is aided by building a chimney at one end; at the other end a hole is made in the ground to receive the molten metal. A quantity of this is then again melted in a hole in the ground with a charcoal fire about it, and then the metal run into a trench to form a thin bar which is then hammered and worked into a spear, etc. At the present time little smelting of ore is done. There are regular metalworkers, who make knives, etc., using a little hearth with goat-skin bellows, a crucible for copper and brass, etc., tongs, pliers, hammer. An iron plate with an aperture for drawing wire and files are also employed. M Y 326 M Y [501]

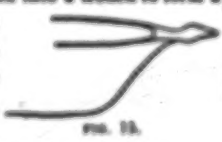

FIG. 11.

Bellows.—A goat's skin with a large opening sewn to two sticks; the leg is then held by these sticks and closed and pressed, the air being driven out through an iron tube inserted through one of the legs of the skin.

BOATS.

The only form of boat in use is the dug-out canoe without outriggers. No skins are used. These are punted along by bamboo poles in the rivers. On the lake paddles are used, never oars. There are no sailing craft. The *mapesa* is the tree used for making canoes, sometimes also the *mbawa*. They are cut out with a small adze, *mwpo*. The *chao* bush is used for caulking, *twenty or thirty of* the stalks being crammed into the hole. *Mpiso*, a ground-creeper, is also used after being pounded. For bailing anything is used. At Likoma a vessel like a very small canoe called *upo* is employed. A kind of raft made from pith-wood and called *mapumbwa* is used to fish from. Occasionally these get washed out into the lake and the fisher has been drowned. M Y 501 M 396 501

The canoes vary in size from 10 to 50 feet and more, the smaller being used as ferry-boats across a stream; the largest were made to carry slaves across the Lake Nyasa in the old days. In punting a canoe, one or two men work, keeping time. In paddling, any number may work, the largest canoes have twenty men working on either side. Down river near Zambesi the paddlers kneel; on the Lake they stand. M Y 501

4: Stannus D-5 (ca. 1909)1910 FT7 Yao FT7
Moravi FR4

M Y 501 When a number are working they take time from the front man, the rear man steering with his ordinary paddle. The passengers sit in the middle, a chief towards the stern. They never lose sight of land even in crossing the widest part of the lake. Stones are now used occasionally as anchors up the lake; grass houses are made to shelter canoes. The smaller canoes are 2 feet to 2½ feet high, the very large ones used to be 4 and 5 feet high; except on the lower river, where canoes have ends similarly shaped, they are made with a bow more pointed than the stern and having a beak (Fig. 15). There is no ornamentation and no figure heads.

M Y [422] In every lake-shore or river-side village or collection of huts will be found one or more canoes; these belong to some one man, others using them paying a fee. At the launching of a new canoe, beer is made and the women dance, and medicine is made for its safe journey.

SWIMMING.

M 481 Not even all lake-shore natives swim, though most do. The art is learnt in childhood and not taught. They are not very fast swimmers, and I do not think could swim very far. They sometimes dive head first and practise staying under water. They swim rather like a dog, both arms coming a little out of water, but not a trudgeon stroke; arms are kept straight. They sometimes swim on the side, but never use the ordinary breast stroke.

GAMES.

M Y 524 Several games are played resembling the game of *ohwa* introduced from Zanzibar (Masonda); *ohwa* is played on a board in which rows of holes have been cut; beans are used as counters.

Mikombwa.—A game found among Anyanja and Machinga; it may be played on a *ohwa* board, but is often played in holes made in the ground with stones. The Angoni game *chipolopolo* is played in the same way. At Fort Anderson is a heap of stones in which hollows have been made similar to those made in the ground. It is the only piece of stone-work I know in the country. Children and women play knucklebones (*mikoko*).

A man tries in one breath to keep saying *ndiri-diri-diri* . . . . while another makes a pile of stones from another pile of ten, taking one at a time, saying, "To take and put it there makes one," etc. Men play at guessing in which hand an object is hidden, or one out of two men sitting in a house has to guess with whom a certain object is. No forfeits.

Fundwale (=the spider) is cat's cradle.

Fisi (hide and seek), one hiding, five or six seeking.

M Y [422] There are no dice games. Cards were introduced from the coast before the advent of Europeans into the country; the games are various and difficult to follow.

M Y 526 A slip-shod kind of wrestling is practised by Anyanja people; the Machinga

G. Stannus D-5 (ca. 1909) 1910 FT7 Yao FT7
Marawi FR4

wrestle thus: each man passes his right arm round his opponent's waist and grips his opponent's left wrist. When one has thrown the other, the victor spits on his hand, dips it in the dust and then smears his victim on the forehead. M Y 526

The boys practise long jumping. Small boys make miniature bows and arrows, spears, etc., to play with; in their ways and frolics small children resemble European children exactly. Little girls play at dolls—they cut cucumbers into shape and dress them in calico cloth, carrying them on their backs and making pretence to suckle them. M Y 527 524

The first words spoken by an infant are *ma* (*mami*=mother) and *ta* (*atata*=father); at two years names and *tata* are words used; a word soon learnt is *Ndawa* "No! I don't want to." M Y 523 528

The only acting I ever heard of occurred when my own Machila men once acted a village scene, in which a woman (a man dressed up) while pounding corn was seized and raped by another man. At the right moment her husband and others rushed in and collared the man, who was condemned to have his head cut off; the execution followed. M Y 536

Dances.

The following is a list of dances; opposite each is the name of the tribe who dance it:— M Y 535

1. *Chindimba*, Yao.	13. *Lalam*, Yao.
2. *Libwata*, Yao.	14. *Njoda*, Yao.
3. *Dhala*, Yao.	15. *Sukwa*, Yao.
4. *Mdawari*, Mabanja.	16. *Sanjo*, Yao.
5. *Kwaja*, Mabanja.	17. *Nkonda*, Yao.
6. *Pindamdera*, Mabanja.	18. *Chikwada*, Yao.
7. *Mwawa*, Mabanja.	19. *Mawaw*, Yao.
8. *Kwangwa*, Mabanja.	20. *Mangwaji*.
9. *Mbada*, Mabanja.	21. *Sanji*.
10. *Chikai*.	22. *Chimwiriwiri*.
11. *Pingwa*, Mabanja.	23. *Mawa*, Mabanja and Yao.
12. *Ntala*, Mabanja.	24. *Mangwakala*, Yao.

1. *Chindimba*—Danced at the *mdala* (mourning ceremony) generally inside the house unless a very large number of people are present. Y 535

All sit round and clap while one after the other men and women get up and dance in a rocking motion from one foot to the other, a small drum held against the chest; in former times a large one lying on the ground used also to be used—now two or three, standing on legs, are employed. When danced in the dead man's house, the body lies at one end of the room with the *Ankhalala* sitting by it. On one side are the mourners, and on the other the dancers, the dance being sometimes started immediately after death, sometimes the following morning and continued for three days.

This dance is also performed at almost any beer drinking.

4: Stannus D-5 (ca. 1909)1910 FT7 Yao FT7 Mbravi FR 4

Y 535

2. *Likwata.*—A woman's dance (Scott's Dictionary states for men and women). The women dance in a ring, clapping their hands; no drums are played; each woman in turn advances into the middle, where there are usually four at a time. Here they turn round several times from left to right. When she has finished, she rejoins the ring passing in and out the others in the middle, a fresh woman taking 4's place and becoming No. 1 (Fig. 16). It is danced at any time after the burial ceremony is completed.

1304

FIG. 16.

3. *Utala.*—A woman's dance of recent introduction; danced any time. A carpenter from Blantyre staying in Majowa's village January, 1907 (Lake Nyasa), was found to be playing *chindindo* in a manner different from the usual fashion; his own variation he called *utala*. About the same time a new dance had been invented by the women, and for want of a name they called it *utala*, though danced to the same music as *likwata*, but with *chindindo* drums. The dance resembles *likwata* somewhat, but all movements are hopping, preceded by a few steps called *chendamalai*.

M 535

4. *Mitowi.*—Danced by men only to the beating of four drums including *chinbanga* and *mbulula*; one man dances at a time, shaking the loins while men and women sit on opposite sides in a row.

It is danced before and after burial sometimes, and at other times.

Y 535

Mang'ombola.—An old Yao dance seen at Fort Johnston, 25.8.07. Four or five men assisted in kilts made of dried palm-leaves with about twenty tassels on each leg. The four men do a continual kind of shuffling in line, the fifth, the *mpinki*, from time to time telling the drummers to play quickly, does a very fast *pas seul* with jumpings and kickings, and then assumes some idiotic pose.

M 535

5. *Kwajo.*—A woman's dance; the men look on.

6. *Tinkondwa.*—Circumcision dance.

7. *Nkwaro.*—Danced by men and women, sometimes in the funeral procession behind the mourners; big drums are used.

8. *Kwangwa.*—A small basket with stones and pumpkin seeds inside used to mark time with.

9. *Mtoko.*—Drum as in *mangombola*, may be danced in the funeral procession at the head of the procession. *Nkwaro* following the mourners.

10. *Chilwi.*—Old men's dance started immediately after the death of anyone, and continued for two or three days while the body lies in the house.

11. *Chiopwe, Ntopwe.* ? *Tiopwe.*—" A big dance " held after the death of some person. Only the initiated are allowed to be present, and " women who are foolish and would know nothing." Children are carefully excluded, and intruders guarded against by posting men in the neighbourhood, anyone not being able to give the password was liable to be knocked on the head. Those taking part were said to constitute a society with a secret language, etc., and were only admitted after giving proof of bravery, endurance, etc.

The dance took place always on a dark moonless night usually quite late

4: Stanner D-5 (ca. 1909)1910 FT7 Tao
Marau: FR4

Journal of the Royal Anthropological Institute, Vol. XL, 1910, Plate XXVI.

789
778
534
4/12

HOOK-THROWS OF MASHONA (CENTRAL AFRICA).

[p. 334(N)]

4: Stanmus D-5 (ca. 1909)1910 ?T7 Tao ?T7
Marsh 984

Journal of the Royal Anthropological Institute, Vol. 51, 1921, Plate XXVII.

MY
ART
371
S34
2%
S31

[p. 334(8)]

G:Diamond D-5 (ca. 1909) 1910 FT7 Tan FT7
Marcel P.R.4

and the feature of it was the introduction of life-size representations of animals made of bamboo and grass with men inside.

I saw new dances at a nawaali ceremony among the *Ankoe* (p.).

12. *Ifulu.*—Women only present; danced on the occasion of a girl's first menstruation.

13. *Lilimo.*—Women only, on the occasion of the quickening with first child.

14. *Ifyulu.*—Men and women, a quick shuffling step while standing in a circle.

15. *Sukuma.*—The body shaking (shoulders) dance of boys, they walk round in a ring, some fifty of them, the drums in the middle; when the boys drum beside into a quicker time they all start shaking shoulders and bodies with intervals for two or three steps.

16. *Nangle.*—Danced in a circle, men and women alternately.

17. *Ifunda.*—A big dance with sexyl rattles.

18. *Chilinda.*—Dancing boys dance.

19. *Ifwenze.*—(1907) men and women; each carries a large reed filled with pebbles—no drums.

20. *Mangenyi.*—A sweet dance; palm leaf bags filled with pebbles are tied on the legs.

21. *Bwajo.*—A pas-de-deux, each man with a rattle and hand-drum; for a few moments they wander round each other picking up the time and tune, and then jump into a very fast step dancing and jumping into the air shaking the rattles.

22. *Chimwalwalwi.*—A pas-seul by a man carrying a rod and bow with rattles of small sticks.

23. *Mawere.*—Dances no longer. At Mpemba's village a big crowd used to dance with skins round the hips and wooden rattles; in their hands they carried five snakes which had been rendered harmless by putting rattlesnake over their holes before digging them out. Four drums as in *chimlinda* were used. The women all fled away.

Description of Plates.

Plate XXVI.

1. Iron tube with human hair.
2. Lead pendant of "medicine."
3. Iron bells.
4. Reed rattle.
5. Medical mytical skin.
6. Portable shrine containing "medicine."
7. Portable shrine.
8. Horn containing "medicine."
9. Reed rattle.
10-13. Contents of the bag of an *Ifwenze*.

Plate XXVII.

1. Gourd round, Tan.
2. Drinking gourd.
3. Mahenje.
4. Gourd rattle, Tan.
5. Gourd for making beer.
6. Amulet.
7. *Ifulu.*

S: Mitchell E-5 (1946-1948) 1949 FT? Yao FT?

AFRICA

JOURNAL OF THE
INTERNATIONAL AFRICAN INSTITUTE

JOURNAL DE
L'INSTITUT INTERNATIONAL AFRICAIN

ZEITSCHRIFT DES
INTERNATIONALEN AFRIKANISCHEN INSTITUTS

COO

Editor
DARYLL FORDE

Assistant Editor
R. E. WYATT

VOLUME XIX
1949

[Title Page]

LONDON
OXFORD UNIVERSITY PRESS
GEOFFREY CUMBERLEGE

S: Mitchell E-5 (1946-1948) 1949 FT7 Yao FT7

authorities to-day: those of the British administration. Yet the headman is a key official, if usually unpaid, in their administration. For example, he has to report suspicious deaths and illnesses and strangers, and he has to see that his villagers keep the village clean, have paths, use latrines, follow agricultural and veterinary regulations, pay tax, &c. He is no more ready than they are to accept these as good, but he takes to enforce the rules for he is liable to be punished if he does not, by fining, imprisonment, and ultimately deposition. As he applies these unwelcome and unaccepted rules, his position becomes subject to still greater strain.

II. THE YAO OF SOUTHERN NYASALAND

J. C. MITCHELL

THE Yao people were notorious at the end of last century because of their reputation as slavers. *Livingstone* had noted their close association with the Arabs in this trade and much of the effort of the early administrators of Nyasaland was directed to suppressing the slaving activities of the Yao. While the slave trade has been fairly well studied, the associated but different phenomenon of domestic slavery has not been nearly so thoroughly investigated. It seems that domestic slavery was an important part of the Yao social structure in those days, before the coming of the white man abolished at one stroke this and many other social institutions. But, though the institution of domestic slavery ceased to exist, the system of values upon which it was built still survives and still affects the social structure of the modern Yao. We might summarize this system of values by saying that the status of a man depends on the number of people over whom he exercises certain rights and for whom, in turn, he is responsible. In the past, a man could increase his status in the community by acquiring slaves. This he did by buying them with cotton obtained through the slave trade, or with ivory, beeswax, tobacco, and other natural products; by taking them in compensation for the death of a relative; or simply by kidnapping them. Slaves were often taken as spouses by the members of the group over which the man exercised his command, or by the man himself as wives, and thus the group was further enlarged by natural increase. Though these slaves and slave-children had fairly well-defined rights, they were not free to leave the command of their owner, and the group was from that point of view a stable one. The leader's command over his matrilineal and other relatives, however, was not so absolute and it is with this aspect of the social structure that I am here concerned. This system of values still persists and forms the basis for evaluating the status of men in the Yao community. The high status of a village headman is usually expressed in such terms as: "He is a big man—he has many people", or "he has many huts". The village headman himself and the men under him are motivated by the same system of values so that in any village at any time there is a balance between the desire of certain members of that village to break away and establish units with their own dependants, and the desire of the headman to retain these people under his charge.

The tensions that exist in this situation are well recognized by the Yao and they always express them explicitly during the ceremonial succession to village headman-

Sr Mitchell E-5 (1946-1948) 1949 FT7 Tao FT7

ship. The difficulties of his position are brought home to the neophyte village headman in speeches made by old and experienced men. On one such occasion I heard a man say, "Some men who marry into a village are bad and can split a village like this one by telling lies to the headman, saying that his sisters are talking behind his back and are insulting him. When a headman hears all this he might break his village by ill-treating his relatives, thus causing himself to be left all alone." In this way the headman's responsibility for maintaining harmonious relations between the members of the village and himself is emphasized. His failure to do so results in what they call a break in the village—the departure of some of the members to live elsewhere—which is a severe blow to the status of the headman. In fact, he is dependent on his dependants for status, and the Yao are quick to point this out to neophyte headmen, saying, "A tree cannot grow without branches."

We can better understand the situation if we consider the social structure of the Yao village a little more closely. The Yao are a matrilineal people and are dominantly matrilocal. They live in small groups of huts scattered fairly evenly over the country and from a few hundred yards to possibly a mile or so apart. Such clusters may contain as few as five or as many as sixty or more huts, occupied by between 20 and 100 people.

These people are almost always bisexual, and in the smaller villages they are usually all either matrilineal descendants of a common ancestress or their spouses. In the larger groups there is a more complex situation which I shall analyze below. In the simpler groups there may be no male matrilineal descendant in the village and the leadership of the group is taken over by a senior female descendant of the founder of the village. Usually, however, if the group is large, one of the male matrilineal descendants lives permanently in the village and assumes leadership.

The relationship between a male matrilineal descendant and the female matrilineal descendants who are in his charge is signified by the word "ubumbe". The word particularly refers to the relationship between a man and his sisters and I have therefore translated it as "matrilineal group". It includes a man's full sisters, matrilineal female collaterals (whom he calls sisters), their female children, and the female children of these female children, and so on. It is usually used in the sense of "somebody's matrilineal group". A man belonging to the descent group of the matrilineal group may refer to these women as "our matrilineal group". The man who is in charge of the matrilineal group is referred to as the ayano ubumbe. This could be translated as "owner of the matrilineal group" but because of the property associations with the word "owner" in our language, I have instead translated this as "warden of the matrilineal group" which expresses more accurately the relationship between a man and his female relatives. Even in those groups where there is a female in charge of the village and no male matrilineal descendant is resident in the group, there is usually some one man, possibly married in some other village, who is warden of the matrilineal group. The warden of a matrilineal group has certain particular duties to perform on behalf of his charges. First, he is concerned with the good relations between members of the matrilineal group and with other such groups. He has to settle some of the domestic quarrels that take place between members of the matrilineal groups. Second, and this is considered to be a more important function, he is the person who is the

marriage money for the marriages of the members of the group. Briefly this means that he must be approached before a marriage can be legally contracted by any member of his charge, he or his representative is present at the ceremony which formally sanctions the marriage, and he is responsible for the behaviour of his female relatives in their marriage. Third, he is immediately concerned with the physical welfare and health of his matrilineal group. He must track down the sorcerers causing their illnesses and supply the medicine to heal them. He has to arrange for the final purification of sorcerers after the death of one of the matrilineal group's members. Fourth, he must be present in the court-house if one of his charges is involved in a case and he is usually looked to for the money for the fine. I have known a case not to begin because the headman of the matrilineal group was not present. Frequently if the husbands of the female members of his charge default, he has to provide the hut-tax money.

Usually the headman of the matrilineal group is the eldest brother of a group of adult full sisters. The younger brothers of the group of sisters, while concerned with their welfare, do not stand in this particular responsible position. They refer to the matrilineal group as " our matrilineal group ". The elder brother refers to the matrilineal group, he is heard, as " my matrilineal group ", and this sets him over and against his younger brothers. The position that the headman holds, however, is not rigidly fixed, for a younger brother may assume control of the matrilineal group if he some reason he is dissatisfied with the way in which affairs are being conducted, and is able to assert himself.

If we recall that the status of a man in a Yao community is determined by the number of dependants that he can command, it is easy to see that relationships between an elder brother and his younger brothers are distinctive. The elder brother is responsible for the actions of his younger brothers in much the same way as he is for one of his matrilineal group, and the younger brothers have a great emotional attachment to their elder brothers. Yet at the same time the elder brother stands in the way of the younger brother in his striving for status, in that while the elder brother is member of the matrilineal group the younger brother cannot be, and therefore cannot have dependants and status. It is not surprising to find that accusations of sorcery are frequently made between brothers and the result often is that the younger brother takes the matrilineal group away from his senior brother to some other place and sets up a new village with it. Therefore, one possible source of instability in a Yao village lies in the opposition of the kinship system to a system of values which emphasis status by achievement.

I have thus far been describing the simpler type of village. In the larger groups it is common for the headman of the matrilineal group to live in the village where his matrilineal group is. There he usually brings one (or sometimes more) of his wives to the village, where she lives particularly. The daughters that are born to her do not return to the matrilineal group from which the headman's wife came but marry and set up households near their mother in the village of their father. Thus there develops in time a second matrilineal group in the village, alongside the first matrilineal group, and related to it through the headman. At this point we may say that the man's position has changed from that of headman of a village containing a single matrilineal group, to the more complicated and less secure one of village headman over a more heterog-

genous group, in which his jurisdiction over one part of the village arises from his position as the warden of a matrilineal group, and that which he exercises over the other matrilineal group derives partly from his position as a non-matrilineal relative and partly from his own personal qualities. The warden of the second matrilineal group is the headman's own son and it is he who takes over all the functions proper to that position, but the succession to the headmanship is a man's sister's son, usually, though not invariably, the first-born son of the eldest sister. Each village headman in turn brings his wife to live in his village and each headman's wife in turn tends to set up a local group which is of a different lineage affiliation from that of the headman. In addition to this the warden of the matrilineal group formed from the first headman's children tends in due course to live patrilocally and the children of his wife set up yet another foreign group in the village. Hence, theoretically, with each generation the number of opposed groups in a village doubles itself, and in a few generations, were this to continue, the position would become extremely complex. In fact a village of long standing is seen to be composed of a central lineage group to which the headman belongs, and a series of other lineage groups related to the headman's lineage group through one or other of the past and present headmen of that village. Such groups of different lineage make-up are usually mutually opposed and are held together only by the combined influences of a weak patrilineal connection with the headman's lineage and the personality of the present headman.

This situation is clearly an uneasy one for the headman. His wife is looked upon as a stranger and is often made to feel it. The headman's matrilineal group often expresses its hostility and jealousy towards her. The children of the two groups are on no easier terms. They call each other "cross-cousin" (jakwani) and are expected to worry one another. At the same time the hostility between them is formalized in joking relationships. This critical situation of the headman is made clear to him on the day of his succession. One headman was told: "As you have got wives, do not listen to what they say. They may be lying. Sometimes they will quarrel with your sisters and say that your sisters have been troubling you. This is false. When you hear these reports you may be unfair to your sisters and the people will say that you have broken your village through listening to women." Thus when conflicts arise between members of a village the headman is in a peculiar position and it is difficult for him to remain impartial. In such a situation the tendency is to call in an outsider to try to settle the differences. Sometimes these differences are patched up and the village continues as a unit. But, particularly after the death of the first village headman, the tendency is for one of the groups to move away to a completely new area, there to set up a unit of its own.

I quote an actual case to illustrate this procedure:

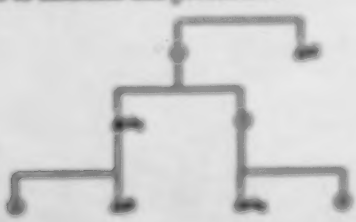

S: Mitchell E-5 (1946-1948) 1949 FT7 Yao FT7

(21) "In 1948 village A had about 30 huts in it. A certain man B was the son of the previous headman called A_1 and hence mother's brother's son or cross-cousin of the present headman called A_2. B had two wives living patrilocally and while B was serving in the Army he had a letter from one of his sisters (i.e. his mother's brother's daughter or cross-cousin to the headman) to say that A_2 was sleeping with B's wives. When B returned he started making inquiries from his wives and he eventually secured a confession from them. B then went to a man called C, who stood in the relationship of mother's brother to the original A_1 and complained about the behaviour of the village headman. C also instituted inquiries and ascertained that it was true. C then approached a local headman of some standing (whom I shall call D) and asked him to adjudicate in the case. D pronounced A_2 guilty and awarded compensation of £5. 10s. to B. B, however, refused to take the money, and said that he wished to leave the village. D observed that he had every right to do this and that A_2 had no right to complain "since he had broken the village himself". B took his security-group, who occupied about twenty of the thirty huts, to a place about thirty miles away and set up a village of his own. The security-group of the village headman A_2 remained behind in the old village."

(22) 578 (24)

This case illustrates the points that I have made. It shows how the two groups in this village stood opposed to each other in that B's sister wrote to tell him of A_2's conduct. Also when the village did break up it did so along certain very clear lines of genealogical relationship. Second, it illustrates the operation of the desire for dependants in that B refused what by Yao standards is a very large sum of money for compensation and preferred to move off and establish a village of his own. This attitude is also shown by the adjudicator who takes the point of view that regrettable as it is, the village must in the circumstances split, and while he appreciates the headman's feelings he makes it clear that the headman has no one to blame but himself. Third, it is interesting to note that this split took place after the death of the old village headman when the personal ties with both opposed groups were severed. Though the new village headman A_2 assumes the kinship status of his predecessor and also calls the children of A_1 "children" yet in fact he is their cross-cousin while the old village headman was their father.

The position of the village headman in Yao social structure may be summarized thus: the village headman is the leader of a group which may be a simple kin-group or a composite group of two or more opposed matrilineages linked to each other through himself or one of his predecessors whom he represents to them. The numerical size of the village determines the status of the headman, but the size that it can reach is limited by an inherent instability in the kinship structure which is expressed, in terms of their status system, first, in the competition of headmen for the membership of the security-group, and second, in the competition between the headmen and the members of the patrilineally linked security-groups, who wish to set up villages of their own.

(22) 559 (21)

The Yao are villagers as units and this is clearly shown at the initiation ceremonies of boys, where the initiates are kept in grass-sheds, each partition of which refers to a particular village. In the same way a person is identified as belonging to a particular village known by the name of the village headman. Thus a man might say: "I come from Kampamba's village."

(21) 551

5: Mitchell E-5 (1946-1948) 1949 FT7 Yao FT7

Village headmen themselves are graded in importance and there are certain marks of rank which distinguish the more important headmen. We have already considered one of the most obvious ways in which the village headman's importance is judged, that is, by the number of people in his village. In addition there are other ways in which village headmen may be distinguished both from the commoner people and from less important headmen. Thus, for example, some of the more important village headmen have the right to conduct initiation ceremonies, this right being granted to them by the man who is in a way the most important village headman of all—the Chief. The right to hold a boys' initiation ceremony (*lipanda*) is of more importance than the right to hold a girls' initiation ceremony (*ciputo*). Yet another mark of rank is the right to wear a plain crimson band around the forehead (*mlangali*), this right also being granted by the Chief.

The Administration has recognized the more important village headmen and has entrusted to them certain duties. By no means all the people called "village headmen" in this paper are recognized as such by the Administration, but I do not know of any person who has the right to wear a red band and is not also an Administrative village headman.

The status system has apparently been taken over from pre-European days, but it is uncertain to what extent these important village headmen had powers. Some to-day have all the marks of rank that the Chief has, i.e., they hold both boys' and girls' initiation ceremonies, are entitled to the special greeting accorded to important village headmen (*mbale*), wear a red band, have the right to be buried in the village and say in the common cemeteries, and to have their bodies prepared for interment by people of similar rank. It appears that such people exercised a certain amount of power, by reason of their personal qualities, over less powerful neighbours, and some were able in the past to demonstrate their autonomy by moving off to establish petty chieftaincies of their own.

Nowadays the Administrative village headmen have certain statutory duties to perform towards other minor groups actually independent but considered, for the purposes of the Administration, to belong to the village. The relative importance of the headmen is still the deciding factor in such questions as determining who is to be called in to adjudicate in a case. Thus, though for Administrative purposes a small village may be considered to be a part of a larger Administrative village under an Administrative village headman, yet when a case for arbitration occurs within that smaller village, some other person than the Administrative village headman may be called in to adjudicate.

Laws promulgated by the Administration are conveyed through the Chief to the Administrative village headmen and in this way a hierarchy of power is being introduced. The small village headmen now see the Administrative village headmen as a representative of the Chief and the Administration. The Administrative village headmen in turn see the Chief in this light. But in matters directly affecting the Administration, the small village headmen also see the Administrative village headmen as his own representative *vis-à-vis* the Chief and the Administration.

In general the village is by far the most important corporate body in the social organization of the Yao, not only as a significant primary group but also as an element

601 see THE VILLAGE HEADMAN IN BRITISH CENTRAL AFRICA
522 in the political sphere. The position of the village headman therefore is of cardinal importance and merits further study.

000 III. THE FORT JAMESON NGONI

Sc Mitchell E-5 (1946-1947) 1949 FT7 Tao FT7

AFRICA

JOURNAL OF THE
INTERNATIONAL AFRICAN INSTITUTE

JOURNAL DE
L'INSTITUT INTERNATIONAL AFRICAIN

ZEITSCHRIFT DES
INTERNATIONALEN AFRIKANISCHEN INSTITUTS

Editor
DARYLL FORDE

Assistant Editor
R. E. WYATT

VOLUME XIX
1949

[Title Page]

LONDON
OXFORD UNIVERSITY PRESS
GEOFFREY CUMBERLEGE

6: Mitchell E-5 (1946-1947) 1949 FT7 Yao FT7

AN ESTIMATE OF FERTILITY IN SOME YAO HAMLETS IN LIWONDE DISTRICT OF SOUTHERN NYASALAND*

J. CLYDE MITCHELL

1. Introduction

KUCZYNSKI has drawn attention to the deplorable incompleteness of censuses of colonial populations.[1] In order to make estimates of population trends among non-literate peoples, therefore, we have to rely on the analysis of samples drawn at random from the population as a whole.[2] The difficulties to be surmounted even for so limited an objective are considerable. (1.2.)

The first and most difficult problem is that of securing what may be considered a statistically random sample. Often there are not even accurate maps of the areas to be surveyed, and sometimes Administrative records of such larger units as villages are inaccurate. The universe from which the sample is to be drawn is thus often unmeasured and unknown. Even when this difficulty is overcome there are yet other practical problems to be solved. These may include factors such as climate, disease, inaccessibility of some areas, which militate against a successful survey.

However, more serious of all from the demographer's point of view is that much of the information that he wishes to obtain from non-literate people. Usually there is some suspicion and reticence in giving information about members of people,[3] and this implies that the investigator has to gain the confidence of the people with whom he is working. Another set of difficulties is encountered because the people themselves cannot easily answer questions framed in concepts with which they are not familiar. Probably the most outstanding of these is the question of ages of individuals, since few, if any, non-literate people reckon age in years as we are accustomed to do. Recourse must therefore be had to some method of estimating age. This can be done in different ways, depending on the people studied. Thus, for example, some people have what are called age-regiments into which all members of the tribe are initiated periodically (about every five or six years in the case of the Tswana of the Bechuanaland Protectorate) when they reach adulthood. Where there are no such indigenous systems, a chronology of events may have to be constructed as was done in the survey upon which this paper is based.

* I am grateful to Dr. M. Fortes and Dr. M. Gluckman of the Institute of Social Anthropology, Oxford, to Mr. J. C. Mason of the Rhodes-Livingstone Institute, and to Dr. Neil Charles, Central Statistical Office, Nottingham City Council, all of whom have read the draft of this paper and suggested many improvements. The responsibility for the calculations and the statements made is, of course, entirely mine.

[1] A. G. Kuczynski, 'Colonial Population', London: Royal Institute of International Affairs (1937). This has been reviewed in *Africa Comparative Journal*, no. 1 (Dec. 1948), as 'Population Movements: The Contribution of Demography to the Study of Social Problems', pp. 41-2.

[2] Sometimes drawn attention to the value of such samples: J. L. Sundbord, 'Demographic Samples in the Study of Backward and Primitive Populations', *Cape African Journal of Economics*, vol. 8 (Dec. 1945).

[3] Some of the difficulties in conducting demographic surveys among non-literate peoples are described by Sand W. Dugan. In particular he mentions the time the Bedouins had agreed to give some information to the Palestine Administration then changed their minds and refused to do so when the Anglo-American Committee's report on Palestine was published. Sand W. Dugan, 'The Demographic of the Bedouin Bedouin in May 1948', *Population Studies*, vol. 1, no. 3 (Dec. 1948), p. [illegible].

121 Often there is some cultural obstruction to the giving of information of certain types. The Yao, for example, will not readily mention the names of deceased persons. Often young children or people who themselves had no children are completely forgotten. Many polygynous men cannot remember the number of children that they have fathered.

122 Nevertheless, in spite of these and other similar difficulties, some investigators have been able to publish a certain amount of material bearing on the problem of the rate of increase of non-literate populations in Africa. All of them have been based on samples, though some of these could be considered statistically representative. Such studies in recent years include one in Southern Nigeria,[1] one from Tanganyika[2] based on a substantial sample of women, while M. Fortes has published some material on the Tallensi of the Gold Coast.[3] Schapera, incidentally to a larger study, has published some material on the Tswana of Bechuanaland Protectorate.[4]

The analysis of the Yaki by Enid Charles and C. Daryll Forde was mainly concerned with the calculation of the male net reproduction-rate, while the Culwicks and Schapera calculated female net reproduction-rates. Fortes considered both the male and female net reproduction-rates. The Culwicks have so far presented the most complete analysis of this type of material but were not able to classify their material into five- or ten-year age-groups, though they did use a wider age classification. The Culwicks, Fortes, and Schapera have all used the number of girls born to women now past child-bearing as an estimate of the female gross reproduction-rate. There are objections to this procedure which are outlined below.

123 In this paper an attempt is made to present in more detail some demographic material on an African non-literate people. The main object of the paper is to estimate the probable gross and net reproduction-rates prevailing at the moment in the area studied. The data on which this paper is based were collected incidentally to a study of the social organization of the Yao people living in the Liwonde District of Nyasaland in Central Africa.[5] In this study a number of typical hamlets, varying from 5 to 50 or more dwellings, were visited and genealogies of the residents recorded. In 20 of these hamlets further details were secured on points of demographic interest. Each census in a village took a day or two, and individual censuses were taken between November 1946 and March 1947. In this analysis of the material I have assumed that the survey was done at the end of 1946. The survey was conducted on a *de facto* and *de jure* basis in that the population who had slept in a hamlet the previous night was enumerated, but the mobility of the population is so high that usually it was necessary to consider a *de jure* count as constituting the true population of the village. The twenty hamlets studied were grouped in three areas, two in the area under H. A. Kawinga and one in H. A. Nyambi's area.

[1] Enid Charles and C. Daryll Forde, "Notes on Some Population Data from a Southern Nigerian Village", *The Sociological Review*, vol. xxx, no. 2 (April 1938).

[2] A. T. and G. M. Culwick, "A Study of Population in Ulanga, Tanganyika Territory", *The Sociological Review*, vol. xxx, no. 2 (April), p. 96, and vol. xxxi (1939), no. 3, p. 179.

[3] M. Fortes, "A Note on the Fertility among the Tallensi of the Gold Coast", *The Sociological Review*, vol. xxxi, no. 2 (July-Oct. 1939).

[4] I. Schapera, *Migrant Labour and Tribal Life*, London: Oxford University Press (1947), pp. 20 ff.

[5] This study was conducted as part of the Rhodes-Livingstone Institute's comparative study of the social organization of some Central African tribes. I am grateful to the Trustees of the Institute and to the Director, Dr. S. Gluckman, who have given me permission to publish this material.

They do not form a representative sample though they were casually selected for study and are fairly well scattered in the district in which they are situated.

In all there were 762 men, women, and children normally resident in the hamlets. This represents about 1·1 per cent. of the total population of the area. By normally resident, I mean that these people are considered to be members of the hamlets, and if they were absent, were away on only short visits of, say, about a month.

I have then counted polygynists as normal members of the hamlets, but have taken care to ensure that they were not included again if their second wives were in another hamlet of the groups studied. Men, women, and their children who had gone outside the area to seek work, for example, were not included.

The ages of all members of the population were estimated by relating the birth of the individual to some notable event, the date of which is known. In these hamlets it was always possible to find some old relative who could place the birth of younger people as occurring between notable events. After the two dates between which the birth occurred had been fixed, it was then possible to fix the date of birth more accurately by asking the older people to indicate the approximate size of the child at subsequent events, by picking out a suitably sized child in the village.

The following is the skeleton chronology used in this survey.

1870 Migration of Kawinga group from Kangwe Hill.
1881 First attack by the Mdewangwere Angoni.
1884 Second attack by the Mdewangwere Angoni.
1891 British attack on Mount Chilinda, the stronghold of Kawinga.
1896 British attack on Mgwan Mangoche, the stronghold of Jalasi.
1901 Death of Kawinga of the Angoni.
1907 The departure of Mr. Hoare, Collector of Revenue, from the Chilinda Station.
1908 Small-pox epidemic.
1911 Government regulations about the number of huts to a village (District Administration (National) Ordinance, 1911).
1914 Commencement of the First World War. This is a notable event because of the fighting in German East Africa, in which many thousand African troops took part. Also many men were used as porters carrying war goods from the railhead to Fort Johnston on Lake Nyasa.
1918 End of First World War.
1919 Influenza epidemic.
1921 General famine. This is known locally as *ndo ya Jim*, lit. "the hunger of Jim". Jim was an African Government clerk whose duty it was to dispense food to the starving populace.
1922 The coming of the famous witch-finders. These people, trading on the beliefs of the population, induced practically the entire people to drink a potion to prevent themselves from witchcraft. It is a most memorable event in the history of the area.*
1923 The introduction of Indirect Rule.
1940 The commencement of recruiting for the Second World War. The Liwonde district supplied a good proportion of men for the Army.
1946 End of the Second World War, i.e. the return of the soldiers.

The important thing about such a chronology is that the events should be deeply

* For details of this movement which is best generalized as Northern Mashala, see A. J. Mitchell, "A Modern Movement of Witchfinders", *Africa*, vol. [illegible], pp. [illegible].

improved on people's memories and remembered by most of the people. Thus it was desirable to find a useful reference date between 1910 and 1940. It might be thought that the death of King George V would be memorable. However, though all who were old enough at the time could remember the witchdoctor, only a few could remember the death of King George.

This skeleton chronology was filled in by events of more local significance. For example, Kawinga's brick house was built in 1919, the present Nyambi succeeded in 1915, &c. In addition, in particular hamlets there were men who had been in the Army, or had been to work in South Africa or Southern Rhodesia. Usually they could recall the date of going and sometimes of return, though they may have lost count of the intervening years. Such dates were often useful points. A small minority had actually recorded the dates of birth and death of children.

In addition to this, it was possible to fix the ages of the young children by reference to harvests, since the Yao reckon two years in succession, 'last year' meaning before the last harvest and 'the year before last' meaning the period before the harvest before last. Before the year before last, all time is merely *kale kale*, the only indication of the period being the pitch of the voice in which it is said or the presence or absence of an exclamatory 'E!' before speaking.

Particular care was taken to secure the ages of women and the dates at which they had borne children. There was, as mentioned above, some reticence in mentioning the names of dead children, but this was usually met successfully by questioning the women's male relatives who were generally more communicative on these points. In spite of the care taken to obtain this information, it was impossible to fix the ages of six women in the sample, and they have been excluded from the major part of the analysis. In addition, there were thirty-nine men who were not available for questioning. These were all adults, the husbands of women in the hamlets. The Yao are matrilineal and matrilocal, and men tend to spend much of their time away from the hamlet of their relatives-in-law. Since they are in many ways strangers in the hamlets no information could be obtained about them.

2. The General Background to Fertility

All the hamlets visited were occupied by members of the Yao tribe. The Yao are an Islamized people who achieved the questionable distinction of being efficient slave raiders at the end of the nineteenth century. They are a matrilineal and patrilocally matrilocal people living in hamlets of from about 5 to 100 here or more.

TABLE 1. *Age of Women at First Marriage*

Place	Age of women at first marriage												
	[illegible]	[illegible]	[illegible]	[illegible]	[illegible]	[illegible]	[illegible]	[illegible]	[illegible]	[illegible]	[illegible]	[illegible]	[illegible]
[illegible]	[illegible]	[illegible]	[illegible]	[illegible]	[illegible]	[illegible]	[illegible]	[illegible]	[illegible]	[illegible]	[illegible]	[illegible]	[illegible]
[illegible]	[illegible]	[illegible]	[illegible]	[illegible]	[illegible]	[illegible]	[illegible]	[illegible]	[illegible]	[illegible]	[illegible]	[illegible]	[illegible]
[illegible]	[illegible]	[illegible]	[illegible]	[illegible]	[illegible]	[illegible]	[illegible]	[illegible]	[illegible]	[illegible]	[illegible]	[illegible]	[illegible]
Totals	[illegible]	[illegible]	[illegible]	[illegible]	[illegible]	[illegible]	[illegible]	[illegible]	[illegible]	[illegible]	[illegible]	[illegible]	[illegible]

They are semi-subsistence cultivators who own no cattle and whose diet is therefore largely vegetarian, viz. sorghum and maize meal with ground-nuts and beans and certain leaves together with a small quantity of cassava roots.

Marriages are contracted early in life with little difficulty and ceremony. Formerly girls were espoused as mere children, and this still happens, but whether the custom is falling away or not I could not check quantitatively because the memories of the old women who had been married as children forty or fifty years ago could not be relied upon. Table I shows the ages at first marriage for a sample of [illegible] married women for whom this information was available.

Where marriage takes place so early we can expect that the mean age when child-bearing commences will also be early. Table II shows the median age of mothers at the birth of their first child.

TABLE II. *Age of Mother at Birth of First child*

Present age group of mothers	Age of mother at birth of first child									Total	Median age at birth of first child
	[illegible]	[illegible]	[illegible]	[illegible]	[illegible]	[illegible]	[illegible]	[illegible]	[illegible]		
Under [illegible]	[illegible]	[illegible]	[illegible]	[illegible]	[illegible]	[illegible]	[illegible]	[illegible]	[illegible]	[illegible]	[illegible]
[illegible]	[illegible]	[illegible]	[illegible]	[illegible]	[illegible]	[illegible]	[illegible]	[illegible]	[illegible]	[illegible]	[illegible]
[illegible]	[illegible]	[illegible]	[illegible]	[illegible]	[illegible]	[illegible]	[illegible]	[illegible]	[illegible]	[illegible]	[illegible]
Totals	[illegible]	[illegible]	[illegible]	[illegible]	[illegible]	[illegible]	[illegible]	[illegible]	[illegible]	[illegible]	[illegible]

From these two tables it is clear that nearly all women in the community are married early and that child-bearing commences very soon after marriage.

Table III shows the conjugal status of all women over the age of [illegible].

TABLE III. *Conjugal Status of all Women over the Age of [illegible]*

Present age group	Ever married	Wives of			Divorced	Widow	Total
		Monogamists	Polygamists	Lesser sharers			
Under [illegible]	[illegible]	[illegible]	[illegible]	[illegible]	[illegible]	[illegible]	[illegible]
[illegible]	[illegible]	[illegible]	[illegible]	[illegible]	[illegible]	[illegible]	[illegible]
[illegible]	[illegible]	[illegible]	[illegible]	[illegible]	[illegible]	[illegible]	[illegible]
Over [illegible]	[illegible]	[illegible]	[illegible]	[illegible]	[illegible]	[illegible]	[illegible]
Total	[illegible]	[illegible]	[illegible]	[illegible]	[illegible]	[illegible]	[illegible]

Here we see that of all women under [illegible], [illegible] (by per cent.) are married, though only by [illegible] per cent.), i.e. the wives of monogamists, have their husbands living permanently with them. Another [illegible] (per cent.) were married to men who were married to other wives, so that while their husbands were not living with them permanently they were nevertheless with them periodically. Eighteen other women (9 per cent.) were married to men who had left to work outside the area and hence were not living with their wives at all at the time of the survey. Visits by men to places of work outside the area may last a years or more. It should

[illegible] AN ESTIMATE OF FERTILITY IN SOME TAO HAMLETS IN [illegible]

[illegible] be noted that only 17—11 per cent. of the whole sample of 148 women—had never married and that 13, 8 per cent., of these (or 10 per cent. of the total) were under the age of 20 and therefore stood a good chance of yet marrying. Furthermore, 2 of the 4 women over 20 who had not married were known definitely to be incapable of marrying (one is lame and the other has violent epileptic fits).

There were 33 women who were divorcees or widows (22·3 per cent.), but it should be noted that 17 (or 11 per cent. of the 148 women) were over the age of 45 and therefore were past, or nearly past, the child-bearing period. These in the younger age groups stood good chances of remarrying. Table IV shows that though the divorce rate is high remarriage is common. By the time a woman's child-bearing period has ended she has been married on the average 1·7 times. Few marriages are contracted after child-bearing ceases.

Table IV. *Marriage and Dissolution of Marriage experienced by all Women aged the Age of 17*

Present age	No. of women	No. of marriages contracted	No. of divorces experienced	No. widowed	No. still married	No. of marriages per woman	No. of divorces per divorce	No. of years right per woman child-bearing	No. of years right per woman still living
[illegible]	[illegible]	[illegible]	[illegible]	[illegible]	[illegible]	[illegible]	[illegible]	[illegible]	[illegible]
[illegible]	[illegible]	[illegible]	[illegible]	[illegible]	[illegible]	[illegible]	[illegible]	[illegible]	[illegible]
[illegible]	[illegible]	[illegible]	[illegible]	[illegible]	[illegible]	[illegible]	[illegible]	[illegible]	[illegible]
[illegible]	[illegible]	[illegible]	[illegible]	[illegible]	[illegible]	[illegible]	[illegible]	[illegible]	[illegible]
Total	[illegible]	[illegible]	[illegible]	[illegible]	[illegible]	[illegible]	[illegible]	[illegible]	[illegible]

These statistics, showing the early age of marriage, the early commencement of child-bearing, the high incidence of marriage among women, and the high rate of remarriage during the child-bearing period, all point to the high valuation of reproduction adhered to Tao culture. This is consistent with their social structure, where the major corporate groups are kinship groups and reproduction is the principal method of recruitment to the group. Furthermore, because the standard of living is almost at subsistence level, children do not entail the economic losses they do in Western society. On the other hand, they are expected to support their aged parents when they themselves are economically independent. In other words, there are few factors militating against reproduction and many in favour of it.

We may expect the beliefs and customs surrounding child birth to reflect the value of reproduction. For instance, the Tao distinguish clearly between women who have borne children and those who have not. When a girl becomes pregnant for the first time she undergoes a special ceremony (*[illegible]*) attended only by women who have borne children. This ceremony has many of the features of a *rite de passage* and appears to mark the passing of the initiate to a new social status. Furthermore, women are ascribed status according to the number of children they have borne. The word *[illegible]* signifies a young woman who has not yet borne a child; *[illegible]*

* Because a child and a half of the marriages contracted by women had been dissolved by divorce by the time the child-bearing period had ended.

ahuda, a woman who is pregnant for the first time; *kamakwa*, a woman who has one or two children; *ajumbwa*, a woman who has three or four children, and *hatly*, *ahuba*, a woman who is past child-bearing age.

The information which I have been able to collect on abortifacients and contraceptives suggests that they are not used by married people merely to prevent their having more children, but that they are used by people who wish to avoid pregnancies which would be embarrassing, for example, by a woman whose husband is a labour migrant. To what extent the abortifacients and contraceptives are effective I cannot say; some, I know for certain, rely on a magical principle, for example, the medicinal cord worn by a man during intercourse. On the other hand, the abortifacients taken orally may have some active ingredients.

A barren woman or an impotent man is regarded with some embarrassment and the marriage ceremony (*ulumbwanyani*) of a childless couple will go to considerable trouble and expense consulting diviners and healers in an attempt to make their wedding productive. Childless couples are regarded as not fully adult and are treated in a patronizing way by those who have borne children. Since a man may marry other wives, barrenness in a woman is a cause of sorrow to her husband, but is not in itself a ground for divorce. Where the man is impotent, however, the woman may divorce him on this ground, though she usually takes a paramour and forces her husband to an action for damages which automatically leads to a divorce because it is the usual practice in these cases for the court to ask the woman if she wants to be divorced from her husband.

In contrast to the satisfaction shown at the birth of a child is the sense of sorrow evinced when a child is still-born or the woman miscarries. The Yao do not distinguish between still-births and abortions, both events being known by the word *dawanga*. This is a verb and refers to the process of abortion; there is no term for the dead foetus itself. I made no attempt to enumerate miscarriages and still-births because they are supposed to be due to breaches of sexual taboos on the part of the husband and wife, and interviewers were naturally reluctant to mention them. Miscarriages and still-births are greatly feared, and the woman is considered to be in a very dangerous condition until she and her husband have carried out a ritual purification. Should a man have intercourse with a woman who has miscarried and not yet been purified he will contract a disease called *kuwa* which is believed to be invariably fatal. Still-born children or aborted foetuses are buried in a hole dug with sharpened sticks in the bush by the women, whereas children who are born alive and die afterwards are buried in the graveyard in graves dug by men with hoes. The buried spots of still-born babies or aborted foetuses are marked with a stone or broken pottery, since it is believed that to step on them will induce an illness.

The concern of the immediate kin-groups is shown in the child-birth procedure. Birth normally takes place in a hut in the presence of the older female relatives of the woman and the female representatives of the man. The husband's representatives are necessary because the Yao, like many other Central African peoples, believe that an abortive child will not be born to the woman unless the *nambwa* (*kupwa*) the name of the genitor. If she persists in concealing the identity of the genitor, they

* *ahuda* = *ahubwa*, *hatly* = *hatly*. The same *kitla* and *ahuda* have both refer to the ivory beads traditionally worn by the women in the puberty initiation ceremony.

177 believe that she will die. The man's representatives are therefore able to establish the child's paternity from the birth-pang confessions of the woman.

176 The child is kept in the hut where it was born, for six or seven days, while the umbilical cord dries and falls off. During this time (half) the child is unnamed, and (203) it is named only when it is taken out of the hut. Should it die during this period of seclusion it remains unnamed and is referred to by a special term (Dinga, pl. *mengi*).

(148) I have therefore been able to enumerate live births by means of the distinction made between miscarriages and still-births (*Awanage*) and children who lived long enough to be referred to as *mengi*. After the birth of the child the women may not have intercourse for four or five months. To do so would be to endanger the life of the

176 (202) child with a disease called *mbiba*,* which is contracted by a sexually inactive person

177 when he comes into contact with a sexually active person. The husband may have intercourse with a second wife, but must take care to cleanse himself so that he does not endanger the life of his child. When the child is about 4 or 5 months of age the parents perform ritual intercourse and medicate the child against the mystical dangers of sexual activity; sexual relations are then resumed.

173 The Tao say that a second child should not be born while the first is still being

(165) suckled. Since lactation continues for about two years I am uncertain whether monogamous unions continue, as they say they do, or whether coitus interruptus is

173 practised. It is quite usual for husbands to become labour migrants when their

173 children are still very young. I have known women to write to their husbands who are away working and tell them to return because their children have 'grown', i.e. have been weaned. Labour recruiters had difficulty in recruiting men immediately after the soldiers had been demobilized at the end of the war, because the women objected, saying that they had remained childless long enough and the men must first wait until children were born. However, actual examination of birth-dates

(164) shows that children are sometimes born within a year of one another and sometimes there are quite big gaps. The two-year gap between children is probably an ideal which few attain.

5. The Estimation of Fertility

(a) *Sandberg's Age Division*

128 As a preliminary estimate of fertility, Sandberg's trichotomy of ages may be considered. The argument behind this division of the population into Youth, Middle Age, and Old Age is that those populations with a high proportion of youth have a greater tendency to increase. Table V shows this trichotomy for the Tao with the same essential for some other populations shown for comparison. Where the gross reproduction rate is known for the period shown in the table, this is included.

128 At any one time a certain proportion of the population is absent from the area,

(4.2) usually as some labour centre. Hence the proportions of the population are distributed abnormally. In all these appeared to be a total of sixty-three men, women, and children absent from the hamlets, who would otherwise have been living there. Hence in Table V these have been included in the totals in the 'Tao with absentees' proportions.

(19) * A disease of this sort is believed in by many Central African tribes. Among the Nyanja-speaking peoples it is known as *mapele*.

Table V shows that the age distribution for the Tea sample is very similar to outside other populations commonly held to have high birth-rates. There appears to be some correlation between the proportion of youth in a population and the gross

TABLE V. *Sandberg's Age Division*

Population	Tea	Youth 0-15	Adult age 15-40	Old age over 40	G.R.R.
Staff	[illegible]	[illegible]	[illegible]	[illegible]	[illegible]
Tea with dependents	[illegible]	[illegible]	[illegible]	[illegible]	[illegible]
Blackfoot	[illegible]	[illegible]	[illegible]	[illegible]	[illegible]
Olympia	[illegible]	[illegible]	[illegible]	[illegible]	[illegible]
Greenwalds	[illegible]	[illegible]	[illegible]	[illegible]	[illegible]
Cuba	[illegible]	[illegible]	[illegible]	[illegible]	[illegible]
Japan	[illegible]	[illegible]	[illegible]	[illegible]	[illegible]
Egypt	[illegible]	[illegible]	[illegible]	[illegible]	[illegible]
Czechoslovakia	[illegible]	[illegible]	[illegible]	[illegible]	[illegible]
New Zealand	[illegible]	[illegible]	[illegible]	[illegible]	[illegible]
Denmark	[illegible]	[illegible]	[illegible]	[illegible]	[illegible]
Sweden	[illegible]	[illegible]	[illegible]	[illegible]	[illegible]

* There were 27 in the sample whose age was not known. These were all adults and have been included proportionately in the two adult groups.

† All data for other populations taken from *The League of Nations Statistical Yearbook* 1938/39.

‡ Unemployed between ages 15-40 and over 15-40.

reproduction rate. Judging from the material presented in Table V a high gross reproduction rate may be expected among the Tea where the proportion of youth is much higher than in the case of those whose gross reproduction rates are quoted.

(b) The Proportion of Children under 5 to Women 15-50

Fertility may be judged more accurately than by this inaccuracy by considering the proportion of children under 5 to the total number of women between the ages of 15 to 50, i.e. the fertility ratio.* In the whole sample there were 147 children under 5 and 150 women between the ages of 15 to 50. This is a ratio of 980 children per 1,000 women. However, women who are going away from the area for a long time, as, for example, wives of men who are going with their husbands to some labour centre, possibly in South Africa or Southern Rhodesia, usually leave their younger children with their matrilineal relatives. This means that the ratio quoted (980 per 1,000) is, in reality, an over-estimate of the true ratio. In order to arrive at a more estimate of the ratio we must consider the children actually born to women in the sample. Table VI classifies all children both dead and surviving born to women between the ages 15 to 50. From this table we adduce that there were 150 women between the ages 15 to 50 (for whom details were available), and among them they had 147 surviving children under the age of 5. This is a fertility ratio of 798 per 1,000 women. Table VII shows the fertility ratio for 18 communities with their gross reproduction rate for the same period as the fertility ratio.

* It is more usual to take the number of women between 15 and 40, though usually the age group between 40 and 49 has been used. I have taken the age limits 15 to 50 because of the early age of marriage, and because it appears that the average age of cessation of child-bearing is about 50 (see Table VIII). For a discussion of the reliability of this measure of fertility when birth registration is not practised, see T. Lynn Smith, *Population Analysis*, McGraw-Hill Book Co., New York (1948), p. 198.

pm AN ESTIMATE OF FERTILITY IN SOME TAO HAMLETS IN

Table VI. *Live-born Children, Alive or Dead at Time of Survey. Mothers aged 15 to 55*

16.2
16.3

Age of children at time of survey	Mothers	Alive or Dead	Number of years elapsed since birth of child								Totals
			[illegible]	[illegible]	[illegible]	[illegible]	[illegible]	[illegible]	[illegible]	[illegible]	[illegible]
[illegible]	[illegible]	[illegible]	[illegible]	[illegible]	[illegible]	[illegible]	[illegible]	[illegible]	[illegible]	[illegible]	[illegible]
[illegible]	[illegible]	[illegible]	[illegible]	[illegible]	[illegible]	[illegible]	[illegible]	[illegible]	[illegible]	[illegible]	[illegible]
[illegible]	[illegible]	[illegible]	[illegible]	[illegible]	[illegible]	[illegible]	[illegible]	[illegible]	[illegible]	[illegible]	[illegible]
[illegible]	[illegible]	[illegible]	[illegible]	[illegible]	[illegible]	[illegible]	[illegible]	[illegible]	[illegible]	[illegible]	[illegible]
[illegible]	[illegible]	[illegible]	[illegible]	[illegible]	[illegible]	[illegible]	[illegible]	[illegible]	[illegible]	[illegible]	[illegible]
[illegible]	[illegible]	[illegible]	[illegible]	[illegible]	[illegible]	[illegible]	[illegible]	[illegible]	[illegible]	[illegible]	[illegible]
[illegible]	[illegible]	[illegible]	[illegible]	[illegible]	[illegible]	[illegible]	[illegible]	[illegible]	[illegible]	[illegible]	[illegible]
[illegible]	[illegible]	[illegible]	[illegible]	[illegible]	[illegible]	[illegible]	[illegible]	[illegible]	[illegible]	[illegible]	[illegible]
[illegible]	[illegible]	[illegible]	[illegible]	[illegible]	[illegible]	[illegible]	[illegible]	[illegible]	[illegible]	[illegible]	[illegible]
[illegible]	[illegible]	[illegible]	[illegible]	[illegible]	[illegible]	[illegible]	[illegible]	[illegible]	[illegible]	[illegible]	[illegible]
[illegible]	[illegible]	[illegible]	[illegible]	[illegible]	[illegible]	[illegible]	[illegible]	[illegible]	[illegible]	[illegible]	[illegible]
[illegible]	[illegible]	[illegible]	[illegible]	[illegible]	[illegible]	[illegible]	[illegible]	[illegible]	[illegible]	[illegible]	[illegible]
[illegible]	[illegible]	[illegible]	[illegible]	[illegible]	[illegible]	[illegible]	[illegible]	[illegible]	[illegible]	[illegible]	[illegible]
Totals	[illegible]	[illegible]	[illegible]	[illegible]	[illegible]	[illegible]	[illegible]	[illegible]	[illegible]	[illegible]	[illegible]

* Stillbirths are women whose children were not in the families as their data upon could not be determined.

Table VII. *Fertility Ratios and Gross Reproduction-rates for Eighteen Countries**

16.2
16.3
171

Country	Year	Fertility ratio†	G.R.R.
[illegible]	[illegible]	[illegible]	[illegible]
[illegible]	[illegible]	[illegible]	[illegible]
[illegible]	[illegible]	[illegible]	[illegible]
[illegible]	[illegible]	[illegible]	[illegible]
[illegible]	[illegible]	[illegible]	[illegible]
[illegible]	[illegible]	[illegible]	[illegible]
[illegible]	[illegible]	[illegible]	[illegible]
[illegible]	[illegible]	[illegible]	[illegible]
[illegible]	[illegible]	[illegible]	[illegible]
[illegible]	[illegible]	[illegible]	[illegible]
[illegible]	[illegible]	[illegible]	[illegible]
[illegible]	[illegible]	[illegible]	[illegible]
[illegible]	[illegible]	[illegible]	[illegible]
[illegible]	[illegible]	[illegible]	[illegible]
[illegible]	[illegible]	[illegible]	[illegible]
[illegible]	[illegible]	[illegible]	[illegible]
[illegible]	[illegible]	[illegible]	[illegible]

* From the League of Nations Statistical Yearbook, [illegible]. Only those countries which showed gross reproduction rates based on those years data and in which adequate age groupings were used.

† [illegible] the age-limits up to the three calculations.

(210)

6: Mitchell E-5 (1946-1947) 1949 FT7 Tao FT7

There is, as one would expect, a close association of the fertility ratio with the gross reproduction-rate. In fact, the product moment correlation coefficient for this series of data is 0·978 ± 0·011. By fitting a straight line to the series of points it is possible to make an estimate of what we could expect the Yao gross reproduction-rate to be on the basis of a fertility ratio of 778. When this is done, the expected gross reproduction-rate falls between 1·39 and 1·47.[1] It is not suggested that this figure is a reliable estimate, since the mortality rate in the first five years of life must affect the association between the two measures. There are almost certainly differences in this respect between the relatively advanced countries, used to derive this estimate, and the people with whom this paper is concerned. This estimate is used here merely to check the estimate of the gross reproduction-rate arrived at by other means, having such procedure on the assumption that differences in child mortality are not sufficient seriously to upset the correlation. 163

(c) *The Number of Children born to Mothers*

Table VIII shows the number of children born alive to women in the sample by age-groups. The Cobwicks, in their survey of population in Ulanga District in 163 171

TABLE VIII. *Numbers of Live-born Children to Women of All Age*

Age-group	No.	0	1	2	3	4	5	6	7	8	9	10+	Totals d	Totals ♀	Totals T	Rate per woman d	Rate per woman ♀	Rate per woman T
15-19	11	10	1	—	—	—	—	—	—	—	—	—	1	—	1	0·09	0·00	0·09
20-24	34	28	3	3	—	—	—	—	—	—	—	—	6	3	11	0·18	0·17	0·33
25-29	38	3	11	8	3	2	—	—	—	—	—	—	18	22	40	0·84	0·79	1·63
30-34	31	2	11	6	5	3	4	2	—	1	—	—	37	68	105	1·19	2·19	3·38
35-39	19	1	3	4	6	3	2	1	1	—	—	—	40	40	84	2·11	2·11	4·42
40-44	18	—	1	4	2	7	1	1	—	1	—	—	38	44	84	2·11	2·44	4·67
45-49	10	—	1	1	1	1	1	1	4	—	—	—	47	50	97	4·70	5·00	9·70
50-54	9	—	1	—	1	1	—	1	—	1	1	3*	34	22	56	3·78	2·44	6·22
55-59	8	—	1	1	—	1	1	1	1	—	1	1†	23	27	50	2·88	3·38	6·25
60-64	9	—	—	1	1	1	1	—	1	—	1	1‡	18	27	45	2·00	3·00	5·00
65-69	9	1	—	1	1	—	1	—	1	1	1	—	16	23	39	1·78	2·56	4·33
70-74	10	—	—	1	1	1	—	1	—	1	1	1§	36	40	80	3·60	3·60	8·00
75+	6	1	—	—	1	—	1	1	1	—	—	—	14	12	26	2·33	2·00	4·33
Total	1,078	77	38	31	30	30	16	13	9	5	6	6	326	380	704	1·51	1·76	3·26

* Eleven live births. † Ten live births. ‡ Eleven live births. § Two mothers with ten live births and one with twelve live births. ¶ Excludes six women whose ages are unknown.

Tanganyika Territory, calculated the average number of live births per woman at various ages. These were as follows (Yao figures for comparison):

	Ulanga	Yao
Under 20 . .	0·91	0·17
20-30 . . .	1·99	2·07
30-40 . . .	2·49	3·62
Over 40 . .	3·73	3·70

This seems to support their conclusion that the birth-rate had suffered during the

[1] The equation for the regression line is $X = a + bY$, where X is the G.R.R. and Y the fertility ratio. The standard error of the estimate is 0·13. A range of two standard errors was used in this estimate.

6: Mitchell E-S (1946-1947) 1949 FZT Yao FZT

163 last twenty to thirty years, and that it was then returning to normal since the
171 number of live births in the under-50 age-groups agree in the two surveys, but the figure for the over-50 age-groups is substantially lower for the Tangwyika material than for the Yao.

114 The Culwicks, Fortes, and Schapera have used the number of live females born
128 to women past child-bearing as an indicator of the gross reproduction-rate. It was
163 not possible to record whether the women in this sample had passed the menopause or not. From Table VIII we see that there is no upward trend in live births per woman over the age of 50. We may therefore take this age as representing the age at which child-bearing ceased. There were 45 women over the age of 50 and they had between them borne 133 live females. This is an average of 3·13 per female.
(171) This differs substantially from the figure that the Culwicks arrive at in their study, viz. 1·56.[1] It agrees, however, with the estimates made for the Tallensi (3·1)[2] and for the Tswana (2·34).[3]

There are, however, some serious objections to the use of this figure as a measure of the prevailing gross reproduction-rate. First, it does not take into account those mothers who did not survive the child-bearing period. If it is only the most fecund who die before menopause, we are, in fact, dealing with a sample which is unrepresentative, in that the least fecund are automatically selected. The opposite may also be true, of course, but the fact remains that such an estimate is based on an unrepresentative sample of mothers. Second, it represents the average fertility prevailing over the last fifty or sixty years. If there has been a large change in the fertility at some time during this period, this is included in the average and obscures the rate which prevails now. For example, the material presented by the Culwicks shows that the gross reproduction-rate must be higher than 1·56. The low figure in this case, they suggest, is caused by the famine which followed a rebellion in 1906.

(d) *A More Direct Estimate of Fertility*

128 In order to arrive at a figure which would reflect conditions prevailing more
163 recently, a series of tables was constructed, which showed (according to my census sheets) the number of children born in each year between 1917 and 1946, and the number of women in the different five-year age-groups for each of those years. Hence each woman who appeared in the first year (1917) was also counted in 1918. As each new year was considered some had turned 50 and were excluded, and others had turned 15 and were included. Therefore a gross reproduction-rate was calculated for each year from 1917 to 1946. These rates were averaged by adding together the number of women shown in each five-year age-group for five years and adding the number of children born during those five years, and by dividing to arrive at average specific fertility rates. The five-year averages were as follows:

1917–21	4·18	1932–6	2·23
1922–6	3·33	1937–41	3·22
1927–31	3·12	1942–6	2·83

There appears to have been a definite trend in this series, falling from the end of the

[1] The total of 3·13 children per woman was divided by 2 in order to arrive at the number of females per woman.

[2] M. Fortes, op. cit., p. 108.

[3] I. Schapera, op. cit., p. 23.

but was to a trough in 1931-6 and then beginning to rise again. However, with a sample as small as this one, and since we are relying on memory for most of this information, it would be unwise to accept this as significant. These tables have in turn been combined into three tables each covering one ten-year period from 1917 to 1946. These are shown in Table IX.

TABLE IX. *Average Gross Reproduction-rates in Ten-year Periods since 1917 to 1946*

Ages of women	1917-26			1927-36			1937-46		
	No. of women*	No. of live-born females	Annual average specific fertility rate	No. of women	No. of live-born females	Annual average specific fertility rate	No. of women	No. of live-born females	Annual average specific fertility rate
15-14	[illegible]	1	0.006	188	6	0.006	148	0	0.000
15-19	172	15	0.014	227	48	0.083	229	11	0.060
20-4	149	11	0.083	202	16	0.080	227	39	0.098
25-9	78	10	0.127	175	15	0.054	222	29	0.116
30-4	71	11	0.155	149	10	0.039	202	24	0.107
35-9	54	15	0.138	79	6	0.076	175	19	0.057
40-4	41	10	0.100	71	1	0.040	149	9	0.039
45-50†	18	1	0.077	34	1	0.033	79	4	0.076
Totals			0.600			0.525			0.598
G.R.R.		0.300			0.263			0.290	

* This does not mean that these totals represent the size of the sample. This is an average one and some women have been counted more than once.

† These rates are higher than might be expected. There appears to be no special reason why these rates should be so high, and the explanation probably lies in the smallness of the sample.

The obvious deficiency in this set of data is that the women who died are not included, and since many more of the 1917-21 cohort (i.e. those women who were in the child-bearing ages in that period) have died than, say, for the 1937-41 period, the rates calculated for earlier periods become more and more unreliable. There seems

TABLE X. *Average Gross Reproduction-rates over Ten-year Period 1937-46*

Age groups	1937-46			1940-6			1937-46		
	Women	Girls	Rate	Women	Girls	Rate	Women	Girls	Rate
15-14	60	..	..	68	0	0.000	148	0	0.000
15-19	198.5	15	0.065	144	8	0.056	240.5	11	0.061
20-4	200	34	0.070	193	25	0.128	396	59	0.098
25-9	140	18	0.127	200	21	0.104	344	39	0.116
30-4	96	11	0.115	156.5	11	0.088	250.5	24	0.096
35-9	55	5	0.093	94	6	0.064	189	11	0.058
40-4	42	1	0.030	88.5	3	0.038	129.5	4	0.062
45-50	17	2	0.118	42	2	0.048	79	4	0.076
Totals			0.628			0.565			0.595
G.R.R.		0.290			0.263			0.285	

no way of circumventing this difficulty for the earlier periods, but some correction for this may be included in the 1937-46 rates. All those women who were in the child-bearing ages when they died between 1937 and 1946 were extracted and

128 163 included in the material that was prepared for Table IX. In this way it was possible to construct Table X which shows as close an approximation as we can get to the gross reproduction-rate from the material on hand.

Since the exact date of death was unknown (i.e. day and month) it was assumed that at death the women were at the mid-point of the age-group. Therefore the figure 158·5 in Table X represents, for example, 317, 158 women who passed through one particular year and 1 woman who died in that year.

The revised rates for the two five-year periods 1937-41 and 1940-4 are not greatly different from those calculated without taking account of the women who died. The average gross reproduction-rate over the ten-year period 1937-46 falls within the limits of expected gross reproduction-rate as calculated from the fertility ratio (2·47 to 2·95; see p. 303), and is not widely different from the estimate derived from women who have passed child-bearing (3·73; see p. 304).

(c) *General Conclusions about the Gross Reproduction-rate*

163 In general we may observe that from the material on hand the gross reproduction-rate for this sample has always been high. This is confirmed since, first, the number of live-born females born to women over the age of 50 is high (3·73); second, the lowest rate calculated for the past is 2·35 for 1932-6, though not too much reliance should be placed on the validity of this; and third, the rate calculated for the last five years which, since mortality of dead children would still be fresh, is probably quite accurate, is 2·85.

114 163 With a sample as small as the one used in this survey a certain amount of variability is to be expected. Also since all ages are merely estimations based on the memory of informants, one can only expect approximations over fairly long periods of time. For this reason it is probably safer to use the five-year average 1940-4 as an indicator of the present gross reproduction-rate, or even the ten-year average 1937-46. In this case, we may estimate the present gross reproduction-rate at about 2·8 or 2·9.

4. The Net Reproduction-rate

128 165 Of course, no mortality statistics for the African population are available. Hence it is necessary to construct a make-shift survival table in order to arrive at some estimate of the net reproduction-rate. This is set out in Table XI. In this table I have assumed that the mean age of each five-year group is 3 years older than the lowest age in that group, i.e. the mean age of the 35-9 age-group is 38. It would have been more consistent to take this mean to be 37·5, but since the ages at death are not accurately known there seemed little point in doing this.

The problem then becomes: what proportion of girls born to mothers of average age 28 years (for example), i.e. to the 25-9-year age-group, will themselves survive to be 28 years of age?

In order to arrive at this proportion all the girls born between 1934 and 1943 who were recorded on family census forms were abstracted, i.e. 131. Of these 16 died before reaching the age of 4, so that we can assume that 85 per cent. survived to the age of 4 and over. For the mortality of the children between 4 and 8, those born between 1929 and 1938 were considered. There were 111 of these, but 14 died before reaching the age of 4. Hence we consider only 98 (as recorded in column iii

of Table XI) as surviving to the age of 4 and beyond. Of these, 1 died before they turned 8 (see column v) which indicates a survival of [illegible] per cent. for this period. It will be remembered that [illegible] per cent. of all girls born alive survived to be 4 years old, and now we know that [illegible] per cent. of these lived to be 8 years old. Hence,

TABLE XI. *Survival Table: Females*

Year of birth of females	Age groups through which females born in years 0-4 and 5-9 have survived and passed (years of life)	No. of females surviving age-groups	No. of females who died before passing out of age-group	No. of females who survived through age-group	Per cent. of females who survived age-groups	Survival rate	Smoothed values
i	ii	iii	iv	v	vi	vii	viii
[illegible]	[illegible]	[illegible]	[illegible]	[illegible]	[illegible]	[illegible]	[illegible]
[illegible]	[illegible]	[illegible]	[illegible]	[illegible]	[illegible]	[illegible]	[illegible]
[illegible]	[illegible]	[illegible]	[illegible]	[illegible]	[illegible]	[illegible]	[illegible]
[illegible]	[illegible]	[illegible]	[illegible]	[illegible]	[illegible]	[illegible]	[illegible]
[illegible]	[illegible]	[illegible]	[illegible]	[illegible]	[illegible]	[illegible]	[illegible]
[illegible]	[illegible]	[illegible]	[illegible]	[illegible]	[illegible]	[illegible]	[illegible]
[illegible]	[illegible]	[illegible]	[illegible]	[illegible]	[illegible]	[illegible]	[illegible]
[illegible]	[illegible]	[illegible]	[illegible]	[illegible]	[illegible]	[illegible]	[illegible]
[illegible]	[illegible]	[illegible]	[illegible]	[illegible]	[illegible]	[illegible]	[illegible]
[illegible]	[illegible]	[illegible]	[illegible]	[illegible]	[illegible]	[illegible]	[illegible]
[illegible]	[illegible]	[illegible]	[illegible]	[illegible]	[illegible]	[illegible]	[illegible]

we can say that [illegible] per cent. of all children survive to be 8 years old (see column vii of Table XI). These points were then plotted and the curve smoothed by hand. Smoothed values for the same ages, i.e. for 1913, 1915, &c., were then read off and are recorded in column viii of Table XI. These smoothed values represent the survival-rate over the last 15 years and may now be applied to the gross reproduction-rate for roughly the same period, i.e. for the period 1937-46 in Table IX. This is done in Table XII.

TABLE XII. *Net Reproduction-rate: Average 1937-46*

Age group	Female fertility rate	Survival rate	Smoothed fertility rate
i	ii	iii	iv
[illegible]	[illegible]	[illegible]	[illegible]
[illegible]	[illegible]	[illegible]	[illegible]
[illegible]	[illegible]	[illegible]	[illegible]
[illegible]	[illegible]	[illegible]	[illegible]
[illegible]	[illegible]	[illegible]	[illegible]
[illegible]	[illegible]	[illegible]	[illegible]
[illegible]	[illegible]	[illegible]	[illegible]
[illegible]	[illegible]	[illegible]	[illegible]
[illegible]	[illegible]	[illegible]	[illegible]
		Net reproduction-rate	[illegible]

The sum of column iv in Table XII (v.i) is the net reproduction-rate. This figure is obviously high, and we may look for the error in the possibility that some females who died are not recorded so that the mortality rate is underestimated. However, there seems to be sufficient evidence to conclude that the replacement rate is high.

This is partly confirmed by the fact that the increase in total population for parts of the Uvinsala district, with which this survey was concerned, according to the official census, is about 2·8 per cent. per annum.* At this rate we could expect the population to double itself in about 26 years. A net reproduction rate of 2 would mean that the population would double itself in one generation which we may take in this case to be about 25 years. Some of the increase shown in the census is no doubt due to immigration from Portuguese East Africa, but the high reproduction rate suggested by this material tends to confirm the opinion of our Administrative official, who maintained that immigration has virtually ceased since 1931.

5. General Summary and Conclusions

From material collected in three groups of hamlets in Uvinsala district of Southern Nyasaland it appears that the average gross reproduction rate within the sample over the last ten years was about 2·3 while the net reproduction rate was about 2·0.

There is no reason to suppose that the fertility of this sample is vastly different from that in any other part of the district, since the hamlets visited were casually selected; nevertheless, the sample is not a random one (in the statistical sense) and it is unsafe to generalize from it.

The Nyasaland Administration has only recently introduced machinery for the registration of births and deaths.* Until, therefore, these statistics are collected there seems to be no alternative but to rely on estimates as uncertain as those made in this paper.

* The population of Kasungu, Uvinsala, and Mzimbi districts of what was formerly known as Uvinsala district or Upper Rhin District of Nyasaland, increased from 39,170 in 1931 to 63,600 in 1941. Extracted from the trade returns returns in the D.C.'s office in Zomba.

* Actually the forms for this registration do not whether all the complaints of indigenous necessary for the calculation of the gross and net reproduction rates. Such statistics are mainly of the ages of the mothers and ages at death, and they have been included, no doubt, because it is assumed that this information is unobtainable. It is to be hoped, however, that when the system has become established, these complaints will be transferred.

Résumé

MALÉDICTIONS DES MÈRE (see p. 408)

L'auteur cite de nombreux exemples des malédictions employées parmi les Ibaw et indique l'importance comparative (?) accordée, suivant le degré de parenté entre le personne qui prononce la malédiction et celle à laquelle elle est destinée. La malédiction des mères est plus redoutée que celle des viveurs, et l'on s'étonnait à ce qu'un homme qui emporte un tombeau le sentiment d'avoir subi une injustice dans à son essayé du seul affligeant plusieurs générations. Des malédictions prononcées s'efficacement que moyennant le bétail pratique faire du seul au bétail seul à moins le liquide et pas seulement à l'individu. Pour être efficaces, les malédictions n'ont pas besoin d'être exprimées en paroles — une imprécation silencieuse, ou même un sentiment de dépit, peuvent avoir la même force qu'une malédiction prononcée.

9; Hathawich M-S (on. 1900) 1902 FT? Too FT?

THE JOURNAL

OF THE

ANTHROPOLOGICAL INSTITUTE

OF

GREAT BRITAIN AND IRELAND.

VOL. XXXII.

PUBLISHED BY THE
Anthropological Institute of Great Britain and Ireland,
3, HANOVER SQUARE, LONDON, W.

All Rights Reserved.
1902.

[TITLE PAGE]

T: Hathaway/ick M-5 (Jan.,1950) 1951 FTT Tao FTT

SOME ANIMISTIC BELIEFS AMONG THE TAOS OF SOUTHERN CENTRAL AFRICA.

By the Rev. Alexander Hetherwick, M.A., F.R.G.S., of the Blantyre Mission, British Central Africa.

175 The original home of the Tao tribe may be roughly described as the large and lofty plateau which lies to the east of Lake Nyasa, and is bounded by the Rivers Revuma and Lujenda. Forty years ago, about the time that Livingstone first entered the country, they began to be pressed on the north by the Mayawangwara, and on the east by the Makowa tribes. These invasions caused them to move, some westward down to the shores of Lake Nyasa or the banks of the Upper Shire River, and others southward to the Shire Highlands, Mount Zomba and the eastern slopes of Mount Mlanje. In every case they succeeded in either subjugating or expelling the original Mawri or Mang'anja inhabitants of those districts, and in no case have they lost their own independence.

[4]

175 177 Till about fifty or sixty years ago the Tao were untouched by any external influences, and when at first the Arab and coast traders from Kilwa and Zanzibar began to trust and trade with them they appear to have been little affected by contact with these visitors. Only a few of the younger men aped at following Mahommedan tenets, and these they only grafted on to their still cherished belief in the old fables of their fathers. The Koran, or a few of its texts, was added to the many other charms they had already hung about their necks. The faith which the first missionaries found them in possession of when they entered the country twenty-five years ago may therefore be held to be the unadulterated creed of the tribe from time immemorial.

[24]

174 The foundation of the Tao religion is to be found in the fanko, the soul, shade or spirit which every human being possesses, and which is the inspiring agent in his life. They profess to give no definite description of the nature or characteristics of this soul. In their minds however it is allied with the shadow, and would seem to bear to the body the relation which a picture has to the reality. Their word for a shadow is *chiwili*, which is also the term that they use to denote a picture, and pictures they associate with the shadow or shadows of the dead. I have known native refuse to enter a room where pictures were hung on the walls "because of the mwalo, souls, which were in them." The photographic camera was at first an object of dread, and when it was turned upon a group of natives they dispersed in all directions with shrieks of terror. "The European,"

[23]

To Hetherwick 56-5 (ex. 1905) 1951 FTT Tan FTT

they said, "we shall be able to take away their shadows and they would die." In their mind the *kadu* was allied to the shadow or picture, and the removal of it to the photographic plate would mean the disease or death of the shadow body.

As an instance of their faith in the close relationship of the *kadu* and the picture or shadow, I may relate the following incident. An influential Yao chief on Mount *Zomba* with whom I was on terms of intimate friendship for years, refused to allow himself to be photographed, fearing the consequence on his life. At last I was able to persuade him to give me a sitting, but on the sole condition that the picture was to be shown to none of his subjects but to be sent out of the country as soon as possible. He feared lest some ill-wisher might use it as a means towards his bewitchment. Some months afterwards the chief became seriously ill, and in the minds of his attendants his illness was attributed to some accident having befallen the photographic plate on which they believed the picture of their chief to be imprinted. If that negative had been broken in England, whether it had been seen, their chief's illness would be accounted for. Accordingly they appealed to the divining oracle, who, however, after consulting the "bone," assured them that the picture was intact, and that in consequence the disease must be ascribed to some other cause.

The *kadu* or soul is recognized as the chief agency in dreams. To dream is, in the Yao tongue, *lonpowela* *mondo*, where *mondo* is the plural form of *kadu*. The *kadu* is supposed to go out and visit the scenes and persons in dreams about, and in turn is visited by the *mondo* of others, dead or living. Pains in the body on rising from sleep in the morning are usually attributed to such nocturnal visits, while disease or pains of a severe type are ascribed to malignities by the whips of the *mondo* or more frequently of the witches who prowl around during the night watches.

Madness, idiocy and the ravings of delirium or disease are accounted for by a similar agency. The sufferers are *mondo*, they of the spirits, and a sudden fit of epilepsy or insanity is described as *pakowela* *mondo*, the spirits have seized him. Such persons are usually regarded with awe, as living in close contact with the unseen, but no incantations or enchantments are ever used to expel the spirit in possession. Some native doctors are credited with a knowledge of certain medicines which they say are effectual in such cases, but their application is no way differs from those employed in treating ordinary types of disease. Idiots and the insane are allowed to wander at will about the village, and only when violent symptoms show themselves as a danger to the community is any physical restraint put upon them.

The *mondo* are also recognized as the inspiring agencies in the ravings of the witch detective. This person, usually a woman, is called in to discover who is the guilty agent in cases of mysterious deaths or outbreak of an epidemic at a village. She arrives on the scene and takes up her abode for a few days previous to her actual demonstration. She mixes with the people, learns all the scandal and gossip of the community, and at night prowls about the houses searching for

witness. On the appointed day the doctor, inspiring mundu, to decree the spirits or innocents, to cure or prophesy, and in the vernacular of the doctor she calls out the name of some, usually who is afterwards accused of being the cause or which. Followed by a crowd of excited spectators she dances through the village spear in hand, stopping here and there to dig up charms or medicines which the supposed witch has buried in the ground as the instruments of his occult practices. It is only in cases of supposed special difficulty, or when the magnitude of the supposed crimes demands that special measures be adopted for their detection, that the services of such a witch detective are called in. In ordinary cases these appeals are made to the divining oracle who consults his "bone" as a means of discovering criminals of this nature.

Among the Yaos the human being is believed to be the sole possessor of a finda. I have been unable to discover any trace of a theory that the finda may pass into any animal or inanimate object and then confer upon it the nature or power of a fetish. Such belief is circulated among the Angoni and Achewa tribes to the westward by Ryan and the upper Shire River, and the intelligent Yao is aware of this, but he states that among his people no such belief exists. Even charms which have the effect of healing or warding off disease, or of protecting the wearer from war or wild beasts or other dangers by land or water, are supposed to possess this power without any idea of their being possessed by a finda or other spirit influence. The nearest approach to such a theory is in the case of certain powerful "doctors" who have obtained special medicine by reason of which, on death, they can transform themselves into lions, leopards, crocodiles, etc. Lepers also are sometimes supposed to become hippopotami. But both of these cases must be regarded rather as transmutations of body than transmigrations of soul.

It will be thus seen that the nature of the human finda is closely allied to that of the mundu, which are the inspiring spirits in medicine and in the century of prophecy or innovation. What the origin of these inspiring mundu is, or to whom they belonged when in bodily life, the Yao holds no theory. He is content to accept them as they are, mundu ipyo, "just mundu and nothing more," as he says.

It is, however, when we follow the disembodied finda after death and consider its position and power in the other world that we find ourselves in a region of higher spiritual activities.

In dreams or in fainting fits the finda leaves the body but only to return to it with the awakening consciousness. At death, however, it leaves its earthly abode never to return. It is now spoken of as having gone to mulungu or mizungu. This word, which lies at the basis of all Yao theories of the place of the soul after death, will be dealt with later on as regards its derivation and connections in the Bantu family of languages. In its natural use it bears two significations.

1. The word mulungu is in the first instance applied to the human soul or finda after death when it is considered as an inhabitant of the spirit world. Even in life a man, when he meets with any piece of good luck, will be heard to say, "It's my mulungu," as if his soul had an influence in determining the character of his

9:Shelburwich 36-9 (no. 198) 1962 FT7 Tao FT7

705 present fortunes. But it is in its bearing and after death, when it is considered as having an influence on the forward fortunes of those it has left behind in the world and consequently as a power to be propitiated and honoured, that the term *mulungu* is more strictly applied. Freed from the body it passes to *mulungu*, and there is regarded as endowed with powers which it never possessed when alive on

764 earth. To pray to such a spirit is described as *kulomba mulungu*, to worship *mulungu*, never finds in this case. Such *mulungu* worship enters largely into Tao religious or social life. In almost every Tao village there will be found a shrine which is the centre of the worship of the inhabitants. It consists of a carefully

765 built hut enclosed within a strong grass fence or hedge of a species of native plant.

766 The hut itself is built of the usual native materials—the walls of wooden posts, bamboos, and strong reed grass bound together with bark ropes and plastered over

767 with clay or stiff mud. The roof (of grass) laid on a framework of bamboos, and is generally covered with long strip of white or coloured cotton. On the ridge or apex of the roof are fixed a couple of flags or an umbrella or two. One wall is usually left open so that the interior is easily seen. Within, from the bamboo rafters are suspended handkerchiefs, shoes, bracelets of beads, etc., all offerings to the *mulungu* of the dead bamboo or chief from his friends and relatives. The floor is of clay carefully smoothed with mud in native fashion. A raised platform or mound of earth in the centre marks the spot where the grave was made. The

768 men or officials who provide or the funeral ceremonies, first dug for about 6 or 10 feet down in a perpendicular direction, and then on the western side of this well they hollowed out a shallow cave in the earth. In this the body was placed, laid on its side with the knees bent up under the chin, and the face turned towards the east. Various articles of personal property were next placed beside the corpse, clothes, ivory, grass, cows, bows, etc., and the mouth of the cave closed up with

769 wooden posts and a strong reed mat. The grave was then filled in and the surface carefully finished as we have seen. At the head of the mound a native pot was fixed in the ground for the reception of the offering of beer which is an almost invariable accompaniment of any act of worship paid to the *mulungu* of the dead.

768 Such a shrine marks the grave of almost every Tao chief or headman, and is

769 regarded as the abode of his soul or the spot where his *mulungu* is most accessible.

770 If his successor is about to undertake a long journey or enter on any warlike expedition against an enemy or neighbour, he must first *kutopa* adopt, place an offering here to secure the favour and assistance of the *mulungu* of the dead. Should a long-continued drought endanger the prospects of the grain crop, the departed chief must be solicited to send the lacking rain. A feast is first prepared, almost always of beer, sometimes with the addition of native porridge, fowl, or goats. The worshippers gather round the shrine bringing part of the food which they have prepared. Their priest for the occasion is the successor of the dead chief, sometimes one or other of the men who placed the body in the grave, or it may be that any other near relation of the dead man is chosen to represent the people and act

[602] as their spokesman. The nearer the relationship the more influence will he have with the dead.

with the dead. He approaches the shrine, opens the gate of the fence, takes a 769
pottle of beer and pours it into the pot on the head of the grave. Next he places
the basket of porridge and the plate of meat on the second bottle is and retires.
Kneeling down outside the gate facing the shrine and a few yards in front of the
people he shouts his prayer in a monotone, each petition commencing with "Chwaw,
chwaw," "Please, please." All the whilst the people clap their hands in unison
with him and sing the responses as they do in a native mass in the chief's court.

When the offering has been made at the grave, the rest of the beer or other
food is consumed by the worshippers. Grass are fixed as a token of respect to the [635]
dead, and the rest of the day is spent in dancing.

Such shrines are to be seen in almost every Twe village where the inhabitants 778
have been located for any length of time. They are regarded with awe—the little 769
boys as they pass whisper to each other in a warning tone, "wawaba." Should the
village be moved to any other district, the old shrine is not forgotten. Periodical
visits are made to it with the usual offerings. In cases where the old house has
been occupied by a people hostile to the old inhabitants, such visits are usually
made during the night, and the people awake in the morning to find that the old
chief's grave in their midst has been newly repaired, and a fresh offering of food
placed at its head.

Sometimes such shrines are found on the summits of hills which once may
have been a refuge from the enemy in time of war, but which now lie bare and
deserted. Thither in their need the people make their way with their offering of
food and beer, and their prayer for rain or suitable weather for the crops. Near
Hunyye such shrines are to be seen on the tops of Mount Sodzi and Mount
Mishiro. The former is the abode of the spirit of Kwikhwaba, and the latter of
Hyelele, both old Mawri or Mang'anja chiefs who doubtless fled there seeking
safety from the war of the invading Twe, and died leaving their wounds to be the
wabwapo or spirits of the mountain. Some years ago, during the war of an Angoni,
invasion, the Twe of Mount Sodzi fled to the hill-top for refuge, and there the
old chief Kapuri died. He was buried close to the grave of the old Kwikhwaba,
and now, when the Twe on Sodzi make an offering, it is to the spirit of Kapuri
that the homage is paid, and the shrine of Kwikhwaba has neglected.

Only the graves of chiefs or headmen are thus treated as shrines of worship. 554
The burying place of slaves and the common people lies away in the thick bush, 769
where only the rank grass or the thicket of old trees marks the spot. No offerings 769
are ever taken there, for such as are buried there can have no influence in the 778
spirit world. The dead are buried, the broken pot or basket is left on the grave to
mark the spot, and none ever seek to go there save to lay another in the same
neglected ground.

II. But the word wabwapo is used by the Twe with a wider application. 776
Etymologically the word is connected with the root *kafwapo*, which in so many 197
of the other branches of the Bantu tongue appears as *kafo* or *kawa*, and signifies 192
"great" or "old." It is the same root which appears in the Kafir word for God,

776, 777, 778, 779, 780, 781 Dzidzinudzi, which may therefore be rendered as "The old, old One," or "The great, great One." A like rendering may be given of the Tw-lwin mulungu, the "Old One," or the "Great One." In this or a modified form mungu (Swahili) is apparent in all the Eastern group of the Bantu tongues as the equivalent for "God" (see Father Torrend's *Comparative Grammar of South African Bantu Languages*). To trace it as Father Torrend does to any connection with Moloch, the god of the Phœnicians, is to attach undue weight to a chance coincidence of sounds.

[94] As we have already seen, the word mulungu is applied to the human finite when regarded as an object of worship, or as an inhabitant of the spirit world. But it is also used to denote that spirit world in general, or more properly speaking, the aggregate of the spirits of all the dead. The plural form of the word is rarely heard, unless when the allusion is made to the souls in their individualities. In the native use and form the word does not imply personality, for it does not belong to the personal class of nouns. Etymologically it is closely with the leg, heart, arm, head, etc., of the human frame. Its form denotes rather a state or property inhering in something, as the life or health inherent in the body. Among the various tribes where the word is in use as we have described, the missionaries have adopted it as the term for "God." But the mulungu Tw-lwin refuses to assign to it any idea of being or personality. It is to him more a quality or family of the human nature whose signification he has extended so as to embrace the whole spirit world. Even after I had endeavoured to impress on old Tw-lwin with the personality of the Godhead in the Christian sense of the term, using the term *Mulungu*, my listener began to talk of "Our Mulungu," "Mr. God," showing that originally to him the word conveyed no idea of the personality I was anything to it.

776, 777 And yet the Tw-lwin approaches closely to the idea of personality and a personal being, when he speaks of what mulungu has done and is doing. It is mulungu who made the world, and man, and animals. For in the interior of the continent, toward the north-west, beyond the plains and swamps of the Lungwa River and Lake Bangwulu, there lies, in Tw-lwin legend, an island in the midst of a lake called Kapichimya. On that island there is to be seen a large flat rock marked by the footprints of men and animals of all kinds. When that rock was now a heap of moist clay, mulungu created all living things and sent them across the sea to man, where their footprints remained to be afterwards hardened into the impressible rock. Such is the Tw-lwin legend of the creation of the world, and mulungu is always the Great Creator.

776 *Mulungu* is also regarded as the agent in anything mysterious. "It's mulungu," is the Tw-lwin exclamation on being shown anything that is beyond the range of his understanding. The rainbow is always "mulungu," although some [101] Tw-lwin have begun to use the Mang'anja term "uta wa Lesa," bow of Lesa.

Offerings are made to the spirit world or to mulungu as the great agency in 779, 780, 782 the affairs of human life. Outside the village, or beside the herdsman's hut, may often be seen a rough shed. In this are placed the first-fruits of the new crop,

T. Hutherwick M-S (m.,1988) 1982 ??? Tue ???

grass snake, leaves, pumpkins, peas, etc., as a thanksoffering from the villagers for their harvest. This is described (in Ashanti mythology) as worship of the tree in the village (sacrificial), where the men sit and talk or work, an occasional small offering of flour or beer is placed on any special occasion in the life of the village or any of its inhabitants. This also is Ashanti mythology. A decent native sitting down to a meal will, before beginning to eat, take out a small morsel of the food before him and throw it at the root of the nearest tree as an offering to mahoqo. On a journey a tra-veller will sometimes stop and lay a little flour in a pyramidal heap at the foot of a tree by the wayside or at an angle where two roads meet. This, like the others, is for mahoqo, the spirit world, the guardian of the wayfarer on his journey.

Thus the Tiv presents us with three stages of animistic belief :—

(1) The human footsteps or shade, the agent in dreams, delusions, etc.

(2) This footsteps regarded as mahoqo, and an object of worship and reverence, the controller of the affairs of this life, the active agent in the fortunes of the human race.

(3) And lastly, mahoqo as expressing the great spirit agency, the creator of the world and all life, the source of all things animate and inanimate.

And yet between these three conceptions of the spirit nature no definite boundary line can be drawn. The distinction in the native mind is over of the human. No one will give you a dogmatic statement of his belief on such points.

It is only through long association with them in their daily life seeing actual expressions of opinion or hearing of definite acts in relation to their worship or their dead, that one can get behind the reserve with which every Tiv man or woman approaches or alludes to the spirit world which lies beyond and after this.

[illegible] 8-5 (1946-1947) 1949 [illegible]

000

AFRICAN STUDIES

[Title Page]

EDITED BY

[illegible]

VOLUME 8

1949

Being the continuation of Bantu Studies,
which ceased with Vol. XX (1947)

PUBLISHED BY
WITWATERSRAND UNIVERSITY PRESS

R.Mitchell E-5 (1946-1947) 1947 F77 Tao F77

[P 141 A]

THE POLITICAL ORGANIZATION OF THE TAO OF SOUTHERN NYASALAND*

J. CLYDE MITCHELL

I. OUTLINE OF THE GENERAL CULTURAL BACKGROUND

* I have been helped and stimulated in the preparation of this paper by my colleagues of the Rhodes-Livingstone Institute, Dr. E. Colson and Mr. J. A. Barnes and by the staff of the Institute of Social Anthropology, Oxford, Prof. E. E. Evans-Pritchard, Dr. M. Fortes and Dr. Max Gluckman. I am especially indebted to Dr. Max Gluckman who was Director of the Rhodes-Livingstone Institute when I joined it, and who gave much of his time in checking and developing the presentation of this paper.

[101]

[1] Mainly Yao, Ngoni and Mlanje. The proportions are given in Table I and their relations briefly discussed later (p. 10). In general their cultural backgrounds are similar and what I have said of the Yao is true of the others.

[2] "The Outline of the Social Organization of the Yao of Southern Nyasaland" in Seven Tribes of British Central Africa, ed. E. Colson, (London: Oxford University Press, forthcoming).

[3] The position of the village headman in the internal structure of Yao villages is more fully described in my contribution to the symposium, "The Village Headman in British Central Africa" (with M. Gluckman and J. A. Barnes, *Africa*, 19[illegible], January 1949).

[p. 141 8]

(1) The people with whom this paper is concerned[1] occupy that part of Nyasaland between the Chilulo Range in the South; Mount Mangochi in the North; the Shire River in the West; and the Portuguese East African border in the East. This area is represented on the accompanying diagrammatic map. A more detailed description of the general social organisation of the Yao in this area, and of their history and general cultural background is to be published shortly.[2] At
(3) this point it is sufficient to say that the Yao are semi-subsistence cultivators living in village settlements ranging from a few huts to sixty or more, with an average of about twelve. This represents say a population average of about 60 per village but ranging from 15 to over 200.
(5) Those village settlements are inhabited by groups
(6) of kinsmen. In general there is a matrilineal core
(7) of kinsmen of whom the village headman, who
(8) has the same name as the village, is one. In some more complex villages there are subsidiary matrilineages related to the matrilineal core agnatically

[P.141 C]

through one or other incumbent of the position of village headman.[4] Succession to posts of authority, including that of the chief, is matrilineal. Ideally the succession should pass to the first-born son of a man's eldest sister, but this is not always followed, for the personal qualities of the successor are most important.

The total African population of the area studied is 65,000. There are one or two Indian traders and two Europeans permanently resident in the area. One European is a missionary in the north-east corner and the other an Agricultural officer in the north centre of the area. Part of the area is administered by the District Commissioner, Zomba, and part by District Commissioner, Fort Johnston, and these officers tour the districts under their jurisdiction. Occasionally other White officials and labour recruiters appear, but in the main, Whites are not often seen in this area. The one road traversing it is usually impassable for a part of the rainy season.

II. THE POLITICAL STRUCTURE
Before the whites came

173
643
167

It is difficult to picture what the political organization of the Yao was like before the Whites came into the area, but informants—especially the old men—do describe the conditions that existed in the early days, and in addition to this, there are some useful reports in Duff Macdonald's book[1] which was written before European influence was strongly felt.

Informants describe the movements of the Yao into Nyasaland in terms of small family groups under the leadership of a male matrilineal relative.[2] These leaders bear the same names as certain of the village headmen to-day, and the present village headmen claim to be their matrilineal descendants. Among the kin-group leaders were such outstanding personalities as Kawinga, Liwonde and Nkata.[3] These men were military and commercial leaders and much of their prestige derived from their prowess in trade and war, pursuits which in those days were intimately interdependent. People nowadays describe the chiefs as possessing many slaves, guns and gunpowder and having great "strength". In the history of the chiefs Nkata, Liwonde and Kawinga the pattern of conquest is similar. A group of village headmen under each chief moved into Nyasaland to settle either by treaty as Nkata who settled with a clan-relative among the indigenous Nyanja, or by direct conquest as Kawinga. After settling down they started sending out forces to subdue local chiefs until the boundary of the territory of some other powerful chief, usually another Yao, was reached. When this happened a definite territory was agreed upon by the two chiefs. Within this territory the population was increased by immigration from other areas or by slavery. Village headmen moved from a less to a more powerful chief because of the security he offered them. They were said to "seize the leg"

II. The Political Structure
BEFORE THE WHITES CAME

173 643 167 (*kukamula lukongolo*), i.e. to surrender to the chief in the area. Also the chief sent out expeditions to capture slaves or he purchased slaves with the cloth and beads he had exchanged for ivory at the East coast.

643 421 Within his territory certain privileges and rights were held by the chief and he had certain religious duties to perform in which the unity of the people in the territory was expressed. In general the chief had rights over any ivory either found or hunted in his territory. If a dead elephant were found the tusks belonged to the chief, though he usually rewarded the finder with cloth. If a man killed an elephant the tusk that lay on [224] the ground belonged to the chief while the other belonged to the killer. The killer's tusk was in- [439] cluded in the chief's caravan to the coast and its value paid in cloth to the killer when the caravan returned.

643 651 The chief was also entitled to an annual tribute of food and beer from all villages in his area, but this was used to entertain visitors who came to the court-village.

643 782 The chief's religious duties lay mainly in propitiating the spirits of his ancestors on occasions when the community at-large, in contrast to the chief's own private affairs, was either threatened or directly affected. The most obvious occasion was immediately before the rains came when flour was poured on the tree shrine and the spirits of the ancestors asked for good rains. Later when the rains were over a similar sacrifice was made asking for a good harvest. Sacrifices to the ancestors were also made on two other public occasions. They were made when some calamity had occurred or was believed to be impending. A run of unsuccessful campaigns induced Cingwalugwalu, a son of the Yao chief Mponda near Fort Johnston, to ask his father's father's brother to make secri-

[P. 142C]

173
643
[193]

[1] Dora MacDonald, *Africans of the Heart of Eastern Africa*, (London : 1902).

[2] The matrilineal male leader is called *anyanu ahendu* (warden of the ancestry group) the village headman *anyanu nsaal* (warden of the village) and the chief *anyanu ahendu* (warden of the land). The word *anyanu* could be translated as *anyanu* but see note p. 146. Important headmen and chiefs are both referred to by the term *anyanu*.

[3] The homorific Cv is dropped from all Yao proper names mentioned in this paper.

643 782 fice to the ancestors. The other public occasion was at initiation ceremonies. A successful initiation, i.e. one in which the initiates were not beset by misfortune, depended upon the goodwill of the ancestors of the chief. Initiates therefore gathered at the chief's court-village before the initiation, when the sanction of the spirits was asked and the initiates severally blessed. After this they scattered to the bush-schools near their villages only to return when initiation was completed and the chief received them into tribal society.

643 769 The people who had submitted themselves, willingly or unwillingly, to the rule of a chief, in turn expected certain services from him. He provided them, as we saw, with mystical protection through his ancestors. On a more pragmatic plane he was able to arm and co-ordinate military forces thereby giving his people protection from attack. Within his area of rule he was a common person of final appeal in the regulation of relationships of his subjects.

In these various ways, by propitiating his ancestor's spirits on behalf of his subjects, by settling differences between subjects, by co-ordinating defence and in fact by being a unique personality in the area, the chief became the symbol of unity of his tribal group. The symbolism was clearly noticeable on the death of a chief when a short period of social disorganization called *cipinimbe* followed. The members of the chief's village were allowed to pillage and to commit rape and other criminal acts without suffering legal action. The demise of the symbol of unity was followed by a period of disunity before the appointment of a successor restored the *status quo*.

622 [769] At the same time much of what has been said about the chief was true also of important village headmen. Village headmen also made sacrifices to their ancestors but only in domestic or village affairs. They too built up their prestige by slaving. Many villages in Southern Nyasaland to-day

622 are composed of the descendants of slave-wives of village headmen in days past. Like the village
643 headmen the chief was considered to be in danger from contact with death. He could not attend
622 the funeral of commoners, he could not eat the
761 chicken which was brought to him at the announcement of the death of a commoner (for a village headmen) or subject (of a chief). Should he do so
[753] he would suffer from a disease called *ndaka*. Also village headmen, like the chief were supposed to be well versed in medicine and were regarded with some awe on this account. The chief and the village headmen were distinguished from the commoners in these ways.

643 But, the chief himself was a village headman. He had to administer the affairs of his family
622 group and slaves as had other village headmen.
692 He was involved in the struggle for power going on around him because he was not lifted above these secular struggles as was, for example, the Zulu King.[1] Duff MacDonald records for example: "In a dispute between the inhabitants of different villages, the respective headmen represent their own subjects, and the chief is appealed to. All his decisions are final. Still the chief may otherwise have less influence than a powerful headman, and we have known cases where he simply contented himself with grumbling when his headman acted contrary to his desire; and in many criminal trials he is eclipsed by the sorcerers and pounders of poison."[2]
643 Again MacDonald records how the chief tried
622 to entice subjects away from a village headman at a trial by pointing out that the village headman had a poor character and was unsuitable to look after people.[2] While there seems to have been some evidence that a number of village headmen under a chief acted jointly in the face of a common danger, but apparently with no powerful military organization. Village headmen seem to have been almost entirely autonomous in their actions, slave-raiding on their own, even raiding villages who paid tribute to the same chief as they did.

8:Mitchell E-5 (1946-1947) 1949 FT7 Yao FT7
[P.143C]

643
622

[1] See MAX GLUCKMAN, "The Kingdom of the Zulu of South Africa" in M. Fortes and E. E. Evans-Pritchard ed., *African Political Systems*, (London: Oxford University Press, 1940), p. 28 *et seq.* The Zulu king had no immediate subjects but concentrated the military regiments about him so that he could use these to destroy his rivals.

[2] DUFF MACDONALD (1882), Vol. I, p. 155.

643 There is little doubt that village headmen did
622 wax in power and finally break away to form the
578 nucleus of a chiefdom of their own. The chief that a headman had left could do little to regain his lost subject and he had to rule not by tyranny but by tact. Duff MacDonald, for instance, records: "When a quarrel arises between the chief of the country and an important headman the latter may rebel and found a new kingdom, thus depriving the old chief perhaps of one-third of the villages in his dominion". [1] Nkanda is an example. "Nkanda of Cherasulo was at first a headmen of Kumpama's but rebelled and lives on the Southern side of that mountain an easy day's march from Blantyre." [2]

643 The leader was known, and is still known to-day, by the term *anyene cilambo*. This might be translated as "owner of the country" but the term "owner" in this context would be a mistranslation. I prefer to translate this phrase as: "The person with whom a certain area is identified". [3] Hence when a man says, as the Yao do: "I come from Kawinga's", he does not mean that the land is owned by Kawinga, but that Kawinga is the most important man in that area.
645 Among the village headmen in the area under a
631 particular leader there were a number of trusted
692 village headmen called *ndusa*, which term I
622 have translated as "councillors". These councillors had special duties to perform. They were in the nature of governors in outer areas and each had a number of other villages under his jurisdiction. By this I mean that these villages were supposed to take certain cases for trial to him and to approach the leader through him. The councillors were supposed to visit the village of the chief each morning and to report anything untoward. The councillors also had the important duty of advising the chief, particularly in connexion with raiding of neighbouring tribes. Councillors also arbitrated in the domestic affairs of the chief and in the all too frequent conflicts between the Chief, his sister's sons and his younger brothers.

088 chief, his sister's sons and his younger brothers.

693 Besides the councillors, there were a number of officials known as *mapungu* (sing. *lipungu*), which term I translate as court assessor. These officials have often been confused with the councillors, though they were a completely different set of officials. They were not necessarily village headmen though councillors were always so. Also the position of the court assessors, unlike that of the councillors, was not hereditary. Court assessors were chosen because of their wisdom and debating ability and often slaves were appointed. Councillors were chosen because of their general status in the community and once chosen tended to be succeeded by the heir, who for all intents and purposes, socially replaced his predecessor. The court assessors lived at the court of the chief and they were the correct channel of approach to him. No one could approach the chief without at first approaching a court assessor and reporting his business. The assessor's more important duty, however, was the sifting of evidence in cases in which the chief was arbitrating. The court assessor then recounted this evidence to the chief who delivered his opinion and awarded compensation.

643 554 In general the picture that we have of the political organization of the Yao before the Whites came, is that of a number of leaders of kinship groups, who by acquiring sufficient dependants and slaves were able to maintain a certain level of power. Certain groups of them were under the power of more influential leaders (the chiefs) who usually had sufficient resources to send trading caravans down to the coast, which in turn maintained his power over his neighbours. In this loose po. tical organization the importance of being able to control dependants was cardinal and the adage "a chief without people is nothing" (*mcilambo nuga nganakola ulundu, nganamu mcilambo!*) sums up the situation pithily.

8: Mitchell E-5 (1946-1947) 1949 FT7 Yao FT7
[P 144C]

[1] Duff MacDonald (1882), Vol. I, p. 157. [2] Duff MacDonald (1882), Vol. I, p. 32.

[3] Cf. G. Wauton, "The Political Organization of the Bantu of Kavirondo" in M. Fortes and E. E. Evans-Pritchard ed., *African Political Systems*, at p. 216: "The Logoli term *omwene* refers both to 'ownership' of objects and of persons. It differs of course, from our concept of ownership in several respects. Thus the *omwene* (owner) of a person is the one who has not only the foremost rights over him but also the foremost obligations towards him."

413
622

III. THE ENTRY Of The Whites

175 797 648 The first settlements in Nyasaland were in the Shire Highlands where a Church of Scotland Mission was built in 1876. In 1878 the African Lakes Company was founded to take over the trading activities of the Mission. As the White population grew the necessity for some non-missionary organization to regulate the relationships between Africans and the growing body of White settlers, who now included planters and traders as well as missionaries, became more and more pressing. Eventually in 1883 a British Consul was appointed. In 1891 to meet the activities of the Portuguese, a Protectorate was established and the military measures that had been proceeding against the slave traders were now intensified.

175 648 The military police used by the British authorities had arms which the Yao could not withstand, and even the most successful of Yao military groups was soon destroyed. Breech-loading rifles outshot the Yao's muzzle-loading guns and cannon were also used by the British in some actions. The British had a force of Sikhs well-trained in military manoeuvres. Even the previously impregnable Mount Cikala, so long held by Kawinga and his forces, was successfully assaulted. The superior arms of the British left an indelible impression on the Yao who had long conducted successful military campaigns, and in due course these arms came to be identified with the force of the value system of the Whites. One of the more immediate results of the success of White armaments was that certain Yao chiefs seized the initiative and used the British forces as a tool in their own political machinations. The history of the rise of Kalembo, although his country is outside the area of study of this paper, is interesting in this respect. Before the Whites came Kalembo, younger brother of Msamala, who was the father of the notorious Mponda, was an insignificant character. Just before the

8:Mitchell E-5 (1946-1947) 1949
[P.1458] FT7 Yao FT7

III. The Entry OF THE WHITES

175 British started actively to pacify the country, the sons of Mponda were at war with each other and
648 Cingwalungwalu was on the way to dominating the whole of the west of the Shire River bank above the Murchison falls. After the British had demonstrated their efficiency by a few attacks on some of Nkata's forces, Kalembo approached the British leader and complained of the war in his territory. The British forces accordingly attacked and destroyed Cingwalungwalu's forces thereby leaving the way open for Kalembo to establish himself under the British wing as an important chief of the west bank of Lake Malombe. Amongst the chieftancies studied in this paper there appeared to have been no direct use of the British military forces in internal politics.[1] The Whites in this way immediately became a factor in tribal political organization. First of all some chiefs endeavoured to use the military force of the Whites directly in their tribal politics. Later on as military actions came to an end the power of the Whites continued to be tapped by chiefs and other personalities in the political structure in order to manipulate the tribal political set-up to their own advantage. In the main the power of the British Administration though still an active agent in tribal politics is now present as an abstract and invisible but nonetheless potent force. How this is done to-day I hope to be able to show by an analysis of the interaction of chiefs, African civil servants and village headmen.

101 As a foundation to this view of Yao politics,
175 the detailed history of the three chieftains Ka-
619 winga, Liwonde and Nyambi is illuminating.
643 Kawinga, Liwonde and Nyambi all belong to the same division of the Yao tribe, i.e. Macinga. There are about nine such divisions but only four are to be found in Nyasaland. The Acisi live near the Portuguese East African border in the Fort Johnston area (Katuli's area) and the

8:Mitchell E-5 (1946-1947) 1949 FT7 Yao FT7
[P.145C]

648
175

[1] There is some evidence that Mposa the son of Liwonde may have helped the British forces to subdue a neighbouring chief, Cambu the son of Kawinga.

101 Amasinings in the Makanjila area of Fort John-
619 ston District, i.e. to the east of the south end of
the Lake near Fort Maguire. These two divisions
175 are insignificant when compared with the other
two divisions in Nyasaland. The third division
643 is the Mangoce Yao now settled around Blantyre,
while the last division, the Macinga, are settled
between Fort Johnston district and Zomba.
These divisions arose from a breaking up of the
Yao tribe which originally occupied the territory
between the Rovuma and Lujenda Rivers in what
is now Portuguese East Africa. These divisions
are not very significant to-day. Members of a
division recognise that they are more closely
related to each other than to the members of
another division, but this does not appear to
affect modern political life in any way.

619 The first Kawinga, Liwonde and Nkata [1]
175 all belonged to the Macinga division which had
settled near the tip of Lake Amaramba where it
551 empties into the Lujenda River. From this place
643 of origin, the groups associated with these early
leaders moved into Nyasaland. In addition to
belonging to the same division of the Yao tribe
the three leaders mentioned also had the same clan-
name, viz. ~~ambene~~. [2] The term that I have trans-
lated as clan-name is the Yao word *lukoyo*,
which may also be translated as "kind" or "sort".
Thus, if one asks a man the "kind" or "sort"
of Yao he is, his answer may refer to the major
divisions as above, i.e. Macinga or Mangoce
or it may refer to the clan-name. Clan-names are
inherited matrilineally, but holders of the same
name are unable to trace their descent from
a common ancestor. People with the same clan-
[582] names formerly did not marry but this prohibi-
tion has fallen away. For the commoners the
clan-name seems to have lost most of its signi-
ficance but it is carefully remembered in the royal
lines and lines in which the rank of a village head-
man is passed down.

643 The present Kawinga and the present Liwonde
551 can trace their descent matrilineally from a com-
175

643 mon ancestress. The first Kawinga and the first
551 Liwonde were maternal brothers and to this day
175 Kawinga and Liwonde call each other "brother".
[601] Nyambi however was a sister's son of an early leader Mkumba who was the father of Nkata, and their clan-name was *asulan*. Nkata therefore called Nyambi "father".[3] Nkata was the first to move into Nyasaland and Mkumba and Nyambi followed afterwards. Later the Nkata name was dropped and an Arabic name Zarafi, corrupted to Jalasi, was substituted. Hence the present Jalasi calls the present Nyambi "father". Kawinga and Liwonde both call Nyambi *alamu*, or brother-in-law, it is said because one of the early Nyambi's married a woman who bore the clan-name of *asulan*.

643 The groups under Kawinga and Nkata entered
175 Nyasaland and gradually expanded until Jalasi,
648 as he became known, dominated the area around Mount Mangoce in the present Fort Johnston District, and Kawinga, safely enaconced on Mount Cikala, dominated most of the area north of this point. Jalasi, Kawinga and Liwonde were heavily defeated by British forces in 1895–6 and driven out of British Territory. Later on they were allowed to return after they had been ordered to surrender and effectively disarmed. When they had returned, the chiefs were virtually ignored and as far as can be ascertained the effect of the British government was to destroy the power of the chiefs and substitute the system of British administration for theirs. Nevertheless, it is apparent from entries in the District Book that even though it were not the official policy, the administrating officers considered it important that the chiefs should maintain some power. Thus when Kawinga III died in August 1905 the District Book records: "There were two claimants to the succession, Kumlomba and Chiwalo. Their claims were really very equal and H. M. Commissioner (April 1906) called in Kumlomba and the most important headmen and decided the succession by their vote." The

[P.146C]

643
551

[1] The Nyambi chieftancy developed from the Nkata line as explained below.

[2] The clan names of the Yao unlike those of most other Central African tribes, appear not to refer to common objects of everyday life. I could not get a translation of *ambaw* and of most other clan-names.

[601] [3] A man calls his father's sister's son *ainsani* (cross-cousin) but since this cross-cousin should in due course succeed to the (man's) father's name, he may also call his cross-cousin "father".

643
175
648

report goes on to say that the newly elected chief Kumlomba "had been mad once and still has a weak looking face and is a weak man. He has no real influence with his people and is ruled by his young men's advice. He means well but does not act on his own ideas sufficiently."[1] This comment shows that even though the Administration may have acted on this occasion for the preservation of peace, to the Yao it seemed to be approving their indigenous institution in appointing the successor. Informants say that when Kawinga IV died in 1913 his successor Chiwalo, who was the unsuccessful claimant of the report in the District Book, was able to succeed to the name against some Yao opposition, because of his influence with the administration.

As early as 1903, only seven years after the last military action was taken against a Yao group, the position of the defeated chiefs in the new political structure was being considered. Thus the Report of the Protectorate 1903–1904 reads: "A somewhat difficult question for consideration is the extent of power which should be allowed to native chiefs. Before British influence was established a chief had unlimited powers of life and death, and was able to keep his people in order. He did so not by kindness, but through fear. At the present day, when chiefs are not allowed to use any of their old methods, the people formerly subject to them often refuse to obey or to take any notice of their directions. The tendency is for the old large communities to be broken up: for the small man to collect a surrounding of friends and go off and build new hamlets in other localities. There are very few chiefs in British Central Africa who are of great assistance to the Magistrate so far as judicial work goes. There are, of course, notable exceptions, but as a rule it is not safe to give any power to native headmen."[2] I feel that the view of chieftainship expressed in this report is erroneous and that the chief was never as powerful over all his subjects as the 1903 administration assumed. Also the break-up of large communities,

643 I feel, was not due to a break-up of the chief's
175 power but rather to a breakdown of domestic
648 slavery and the system of sanctions that lay behind it, thereby freeing slaves who started setting up their own homesteads. It illustrates that the social system was fundamentally disturbed by the changes wrought by British domination as early as 1903.

643 This process continued until the Administration
622 saw fit in 1912 to introduce legislation to prevent
175 further splitting up of communities and to give a certain amount of power to "paid native local
648 authorities . . . who shall be responsible to the District Residents for the good order and administration of their villages or areas." [3] Hence with the passing of the District Administration (Natives) Ordinance 1912, the Administration began to recognize the indigenous political functionaries and to absorb them into the general political machinery of the Territory. In this Ordinance, village headmen were recognized as possessing a certain amount of power over the people who lived in their villages. Amongst the village headmen one was to be recognized as a Principal Village Headman. The Ordinance made it clear that the position of the Principal Village Headman was in no way to be regarded as similar to the old tribal position of chief. Though the Ordinance further warned that persons who were formerly chiefs were not necessarily to be appointed Principal Headmen, it should be noted that many Principal Headmen were in fact such people. Thus, in 1912, the leadership position of certain headmen in the Territory, though always recognized by the Africans themselves before that date, was further officially recognized and they were given specific powers by the British. "Residents were to indicate carefully by their attitude towards, and dealings with, Principal Headmen the fact that they were officially recognized as chiefs in their respective sections and that, as such, they were entitled to the respect and obedience of their people." [4] Nevertheless it was planned to have a structure

[text continues top of p.149 A]

8:Mitchell E-5 (1946-1947) 1949 FT7 Yao FT7
[P.147 C]

643
175
648

[1] Recorded in the District Book at the District Commissioner's Office in Zomba.
[2] Annual Report of the Territory 1903-4 quoted in S. S. Mowatt, *Handbook of Nyasaland*, (London: 1932), p. 128. [3] S. S. Mowatt (1932). [4] S. S. Mowatt (1932), p. 130.

8:Mitchell E-5 (1946-1947) 1949 FT7 Yao FT7

[P.148]

182
643
131

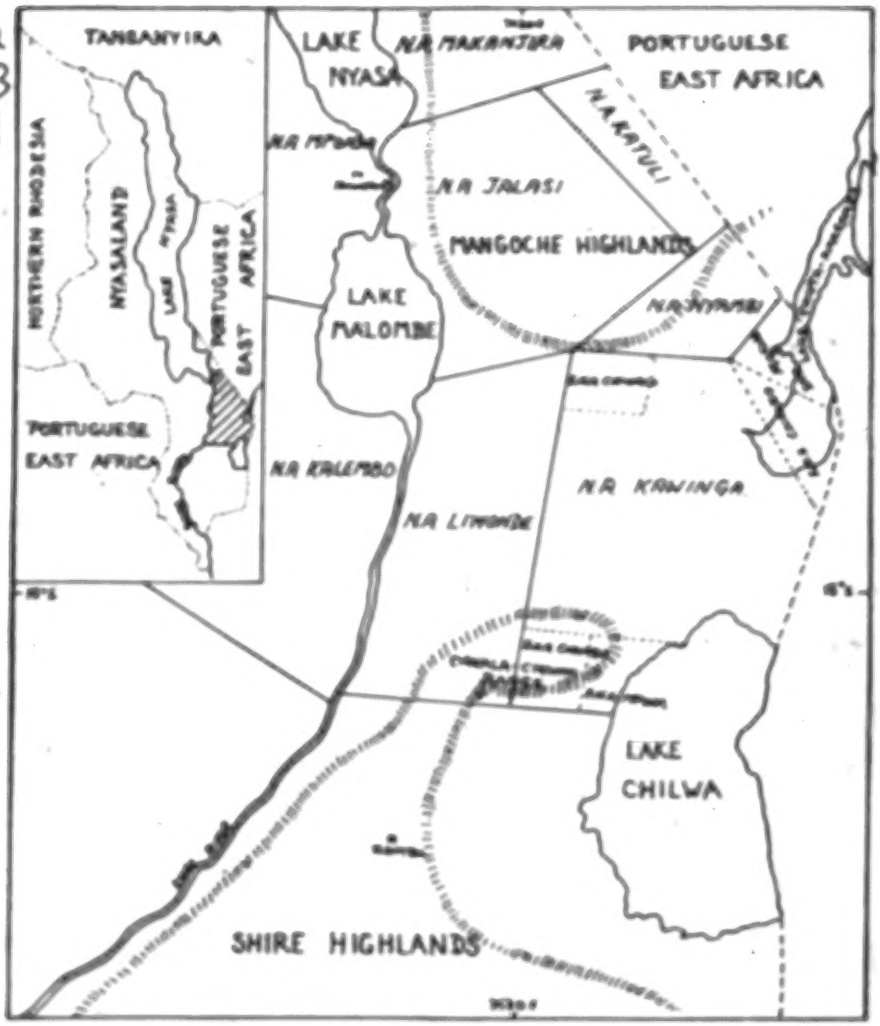

MAP TO SHOW APPROXIMATE POSITION OF CHIEFS

This map is diagrammatic. In other words it shows the relative position of the chiefs and does not pretend to represent the boundaries faithfully.

643 in which the District Commissioner would be
622 the real authority with the Principal Headmen
175 as his subordinates, to carry out certain well-
648 defined duties under his instructions. The Principal Headmen were expected to assist in the concentration of the huts in accordance with the new regulations concerning village headmen and the villages they controlled. Measures for the sanitation in the villages, sweeping and cleaning of villages, the construction of refuse-pits and latrines, were included in the Ordinance and the responsibility for this devolved upon the headmen. Village headmen were also expected to report crimes, abnormal illnesses and deaths, and so on. A clause specifically stated that no power to hear

[TEXT CONTINUES TOP OF P. 149B]

IV. THE PRESENT POSITION

643 In order to illustrate the structure of the political
175 divisions with which we are dealing, I shall
648 outline the make-up of the three districts under the Native Authorities Kawinga, Liwonde and
131 Nyambi (see accompanying map).

It will be recalled that Kawinga and Liwonde trace their descent from a single ancestress three generations back from the present Kawinga and five generations back from the present Liwonde. The groups under the leadership of these two brothers Liwonde I and Kawinga I, entered Nyasaland in the early part of the nineteenth century and after various campaigns in Mount Mangoche area migrated across the Shire River at Mvera and took up their position on Kungwa hill. Here the second Kawinga died. Shortly after this the groups were displaced by Ngoni raids and they recrossed the Shire River and moved southwards to displace another Yao chief, Malemia, from Mount Cikala (near Zomba), which stronghold Kawinga held until they were displaced by the British attacks in 1895. Liwonde at first occupied the neighbouring range Caoni but soon moved down to the Shire River. He too was displaced by British attacks and fled with Ka-

[TEXT CONTINUES MIDDLE OF P.149B]

643 and determine petty native cases was conferred
622 upon the headmen, though the District Commis-
175 sioner was supposed to seek their advice when
648 necessary.

Therefore, from the time of conquest a pattern of superordination of the Whites and subordination of the Africans was established and the indigenous political system remained largely without official recognition until the Native Authorities Ordinance was passed in 1933. The major change wrought by this Ordinance was that Native Courts were planned and instituted by the Native Courts Ordinance of the same year. At the same time a Native Treasury was founded.

IV. The Present POSITION

643 wings to Portuguese East Africa. They were
175 allowed to return later and they took up their
648 positions in an area roughly outlined in the early
131 part of this paper. At the same time, owing to military action by the Portuguese a certain number of refugees were crossing the border into the Lake Chuta area of Nyasaland.

TABLE 1

Demographic Composition of Political Areas[1]

162
643
631
[563]

Sub. Areas	*Tot. Pop.*	*Admin. Vills.*	*Av. Pop. of Admin. Vills.*	*Tribal Composition*			
				Yao	Ngoni	Nyanja	Ngoni
				%	%	%	%
N.A. Kawinga (Yao)	23,087	311	74	51	37	10	2
S.N.A. Cambu (Yao)	5,119	61	84	72	20	7	1
S.N.A. Mpona (Yao)	4,411	60	74	49	19	32	—
S.N.A. Chiwalo (Yao)	2,202	19	116	80	15	5	—
S.N.A. Ngokwe (Mpotola)	2,868	21	136	16	43	40	1
S.N.A. Chikwere (Mpotola)	7,102	49	145	28	56	16	—
N.A. Liwonde (Yao)[2]	12,716	106	120	75	20	5	—
N.A. Nyambi (Yao)[2]	7,335	63[3]	116	73	27	—	—

8:Mitchell E-5 (1946-1947) 1949 FT7 Yao FT7
[P. 149 C]

643
162
631

[1] Abstracted from crude returns of 1945 census. District Commissioner's Offices at Zomba and Fort Johnston.
[2] Census data for a newly created S.N.A., Shaw, not recorded separately.
[3] Approximation only. Number of Administrative villages not ascertained.
[4] N.A.—Native Authority; S.N.A.—Subordinate Native Authority.

162
643
631

	Total Pop.	Area sq. m.	Density per sq. m.
Kawinga	44,789	682	65·5
Liwonde	12,716	396	32·0
Nyambi	7,335	140	52·5

The Table I summarizes the present demographic position in the areas. The greater part of the area under study is divided between the Native Authorities Kawinga and Liwonde who call each other "brother". Kawinga as well as being a Native Authority with jurisdiction over five subordinate native authorities, is a chief over a certain number of villages in the same way as his subordinate native authorities are. These subordinate native authorities under Kawinga are :

631 1. *S.N.A. Cambu*, who is a matrilineal descendant of the first Kawinga's son and who still calls the present Kawinga "father", is in charge of an area along the south side of Mount Cikala ;

2. *S.N.A. Mpasa* is a matrilineal descendant of the son of the first Liwonde and therefore calls both Kawinga and Liwonde "father" (*atati*). His area lies near Lake Chilwa and contains a high proportion of the original Nyanja peoples of the area ;

3. *S.N.A. Ciwalo's* area adjoins that of N. A. Nyambi at the north of Kawinga's sub-district. Ciwalo was a sister's son to one of the previous Kawinga's and his mother's brother had succeeded, illegally in the opinion of some, to the name of Kawinga V (see p. 147). Ciwalo succeeded to his mother's brother's name that he had before he took the name of Kawinga V. The present Kawinga VI who was known as Mbogo before he succeeded must call Ciwalo "my elder brother" (*akulumunga*) ;

4. *S.N.A. Ngokwe* and 5. *S.N.A. Cikuso* are, as the Table shows, not Yao but Mpotola who are a people from Portuguese East Africa. The Mpotola have lost whatever language they had in the past and now speak Yao and as far as I could see follow Yao usage and custom. The areas under the jurisdiction of these S.N.A's lie along the north-east boundary of Kawinga's area adjoining the Portuguese territory. The Table also shows

631 that there is a relatively low proportion of Yao in the area whereas the Nguru are well represented. The term Nguru is applied by the Yao to any person from a certain part of Portuguese East Africa. It is indiscriminately applied to a number of tribes, though mostly to the Lomwe who form a congeries of related tribes.

Liwonde sub-district lies to the west of that of Kawinga and it has as its western boundary the Shire River. There is one S.N.A. in the area, Stora, appointed in 1940, but I could not visit him and there is no census information on this group. This new S.N.A. is a sister's son to the present Liwonde and actually stands in the direct line of succession to the name of Liwonde.

Nyambi sub-district is now a part of Fort Johnston District. It lies to the north of Kawinga's area and is small. The relationship of Nyambi to Liwonde and Kawinga has been noted above (p. 147). At the same time it was noted that Nyambi calls Jalasi "my child" (*mwanangu*). Jalasi, who had been a powerful leader, was recognized by the Administration as a superior chief in the area. The Nyambi who was living at the time resented the activities of a person who was genealogically inferior to him and therefore moved from the area he occupied then, to the present position which was under Kawinga at the time (about 1914). When the Native Authorities Ordinance was introduced Nyambi was made an N.A. independently of Kawinga. Recently (1947) the subdistrict under his jurisdiction was transferred from Zomba District Administration to Fort Johnston, largely at the request of the present Nyambi who said that he preferred to be with his own relatives (Jalasi's family).

563 The Table I shows that in some areas there is a considerable proportion of non-Yao under Yao chiefs. The reason for this is that the Yao came into these areas as conquerors, either eliminating the indigenous Nyanja or allowing them to remain there in a subordinate position. Later, from the turn of the century until about 1930, there was a gradual infiltration of Nguru peoples into Nyasaland from Portuguese East Africa. The presence of the different tribal

563 groups presents a problem to be considered but for the main purposes of this paper a brief comment is sufficient.

The Nyanja people who were allowed to remain in the areas, continued to live in their village communities in much the same way as the Yao did. In fact the Nyanja and the Nguru are so similar in culture to the Yao, that it was possible for them to fit into the Yao social structure fairly easily. For example, in Mposa's area Mbande and Mbeta are recognized by the local Yao sub-chief as important personages since they were the indigenous chiefs in the area before the Yao came in as invaders. Both, for example, have adopted [554] the Yao practice of wearing a red band round the head to indicate rank. Both have the right to conduct the Yao indigenous initiation ceremonies. At one meeting I attended Mbande was allowed [554] to sit in a chair while the only other person to do so was Mposa himself. This is a mark of honour since no commoner is allowed to sit in a chair in the presence of the chief.

In the same way the Nguru immigrants have come in small groups of matrilineal kin and have settled either in hamlets alone or set up small hamlets in close vicinity to kinsmen. Their headmen in turn have been absorbed into the general political structure though they have their own language and distinguishing cultural traits. Thus some Nguru initiate their boys according to their own *cidototo*, though others will allow their boys

[Text continues top of P. 151B]

V. THE POLITICAL STRUCTURE

642 177 The accompanying diagram is designed to summarize the main types of interaction that take place in the political structure of the three areas. Interaction between the social personalities in the political structure can be said to take place in reference to certain sets of values. One set of values is that which the Yao recognize and believe to belong to the White people. Another set of values they recognize and subscribe to as their own. A chief may interact with a village headman because he has broken a regulation which

[Text continues bottom of P. 151B]

563 to be initiated according to the Yao custom (*lupanda*). In general, the Nguru headmen are village headmen in the same way as the Yao are and they follow the same pattern in political behaviour.

563 At the moment, throughout the areas, the various tribal groups live in kinship clusters so 621 that under one Yao administrative headman there may be two or three unrelated Yao kin-groups and possibly one or two Nguru groups living quite separately. Though the population in the area as a whole is mixed, usually the village groups are tribally homogeneous. So far little inter-marriage has taken place. I shall not here analyse this situation, though it is politically pregnant. In many ways the Nguru immigrants [771] are more progressive than the Yao. Most Yao in this area are professed Moslems and do not attend the local schools which are Christian. However, the missions have been more successful among the Nguru and they are becoming more educated and advanced. A good proportion of the Government posts in the area is filled by Nguru for this reason. This is most significant in the context of the general situation as will become apparent in the description below. For the rest of the paper I shall consider the political structure as I see it, in terms of the social personalities in the structure, and the presence of these non-Yao groups is implicit in the rest of this analysis.

V. The Political STRUCTURE

648 642 the Administration has persuaded the chief to 177 pass and the full significance of which lies in a system of European values. These systems of values are foreign to each other in many features. Opposition between the two groups, White and Black, must arise if their behaviour is affected by different sets of values. The Yao, for example, believe that most deaths are caused by sorcery and claim the right to take punitive measures against the sorcerers. The Whites do not believe in this and prevent punitive action against people

8:Mitchell E-5 (1946-1947) 1949 FT7 Yao FT7

[P.152]

DIAGRAM

SUMMARY OF POLITICAL INTERACTION IN YAO AREAS

648
642
177

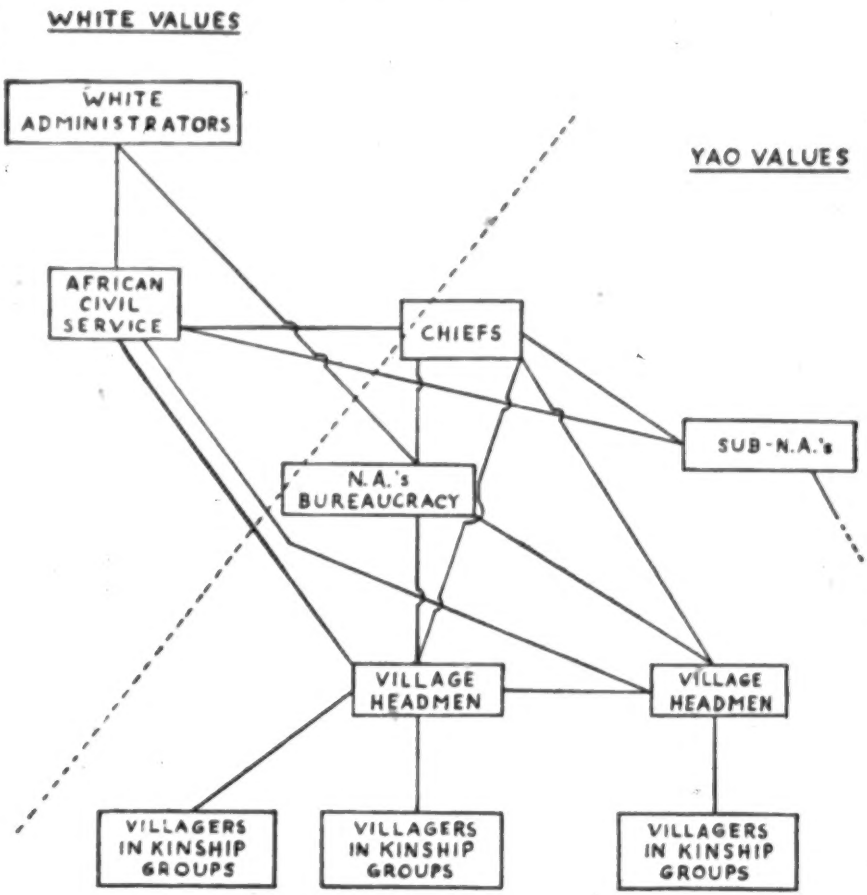

(Only the main lines of interaction are included in this diagram.)

648
642 who are, to them, innocent. The diagram has been divided obliquely to represent these two
177 systems or fields of values. The division of the diagram into two parts depicts a major rift in local political relationships. While some political relationships, as say between village headmen, do not directly manifest this cleavage, in most, as say the chief with his subjects, though the Whites are not present in person, they are there in the context of the interaction. This will become evident as the analysis proceeds, but at this point it is sufficient to observe that the Whites and the White system of values are an integral part of the modern Yao political organization.

642 In addition to this, there is a hierarchy of status roughly conforming to the placing of the social
177 personalities in the diagram, i.e., the White
534 Administrator is of higher status than the African Civil Service which is roughly on the same level
648 as the chiefs, but both are on a higher status than the Native Authority's clerk and officials are. The lines represent the main direction of interaction.

648 1. *The White Administrator and the African Civil Service*

563 By the White Administrator I mean the District Commissioners, Agricultural Officers and other Government officials who come into contact with the African populations, particularly in the rural areas. The social distance between a White person in general and the Africans is much larger than that between, say, an African chief and his meanest subject. Social interaction on an intimate basis cannot take place between chief and Administrator mainly because their relationship is dominated by the pattern of all South African territories, where White does not interact intimately with Black. I have already stated that not many Europeans come into the area. Those Whites that do come into the area are immediately accorded the status of an Administrative Officer and are apt to be thought of as such, though they may not be so. The Yao clearly recognizes that the Labour Recruiter is a different sort of person from the Missionary and both differ from District Commissioners, but

648 nevertheless the type of behaviour which is normal
563 between Labour Recruiter and African is dictated by the pattern of behaviour of African to Administrator. The Yao find it extremely difficult to separate out their attitudes to these different types of social personalities and the main reason is that they tend to categorize all White people into a general class "Whites" of whom the most common representative to them is the Adiministrator.

647 It is, however, impossible to consider the Administrator without reference to the African
648 Civil Service. I am using this phrase to mean those Africans who are in constant and direct interaction with the Administrator. I include the clerks, interpreters, messengers, policemen, and other intermediaries between the Administrator himself and the people. Probably of major importance is the interpreter who speaks directly to the people on behalf of the Administrator. In Southern Nyasaland the official language is Nyanja and officials are expected to learn it for their official business. Some of the Yao men
[191] in the area under study can understand and speak Nyanja but some men cannot and certainly most women cannot do so. Therefore, the tendency is for the Administrators to make use of interpreters in dealings with the Yao and other peoples in the area. The Administrators do not interact directly with various social personalities but do so rather through either their own civil service or through the N.A.'s Bureaucracy who, being educated, are able to speak and understand the official language. The Administrators are in direct interaction with their own Civil Service and only in indirect interaction with the other social personalities in the political structure.

The African Civil Service stands for a set of White values and for this reason is placed in the "Whites Values" part of the diagram.[7] The African Civil servant represents the District Commissioner or Agricultural Officer to the tribesman. The Tax Clerk, while he is collecting taxes, is part of the system of the Administrator. The Agricultural Capitao (African official) represents the Agricultural Officer to the villager when he instructs him in the building of contour ridges.

7 [See p.152 — Analyst.]

647 Therefore the African Civil Service has behind
648 it the very powerful set of sanctions of the Administration, both legal and eventually military, so that it is possible for a young Agricultural Demonstrator to resist a chief and be impertinent to him. The Demonstrator acting thus knows that he has the force of the White Administration behind him. He knows that he is able to report to the Agricultural Officer if the chief refuses to carry out instructions. The African Civil Service too, are outside the reach of the chief's power of punishment save where sanctioned by law. It was possible for a certain clerk of the District Commissioner while on tour, to sleep with the divorced wife of the chief—a thing which no villager would have dared to do for fear of the wrath of the chief. The African Civil Service is also the correct channel of approach to an Administrator. Should a villager wish to see the District Commissioner he must first approach the messengers and interpreters before they are taken to the District Commissioner. The strong position of the African Civil Service in the situation is quite obvious.

648 The Administrator, through the mediation of his African Civil Service, interacts with the chief, the village headman, and the villager in different situations. Probably in all, the greater part of the Administrator's rule of tribal Africans is spent in interaction with the chief. This interaction is occasioned by their respective positions in the political structure. The Administrator may discuss with the chief such things as the Treasury, the general food situation, the court cases, some unsatisfactory feature of the chief's administration. The Administrator may interact with village headmen in the same sort of way over specific points of common interest. The Agricultural Officer may reprove the village headman for the existence of some mound-gardens in some of the village gardens, the District Commissioner upbraid him on the general state of disrepair in the village. Finally, the villager may approach the

8:Mitchell E-5 (1946-1947) 1949
[P 1548] FT7 Yao FT7

648 District Commissioner on specific points. These points refer to some particular work of the Administration of which the District Commissioner is a representative. A villager may make enquiries about army gratuities, about tax exemption, about the administration of estates of relatives who have died in Southern Rhodesia, etc. In general we may say that the interaction between the people on one hand and the Administration on the other takes place largely in terms of an overlapping field of interest, which the tribesmen see as a part of the White system of values but to which they do not fully subscribe.

2. *The Chiefs and their Bureaucracies*

643 The chiefs and their bureaucracies stand in
645 a peculiar position in the political structure. They are, as it were, the bridge between the
648 indigenous political machinery activated by a system of indigenous values, subscribed to by chief and commoner alike, and the White Administration on the other hand. To the people, the chief and his bureaucracy represent the White Administration to them since it is through this set of institutions that the regulations are administered. The N.A.'s bureaucracy collects the poll taxes,[1] dogs, guns, canoes, etc., supervises the construction of latrines, etc., and the chief punishes the people for breaches of regulations (not tax defaulters) which to the tribesmen are part of the White Administration. At the same time the chief is their representative to the District Commissioner and when the District Commissioner speaks to the chief he is in effect speaking to the people. From the point of view of the Administration he is in exactly the same interjacent position: he is both their representative to the people and the people's representative to the Administration. Accordingly the oblique line in the diagram passes through the rectangles marked 'chief' and N.A.'s Bureaucracy'.

The chief has lost many of the attributes of status that he had in the early days. No longer

8:Mitchell E-5 (1946-1947) 1949 FT7 Yao FT7
[P.154C]

643
645

[1] Actually the poll taxes are collected by a Tax clerk who is stationed at the N. A. court-house but is remunerated from the Central Treasury. He is therefore really a member of the African Civil Service but since he lives at the chief's court and interacts with the chief, is looked upon by the villagers as part of the N.A.'s bureaucracy, I include him in this paper as part of the chief's staff.

643 does he monopolize the trade to the coast. To-
645 day the goods are brought in by Indian traders and are bought for cash by the African tobacco
648 growers and the returned labour migrants. He can no longer use his slaves to increase his wealth by capturing yet other slaves. Nowadays his salary is insufficient for his own requirements and he can no longer make the gifts that he used to, to the village headmen and councillors. Councillors (i.e. the *ndusa* not necessarily officially recognized by the Administration) complain that though they are not paid they nevertheless have to do much of the work that the District Commissioner expects the chief to do. The chief himself is generally too poor to pay them though some do in fact privately remunerate certain of their unrecognized councillors. The
643 chief is still expected to give a burial cloth when an important headman dies, and to make
648 a gift to a headman when he succeeds to a name,
651 but his tribute of food and ivory has ceased. The people look upon the taxes they pay to the Administration and the licences that are paid to the chief's court as substitute for the chief's tribute. One informant explained that no longer is it necessary to send a pot of beer to the chief when beer is brewed, because nowadays a sixpenny licence must be taken out from the court for each brew for sale. He looked upon the licence (designed by the Administration as a measure to counter excessive brewing and paid into the Native Treasury and not to the chief) as a modern substitute.

643 Nevertheless, it appears that the chiefs do manage to live at a higher standard than most of their subjects. They usually appear to be dressed more finely and seem to have larger wardrobes. Most have brick dwelling houses and rather more furniture than the average commoner. Nearly all have shot-guns and some have rifles. This is largely possible because the salaries are regularly paid even if they are low, and because many of the former obligations have fallen away. No longer do the chiefs entertain on so lavish a scale.

643 The chiefs are also able more successfully to press their claims to certain gifts from visiting Europeans, particularly in articles which are difficult for Africans to obtain—for example, cartridges. One chief uses his rifle to shoot game and the meat is peddled round the villages by one of his servants. Some are also able to make use of the services of remand prisoners and other villagers in their gardens, thus growing more food and sometimes more of cash crops as tobacco. Other chiefs are able to use their salaries as capital and employ labourers to cultivate tobacco and other cash crops. A few returned labour migrants make small gift payments to the chief.

643 692 The main duty of the chief is the arbitration in disputes. The Native Courts Ordinance established two classes of native courts, called respectively A and B courts, which differ in their powers. Under the same Ordinance court assessors who are remunerated from Native Treasury funds, were appointed.

693 647 The Native Authority's bureaucracy is made up of a large assortment of functionaries and officials, including in the largest court, (Kawinga's), 6 court assessors, 1 court clerk, 1 assistant court clerk, 1 community worker, 1 forest guard, 1 agricultural demonstrator, 1 sanitary inspector, 9 court messengers, 2 caretakers, 4 garetta men,[1] 1 market clerk, 1 market sweeper. Other Native Authorities also have well inspectors. These people are remunerated from the Native Treasury and the most highly paid is usually the court clerk. I do not intend to deal in detail with the duties of each but I shall deal with the more important of them and make some general remarks about their position in the structure.

693 645 The court assessors are supposed to assist in arbitrating cases. Under the old system there were both councillors, *nduna*, and court assessors, *mapungu*, (see p. 144). There is not sufficient provision for the remuneration of both councillors and court assessors in the modern system and there has been a general alteration in their functions. Some of the old councillors are no longer

8:Mitchell E-5 (1946-1947) 1949 FT7 Yao FT7
[P.155C]

647
493 [1] A "gareta" was a one-wheeled conveyance in which an Administrator or chief was wheeled around while on tours. Nowadays garetas are hardly ever used and the men who used to be employed to push them are used mainly as messengers.

693 paid by the chief but still advise him, and retain
645 much of the prestige due to their rank, which is inherited. Others have been incorporated as court assessors though they may not actually take part in the duties. Some now combine both sets of duties and function both as councillors and court assessors. Some of the duties of both sets of officials, however, have been taken over by the court clerk and other court functionaries. Although the position of court assessor was part of the old tribal structure, modern court assessors see themselves as occupying a position in a structure largely of White fashioning. I once heard a court assessor when conducting an enquiry into a case of adultery, cut short the prolixity of a witness saying: "None of these long stories. We are conducting this case according to the custom of the Whites."

More illuminating still is the position that the court clerks occupy in the modern structure. [212] They are differentiated from the vast majority of the population because they are literate. All of them have been educated, usually in a mission [563] school. A high proportion of them are Nguru because more Nguru are Christian (hence educated) than Yao (see p. 151). Because he can read and write, the chief court clerk is the medium through which the chief expresses himself in writing and the medium through which he gets written information from the Administrators and others. The court clerk is therefore in a unique position of knowing all the business that comes into the chief's hand by letter. He, of course, must also write the replies so that he has a very good knowledge of what is going on in the territory. In addition, because of his education and knowledge of the ways of the White people the court clerk often makes a better councillor than the uneducated and naive traditional councillor does. Therefore in certain matters the court clerk, rather than the councillor, is the chief's most important adviser.

693 The various other officials have different
647 functions to perform, frequently of a semi-technical nature. There are sanitary inspectors, well inspectors, etc. The court sergeant who is present at the cases now performs many of the

693
647 duties which the court assessor used to in past days. The correct channel of approach to the chief now is through the court sergeant.

In most situations where the chief's orders are to be carried out, the various members of his bureaucracy execute them. For example, when the chief wants some duty to be performed by the villagers, it is the court sergeant or messenger who sees to it. The messengers carry out the instructions and wishes of the chief to all parts of his territory. To the villagers, therefore, the N.A.'s bureaucracy represent the chief when acting as his agent but they also represent the White Administration because much of their interaction with the villagers is in terms of some regulations based upon White values. The court clerk who apprehends a villager and charges him with being in possession of an unlicensed dog is acting, in the eyes of the villager, not so much as an agent of the chief, but rather as an agent of the chief representing the Administration. The sanitary inspector may explain to the man who has been charged with having no latrine, "It is the law that you should have one", and by this he means the White law.

3. *The Position of the Subordinate Native Authorities*

643 I have not yet considered the position of the
648 S.N.A.'s in the structure. In the diagram[3] they are represented as a separate interactional system. The reason why they have been represented thus, is because the S.N.A.'s regard themselves as autonomous units and in no way an integral part of the main interactional system under a chief. Each S.N.A. has his own sub-court and a small bureaucracy of his own. He sets up a replica of the situation under the chief. Each S.N.A. has the insignia of rank that the chief has: he is given the same greeting; wears the red band around his head; holds initiation ceremonies, etc. Each S.N.A. has the duty of making a sacrifice to the ancestors before and after the rains. A recent theft of a sacrificial cloth hung on a tree-shrine in a S.N.A.'s area was held to endanger the rainfall in that area alone. The chief in the area makes use of his position in the structure in relation to the Administration to bring pressure

3 [See p. 152 — Analyst.]

643 to bear on his sub-chiefs. For example, when
648 one sub-chief mishandled a prisoner, the chief did not feel himself to be in a position to reprimand the sub-chief. He reported the matter to the District Commissioner. Another had expressed displeasure at the conviviality of the sub-chief with an Nguru man. He had given instructions that the one Nguru with whom the sub-chief was on intimate terms, should be beaten if found together with the sub-chief again. The sub-chief merely countermanded the ruling and nothing further was done about it. When one of the chiefs was to be given a medal by the Governor it was only with great difficulty that the sub-chiefs could be induced to attend the ceremony. One of the sub-chiefs said : "Why should my feet get sore walking to his capital ? He's getting the medal, not me". The Native Authority of his own account has not sufficient authority to reprimand a S.N.A. and where this must be done he must call in the District Commissioner to do it.

4. *The Village Headmen and the Villagers*

622 A District Commissioner once referred to the village headman as "the lance-corporal of the political system—doing all the work and getting all the kicks". This description is an illuminating one. The population in the area is distributed in hamlets of mainly matrilineal kinsmen usually composed of a man and his female matrilineal relatives and spouses (see p. 142). The male leader of this group I call a village headman but this should not be confused with the social personality here called the Administrative village headman. For purposes of the Administration, villages and hamlets are grouped under officially recognised and remunerated village headmen. Administrative village headmen usually have some local standing. Some have the right to wear the red band which distinguishes rank, some have the right to conduct initiation ceremonies for both boys and girls, they are all given the greeting correct for people of some rank, they are referred to by a term which signifies both the chief and the village headman (**[illegible]**).

The administrative village headman has certain duties which he must perform in respect of his

622 Administrative village. The N.A.'s bureaucracy considers him responsible for the collection of the taxes though, of course, the legal responsibility rests on the tax-payer. The village headman is generally responsible for the various regulations that the villagers must carry out. In practice the Administrative village headman may be in charge of a single kin-group and thus have a certain amount of control over the villagers because of his kinship with them. More frequently, however, the Administrative village headman is also in charge of a number of other hamlets, sometimes completely unrelated to him but who happen to have been assigned to his jurisdiction. He then delegates the responsibilities to the headmen in charge of the hamlets.

622 554 The Yao judge rank among the village headmen largely in terms of historical antecedents and by the number of dependants that a village headman has. While a certain village headman may be ranked fairly highly in the status system because his ancestors were closely associated with the ancestors of the chief, he may not now have many villagers around him. A newcomer to the area however, can only become notable by acquiring sufficient followers to make him a man of considerable power. Associated with rank are the various insignia that I have mentioned, i.e. the right to hold initiation ceremonies, the right to wear a red band round the head, etc. The competition among village headmen therefore, is phrased largely in terms of competition for these particular insignia of rank. They strive to be recognized as Administrative village headmen—"to have a book" as they say, since this at once means that they will receive a remuneration for work which they would have to do anyway, and it also means that they would be recognized as village headmen in the eyes of the White Administration. Village headmen also compete with each other to have the right to hold initiation ceremonies and use the threat to move out of the chief's area to bring pressure to bear on him to force him to grant the right.

692 While domestic quarrels are usually settled by the kin-group leaders and by the husband's and wife's parties conferring together, differences out-

692 side the kin-group are usually settled by the arbitration of a local village headman or the chief. What decides whether a case is tried by a village headman or a chief seems to depend largely on the seriousness of the case and hence the amount of compensation that it involves. A quarrel between a village headman and his heir for example was settled by a local village headman, the compensation in this case being a matter of 2/- and a pot of beer. More serious cases are taken to the chief for arbitration and whether the cases are then tried in the court or not depends on the type of case. Certain cases are known to conflict with the system of values of the Whites. They are tried by the same court assessors and arbitrated in by the same chief who preside in the context of the Native Courts Ordinance, but they are handled by an entirely different procedure. Thus, a case involving the accusation of sorcery or the breach of a taboo leading to death and compensation claims is arbitrated on by the chief acting in terms of the indigenous value system. These cases take place outside the court-house, usually at the chief's hut, and are not recorded as a court case at all. The chief awards compensation in the same way but it is not recorded as in ordinary court cases.

Cases which are known not to conflict with White values are tried in the court-house if compensation of some value is involved. If we exclude from consideration the cases following a breach of the N.A.'s regulations we find that the recorded court cases are almost entirely about compensation for adultery, petty theft and assaults. How the chief and court assessor function as social personalities acting in reference to a set

[TEXT CONTINUES TOP OF P.158B]

VI. GENERAL SUMMARY

642 177 I have tried to describe the political structure of the Yao in Liwonde, Kawinga and Nyumbi sub-areas in terms of the interaction of social personalities in a structure briefly summarised in the diagram. The aspect of the social personality perceivable in set situations of social interaction

[TEXT CONTINUES BOTTOM OF P.158B]

692 of White values which coincide with their own.

692 Informants say that the position of the village
643 headman in contrast with that of the chief is
622 getting progressively weaker. They maintain that cases once tried by the village headman are now taken to the chief's court. Whether this is true or not is difficult to ascertain. The fact that there is some sanction on the guilty party to settle the compensation if he is tried in the chief's court, probably pays a part. The compensation awarded is recorded in the Court Case book and the chief is empowered to keep a man under remand until it is paid. The chief sometimes supports the village headman against recalcitrant subjects. A man once refused to pay a compensation awarded against him by a village headman. The village headman referred the case to the chief who said to the man: "As you have disobeyed the order of the village headman it means that you have insulted me, the District Commissioner and the Governor". But in general there is a tendency for the central authority to be strengthened and the chief emphasizes his relationships to the White Administration in order to consolidate his position of dominance over his headmen. At a succession ceremony of a village headman the chief who had supported an unpopular candidate said: "This man has been chosen by me and the Governor agrees with me". Clearly in this insecure situation the chief saw himself against his subjects, and as part of the White Administration. He uses his power in this political situation to establish a dominance over the headmen, that he could never have established before the White men came (see p. 144).

VI. General
SUMMARY

642 depends on the field of values in which the inter-
177 action is taking place. To illustrate this with a simple example, when the court messenger exacted a levy of 1*d.* from each garden-owner in the area where the sacrificial cloth had been stolen from the tree-shrine, they saw in him a

642 177 representative of the chief, acting as he was in terms of a system of values indigenous to the Yao. If during the same trip he informed the villagers that the village roads should be cleaned, to the people he would appear as a representative of the chief who is representative of the Administrator and is acting according to a value held by the Whites and embodied in a regulation governing the cleaning of village roads. Two sets of values intermingle in daily life and social personalities are seen first in this guise and then in that depending on the particular interactional situation. Thus the chief, when he is addressing villagers and village headmen, sees himself opposed to them and shows himself to the people as a representative of the White system of values and emphasizes his bonds with the District Commissioner and the Governor. Talking to the Agricultural Officer he sees himself opposed to the White system of values and opposes contour ridging, saying that unlike the traditional system of agriculture it encourages white ants in the gardens.

642 186 At the same time the White value system, symbolized to the Africans mainly by the Administration, is becoming an integrating force in their life. The otherness of the White system of values emphasizes the unity of their own. Formerly hostile, chiefs are now living at peace under the

8:Mitchell E-5 (1946-1947) 1949
[P.159 B] FT7 Yao FT7

642
186

Administration. Africans are becoming increasingly aware of their position in the British Empire and in the world in general. The trips of labour migrants to South Africa and Southern Rhodesia have emphasized this since Yao from formerly hostile groups, Nguru and Nyanja alike, were all classified as "Nyasa boys" and in the situation of being amongst vastly different tribes at these labour centres they have begun to see themselves as a united people. Also during the war there was a high recruitment rate in Nyasaland and since the 1st and 2nd KAR are recruited from Nyasaland, this heightened the feeling of belonging to a new political entity—Nyasaland. The new feeling of unity of Nyasaland people is felt most strongly by the younger people who have been out to work and who have been in the army. This feeling is also strong among the more educatrd who now read African newspapers from Southern Rhodesia and South Africa in which columns are set aside for "Nyasaland News". Symptomatic of this is the development of associations of a semi-political nature especially among the more educated people—the clerks and the teachers—organizations which cut right across the old tribal barriers, and which are serving to integrate the whole of the African population into a united political body.

8:Mitchell E-5 (1946-1947) 1949
FT7 Tao FT7
[P.159C]

BIBLIOGRAPHY

113 1. DUFF MACDONALD, *Africana or The Heart of Heathen Africa*, (London: Simpkins, 1882). 2 volumes.
2. M. FORTES and E. E. EVANS-PRITCHARD, *African Political Systems*, (London: Oxford University Press, 1940).
3. S. S. MURRAY, *Handbook of Nyasaland*, (London: Crown Agents 1932).

9:Lawson Y-5 (ca. 1940) 1949 FT7 Yao FT7

AFRICAN STUDIES

[Title Page]

EDITED BY

C. M. DOKE, J. LEWIN AND M. D. W. JEFFREYS

VOLUME 8

1949

(being the continuation of *Bantu Studies*, which ended with Vol. XV, 1941)

JOHANNESBURG
WITWATERSRAND UNIVERSITY PRESS

9:Lawson Y-5 (ca. 1940) 1949 FT7 Yao FT7

[P. 180A]

AN OUTLINE OF THE RELATIONSHIP SYSTEM OF THE NYANJA AND YAO TRIBES IN SOUTH NYASALAND

AUDREY LAWSON

9:Lawson Y-5 (ca.1940)1949 FT7 Yao FT7
MARAVI FR4
[P.180B]

Acknowledgements are due to many African friends who have freely given me information, and especially to Mr. Bennett Malekekebu.

Y M 101 131 M [197]

THE present Bantu population of the Shiré Highlands in South Nyasaland consists of four major groups :

1. The Nyanja tribe, the country's earliest known inhabitants, whose language is closely allied to that of the Sena and Tette people on the Zambesi and the Senga on the Loangwa, but whose origin is uncertain. In 1858 Livingstone found various branches of this tribe settled throughout South Nyasaland.

Y [175]

2. The Yao tribe, numbers of whom between 1860 and 1870 were driven southwards from their home in Portuguese East Africa by the neighbouring Amakua 'Walolo. These fugitive Yao fell upon the unwarlike Nyanja, conquered and subjugated their chiefs, and finally settling among them, intermarried to a certain extent.

3. A sprinkling of Ngoni, that branch of the Zulu whose flight from Chaka, wanderings in East Africa and ultimate settlement in Nyasaland and Portuguese East Africa, are familiar history. In the Shiré Highlands Ngoni are found only in small scattered groups, for their real home is the "Angoni Highlands" of central Nyasaland.

4. Recent immigrants from various tribes in Moçambique, given by Nyanja and Yao the indiscriminate name of "Lomwe", (i.e., possibly, "people from Lomwe Hill") or more rudely, "Nguru", (i.e. "people who speak indistinctly, like drunkards").

Y M [174] [131] 101

This study was made in the district around Zomba and deals exclusively with the Nyanja and Yao tribes, who there predominate

9:Lawson Y-5 (ca.1940)1949 FT7 Yao FT7
MARAVI FR4

161 and Yao tribes, who there predominate. These
[174] peoples seem to have come from different parts
[197] of the continent. Their languages, despite a
common Bantu descent and much recent borrowing, remain as distinct as possible and are obviously not modern dialects of one more primi-
[177] tive tongue ; their original social structures must, however, have been similar enough to attract them to each other, for they have so intermarried and their customs so fused, that one can now scarcely distinguish their ways of life and village
101 organization. Indeed, while homesteads of appa-
619 rently pure Nyanja and Yao still predominate, every considerable district contains members of both tribes, with some people, at least, of mixed descent ; moreover, and although one perceive a difference of character and manners, and trace it to the influence of Mohammedanism on the
[601] Yaos, one may well be unconsciously exaggerating. This account of relationship terms, (with brief reference to underlying social structure), must be taken, therefore, to cover the fusion of two once-separate tribes, and Nyanja and Yao equivalents must—unless otherwise stated—be
[177] understood as identical in meaning. In fact, Nyanja often prefer Yao terms to their own.

How far can one isolate the Nyanja-Yao social structure in order to study it ? Ngoni
177 immigrants in this district are few, and their
602 original patrilineal social system has largely succumbed to the customs of these earlier comers. The matrilineal system of the still more recent and numerous Lomwe immigrants is, I believe, (though my evidence is fragmentary), exerting a considerable influence on the somewhat dissimilar but also matrilineal Nyanja and Yao.

9:Lawson Y-5 (ca.1940)1949 FT7 Yao FT7
[P.181A] MARAVI FR4

M
Y
121
177

For the most profound influence comes from Europe. Modern large-scale economics engulfing primitive small-scale economics, legislation by Protectorate Government, contact with Christian Missions and with European ways of life and thought—these together are shaking Nyanja and Yao society to its foundations. Constructive elements they do, of course, contain, but rebuilding on the ruins has hardly begun. In order to understand the present with its problems and promises for the future, we must know something of the past ; the traditional Nyanja and Yao relationship system is the key to this past which I would try here to put into your hands. It is not yet too late to grasp. The greatest changes began within living memory, and where village and family life has been revolutionized, relationship terms are still untouched. Hence, if we study the more conservative members of the tribes in the light of these terms, we should be able to piece together a fairly accurate outline picture of their original society. I make no attempt here to analyse in detail their relationship system : a study of the mutual responsibilities and interdependencies inherent in it, and the changes it is now undergoing, would require many years, and its results fill a large volume. This paper may, I hope, serve as an introduction to another's study, made before it is too late.

M
611
591
582

Nyanja society differs from any modern European social group in three ways : it is matrilineal ; it is matrilocal ; by the traditional practice of bilateral cross-cousin marriage, (i.e. marriage to the daughter of one's mother's brother, or, equally, of one's father's sister) its ties of blood and affinity have become interdependent.

000

Our English society, like that of the pure Ngoni, is patrilineal, the child belonging primarily to its father's family and the son inheriting wealth, social status and sometimes political power from his father. The Nyanja child, on the other hand, belongs primarily to its mother's group ; a boy inherits social and political status from his mother's brother, and a girl from her maternal grandmother. These relatives on the mother's side arrange the children's marriages and have throughout life more authority and

M
611
602

9:Lawson Y-5 (ca.1940)1949 FT7 Yao :
[P. 181B]

611 influence over them than have the father and his
602 group. If a marriage is dissolved any children
which resulted from it stay with their mother at
[586] her home village : their father, whether or not
responsible for breaking up the home, has no
claim on them.

The relationship of blood is the basis of Nyanja
592 village life. All members of a typical homestead,
(*mbumba*), are relatives or affines, (that is, con-
nected by marriage), and the custom of matri-
local marriage determines that a man must live
at the homestead of his wife's parents, usually
for life but at any rate for ten to twelve years and
until he has proved himself a trustworthy son-
[361] in-law. Matrilocal marriage produces homesteads
of twenty, fifty, a hundred or more huts, where
the small family as we understand it—man,
wife and children—is merged in the larger unit.
This unit consists of a man and his wife ; their
daughters and daughters' husbands ; their un-
married sons ; their daughters' daughters and
sons-in-law ; their daughters' unmarried sons,
and so on down the generations. Family authority
is divided between the oldest woman in the home-
stead, who is grandmother, (*ambuye*), par ex-
cellence, and her eldest brother, (or, if he is dead,
his heir, normally the eldest son of her eldest
daughter). This man, the owner of the homestead,
(*mwini mbumba*), is considered as the ultimate head
of the family, but he takes advice from the fe-
male *ambuye*. The male head of the family,
[591] however, unless a petty chief over several home-
steads, must live at his chief wife's home and so
can only visit his own *mbumba*, not reside there.

178 To-day the ties that bind a family group are
[592] weakening and authority is shifting from the mater-
nal uncle to the father ; young people mostly
[582] choose their own mates, and bilateral cross-
cousin marriage, although not dead, is dying.
The relationship terms, however, preserve a re-
601 cord of days uncertainly recollected by the oldest
people living, when this was normally practised
as the preferential marriage. Moreover, one
182 can readily understand the value then of cross-
582 cousin marriage between pairs of nearby villages :
in a society where strangers were distrusted
and interclan and intertribal warfare was rife,

9:Lawson Y-5 (ca.1940)1949 FT7 Yao MARAVI FR4
[P.182A]

182 people can only have felt safe in the home village
582 of either father or mother.

593 Let us now, with the help of Tables X and Y, work out in detail this relationship system, see what it means to a Nyanja to live in a matrilineal society and grow up in a village based on matrilocal marriage, where possible between cross-cousins.

To take first the girl *Abena*, offspring of a cross-cousin marriage between a man of the Milanzi, and a woman of the Mwale, clans. Abena
[411] inherits from her mother membership of the Mwale clan, is born at Mpoto village, her mother's birthplace, and is tied for life to her family (*mbumba*), which she must follow wherever it may move in search of land or to avoid hostile tribes. The first person Abena knew, **her mother,** was very close to her throughout infancy. She spent
[854] most of the day tied on to mother's back, and at
[595] night lay on her sleepig-mat. Her father, who has a second wife in a nearby vilage, was not always at home. Then one day her mother, be-
603 come pregnant again, refused her the breast,
[591] and soon Abena was taken into her **mother's**
861 **mother's** hut to sleep there with the children of her mother's five sisters. From now on her grand-mother is as important to the girl as her
[855] mother : Abena plays round Granny's door, as often as not eats from her porridge-bowl, is given a tiny hoe and taken to her maize garden to "help", and is instructed by her in correct behaviour towards all the homestead. On warm spring evenings the children listen to Granny's riddles, fables and tales of the ancestors, from which informal school they absorb much of the traditional wisdom of the tribe. When she reaches
[882] puberty, Abena will be taught by her grandmother and perhaps another old woman her new responsi-
[593] bilities and the taboos she must observe—her mother could never speak to her of sexual matters.
592 This *ambuye*, the oldest woman in the home-
602 stead, is, indeed, its female head, having inherited from her mother's mother the revered family name of "Abena" together with the supreme authority. Hers especially is the task of teaching the young children, advising the newly-married grand-daughters and their husbands, and hearing

9:Lawson Y-5 (ca. 1940)1949 FT7 Yao FT7 MARAV. FR4
[P. 182 B]

M 592 602 all kinds of quarrels. As she, like her daughter after her, married a cross-cousin from Saima village, her husband is a Milanzi, and although a man of character whose advice is welcomed, and called *ambuye* by Abena's generation, his voice has not the same weight as hers in deciding village affairs.

M 601 [553] Abena the girl, then, grows up under the care of her mother's mother, who by naming her at birth claimed her as her heir and especial trust, and who singles her out from her younger brothers, sisters and cousins by the way she addresses and treats this first-born and favourite. As M [551] personal names are not normally used or referred to in conversation, Abena I speaks of, and to, Abena II as *mdzukulu*, (the name used to cover all grand-children, besides a man's nephews and nieces, and so best translated as "heir"). More commonly the old woman and the girl call each other respectively, *mkulu wanga*, (i.e. "my elder sibling of the same sex", between women "my elder sister"), and "*mphwanga*", (i.e. "my younger sibling of the same sex", Y [601] between women "my little sister"). The Yao term *chemwali*, which may be exactly translated as "elder sister", is also often used, as is the familiar reciprocal term—between all grand-M [553] parents and grand-children, *anganga* ; but the special titles used between a person and his or her name-child and heir are *nzinanga*, (literally, "my namesake"), and *bwenzi langa*, ("my friend, lover").

M 601 But Abena II has other *ambuye* in the village. Her grand-mother's younger sisters and their husbands are called by this same name, and all call her *mdzukulu* and encourage her to treat them with the like friendly confidence. More familiarly, the old women and the girl may speak of each other as *mkulu wanga* and address each other as *chemwali*—Abena II would not be called *mphwanga* because she is potentially their elder sister, the future *ambuye* of the village—while the old men and the girl can speak of each other as *msuwani wanga*, (my cross-cousin), and address each other as *alamu*, (brother-or-sister-in-law). These last names I will explain later, when discussing the relationship between Abena

M
582
M
Y
601

9:Lawson Y-5 (ca. 1940) 1949 FT7 Yao FT7
[P183] MARONI FRY

CROSS-COUSIN MARRIAGE (WOMEN'S LINE)

TABLE X

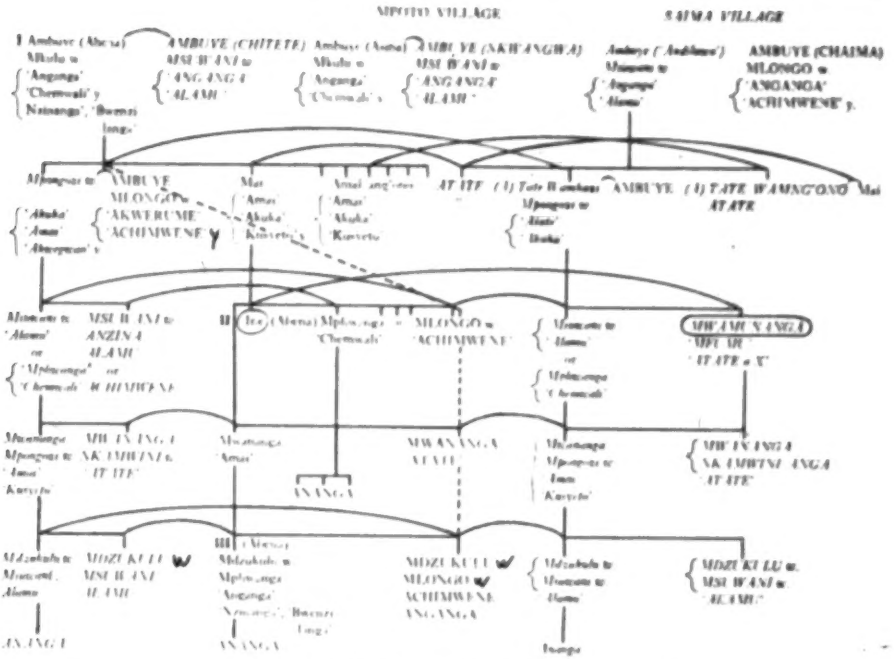

KEY TO TABLES X AND XI

1 Members of Mnale clan, born at Mpoto village, as roman type
Members of Mdanzi clan, born at Saima village, as italic type

2 Capital letters signify males, small letters females

3 A B C means the man 'A' has married the women 'B' and 'C'

4 I, II, III, signify female inheritance of the title *ambuye*, that is, headwoman of the homestead, and the family name "Aluma".

5 I, II, III, and dotted lines, signify male inheritance of the title *ambuye*, that is, headman of the homestead, and of the family name "Aluma".

6 w = *mzungu* (m.) y = Yao as opposed to Nyanja name or title.

n
582
601

9: Lawson Y-5 (ca. 1940) 1949 FT7 Yao ...
[P. 184]
MANJI FAY

TABLE 7

CROSS-COUSIN MARRIAGE (MAN'S SIDE)

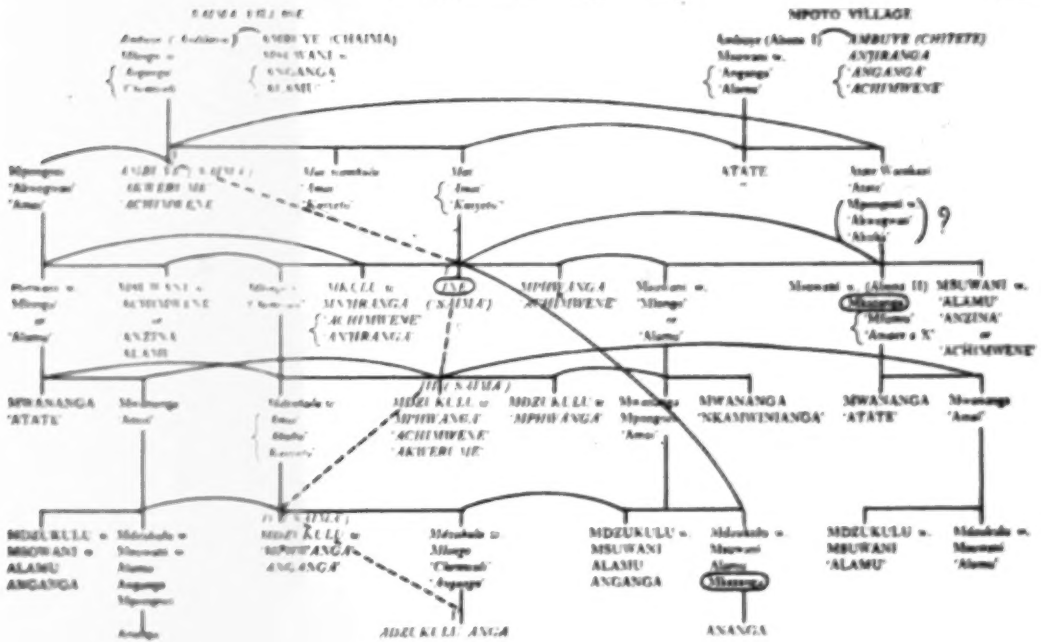

KEY TO TABLES X AND Y

1. Members of Mwale clan, born at Mpoto village, in roman type. Members of Mkanga clan, born at Sazma village, in italic type.
2. Capital letters signify males, small letters females.
3. A ⌒ B, means the man 'A' has married the women 'b' and 'c'.
4. I, II, III, signify female inheritance of the title *ambuye*, that is, headwoman of the homestead, and the family name "Abana".
5. I, II, III, and dotted lines, signify male inheritance of the title *ambuye*, that is, headman of the homestead, and of the family name "Imma".
6. w = *wanga* (my); y = Yao as opposed to Nyanja name or title.

601 and her cross-cousins, for I wish now to turn to the people of her parents' generation in her home village of Mpoto.

Abena and her mother call each other sometimes *amai*, sometimes the still more respectful term *akaka* or its Yao equivalent *haryeto*; she and her father call each other *atate* and *amai* respectively. But why is the little girl called *amai*—that is, "mother"? First, says her mother, to teach the child the name she herself wishes to be called; second, to accustom her to the polite use of titles rather than personal names; third, because she must consider her mother's heir—a child of her womb—as her potential mother! For when Abena I dies and Abena II steps into [428] her place, she will have the status of her own [592] mother's mother. This inheritance by alternating generations sounds paradoxical, but one must not conclude that Abena's mother scolds her when she is naughty any the less for her being the future female head of the village: their relationship is as it were a faint reflection of that between our Queen and princess Elizabeth when a child.

593 Custom does not permit Abena and her parents to call each other by the same variety of affectionately familiar names as may Abena I and her heir, for their mutual behaviour should be less free and easy. Nevertheless, both Nyanja men and women have by word and deed assured me that to the end of their lives they love and honour their mothers—their true mothers—above everyone, including wife or husband. I say love and [882] *honour*, for the respect due to father and mother is brought home to boys and girls at puberty when they are taught certain taboos, (e.g. to avoid their parents' sleeping-place in the hut); moreover, care for their parents in old age is [888] then impressed on them as their first duty in life—a duty sanctioned in pagan belief by the return of the dead in dreams to bless or curse filial or unfilial offspring.

601 Besides her own father and mother, little Abena finds in the village others of their generation—her mother's younger sisters and their husbands. All these call her their *mwana*; the women and girls address each other as *amai* or *akaka*, and the men and girl as *atate*, *amai*,

NARAVI F.R. 4

601 respectively. Here again, as with the generation above, we see how the classificatory system of relationships works out : there are no terms for "aunt" or "uncle" ; all the women of Abena's mother's generation in her home village are her "mothers", all the men her "fathers", while she is "niece" to none but "daughter" to all. We
602 must not imagine, however, that children do not in their minds normally distinguish between their true and classificatory parents. Love for one's own mother is, I repeat, the deepest and most lasting affection in the life of most Nyanja. Yet surely Abena cannot feel so differently towards her true and classificatory parents as does a European child towards its parents and its maternal aunts and uncles-by-marriage : she lives next door to these aunts and uncles and knows how often a mother will hand over to a childless sister one of her own children to bring up. Indeed, I know one woman who did not discover until after her marriage that the *mai* who brought her up was not the *mai* who bore her, though I believe there was no intentional concealment.

[621] Remembering that the village is coterminous
[596] with the extended family group—that both the collection of huts and of people living in them are called by the same name, *mbumba*, — let us now look at Abena among her playmates. What a contrast with children in an English village, growing up in a tension between neighbourliness and class and sectarian jealousies, and divided into little self-contained economic units of the "family"! Every child in Abena's village is **"brother"** or **"sister"** to her, and although she probably feels her real brothers and sisters especially close to her, yet she sees every bit as much of the children of her mother's younger sisters, for now as small children all eat, play and sleep together in their grandparents' hut. Abena
601 is *mbale* or *mujira* to all the girls, speaks of them as *ephwanga*, and addresses each as *ephwanga* or *chwanali* ; true, there are one or two actually older than her, but as daughters of her mother's younger sisters they are considered younger. Abena and the boys are *mbuga*, (sibling of opposite sex regardless of respective age), to each

ABOVE AND THE GIRLS ARE "ALWAYS," (SIBLINGS OF OPPOSITE SEX REGARDLESS OF RESPECTIVE AGES), TO EACH

other, and address one another generally by the
604 Yao terms of *achimwaw* to a boy and *chewaali* to a girl.

593 Behaviour between true, and almost equally
602 between classificatory, brothers and sisters suggests deep and lasting affection — far deeper affection than does that between man and wife. When, at or before puberty, Abena's betrothal
[582] is arranged, her eldest brother will be the go-
[584] between ; later, she may turn to him, and through him to her mother's brother, for advice and help in adjusting herself to married life, and in any serious quarrels with her husband. There are no taboos between them, and if her brother is benighted near the home village on his way to his wife's home, Abena can share her supper with him and give up to him her sleeping-mat. True
[69] brothers and sisters are so close that they consider each others' husband or wife as by adoption a blood relation, calling them brother or sister. (*mphwanga*, *mapwanga* between those of the same sex, and *alongwanga* or *achimwaw chewaali* between those of opposite sex). I believe this is the only instance of a term describing a relationship within the matrilineal family group being applicable also to cross-cousin affinity and even to strangers from a far village. Most informants
[587] declare that it would be unthinkable incest to marry a deceased brother's wife or sister's husband, yet not all are ready to call them brother and sister.

[463] As the Nyanja are an agricultural rather than a pastoral people, there is no rigid division of all labour between the sexes, nor of boys and girls into age-groups ; as in a modern European family, "brothers" and "sisters" play together freely in childhood, and still, though less freely, in adolescence. However, the girls of the village form a
857 loose group with Abena at their head. Growing
868 up together from infancy they learn from each other and through imitating the grown-ups, (*akulu*), until play develops into work, and at an early age the little girls become less of a burden than an asset to the *mbumba*. At eight or nine Abena can pound maize into flour and cook porridge with a relish of leaves, carry heavy water-jars from the stream, scratch up weeds

9:Lawson 7-5 (ca. 1940)1949 FT7 Tao
[P.186B]

857 in the garden with a small hoe, and carry bundles
868 on a journey—all which jobs she is expected to do for Granny or any "mother" who needs her help. But the companionship of her mates makes pounding an excuse for chatter and song, turns water-carrying into a bathing expedition, cooking into a game, and there is plenty of time for idleness and pure play.

601 To sum up the relationships of the **mbumba** from Abena II's point of view. She has fewer names to learn than a European child, for all members of each generation, at any rate of the same sex, stand to her in the same relationship and have the same name : all the old women and their husbands are grandparents, (*ambayo*), all the middle-aged women mothers, (*ama*), and their husbands fathers, (*atate*); all the children brother or sister, (*alongo* between opposite sex, *ephuanga* between the girls). There are no Nyanja equivalents for "cousin", "uncle", "aunt", "great-aunt", etc.

[602] Moreover, if you push to its logical conclusion the inheritance system, you find only two generations ; the third or newest is, as it were, adopted by the first, and when it grows up and bears children this fourth generation will be adopted by the second. Thus if Abena I lives to see the children of her granddaughter Abena II, (whom she has adopted into her generation with the title *ephuanga*, i.e. "little sister"), she will call these just her "children", and there is no alternative name to translate our "great grandchildren".

605 Let us now follow Abena II and her younger sister on a visit to their father's nearby village of Saima, and watch them playing with the **children of the father's sisters.** They feel quite at home here, and Abena readily accepts her paternal grandmother's invitation to sleep a few nights
[605] in her hut with these cross-cousins, *anamai*. The children at Saima are by matrilineal descent Milanzia, and so considered unrelated by blood to the little Mwale, Abena ; on the contrary, the boys are her potential mates, for just as her Milanzi father married into the Mwale clan, so Abena expects to marry back into the Milanzia.
589 She has not yet been betrothed, but there is
592 talk of an engagement to her mother's eldest brother's eldest son, and the preliminaries may

9:Lawson Y-2 (ca. 1940)1949 FT7 Yao FT7
[P. 187 A] MARAVI FRY

M 584 be gone through soon. Betrothal, however, is a
582 gradual process, whose culminating ceremony cannot take place until the marriage has been consummated. Ancient custom here varied, but
M [582] it seems that the majority of Nyanja and Yao girls married after puberty, and to young men not very much their senior. Meanwhile, Abena
M 601 calls all her boy cousins "brother-in-law", (*alamu*); she may call any one of them jokingly "my husband", (*amanange*), and he retaliate with "my wife", (*ahanange*). There exists between them,
M 605 in fact, a relationship similar to that found in many Bantu tribes and translated as "a joking relationship". The Nyanja call it *cibale cakuthuma*, which means literally "relationship of rudeness, vulgar familiarity, or swearing". It permits these cousins to call each other "Thou", (*iwe*), seldom heard even between brothers and sisters, to use great freedom of speech and mock insolence to one another, and to indulge in horse-play
M [857] together. Just how far this familiarity went in the old days, and still goes among pagans, it is impossible to discover; children, certainly, were accustomed to build grass houses together and play at families, (*kupanga masanje*), and a Nyanja writer on the subject of Bantu marriage believes that this involved a good deal of sexual play, and not necessarily only between betrothed cousins.

M Abena also calls her girl cousins *alamu* or *awiwa*,
[601] and is on very familiar terms with them; custom, indeed, seems to encourage a lack of respect between them, for Abena knows that if she does in time marry one of her boy cousins, his sisters will then feel entitled to walk into her hut and make free with her belongings, and expect her to do the same by them. Now they share with her their sleeping-mats in their grandparents' hut, together with their younger brothers. Other *awiwa* of Abena, children of her father's classif-

Pilawoo T-5 (ca. 1940)1949 FT7 Yao
[P. 187B] MARAVI PR4

605 catory sisters, sleep in their own (i.e. biological) grandparents' huts, but join her during the day; together they form a large group of children like Abena and her "brothers" and "sisters" in Mpoto village, all calling each other *anjirangu*, or *ephuaspa*, and treating their *mmmmi* or *mlama* Abena with the extreme familiarity permitted between cross-cousins, that is, potential mates.

601 In the same way Abena learns two names for her **cousins' parents**. One, designating their actual relationship with her, the *other*, their potential affinity through marriage. First, looking on the women as her father's sisters and classificatory sisters, she describes them as her "female fathers", (*atate akasi*), and calls each simply *atate*; considering the men as her mother's brothers and classificatory brothers—which in fact they are, wherever the customary marriage has taken place—she calls them "him from whom I inherit, uncle, elder brother", (*awbaye, akuramu achimwene*), and they describe her as their niece or grandchild, (*mdzukulu*), and call her "mother", (*ama*), or *bayete* in Yao. Secondly, looking upon them as her potential parents-in-law, Abena may describe them as such, (*apongosi angu*), and may address the women by the polite Yao term, *akungwao*; the men, however, she will still call *awbaye*.[1]

602 When we watch Abena and her sister with
604 their cross-cousins and paternal aunts and uncles we see clearly the difference of behaviour between *akula*, that is, blood relatives, members of the same matrilineal extended family or *mbumba*, and between members of two exogamous clans who regularly practise intermarriage. The customary behaviour between *akula*, that mixture of respect and affection which Abena has been taught at home, and which she shows almost equally to her maternal grandmother, her "parents" and her "brothers and sisters", she here uses towards

9:Lagoon X-5 (ca. 1940) 1949 X27 Tao FT7
MARAVI FRY
[P. 187 ĉ]

* It is interesting here to compare the Tonga and Tao with certain patrilineal peoples found, finding similar behavior patterns in the mother's brother and father's sister among the patrilineal Bantuspeaking East Africa or among matrilineal peoples, more than in a hypothetical only matrilineal stage of social organization. Radcliffe-Brown, however, in his article on the Mother's Brother in S. Africa, suggests a different origin. We have two other cross-Bantu patrilineal tribes—the Pokomo Tonga and the Pare Mbunguni—who like the Bantu-speaking East African patterns. Why the behaviour patterns spring directly from a tendency to extend to uncle's mother's and father's groups behaviour suitable to mother and father respectively.

The explanation would seem, of course, Radcliffe-Brown's, applied to a matrilineal people like the Tonga, where one begins as a patrilineal element from uncle's father's clans, but is now under the authority of uncle's brother-class of uncle's father.

9:Lawson Y-5 (ca. 1940)1949 FT7 Tao
[P. 188 A]

MARAVI FR4

602 her mothers' brothers, (*ambuye*), who are, of
604 course, also Mwales. But just as behaviour between the cross-cousins differs from that between *abale* so the girls behave differently towards the Milanzi women of Saima and the Mwale women of Mpoto. At Saima their respect and affection seem divorced: all the respect, mingled with something approaching fear, is given to the *atate ahazi* or *apongwai*, and all the affection, blended with a familiarity which can easily degenerate into contempt, to the *anayani* or *alamu*.

604 The relationship between a girl and the *atate*
606 *ahazi* who is to become her actual mother-in-law, (*mpongwai*), is the most difficult and delicate in Nyanja society, and so is hedged about with restrictive taboos: the girl must not eat with her nor even speak to her, must draw well aside from the path when she approaches—often running away to hide—and must not sit on her sleeping-mat nor go anywhere near her sleeping-place. In fact, any necessary intercourse between the two must be carried on through a third person, and some girls do not even dare to speak at all in the presence of their *mpongwai*. When a girl marries into a strange *mbumba*—not her father's—she can end this *ciyani*, ("modesty", "shame in the presence of . . ."), when she has proved herself a good wife by bearing her husband a child; she must, however, take her *mpongwai* a present in token that she begs permission to approach her. In some Nyanja districts, I am told, tradition forbids a girl to end this *ciyani* as practised towards her *atate ahazi*, ("female father", i.e. father's sister), so that it becomes lifelong.

601 There is one exception at least to this last
604 custom—the first child. Abena, as the eldest child of their mother, stands in a favoured position with her *atate ahazi*: while her younger sister must avoid these aunts, she may approach them; they treat her as their *bwanzi*, ("friend", "lover"), and encourage her to confide in them and make free with their houses and belongings.

(EC) As the eldest grand-daughter in her mother's *mbumba* Abena II is name-child and heir of her mother's mother; nevertheless, her father followed the custom of asking one of his sisters to name her

9:Lawson T-5 (ca. 1940)1949 FT7 Yao
[P.188 B]
MARAVI FR4

601
(553) at birth, (which second name she will probably
604 discard at puberty), and it is this custom which leads all his sisters to treat the girl as their potential name-child. Some say that the youngest child has the same freedom.

601 We turn finally to **Abena's paternal grand-**
603 **parents,** the old people in whose hut she sleeps while visiting at Saima village, and watch their mutual behaviour. At first we notice no difference from Abena's behaviour towards her maternal grandparents: here, as there, the girl often calls the old folk *ambuye* or *angange*. But it is not long before we hear her call her father's mother *alamu*, and perhaps describe her as her *anmuni*, ("sister-in-law", "cousin"), while she will call her father's father *ackinene*, ("brother"), and describe him may be as her *mlongo*, ("brother" from a girl). We remember now that at Mpoto village these names were reversed: her mother's mother is Abena's *mhalu* or *anjira*, ("elder sister") and so called *chemuali* or *anjiranga*, and her mother's father her *alamu*. How is it that Abena II can address her grand-parents as if they were members of her own generation, and how are her maternal grandmother and paternal grandfather classed together as "brother" and "sister", and similarly her maternal grandfather and paternal grand-
(429) mother as "cousins"? Remember first that inheritance on the female side descends by alternate generations, that Abena II is heir to Abena I and her girl cousins to their Milanzi grandmothers—her father's various "mothers" at
(553) Saima—and that an heir is called by the name
(554) and endowed with the status of her from whom she will ultimately inherit. Thus Abena II *is* potentially Abena I. She can call all her Mwale grand-mothers *anjiranga* ("elder sister"), and her Milanzi grand-mothers—who are in fact Abena I's *anmuni—alamu* ("sisters-in-law"), and treat these old women with almost the same familiarity as the *alamu* of her own generation. Secondly,
582 we must remember how cross-cousin marriage
591 works throughout the generations: Abena I
621 as a Mwale married a cross-cousin Milanzi
602 from Saima village; her husband built their huts at Mpoto and settled there, like several of his "brothers" with whom he forms a Milanzi

9:Lawson Y-5 (ca.1940)1949 FT7 Yao
[P. 189A] MARAVI FRY

582 minority in this predominantly Mwale village;
591 his sisters meanwhile stay at Saima with their
621 Mwale husbands from Mpoto, "brothers" of
602 Abena I. Thus at Mpoto we find the women of all three generations are Mwales, called by Abena I
[601] *ambuye* or *chemwali* in the generation from whom she inherits, *amai* in her mother's generation, *chemwali* again, (or *aphwanga*, i.e. "younger sister"), in her own generation. The men, on the other hand, are Milanzis except in the latest generation of boys and unmarried youths. In Saima it works the opposite way: the women are all Milanzis, the men Mwales—except for Abena II's boy cousins who as Milanzis stay at their home until they marry Abena and her "sisters" and come to live at Mpoto.

587 There is at Saima an example of one old
603 custom which shows how the Nyanja do in their minds identify members of the alternate genera-
[595] tions. Abena's paternal grand-father has recently taken a classificatory daughter's daughter as a second wife to help his first wife, now old, with the arduous work of pounding and fetching water. I have been given several examples of this custom and told that it used often to happen for a man to take, not his biological grand-daughter, but a great niece, grand-child of one of his wife's sisters, as a "little wife". So it seemed natural for Abena's grand-father to marry this girl of Abena's generation, whom he had always called *alamu*, and even jokingly, *akazanga*. In the same way it is conceivable that Abena II might be taken as a "little wife" by one of her matenal "grandfathers", not Citete, Abena I's husband and her mother's father, but perhaps Nkwangwa, husband of Abena I's younger sister.

128 I have tried here to reconstruct the frame-
[582] work of a couple of typical Nyanja villages as I
[619] believe them to have been bound together,
[182] before European influences upset them two or three generations ago, by cross-cousin marriage. The villages are imaginary, but the names by which their fictitious inhabitants call each other are those still used to-day, and it is from the suggestion of these names that my sketch derives.
100 But if, in truth, village life used to be organized

M 602 621 BUT IF, IN TRUTH, VILLAGE LIFE USED TO BE ORGANIZED on a kinship basis, how far, you may ask, is it still so organized? Very largely. Cross-cousin marriage may be dying out and the bigger homesteads inclining to split up, but society is still fundamentally matrilineal and matilocal. One or two examples will show in what ways it is changing and in what ways it is fairly stable.

Y 592 Y [595] I. An old Yao friend of mine, X, who died three years ago was the grand-mother (*ambuye*) of Y, a village of 13 huts divided in two by a government-built road. Her father was a polygamist; her husband, (dead before I knew her), had had two other wives in nearby villages; when some 12 to 15 years ago she and her family, (*mbumba*), moved here, parts of it broke away, leaving her with a much smaller homestead than that in which she grew up. Besides the abandoned hut of my dead friend X, are those of a sister, two daughters and their husbands, six nieces (the daughters of three different sisters) and their husbands, a widowed step-brother, a step-son who has brought his wife to his home probably because her brother married his sister and so lives at Y, and a "boys' hut", (really a kitchen too), in which sleep or slept the bigger sons of one of her nieces.

M 592 M [591] [183] M [596] [601] II. A Nyanja friend, A, five or six years ago was allowed by his parents-in-law to take his wife back to his home village. Here, therefore, contrary to matrilocal custom, he lives with his own parents; but the rest of the homestead is matrilocal. When A built his hut here there were four other huts: his parents; those of a younger sister of his mother, (*mai wamng'ono*, "little mother"), and her husband; a girl cousin, this aunt's daughter and so called by him "sister" (*chemwali*), and his only married sister. It is still a small homestead, though another sister has since married and her husband built a hut here, and his young unmarried brothers have built their own "bachelors' hut", (*cinyamata*) where they sleep with one of his nephews; it can never be large, since his parents had eight sons, who as they grow up and marry go off to their wives' homes, and only two daughters to bring them sons-

9:Lawson Y-5 (ca.1940)1949 FT7 Yao FT7
[P.190A] MARAVI FR4

M 592 in-law in place of sons ; and it is unlikely that many, indeed any, of his brothers will be able as A has done to overcome matrilocal prejudice. Many relatives, however, live close by, M 361 592 having broken apart from an originally large homestead ; less than a mile off live an elder sister of A's mother, (*mai wamkulu*), with a married daughter, and perhaps a mile in the other direction live his mother's mother's brother and his mother's brother, (both *ambuye*), with their families of married daughters and granddaughters, unmarried sons and grandsons—a homestead of seven or more huts. Moreover, about fifteen miles to the East, near the shore of Lake Chilwa, is the original settlement of the Saima clan, to which A belongs through his mother and where, but for the peace brought by the Europeans, he and all his scattered relatives would probably still, he says, be living. Thus, though the average homestead to-day numbers, say, ten to fifteen huts, another part of the original family unit, (*mbumba*), is often to be found in a second small homestead not far off, and large compact villages of up to forty or fifty huts are still not uncommon. One chief's village I know has twenty-six huts, another beside the Shiré has thirty. Both these are matrilocal homesteads inhabited (if my informants were truthful) only by relatives and affines.

Y M 607 The examples cited show how strong is the kinship tie even under modern disruptive influences, and suggest how all-powerful it once was. I have called it a key to Nyanja and Yao society, for I believe their culture derives from it at every point : marriage, homecraft, agriculture, education, religion, were all bound up with the *mbumba*. But my aim here is not to describe the tree, merely to try and unearth its roots ; and so, with one suggestion as to how these roots are entwined, I must end.

Y M 614 We find among the Nyanja and Yao vestiges of an exogamous matrilineal clan system which hint at a possible origin of cross-cousin marriage. Any Nyanja or Yao will tell you that he inherits from his mother membership of a certain clan,

MARAVI FR4

Y
M (*mtundu*, or among the Ngoni and the Nyanja
614 influenced by them, *mfumba*),—say the Mwales'.
Y
[582] His father is of another clan—as likely as not the
M Milanzis'—for it is considered incest for two
Y Mwales to marry. He will tell you that he addresses
[608] every Mwale he meets, even a stranger from a
[609] far village, as "brother, sister, father, mother",
(*achimwene*, *chemwali*, *atate*, *amai*) according
to age and sex, and feels obliged to offer them help
and hospitality—although this feeling is in most
parts dying out. The Milanzis of his own generation whom he meets he considers in the same way as his cousins, (*azwani*), and treats, or used to treat, with the same friendly familiarity as his real cross-cousins at his father's home village.

M This extension of brotherhood to one's mother's,
174 and cousinship to one's father's, whole clan,
614 suggests that the Nyanja clans (into which possibly
[602] the Yao married) may have grown each out of
an extended family group, (*mbumba*), living or
M travelling together. Cross-cousin marriage would
[582] follow naturally on friendship between two
such nearby groups, for after a few generations
of intermarriage the groups would become so
connected that a man born into the one and marrying into the other would in actuality be marrying
his cross-cousin. Moreover there is a tradition,
M at least among the Nyanja of Zomba District,
[173] which bears out the evidence of the relationship
terms. Old people tell how the earliest leaders
of their tribe entered the country, each surrounded by his *mbumba*, and settled first here
then there ; they explain how each group came
to be named, and how lasting friendship arose
between the Amwale under Chief Mpoto and
the Amilanzi under Chief Saima, and similarly
between the Apiri and the Ankhoma, the Ambewe
M and the Achanza. Whatever truth lies behind
177 this tradition, it is certain that to-day, however
601 scattered the clans may be and however generally
582 the young men reject cross-cousin marriage,
614 yet a Mwale still calls "cousin" every Milanzi
he meets and treats their women as potential
mates ; and the same holds good between the
Phiri and Nkhoma, Mbewe and Chanza clans.

10: Sanderson D-5 (ca. 1920)1922 FT7 Yao FT7

MAN

A MONTHLY RECORD OF ANTHROPOLOGICAL SCIENCE.

PUBLISHED UNDER THE DIRECTION OF THE

ROYAL ANTHROPOLOGICAL INSTITUTE

OF

GREAT BRITAIN AND IRELAND.

XXII.

1922.

Nos. 1—113.

WITH PLATES A—M.

[Title Page]

PUBLISHED BY

THE ROYAL ANTHROPOLOGICAL INSTITUTE

50, GREAT RUSSELL STREET, LONDON, W.C.1.

General Agent: FRANCIS EDWARDS, 83, High Street, Marylebone, W.1

New York Agents: Messrs. G. E. STECHERT & Co.

10: Sanderson D-5 (ca. 1920)1922 FT7 Yao FT7

A Note on Ceremonial Purification among the WaYao, Nyasaland.

55

By Meredith Sanderson, M.R.C.S., F.R.G.S.

One of the effects of European influences in Africa is the breaking up of tribal organisation and discipline. The rights of the individual being no longer subordinated to the common good, customs formerly observed by the village community as a whole die out, while those affecting the individual are still practised. 171

This tendency is well seen in the ancient ceremonies of purification among the WaYao which are now rarely performed collectively, though the native, however highly "educated," still goes to the doctor to obtain the necessary medicines for removing, for instance, the contamination caused by contact with a corpse. [75] [764]

These collective ceremonies have already been described by various writers in respect of both Nyasaland and elsewhere,‡ but the Yao rites have not, I think, been given in detail, and the following notes may not, therefore, be altogether valueless. 114

The *Pyajila* ceremony (*kupyajila*, "to sweep") is common to most Bantu tribes. In its simplest form it used to be performed annually by the WaYao, at the beginning of the twelfth month, count of the months (lunar) being kept by means of a "calendar."§ The whole village is thoroughly "spring-cleaned," all rubbish 796 [171] [805]

* At Sia, where the game is played on All Souls' night in the sacristy, Father Barnabas Myer tells me, the song in Spanish runs:— 000

Yano, yano, quando tu venga,
Yano, yano, hay maia.

Yano, yano when you come.
Yano, yano, I shall not be there any more.

Words imputed, presumably, to the hidden ball.

† *See* Stevenson, M. C., "The Zuñi Indians," pp. 333-341, XXIII. *Annual Report, Bureau American Ethnology*, 1904. 000

‡ Frazer, "Balder the Beautiful," II., 179, *sqq.*

§ A "calendar" consists of a string tied to two pegs in the wall of the house, or between two poles, on which are threaded twelve pieces of reed, bamboo or cornstalk. One of these is moved to the other end of the string each time a new moon is seen. [211]

10: Sanderson D-5 (ca. 1920)1922 FT7 Yao FT7

796 THE WHOLE VILLAGE IS THOROUGLY "SPRING-CLEANED", ALL RUBBISH
[364] is swept up, the ground round the houses is hoed clean, and the interiors remudded. Ceremonial beer is brewed by the head-wife of the chief, and after this has been drunk the ashes of the fire used in the brewing are carefully collected and taken to a *malebano* ("cross-roads," or "diverging of paths") where they are deposited.
[783] The chief, as representative of his people, bathes in special medicated water, a
[824] decoction made from the bark of *ng'ocaya* and *mbowa*, and the root of *mpingo*.
[621] This completes the ordinary annual ceremony, at which new fire is not made.

On certain special occasions a more elaborate ritual is carried out; such occasions are the death of a chief, a threatened epidemic of infectious disease, a murder (especially by shooting) and the frequent occurrence of quarrels in the village.

In such circumstances, in addition to the ordinary *pyajila* ceremony described above, the porridge sticks of the whole village are renewed and all fires extinguished. The discarded sticks and all ashes of the old fires are carried to the meeting of paths, where the former are stuck upright in the ground and the ashes piled together; this is done in procession, all the people taking part. On their return to the village
[372] new fire is made by friction by either the chief or his younger brother—usually the latter; fire procured in any other way would nullify the proceedings. Finally
[783] all the people bathe in the medicated water used only by the chief at the ordinary ceremony.

751 In addition to this special form of the *pyajila* ceremony, another rite is sometimes
796 performed after the occurrence of a murder or as prophylactic against the spread of epidemic disease. The doctor first makes a kind of trough (*lukungwa*) from the bark of *mtondowoko* or *mpapa*, and procures a *chichiliko* (or *chipengule*) basket—used as a strainer in salt-making. Having collected his medicines he proceeds to the bank of the stream near the usual bathing-place of the village and digs a shallow hole, in which he places the basket; in this he puts the leaves of a certain thorny shrub and covers the whole with the trough, which is banked up with earth so as to be perfectly firm. He then puts his "medicines" into the trough; these are, first, the head of an iron hammer and a piece of slag, both from a smelting furnace. On top of these he puts pieces of the root of a certain tree which has many and particularly sharp thorns, and bits of bark from two trees peculiar for having very straight stems. Having distributed these evenly along the floor of the trough, he fills it with water and then proceeds to construct an arch over the end of the trough furthest from the stream. Two long poles, cut from a kind of tree particularly rich in sap, are planted in the ground, one at each side of the trough and close to it; these are bent over towards each other, and fastened together by means of a strip of their own bark. A bamboo is now planted alongside each, and similarly tied to its fellow. During all these preparations and throughout the ceremony it is essential that the doctor has no knots in any part of his clothing.

The preparations are now complete, and when all the fires in the village have been extinguished the people go in procession to the spot where the doctor awaits them. All must be poorly clad and must have no metal about them.

[622] The chief opens the ceremony. He steps into the trough and taking some of the medicated water therefrom in his hands he rinses his mouth with it. He then
[769] offers a prayer to the spirits of his ancestors, first stating the emergency and detailing the measures which are to be taken to deal with it (new fires, sweeping, discard of porridge-sticks and shaving). The prayer over, he splashes the water in the trough over his body and passes through the arch, first throwing some gift (beads or, in more modern times, money) into the trough. These gifts, presumably
[756] intended as an offering to the spirits, are the perquisites of the doctor, and everybody is supposed to contribute in turn.

10: Sanderson D-5 (ca. 1920)1922 FT7 Yao FT7

The man and boys now pass through the arch in order of seniority; each splashes himself with the water in the trough, but neither speaks nor rinses the mouth. The women come next, led by the head-wife of the chief; the latter rinses her mouth and, instructed by the doctor, repeats a prayer similar to that offered by her husband. The remainder of the women merely splash themselves, like the men, before passing through the arch. All then return to the village, where the *pyajila* is continued. 751 796

Finally the doctor takes the hammer-head from the trough and hands it to the chief, who refits the haft into it, and, a hoe having been placed on the ground, goes through the form of forging the latter by beating it with the hammer. He then scrapes the ground with the hoe as if clearing a place overgrown with grass; he does not dig with it as in hoeing up the ground for planting seed. After this rite the chief again bathes in medicated water similar to that in the trough, and the ceremony is complete.

Whereas the *pyajila* ceremony and its adjunct, the rite of the arch, are now but rarely performed, no Yao will omit the rite of purification after a death in his family. This ceremony consists of two essential parts, both protective against the *ndaba*, a disease characterised by dropsy and supposed to be contracted by contact with a corpse, or by association, especially by sharing a meal, with those who have been in such contact. The first of these parts is bathing in certain medicines, which protects the bather from *ndaba*, and the second consists of a sort of communion meal, shared by all friends and especially relatives with those who have been contaminated, and designed to protect those friends and relatives. [178] 751 764 796 783

The decoction for bathing is made by soaking the roots of *lugwalambati* and *lumlemela* in water, together with the bark of *mkomwa*, one piece each from the east and west aspects of the tree; the water assumes a reddish tint, and the whole body is bathed. 751 783 824 765

The communion meal consists of porridge made from any kind of flour or of rice, and some *ngunda* beans. In the latter some scorched and powdered root of *mandangelele* is mixed, with a little salt. All near relatives of the deceased must partake of this meal, as well as their wives and their near relatives; part is carefully put aside for the use of any relative unable to be present at the ceremony. [262]

Latterly, since the spread of Islam among the WaYao, this rite has become confused with the distribution of food to the poor at the funeral of a Muslim, and the Arabic word *sadaqa* ("charity") is now generally used for it, to the exclusion of its wider, correct meaning. [177] [797]

It may be mentioned here that after the death of a child the father is denied access to his wife for a period of about three weeks, and the first act must be one of *coitus interruptus*. 765 784

MEREDITH SANDERSON.

11: Sanderson D-5 (ca. 1920) 1920 FT7 Yao FT7

THE JOURNAL

000

OF THE

ROYAL ANTHROPOLOGICAL INSTITUTE

OF

GREAT BRITAIN AND IRELAND.

VOL. L.

PUBLISHED BY THE
Royal Anthropological Institute of Great Britain and Ireland,
50, GREAT RUSSELL STREET, LONDON, W.C. 1.

All Rights Reserved.

[title page]

11: Sanderson D-5 (ca. 1920) 1920 FT7 Yao FT7

RELATIONSHIPS AMONG THE WAYAO.

By Meredith Sanderson,
Medical Officer, Nyasaland Protectorate.

Introductory.—Various writers have attempted to give English equivalents to the Yao terms describing relationship, or have alluded to the outstanding features of the system, but I am not aware that anybody has hitherto worked out the whole system. 121

Although it is very similar to other classificatory systems, I feel that a description of it may not be quite valueless, more especially on account of the evolutionary changes that are taking place.

The WaYao are a Bantu tribe, exogamous but not totemic, which until the middle of the last century inhabited that part of Central Africa lying to the East of Lake Nyasa, particularly in the valleys of the Lujenda and Rovuma rivers. Up to that time the tribe had not extended far from the area indicated except perhaps in a northerly direction, but owing to constant internecine war in their own territory the Yaos then invaded and conquered a large part of the neighbouring territories, especially to the south, in what is now called Nyasaland. 101 131

I have said that the WaYao are not totemic, and that statement is correct at the present time. Opinions differ, however, as to how recent their loss of totemism is; though their initiation ceremonies are generally regarded as totemic, even there, in my opinion, the evidence is not conclusive, and there remains no suspicion of totemism outside these ceremonies. 191

It should be mentioned that Islam is much more prevalent among the Yaos than among their neighbours, but its influence is not yet so deep-rooted as greatly to obscure the pure tribal customs, except to a certain extent among the rising generation. [199]

To facilitate description the relationships are given in tabular form, the relationship being given with reference to one man or woman. [128]

In Table I, Column 1 describes the relationship, Column 2 gives either the nearest equivalent of the Yao term, or, if none, the actual terms. Columns 3-9 give the various relations of the person named in Column 1, as they would be named by the man or woman under consideration. 601

For example, the brother of (*a*)'s father (Column 1) is regarded as (*a*)'s father (Column 2), the wife of (*a*)'s father's brother is (*a*)'s *always* (Column 3), their child a his "brother" or "sister" (Column 4), and so on (see Table I).

601 In Table II, the relationships mentioned in Column 1 are defined in Columns 2-9.

Thus a brother (of (*a*)) is, *inter alia*, the son of (*a*)'s father's brother (Column 3), the husband of the daughter of (*a*)'s father's sister (Column 4), and so on (see Table II).

Before the tables can be fully intelligible, however, a brief explanation of terms having no English equivalent is necessary :—

(*a*) *Akwepo* and *Akwaw* are terms exclusively given to relations by marriage.

Akwaw is a brother or sister by marriage—it is not advisable to use the terms "brother-in-law" or "sister-in-law" as they are too circumscribed.

Akwepo has not even an approximate equivalent in English owing to the diversity of relationships included (*e.g.*, wife's mother and great-grand-daughter's husband).

Mcidani is a special term given to the children of a paternal aunt or maternal uncle, to distinguish them from those of a paternal uncle or maternal aunt.

[582] *Acidani* are not only allowed to marry but are encouraged to do so.

Akwelume is used only for a maternal uncle, and *akipwe* is the reciprocative term for a sister's son.

The use of inverted commas with English terms (*e.g.*, "brother") indicates that the person is regarded by the Yao as being of the same relation to him as the term usually signifies in English. Thus a Yao regards the son of his maternal aunt, for instance, as being exactly the same relation as his own brother (by the same parents); this relationship is indicated as "brother."

601 488 *Succession.* The common rule of discriminating between the children of a brother and sister and those of two brothers or of two sisters is present here, and is combined with the equally common one of succession to the sister's son.

The rule of succession is, strictly speaking, to the eldest son of the eldest sister. If, however, a man and his advisers consider him to be unsuitable, or in event of his death, the succession passes to the following in order of precedence : younger son of the eldest sister, younger son of a younger sister, and son of own daughter.

Only by general consent can the succession pass elsewhere, but it not infrequently happens that intrigue preceeds the death of all the legal heirs of a wealthy or powerful man. In such cases, but only by general consent, the succession may pass to a brother (by the same mother), any "son," or even to a powerful vassal ; it is often felt that a wealthy or influential man is likely to conduce to the peace and welfare of the country rather as the chief, than as a probably turbulent vassal of a man whose succession is apt to be controversial. On the death of such a man, however, matters are often in a state of chaos owing to the multitude of claimants, the members of the two families ; I have known two such cases. A man, also, who

[TEXT CONTINUES ON Page 374--ANALYST]

TABLE I.—*Showing the Tam relationships of one person.*

1.	2.	3.	4.	5.	6.	7.	8.	9.
English Relationship.	Tam Relationship.	Relationship of Wife or Husband.	Relationship of Child.	Relationship of Child's Wife or Husband.	Relationship of Grandchild.	Relationship of Grandchild's Wife or Husband.	Relationship of Great-Grandchild.	Relationship of Great-Grandchild's Wife or Husband.
Own father	Father	Mother	Brother or sister	Above	Child	Above	Grandchild	Above
Own father's brother	Father	Above	Brother or sister	Above				
Own father's sister	Father	Father	Husband	Brother or sister				
Own mother	Mother	Father	Brother or sister	Above				
Own mother's brother	Above	Above	Husband	Brother or sister				
Own mother's sister	Mother	Father	Brother or sister	Above				
Husband or wife's father	Above (father)	Above	Above	Brother or sister				
Husband or wife's father's brother	Above (father)	Above	Above	Brother or sister				
Husband or wife's father's sister	Above (father)	Above (father)	Brother or sister	Above				
Husband or wife's mother	Above	Above (father)	Above	Brother or sister				
Husband or wife's mother's brother	Above (father)	Above	Brother or sister	Above				
Husband or wife's mother's sister	Above	Above (father)	Above	Brother or sister				
Brother's wife's brother or sister	Above	Brother or sister	Child	Above	Grandchild	Above	—	—
Sister's husband's brother or sister	Above	Brother or sister	Child	Above				
Husband's or wife's brother's wife's brother or sister	Brother or sister	Above	Child	Above				
Husband's or wife's sister's husband's brother or sister	Brother or sister	Above	Child	Above				
Own child	Child	Above	Grandchild	Above	—	—	—	—

[1] Including son or daughter of married sister or paternal uncle.

TABLE II.—*Defining Tao terms of relationship.*

1.	2.	3.	4.	5.	6.	7.	8.	9.
Tao Term.	Own Father's or Mother's	Father's Brother's	Father's Sister's	Mother's Brother's	Mother's Sister's	Wife's or Husband's	Son's or Daughter's	Grandchild's
"Brother"	(a) Son (b) Husband of (a)'s wife's "sister"	(a) Son (b) Husband of (a)'s wife's "sister"	(a) Husband of daughter (b) Husband of (a)'s wife's "sister"	(a) Husband of daughter (b) Husband of (a)'s "sister"	(a) Son (b) Husband of (a)'s wife's "sister"	(a) Male husband (b) Husband of "sister" (c) "Brother's" wife's "brother" (d) "Sister's" husband's "brother"	—	—
"Sister"	(a) Daughter (b) Wife of (a)'s husband's "brother"	(a) Daughter (b) Wife of (a)'s husband's "brother"	(a) Wife of son (b) Wife of (a)'s husband's "brother"	(a) Wife of son (b) Wife of (a)'s "brother"	(a) Daughter (b) Wife of (a)'s husband's "brother"	(a) Female husband (b) Wife of "brother" (c) Brother's wife's "sister" (d) Sister's husband's "sister"	—	—
"Father"	"Sister" (of own father)	"Brother"	(a) "Brother" (b) Husband	—	Husband	(By marriage) (a) Father (b) Father's brother (c) Father's sister (d) Husband of (a) (e) Husband of mother's sister (v. always)	—	—
"Mother"	"Sister" (of own mother)	—	—	"Sister"	"Sister"	—	—	—

601

Alone	(a) Husband of daughter (b) Wife of son	(a) Wife of son (b) Husband of daughter (c) "Brother-in-law" and "sister-in-law" of (a) and (b)	—	—	(a) Wife of son (b) Husband of daughter (c) "Brother-in-law" and "sister-in-law" of (a) and (b)	(a) "Brother-in-law" (b) (a)'s wife's brother's wife (c) (a)'s wife's "sister-in-law's" husband (d) "Sister-in-law" (e) (d)'s husband's brother's wife (f) (d)'s husband's sister's husband	—	—
Always	Husband or wife of a child of a "brother" or "sister" of the wife or husband of son or daughter	—	—	Wife	—	(a) "Father" and "mother" (b) Paternal uncles and aunts (c) Wives of uncles (d) Husband of mother's sister (e) Husband or wife of child of a "brother" or "sister" (f) Husband or wife of (e)'s child	Husband or wife	Husband or wife
"Son" or "Daughter"	(a) Grandchild (b) Child of child's wife's or husband's "brother" or "sister"	Grandchild	Grandchild	Grandchild	Grandchild	"Son" or "daughter"	—	—

11:Sanderson D-5 (ca. 1920) 1920 FT7 Yao FT7

G01 G02 knows that he is not legally justified in "entering into the name" is loath to do so, as he knows that he is not expected to make a successful chief. The defeat of Salimu, the 5th Makanjila, by the British in 1895 was, and still is, ascribed to the fact that he belonged to the male line.

The term *chipwe* (*mwipwepwe*, "his *chipwe*") may be used for any child of a sister. A female title (common amongst the Yao) descends to the eldest daughter of the eldest son of the bearer of the title.

G03 G01 G02 *Marriage.*—Relatives who are forbidden to marry are called *achidwanda*; they include all those given in the table except *achidwai*, *achiwanduli* ("grandchildren"), and the wife of the maternal uncle. An heir, on succeeding, may marry the wife or wives of his maternal uncle, but not if he has previously married one of his daughters.

It is legal, though rare, for a man to marry the daughter of his own child (*chiwanda*).

G19 G01 "*Brothers*" *and* "*Sisters.*"—The term *ulonga* is used to describe an exogamous clan, and the members are known as *ulonga* (singular)—*achilonga* or *da chilonga*, collectively. This word *ulonga* is probably a corruption of *na ulonga* ("in the clan") as it requires the use of the term *mjakwe* (*ajwe*) "a companion," instead of the possessive pronoun. Thus *ulonga mjakwe* (*achilonga ajwe*), "his (their) clan relative" (instead of *ulonga jwakwe*, *achilonga awo*).

G01 There is no general term corresponding to the English "brother." The nearest is *ulondo*, which describes the relationship between a "brother" and a "sister," it is rarely used by women, however.

The elder "brother" of a man is called *ulalo* or *ukiwawa*. These terms are used for all sons of a father's elder "brother" or of a mother's elder "sister," and for the elder brother by the same parents. They are also used by a woman for any "brothers," elder or younger, senior or junior, in preference to the term *ulondo*.

Mpanga is used for a son of a father's younger "brother" or of a mother's younger "sister," and for a younger brother by the same parents. It is used by a woman for her "sisters" in exactly the same way, but is never used by a woman of a man.

A man calls his "sister" *chawali*, collectively, *wawajawa chawali*; a girl refers to an elder, or senior "sister," by means of the same term; a man refers to a "sister" as *ulondowanga* or as *chawali*.

The term *chiwanda* is used for a "grandchild" (*mwiwandawanga*, "my 'grandchild'").

"*Father*" *and* "*Mother.*"—A paternal aunt is distinguished as *atati wakwapwe* ("female father") if necessary, though she is, of course, not addressed as such. The elder brother of a father is referred to as *atati wakulwapwe* ("the great father"), his younger brother as *atati wamali* ("the little father"). Other relatives are similarly distinguished.

11: Sanderson D-5 (ca. 1920) 1920 FT7 Yao FT7

The alternative term, *wese*, common to nearly all Bantu languages, is usually reserved for "own father," but not always. 601

Latterly, though the relationship is really *ahwyo*, the husbands of a man's "daughters" or "grand-daughters" are called *atati*—in a complimentary sense, not of course in defining relationship.

The word *ahwyo* is rapidly falling into desuetude for men, and is, nowadays, never used in speaking to a man of that relationship, though used freely as a mode of address to women.

Amao (or *achikulu-wangu*, *-wao*, etc., "my, his mother") may be further defined as "great" or "little" in the same manner as *atati*.

The parents of any *atati* or *amao*, and those of one's wife are called *ambuje* ("grandparent"). Great-grandparents are specified as "father" or "mother of my grandfather (or mother)."

The founder of a family is called *Likolo*, especially in prayer—except for the [782] augmentative prefix obviously the same word as *Nangolo*, "a parent," which includes all "fathers" and "mothers."

It is curious in this connection that a name for little girls in general, if one does not know their real name, is *chikolo*. All these words seem to be derived from *-kola* ("have," "possess"), and refer, probably, either to actual or potential possession of offspring.

Achinangolo are distinguished as "male" or "female" according as they belong to the father's or mother's side—irrespective of their own sex.

Conclusions.—The Yao nomenclature of relationships, bearing as it does the 601 evidence of former group marriages, is, like other classificatory systems, gradually 198 changing in conformity with the development of the race, so that it can be used [12] to express consanguinity; Rivers has, I believe, called attention to this process.

The Yao custom—now dying out—of lending one's wife to a visitor (usually a [839] close friend) may be a remnant of ideas carried on from communal marriage, though [594] such a privilege is never given to a relative.

In the same way a man who has had no children (a great stigma) may request [839] his friend to help him—he will never ask a relative—and all of the three parties will [840] keep the secret of the true paternity of any children resulting.

In many tribes the marriage of brother and sister, or a man with his 588 sister's child, is permitted to compensate for the law by which a man's property 835 goes to the son of a stranger, but nothing of the kind is allowed among the Yaos. Indeed, they view any incestuous union with particular horror, and such must be very rare. I have heard of a case of a man committing incest with the idea that he would thereby become endued with supernatural [591] power, but all he gained was ostracism; in the old days he would have been burned.

11:Sanderson D-5 (ca. 1920) 1920 FT7 Yao FT7

4D8 198

It is becoming increasingly evident, however, that the law of succession is being avoided, not by extension of the number of marriageable relatives, but by laxity in the observance of the law itself. Nowadays the legal heir is never quite sure of his position, though, as a matter of fact, there is not now much competition for a position which, under European rule, is often exacting and yet unprofitable.

581

Moreover, owing to the abrogation of the drastic native laws regulating the sanctity of the marriage tie, marriages are becoming increasingly temporary in character. This is reflected in the system of relationship, as the relatives by marriage are becoming equally temporary.

2: Mitchell E-5 (1946-1949) 1956 FT7 Yao FT7

CHAPTER I

THE PROBLEM IN ITS ECOLOGICAL SETTING

The Problem

At a joint meeting of the Royal Anthropological Institute and the International African Institute in 1948, Gluckman said: 'Many District Officers have described the village headman as the invaluable Non-Commissioned Officer of native administration. Yet despite various references in earlier literature to his important political, legal and ritual responsibility for his dependants, there has not yet been an adequate appreciation of his key position in the social structure.'[1]

In this essay, I have tried to examine this problem in relation to one of the tribal groups in British Central Africa. Gluckman pointed out that one fact among the diverse characteristics of Central African peoples is constant—people live in villages. This was observed by the earliest travellers in the region, who gave the English word 'village' to the groupings of huts they saw, and so this important point passed imperceptibly into the descriptions of the social organization of the peoples. Yet, perhaps because of its very obviousness, it is an interesting fact that no studies have been made of the position of the village as such in the social structure. It is clear that Lozi villages[2] and villages along the Luapula River, where the environment sets a stamp on the village composition,[3] are different from Nyakyusa villages where boys of one age-grade strike out to found a new village,[4] or from Ngoni villages where a diversified set of kinsmen

[1] Gluckman, M., Mitchell, J. C., and Barnes, J. A., 'The Village Headman in British Central Africa', *Africa*, xix, 2 (April 1949), 89-106.

[2] Gluckman, M., *The Economy of the Central Barotse Plain*, Rhodes-Livingstone Paper, No. 7 (1941), and his contribution to the symposium, *Seven Tribes of British Central Africa*, eds. Colson, E., and Gluckman, M., Oxford University Press for the Rhodes-Livingstone Institute (London, 1951).

[3] Cunnison, I., *Kinship and Local Organization on the Luapula*. Communication from the Rhodes-Livingstone Institute, No. V (Livingstone, 1950).

[4] Wilson, G., 'An Introduction to Nyakyusa Society', *Bantu Studies*, x, 3 (1936), and Wilson, M., *Good Company*, Oxford University Press for the International African Institute (London, 1951).

2: Mitchell E-5 (1946-1949) 1956 FT7 Yao FT7

121 adhere to a headman whose position is fixed in an historically
621 determined hierarchy.[1] Yet it stands the test of observation that there are in all tribes of this region small concentrated settlements of people who look upon themselves as groups, and who play an important part in the political activities of the community.

In my analysis of the social structure of the Yao, I have taken the village and tried to see it as a unit in a larger field of political relations. I have also tried to see it as a unit in itself, internally differentiated. I have taken the district under the jurisdiction of a Native Authority as the whole, the universe, which is to be resolved into parts. Before the British forces subjugated the
121 tribes of Nyasaland, there had been a period of intensive tribal
621 movement and intertribal warfare. Some groups had gathered
648 around successful warriors and maintained their identity; others had been broken and dissolved by stronger forces. The British conquest ended the period of military adjustment, and for administrative purposes the country was divided into districts. Within these districts some adherents gathered around their former leaders while others preferred to remain where they were. Tribes such as the Nyanja, who were the original inhabitants, remained in residence; newcomers such as the Lomwe immigrated from Portuguese East Africa. But when the Administration later officially recognized chiefs in these districts it was the successful Yao invaders who were recognized and not the indigenous Nyanja or immigrant Lomwe.

121 While the war-making units of the Yao—the tribal groups under numerous chieftains—were broken up by the British forces,
621 the smaller component units, the villages, survived. From early records and from the tales told by old men who can still remember something of the pre-White days, we know that the people have always lived in villages, though their structure has probably changed since those days. The villages were far and away the most important social units within any of the chiefdoms. The 'village' was and still is a key concept in Yao thought. I shall demonstrate later that it was the smallest group acting in the political field. At the same time it was, and still is, the field in which kinship was most significant. This is why I have taken

[1] Barnes, J. A., in his essay 'The Fort Jameson Ngoni', *Seven Tribes, and Politics in a Changing Society*, Oxford University Press for the Rhodes-Livingstone Institute (Cape Town, 1954).

2: Mitchell E-5 (1946-1949) 1956 FT7 Yao FT7

the village as the fundamental unit in my description of Yao social structure. I have tried to describe other social groups in a village context: for example, how lineages and families make up the village; how the religious congregations, particularly the Moslems, still organize their relationships on a village basis; and so on.

The position of the village in the social structure therefore has to be analysed from two aspects. Firstly, it is a unit within an organized whole—the chiefdom. Secondly, the village itself is a whole, with its own structure and morphology. Dividing the total structure into two sections and considering the village both as a part of a whole and as itself an organized whole, simplifies description. In fact, there is one continuum of social relationships, and the internal organization of a village reflects its position in the total structure. For example the fission of a matrilineage is significant in both the fields of kinship and politics, since through it kinsmen separate and found new villages.

Throughout this essay I use the word 'village' to mean both a concentration of huts and a social group. The two ideas are inseparable in Yao thought and it will be clear from the context of the sentence which meaning I intend. A word of warning is necessary here for those who are familiar with Administrative terminology in Nyasaland. The Administrative use of the word 'village' is different from mine. To me a village is a discrete cluster of huts occupied by a group of kinsmen who recognize their own identity against similar groups. The Administration has for its own purposes classified the population of each district into 'villages' under remunerated 'village headmen'. Very frequently these do not fall directly within the scope of this study. Wherever I refer to the villages in the Administrative sense I shall use the phrase 'Administrative village'; otherwise the word 'village' refers to the indigenous social group which I have defined.

In order to burden the reader with as few strange-sounding names as possible, and to spare him the task of learning many general village backgrounds, I have tried as far as possible to draw my illustrations from two villages, Ali Kasunka and Cikoja.[1]

[1] These names and the names of most of the characters in this book, except those of the well-known chiefs, are fictitious, so that their anonymity might be preserved.

2: Mitchell E-5 (1946-1949) 1956 FT7 Yao FT7

121 But I have used illustrative material from other villages where it was more complete or less confusing. In Appendices, I set out genealogies, hut censuses, and plans, of the two villages. In the text I use reference numbers in these genealogies, by generation and position in generations, to identify people.

It is necessary to select illustrations because the structural uniformities I wish to describe are often hidden by the idiosyncrasies of particular examples. The general principles of social structure, as I present them here, have been abstracted from my observations over a period of two years, not only in Cikoja and Ali Kasunka villages, but in many others in the Machinga area. I present my illustrations not with any belief that they prove my analysis, but only to help the reader set the principles I describe in the reality of Yao life.

The Field Work

123 I spent the first two weeks of my stay in Nyasaland talking over my proposed field work with the Administrative officers of the Nyasaland Government. The Provincial Commissioner suggested that I should do a round trip of the Yao area with the District Commissioner at Zomba. After this tour, in consultation with Chief Kawinga and the District Commissioner, I decided that the best place for me to start would be in Chief Chiwalo's area. The District Commissioner then took me to Chiwalo who indicated a site in his court-village where I could pitch my tent.

124 For the first week I held meetings with the chief and some of the older men of the vicinity and spent most of my time making notes on material culture, 'customs' and history. On the first page of my notes I find that there is a good description of Yao beliefs in sorcery, all described as if it were in the past: a full year was to pass before my informants were prepared to admit that these beliefs were still held. After a week or two of this 123 general activity I decided to try my first village census. The 125 results were hardly encouraging. Often when villagers knew 203 I was coming they slipped away into the bush. Those who were left frequently refused steadfastly to answer my questions. Many rumours arose to explain my presence. I heard, for example, that I had been sent by the Government to record the names of those to be taken away as soldiers for the next

6: Mitchell E-5 (1946-1947) 1949 FT7 Yao FT7

AN ESTIMATE OF FERTILITY IN SOME YAO HAMLETS IN LIWONDE DISTRICT OF SOUTHERN NYASALAND[1]

J. CLYDE MITCHELL

1. Introduction

KUCZYNSKI has drawn attention to the deplorable incompleteness of censuses of colonial populations.[2] In order to make estimates of population trends among non-literate peoples, therefore, we have to rely on the analysis of samples drawn at random from the population as a whole.[3] The difficulties to be surmounted even for so limited an objective are considerable. 12

The first and most difficult problem is that of securing what may be considered a statistically random sample. Often there are not even accurate maps of the areas to be surveyed, and sometimes Administrative records of such larger units as villages are inaccurate. The universe from which the sample is to be drawn is thus often unmeasured and unknown. Even when this difficulty is overcome there are yet other practical problems to be solved. These may include factors such as climate, disease, inaccessibility of some areas, which militate against a successful survey.

However, most serious of all from the demographer's point of view is that much of the information that he wants is difficult to obtain from non-literate people. Usually there is some suspicion and reticence in giving information about numbers of people,[4] and this implies that the investigator has first to gain the confidence of the people with whom he is working. Another set of difficulties is encountered because the people themselves cannot easily answer questions framed in concepts with which they are not familiar. Probably the most outstanding of these is the question of ages of individuals, since few, if any, non-literate people reckon age in years as we are accustomed to do. Recourse must therefore be had to some method of estimating age. This can be done in different ways, depending on the people studied. Thus, for example, some people have what are called age-regiments into which all members of the tribe are inducted periodically (about every five or six years in the case of the Tswana of the Bechuanaland Protectorate) when they reach adulthood. Where there are no such indigenous systems, a chronology of events may have to be resorted to, as was done in the survey upon which this paper is based.

[1] I am grateful to Dr. M. Fortes and Dr. M. Gluckman of the Institute of Social Anthropology, Oxford, to Mr. J. A. Barnes of the Rhodes-Livingstone Institute, and to Dr. Enid Charles, Central Statistical Officer, Birmingham City Council, all of whom have read the draft of this paper and suggested some improvements. The responsibility for the calculations and the statements made in it is, however, entirely mine.

[2] R. R. Kuczynski, *Colonial Populations*, London: Royal Institute of International Affairs (1937). Part has been reprinted in *Rhodes-Livingstone Journal*, no. 2 (Dec. 1944), as 'Population Movements: The Contribution of Demography to the Study of Social Problems', pp. 18 ff.

[3] Sonnabend draws attention to the value of such samples in I. Sonnabend, 'Demographic Samples in the Study of Backward and Primitive Populations', *South African Journal of Economics*, vol. ii (Sept. 1934).

[4] Some of the difficulties in conducting demographic surveys among non-literate peoples are recorded by Saul W. Dajani. In particular he recounts that after the Bedouins had agreed to give census information to the Palestine Administration they changed their minds and refused to do so when the Anglo-American Committee's report on Palestine was published. Saul W. Dajani, 'The Enumeration of the Beersheba Bedouins in May 1946', *Population Studies*, vol. i, no. 3 (Dec. 1947), p. 304.

6: Mitchell E-5 (1946-1947) 1949 FT7 Yao FT7

121 Often there is some cultural obstruction to the giving of information of certain types. The Yao, for example, will not readily mention the names of deceased persons. Often young children or people who themselves had no children are completely forgotten. Many polygynous men cannot remember the number of children that they have fathered.

114 121 Nevertheless, in spite of these and other similar difficulties, some investigators have been able to publish a certain amount of material bearing on the problem of the rate of increase of non-literate populations in Africa. All of them have been based on samples, though none of these could be considered statistically representative. Such studies in recent years include one in Southern Nigeria,[1] one from Tanganyika[2] based on a substantial sample of women, while M. Fortes has published some material on the Tallensi of the Gold Coast.[3] Schapera, incidentally to a larger study, has published some material on the Tswana of Bechuanaland Protectorate.[4]

The analysis of the Yakö by Enid Charles and C. Daryll Forde was mainly concerned with the calculation of the male net reproduction-rate, while the Culwicks and Schapera calculated female net reproduction-rates. Fortes considered both the male and female net reproduction-rates. The Culwicks have so far presented the most complete analysis of this type of material but were not able to classify their material into five- or ten-year age-groups, though they did use a wider age classification. The Culwicks, Fortes, and Schapera have all used the number of girls born to women now past child-bearing as an estimate of the female gross reproduction-rate. There are objections to this procedure which are outlined below.

121 In this paper an attempt is made to present in more detail some demographic material on an African non-literate people. The main object of the paper is to estimate the probable gross and net reproduction-rates prevailing at the moment in the areas studied. The data on which this paper is based were collected incidentally to a study of the social organization of the Yao people living in the Liwonde District of Nyasaland in Central Africa.[5] In this study a number of typical hamlets, varying from 5 to 50 or more dwellings, were visited and genealogies of the residents recorded. In 20 of these hamlets further details were secured on points of demographic interest. Each census in a village took a day or two, and individual censuses were taken between November 1946 and March 1947. In this analysis of the material I have assumed that the survey was done at the end of 1946. The survey was conducted on a *de facto* and *de jure* basis in that the population who had slept in a hamlet the previous night was enumerated, but the mobility of the population is so high that usually it was necessary to consider a *de jure* count as constituting the true population of the village. The twenty hamlets studied were grouped in three areas, two in the area under N. A. Kawinga and one in N. A. Nyambi's area.

[1] Enid Charles and C. Daryll Forde, 'Notes on Some Population Data from a Southern Nigerian Village', *The Sociological Review*, vol. xxx, no. 2 (April 1938).

[2] A. T. and G. M. Culwick, 'A Study of Population in Ulanga, Tanganyika Territory', *The Sociological Review*, vol. xxx, no. 4 (1938), p. 363, and vol. xxxi (1939), no. 1, p. 25.

[3] M. Fortes, 'A Note on the Fertility among the Tallensi of the Gold Coast', *The Sociological Review*, vol. xxxv, nos. 4–5 (July–Oct. 1943).

[4] I. Schapera, *Migrant Labour and Tribal Life*, London: Oxford University Press (1947), pp. 20 ff.

[5] This study was conducted as part of the Rhodes-Livingstone Institute's comparative study of the social organization of some Central African tribes. I am grateful to the Trustees of the Institute and to the Director, Dr. E. Colson, who have given me permission to publish this material.

6: Mitchell E-5 (1946-1947) 1949 FT7 Yao FT7

They do not form a representative sample though they were casually selected for study and are fairly well scattered in the district in which they are situated. 125

In all there were 762 men, women, and children normally resident in the hamlets. This represents about 1·2 per cent. of the total population of the area. By normally resident, I mean that these people are considered to be members of the hamlets, and if they were absent, were away on only short visits of, say, about a month. 162

I have thus counted polygynists as normal members of the hamlets, but have taken care to ensure that they were not included again if their second wives were in another hamlet of the groups studied. Men, women, and their children who had gone outside the area to seek work, for example, were not included. 125

The ages of all members of the population were estimated by relating the birth of the individual to some notable event, the date of which is known. In these hamlets it was always possible to find some old relative who could place the birth of younger people as occurring between notable events. After the two dates between which the birth occurred had been fixed, it was then possible to fix the date of birth more accurately by asking the older people to indicate the approximate size of the child at subsequent events, by picking out a suitably sized child in the village.

The following is the skeleton chronology used in this survey. 125 175

1870 Migration of Kawinga group from Kongwe Hill.
1881 First attack by the Makwangwara Angoni.
1884 Second attack by the Makwangwara Angoni.
1895 British attack on Mount Chikala, the stronghold of Kawinga.
1896 British attack on Mount Mangoche, the stronghold of Jalasi.
1905 Death of Kawinga of the Anthill.
1907 The departure of Mr. Hoare, Collector of Revenue, from the Chikala Station.
1908 Small-pox epidemic.
1913 Government regulations about the number of huts to a village (District Administration (Natives) Ordinance, 1912).
1914 Commencement of the First World War. This is a notable event because of the fighting in German East Africa, in which many Nyasaland African troops took part. Also many men were used as porters carrying war goods from the railhead to Fort Johnston on Lake Nyasa.
1918 End of First World War.
1919 Influenza epidemic.
1921 General famine. This is known locally as *zala za Jim*, lit. 'the hunger of Jim'. Jim was an African Government clerk whose duty it was to dispense food to the starving populace.
1930 The coming of the famous *mchape* witchfinders. These people, trading on the beliefs of the population, induced practically the entire people to drink a potion to protect themselves from witchcraft. It is a most memorable event in the history of the area.[1]
1933 The introduction of Indirect Rule.
1940 The commencement of recruiting for the Second World War. The Liwonde district supplied a good proportion of men for the Army.
1946 End of the Second World War, i.e. the return of the soldiers.

The important thing about such a chronology is that the events should be deeply 121 125

[1] For details of this movement which is had penetrated to Northern Rhodesia, see A. I. Richards, 'A Modern Movement of Witchfinders', *Africa*, vol. viii (1935), pp. 448-61.

6: Mitchell E-5 (1946-1947) 1949 FT7 Yao FT7

121 impressed on people's memories and remembered by most of the people. Thus it
125 was desirable to find a useful reference date between 1930 and 1940. It might be thought that the death of King George V would be memorable. However, though all who were old enough at the time could remember the witchfinders, only a few could remember the death of King George.

125 This skeleton chronology was filled in by events of more local significance. For example, Kawinga's brick house was built in 1929, the present Nyambi succeeded in 1933, &c. In addition, in particular hamlets there were men who had been in the Army, or had been to work in South Africa or Southern Rhodesia. Usually they could recall the date of going and sometimes of return, though they may have lost count of the intervening years. Such dates were often useful points. A small minority had actually recorded the dates of birth and death of children.

In addition to this, it was possible to fix the ages of the young children by reference
805 to harvests, since the Yao reckon two years in retrospect, 'last year' meaning before the last harvest and 'the year before last' meaning the period before the harvest before last. Before the year before last, all time is merely *kale-kale*, the only indication of the period being the pitch of the voice in which it is said or the presence or absence of an exclamatory 'E!' before speaking.

125 Particular care was taken to secure the ages of women and the dates at which they had borne children. There was, as mentioned above, some reticence in mentio-
[124] ning the names of dead children, but this was usually met successfully by questioning the women's male relatives who were generally more communicative on these points.
[128] In spite of the care taken to obtain this information, it was impossible to fix the ages of six women in the sample, and they have been excluded from the major part of the analysis. In addition, there were thirty-nine men who were not available for questioning. These were all adults, the husbands of women in the hamlets. The
105 Yao are matrilineal and matrilocal, and men tend to spend much of their time away from the hamlet of their relatives-in-law. Since they are in many ways strangers in the hamlets no information could be obtained about them.

2. The General Background to Fertility

All the hamlets visited were occupied by members of the Yao tribe. The Yao are an Islamized people who achieved the questionable distinction of being efficient slave raiders at the end of the nineteenth century. They are a matrilineal and pre-
[361] dominantly matrilocal people living in ha[illegible] of from about 5 to 100 huts or more.

[582] Table I. *Age of Women at First Marriage*

Age of women at first marriage													
Age of husband at first marriage	12-13	14-15	16-17	18-19	20-21	22-23	24-25	26-27	28-29	30-31	Over 31	Total	Median age of first marriage
Under 30	5	6	5	18	9	4	1	3	..	..	..	55	16·7
30–45	4	6	7	11	6	4	1	3	..	1	3	45	16·3
Over 45	..	2	1	5	8	3	1	2	..	1	..	23	18·6
Totals	9	14	13	34	21	11	3	8	..	2	3	123	17·0

9:Lawson Y-5 (ca. 1940)1949 FT7 Yao FT7
MARAVI FR4
[P.180B]

Acknowledgements are due to many African friends who have freely given me information, and especially to Mr. Bennett Malekebu.

Y
M
101
131
M
[197]

THE present Bantu population of the Shiré Highlands in South Nyasaland consists of four major groups :

1. The Nyanja tribe, the country's earliest known inhabitants, whose language is closely allied to that of the Sena and Tete people on the Zambesi and the Senga on the Luangwa, but whose origin is uncertain. In 1858 Livingstone found various branches of this tribe settled throughout South Nyasaland.

Y
[175]

2. The Yao tribe, numbers of whom between 1860 and 1870 were driven southwards from their home in Portuguese East Africa by the neighbouring Amakua 'Waloo. These fugitive Yao fell upon the unwarlike Nyanja, conquered and subjugated their chiefs, and finally settling among them, intermarried to a certain extent.

3. A sprinkling of Ngoni, that branch of the Zulu whose flight from Chaka, wanderings in East Africa and ultimate settlement in Nyasaland and Portuguese East Africa, are familiar history. In the Shiré Highlands Ngoni are found only in small scattered groups, for their real home is the "Angoni Highlands" of central Nyasaland.

4. Recent immigrants from various tribes in Moçambique, given by Nyanja and Yao the indiscriminate name of "Lomwe", (i.e., possibly, "people from Lomwe Hill") or more rudely, "Ngoru", (i.e. "people who speak indistinctly, like drunkards").

Y
M
[174]
[131]
101

This study was made in the district around Zomba and deals exclusively with the Nyanja and Yao TRIBES, WHO THERE PREDOMINATE

For the most profound influence comes from Europe. Modern large-scale economics engulfing primitive small-scale economics, legislation by Protectorate Government, contact with Christian Missions and with European ways of life and thought—these together are shaking Nyanja and Yao society to its foundations. Constructive elements they do, of course, contain, but rebuilding on the ruins has hardly begun. In order to understand the present with its problems and promises for the future, we must know something of the past ; the traditional Nyanja and Yao relationship system is the key to this past which I would try here to put into your hands. It is not yet too late to grasp. The greatest changes began within living memory, and where village and family life has been revolutionized, relationship terms are still untouched. Hence, if we study the more conservative members of the tribes in the light of these terms, we should be able to piece together a fairly accurate outline picture of their original society. I make no attempt here to analyse in detail their relationship system : a study of the mutual responsibilities and interdependencies inherent in it, and the changes it is now undergoing, would require many years, and its results fill a large volume. This paper may, I hope, serve as an introduction to another's study, made before it is too late.

Nyanja society differs from any modern European social group in three ways : it is matrilineal ; it is matrilocal ; by the traditional practice of bilateral cross-cousin marriage, (i.e. marriage to the daughter of one's mother's brother, or, equally, of one's father's sister) its ties of blood and affinity have become interdependent.

Our English society, like that of the pure Ngoni, is patrilineal, the child belonging primarily to its father's family and the son inheriting wealth, social status and sometimes political power from his father. The Nyanja child, on the other hand, belongs primarily to its mother's group ; a boy inherits social and political status from his mother's brother, and a girl from her maternal grandmother. These relatives on the mother's side arrange the children's marriages and have throughout life more authority and

11: Sanderson D-5 (ca. 1920) 1920 FT7 Yao FT7

RELATIONSHIPS AMONG THE WATAO.

By Meredith Sanderson,
Medical Officer, Nyasaland Protectorate.

Introductory.—Various writers have attempted to give English equivalents to the Yao terms describing relationship, or have alluded to the outstanding features of the system, but I am not aware that anybody has hitherto worked out the whole system. [12]

Although it is very similar to other classificatory systems, I feel that a description of it may not be quite valueless, more especially on account of the evolutionary changes that are taking place.

The WaYao are a Bantu tribe, exogamous but not totemic, which until the middle of the last century inhabited that part of Central Africa lying to the East of Lake Nyasa, particularly in the valleys of the Lujende and Rovuma rivers. Up to that time the tribe had not extended far from the area indicated except perhaps in a northerly direction, but owing to constant intercine war in their own territory the Yaos then invaded and conquered a large part of the neighbouring territories, especially to the south, in what is now called Nyasaland. [10] [3]

I have said that the WaYao are not totemic, and that statement is correct at the present time. Opinions differ, however, as to how recent their loss of totemism is; though their initiation ceremonies are generally regarded as totemic, even there, in my opinion, the evidence is not conclusive, and there remains no suspicion of totemism outside those ceremonies. [9]

It should be mentioned that Islam is much more prevalent among the Yaos than among their neighbours, but its influence is not yet so deep-rooted as greatly to obscure the pure tribal customs, except to a certain extent among the rising generation. [19]

To facilitate description the relationships are given in tabular form, the relationship being given with reference to one man or woman. [28]

In Table I, Column 1 describes the relationship, Column 2 gives either the nearest equivalent of the Yao term, or, if none, the actual term. Columns 3-6 give the various relations of the person named in Column 1, as they would be named by the man or woman under consideration. [6]

For example, the brother of (a)'s father (Column 1) is regarded as (a)'s father (Column 3), the wife of (a)'s father's brother is (a)'s aunyo (Column 3), their child a his "brother" or "sister" (Column 4), and so on (see Table I).

The alternative term, *ama*, common to nearly all Bantu languages, is usually reserved for "own father," but not always. G01

Latterly, though the relationship is really always, the husbands of a man's "daughters" or "grand-daughters" are called *atati* —in a complimentary sense, not of course in defining relationship.

The word *ahanga* is rapidly falling into desuetude for men, and is, nowadays, never used in speaking to a man of that relationship, though used freely as a mode of address to women.

Amao (or *ankilulu-amapa*, *-ama*, etc., "my, his mother") may be further defined as "great" or "little" in the same manner as *atati*.

The parents of any *atati* or *ama*, and those of one's wife are called *ankoje* ("grandparent"). Great-grandparents are specified as "father" or "mother of my grandfather (or mother)."

The founder of a family is called *Likolo*, especially in prayer—except for the [illegible] representative gods obviously the same word as *Nzoyolo*," a parent," which includes all "fathers" and "mothers."

It is curious in this connection that a name for little girls in general, if one does not know their real name, is *ekilulu*. All these words seem to be derived from *ululu* ("here," "present"), and refer, probably, either to actual or potential possession of offspring.

Ankwangolo are distinguished as "male" or "female" according as they belong to the father's or mother's side—irrespective of their own sex.

Conclusion.—The Yao nomenclature of relationships, bearing as it does the evidence of former group marriages, is, like other classificatory systems, gradually changing in conformity with the development of the race, so that it can be used to express consanguinity; Rivers has, I believe, called attention to this process. G01 [illegible] [illegible]

The Yao custom—now dying out—of lending one's wife to a visitor (usually a close friend) may be a survival of ideas carried on from communal marriage, though such a privilege is never given to a relative. [illegible] [illegible]

In the same way's case who has had no children (a great stigma) may request his friend to help him—he will never ask a relative—and all of the three parties will keep the secret of the true paternity of any children resulting. [illegible] [illegible]

In many tribes the marriage of brother and sister, or a man with his sister's child, is permitted to compensate for the law by which a man's property goes to the son of a stranger, but nothing of the kind is allowed among the Yao. Indeed, they view any incestuous union with particular horror, and such must be very rare. I have heard of a case of a man committing incest with the idea that he would thereby become endued with supernatural power, but all he gained was ostracism; in the old days he would have been burned. [illegible] [illegible]

2: Mitchell E-5 (1946-1949) 1956 FT7 Yao FT7

121 But I have used illustrative material from other villages where it was more complete or less confusing. In Appendices, I set out genealogies, hut censuses, and plans, of the two villages. In the text I use reference numbers in these genealogies, by generation and position in generations, to identify people.

It is necessary to select illustrations because the structural uniformities I wish to describe are often hidden by the idiosyncrasies of particular examples. The general principles of social structure, as I present them here, have been abstracted from my observations over a period of two years, not only in Cikoja and Ali Kasunka villages, but in many others in the Machinga area. I present my illustrations not with any belief that they prove my analysis, but only to help the reader set the principles I describe in the reality of Yao life.

The Field Work

123 I spent the first two weeks of my stay in Nyasaland talking over my proposed field work with the Administrative officers of the Nyasaland Government. The Provincial Commissioner suggested that I should do a round trip of the Yao area with the District Commissioner at Zomba. After this tour, in consultation with Chief Kawinga and the District Commissioner, I decided that the best place for me to start would be in Chief Chiwalo's area. The District Commissioner then took me to Chiwalo who indicated a site in his court-village where I could pitch my tent.

124 For the first week I held meetings with the chief and some of the older men of the vicinity and spent most of my time making notes on material culture, 'customs' and history. On the first page of my notes I find that there is a good description of Yao beliefs in sorcery, all described as if it were in the past: a full year was to pass before my informants were prepared to admit that these beliefs were still held. After a week or two of this 123 general activity I decided to try my first village census. The 125 results were hardly encouraging. Often when villagers knew 203 I was coming they slipped away into the bush. Those who were left frequently refused steadfastly to answer my questions. Many rumours arose to explain my presence. I heard, for example, that I had been sent by the Government to record the names of those to be taken away as soldiers for the next

2: Mitchell E-5 (1946-1949) 1956 FT7 Yao FT7

war. I heard that I was an American spy, and also that I was a spy for the Portuguese, because Nyasaland, or at least the Yao area of it, was going to become part of Mozambique. I spent much of my enforced idleness during these early months copying down texts in Yao from my clerk and translating them into English.

Towards the end of 1946, when the rains had set in, I decided to move into a vacant house on a tobacco market about five miles from where I had first pitched my tent. I then started to make a census of the nearest village. Here the attitude of the people was markedly different and I established friendly and happy relationships with them. For some weeks I systematically made censuses of the surrounding villages, and got my first insight into the structural principles of Yao villages. I left this area to attend a conference of research officers of the Institute, and when I returned I pitched my tent in the village into which my personal servant had married. By this time I was speaking some of the language and had started to talk to people directly. I now began to establish a set of informants who would come to my tent in the afternoons and dictate texts to me in Yao on various topics of interest, which I immediately translated into English. The mornings I spent out in neighbouring villages. It was during this period that I gradually heard about the various ceremonies that were being performed and was able to attend them. My wife too was able to attend some of the women's ceremonies. Some months later I moved down to Kawinga's area and pitched my tent in one of the largest and most complex villages I could find and made a complete census of it. I chose this village so that it would be sufficiently close for me to attend Kawinga's court, which was the largest in the area. I left the field in September 1947, and in September 1948 returned to Chiwalo's village. I now engaged a new clerk who could speak no English and who came from the village in Chiwalo's area where I had originally settled. During my second trip I visited Jalasi, Kanali and Kalembo chieftaincies, all in different parts of the Yao country, and made village censuses in each.

The procedure I adopted in making village censuses was as follows. Usually I visited the headman a day or so in advance to explain my intention to him. Most of the villages I studied were fairly close to that in which I was camped so that the people

7:Hetherwick M-S (ca.1900) 1902 F77 Yao F77

SOME ANIMISTIC BELIEFS AMONG THE YAOS OF BRITISH CENTRAL AFRICA.

By the Rev. Alexander Hetherwick, M.A., F.R.G.S., of the Blantyre Mission, British Central Africa.

The original home of the Yao tribe may be roughly described as the large and lofty plateau which lies to the east of Lake Nyasa, and is bounded by the Rivers Rovuma and Lujenda. Forty years ago, about the time that Livingstone first entered the country, they began to be pressed on the north by the Magwangwara, and on the east by the Makowa tribes. These invasions caused them to move, some westward down to the shores of Lake Nyasa or the banks of the Upper Shire River, and others southward to the Shire Highlands, Mount Zomba and the eastern slopes of Mount Mlanje. In every case they succeeded in either subjugating or expelling the original Marori or Mang'anja inhabitants of these districts, and in no case have they lost their own independence.

Till about fifty or sixty years ago the Yaos were untouched by any external influences, and when at that time the Arab and coast traders from Kilwa and Zanzibar began to trust and trade with them they appear to have been little affected by contact with these visitors. Only a few of the younger men, and at following Mohammedan tenets, and these only grafted on to their still cherished belief in the old fables of their fathers. The Koran, or a few of its texts, was added to the many other charms they had already hung about their necks. The faith which the first missionaries found them in possession of when they entered the country twenty-five years ago may therefore be held to be the unadulterated creed of the tribe from time immemorial.

The foundation of the Yao religion is to be found in the Roho, the soul, ghost or spirit which every human being possesses, and which is the inspiring agent in his life. They profess to give no definite description of the nature or characteristics of this soul. In their minds however it is allied with the shadow, and would seem to bear to the body the relation which a picture has to the reality. Their word for a shadow is ulwili, which is also the term that they use to denote a picture, and pictures they associate with the shadow or shadows of the dead. I have known natives refuse to enter a room where pictures were hung on the walls "because of the wanda, ants, which were in them." The photographic camera was at first an object of dread, and when it was turned upon a group of natives they dispersed in all directions with shrieks of terror. "The Europeans,"

they said, "we shall be able to take away their shadows and they would die." In their mind the finder was allied to the shadow or picture, and the removal of it to the photographic plate would cause the disease or death of the shadow body.

As an instance of their faith in the close relationship of the finder and the picture or shadow, I may relate the following incident. An influential Tao chief on Mount Ramba with whom I was on terms of intimate friendship for years, refused to allow himself to be photographed, fearing the consequences on his life. At last I was able to persuade him to give me a sitting, but on the sole condition that the picture was to be shown to none of his subjects but to be sent out of the country as soon as possible. He feared lest some ill-wisher might use it as a means towards his bewitchment. Some months afterwards the chief became seriously ill, and in the minds of his attendants his illness was attributed to some accident having befallen the photographic plate on which they believed the picture of their chief to be imprinted. If that negative had been broken in England, whither it had been sent, their chief's illness would be accounted for. Accordingly they appealed to the divining oracle, who, however, after consulting the "bete," assured them that the picture was intact, and that in consequence the disease must be ascribed to some other cause.

The finder or soul is recognized as the chief agency in dreams. To dream is, in the Tao tongue, *kangawila* wanda, where wanda is the plural form of finder. The finder is supposed to go out and visit the scenes and persons it dreams about, and in turn is visited by the wandas of others, dead or living. Pains in the body on rising from sleep in the morning are usually attributed to such nocturnal visits, while disease or pains of a severe type are ascribed to malignant by the whips of the wandas or more frequently of the witches who prowl around during the night watches.

Madness, idiocy and the ravings of delirium or disease are accounted for by a similar agency. The sufferers are as wandas, they of the spirits, and a sudden fit of epilepsy or insanity is described as *gakawila* wanda, the spirits have seized him. Such persons are usually regarded with awe, as living in close contact with the unseen, but no lacerations or mutilations are ever used to expel the spirit in possession. Some native doctors are credited with a knowledge of certain medicines which they say are effectual in such cases, but their application in no way differs from those employed in treating ordinary types of disease. Idiots and *the insane are allowed to wander at will* about the village, and only when violent symptoms show themselves as a danger to the community in any physical restraint put upon them.

The wandas are also recognized as the inspiring agencies in the ravings of the witch detective. This person, usually a woman, is called in to discover who is the guilty agent in cases of mysterious deaths or outbreaks of an epidemic at a village. She arrives on the scene and takes up her abode for a few days previous to her actual demonstration. She mixes with the people, learns all the scandal and gossip of the community, and at night prowls about the houses searching for

2: Mitchell E-5 (1946-1949) 1956 FT7 Yao FT7

121 But I have used illustrative material from other villages where it was more complete or less confusing. In Appendices, I set out genealogies, hut censuses, and plans, of the two villages. In the text I use reference numbers in these genealogies, by generation and position in generations, to identify people.

It is necessary to select illustrations because the structural uniformities I wish to describe are often hidden by the idiosyncrasies of particular examples. The general principles of social structure, as I present them here, have been abstracted from my observations over a period of two years, not only in Cikoja and Ali Kasmka villages, but in many others in the Machinga area. I present my illustrations not with any belief that they prove my analysis but only to help the reader set the principles I describe in the reality of Yao life.

The Field Work

123 I spent the first two weeks of my stay in Nyasaland talking over my proposed field work with the Administrative officers of the Nyasaland Government. The Provincial Commissioner suggested that I should do a round trip of the Yao area with the District Commissioner at Zomba. After this tour, in consultation with Chief Kawinga and the District Commissioner, I decided that the best place for me to start would be in Chief Chiwale's area. The District Commissioner then took me to Chiwale who indicated a site in his court-village where I could pitch my tent.

124 For the first week I held meetings with the chief and some of the older men of the vicinity and spent most of my time making notes on material culture, 'customs' and history. On the first page of my notes I find that there is a good description of Yao beliefs in sorcery, all described as if it were in the past: a full year was to pass before my informants were prepared to admit that these beliefs were still held. After a week or two of this 123 general activity I decided to try my first village census. The 125 results were hardly encouraging. Often when villagers knew 203 I was coming they slipped away into the bush. Those who were left frequently refused steadfastly to answer my questions. Many rumours arose to explain my presence. I heard, for example, that I had been sent by the Government to record the names of those to be taken away as soldiers for the next

2: Mitchell E-5 (1946-1949) 1956 FT7 Yao FT7

war. I heard that I was an American spy, and also that I was a spy for the Portuguese, because Nyasaland, or at least the Yao area of it, was going to become part of Mozambique. I spent much of my enforced idleness during these early months copying down texts in Yao from my clerk and translating them into English. 123 125 203

Towards the end of 1946, when the rains had set in, I decided to move into a vacant house on a tobacco market about five miles from where I had first pitched my tent. I then started to make a census of the nearest village. Here the attitude of the people was markedly different and I established friendly and happy relationships with them. For some weeks I systematically made censuses of the surrounding villages, and got my first insight into the structural principles of Yao villages. I left this area to attend a conference of research officers of the Institute, and when I returned I pitched my tent in the village into which my personal servant had married. By this time I was speaking some of the language and had started to talk to people directly. I now began to establish a set of informants who would come to my tent in the afternoons and dictate texts to me in Yao on various topics of interest, which I immediately translated into English. The mornings I spent out in neighbouring villages. It was during this period that I gradually heard about the various ceremonies that were being performed and was able to attend them. My wife too was able to attend some of the women's ceremonies. Some months later I moved down to Kawinga's area and pitched my tent in one of the largest and most complex villages I could find and made a complete census of it. I chose this village so that it would be sufficiently close for me to attend Kawinga's court, which was the largest in the area. I left the field in September 1947, and in September 1948 returned to Chiwalo's village. I now engaged a new clerk who could speak no English and who came from the village in Chiwalo's area where I had originally settled. During my second trip I visited Jalasi, Katuli and Kalembo chiefdoms, all in different parts of the Yao country, and made village censuses in each. 123 [125] [124] 125 124

The procedure I adopted in making village censuses was as follows. Usually I visited the headman a day or so in advance to explain my intention to him. Most of the villages I studied were fairly close to that in which I was camped so that the people

2: Mitchell E-5 (1946-1949) 1956 FT7 Yao FT7

125 knew as a rule what information I wanted. On an appointed day I went to the village in the early morning. My first task
● 124 was to make a rough sketch of the position of the huts and to number them. Then with the aid of some of the men of the village (who were usually the wardens of sorority-groups) I went from hut to hut completing a Rhodes-Livingstone Institute standard census form for each adult person who lived in the hut. Later I found that if I completed the census forms for certain key personalities who were dead, I could sometimes construct most of the genealogy of the village without having to question the headman any further. More commonly, however, especially in the larger and more complex villages, I found that it was necessary for me to meet the headman and some of the older men afterwards to complete the genealogy of the village. When I did this it was customary for the men of the village to gather in the common shelter or around me under the verandah of the hut where I was working. The women were not invited near, at least at the beginning of the interview. Soon, however, the men became more and more confused. At some stage or other they would begin shouting questions over to the women, who were sitting discreetly under the verandah of an adjoining hut or in the shade of a conveniently close tree, from where they could hear the proceedings. Eventually, almost without fail, the older women were brought closer and the difficulties straightened out. In time I became accustomed to this procedure and accepted the fact that the first genealogy would have to be discarded and a second made later with the help of the women.

It was during the house-to-house census that many valuable
125 leads emerged. During the census-taking, for example, unusual types of marriage with kinsmen appeared which I was able to follow up immediately in terms of an actual case history; or, if it were likely to be embarrassing at that moment, I noted it down and made specific enquiries later, for the census-taking was usually done in public.

The quantitative material presented in Chapter IV on Prestige
124 and Rank among Village Headmen was collected at the chief's
126 court. I worked with the chief's tax-clerk and one or two of the chief's councillors. We worked through the tax-register, and the councillors answered a set of questions about each village headman. In two areas the chiefs called the village head-

2: Mitchell E-5 (1946-1949) 1956 FT7 Yao FT7

men into a public meeting and each answered the questions personally. Where the information was not known, I made special enquiries to obtain it. Later I transferred this information on to small cards which I subsequently used in the statistical analysis. During my survey of Malemia chiefdom I was able to employ six African clerks whom I trained to record genealogies. They surveyed a 20 per cent random sample of villages in the chiefdom. The material from these genealogies has been transferred to Hollerith cards for statistical analysis at some future date. During this period, Mr. Carrall Wilcocks, who was then Agricultural Instructor at the Jeanes' School, and I were able to make a map with chain and compass of every garden cultivated by members of a large village. While the general results of this study have been included here, a detailed analysis is still to be made.

The material used in the chapters which deal with the pre-White times has been derived mainly from the published works quoted in the Bibliography. I was also able to consult records in the Central African Archives. By permission of the Nyasaland Government I was allowed to read through the District Books at Fort Johnston and Zomba, and through some of the files which contained information collected by early District Officers. I was also able to consult the detailed returns of the 1945 Census at the District Commissioner's office in Zomba. The Agricultural Officer at Fort Johnston, under whose jurisdiction the area where I was working fell, was kind enough to let me read some reports and to give me statistics of sales of tobacco and other agricultural produce at the Government-controlled markets, as well as details of rainfall and temperature.

The ideas in this book have been developed in a number of Rhodes-Livingstone Institute staff conferences and at seminars at Oxford. During a preliminary period of writing at Oxford between September 1947 and August 1948 I prepared the manuscript of what was later to become my contribution to the symposium *Seven Tribes of British Central Africa*. I cannot overemphasize the importance of this essay in setting the problems examined in this book and in clarifying my approach to them. It brought home to me more than anything else the truth in the aphorism: the hardest part of field work is writing it up.

3: Stanner D-5 (ca. 1912) 1922 FT7 Tao FT7

code of morals is imported which is far reaching for the social welfare. Macdonald makes the statement that " when a girl is initiated, she must find some man to be with her on her return; otherwise she will die." [1] Speaking with reserve as to what happened among the Amangoche around Blantyre Mission thirty years ago, I believe that no such practice is or was part of the Machinga Yao ceremonies. I have heard similar stories from other Europeans but I am inclined to discredit the whole idea as a practice among any section of Yao. Of the Anyanja, I cannot speak with the same conviction. Similarly I believe that the practice of artificial dilatation of the vagina is foreign to the Yao though possibly introduced in some places from the Swahili.

At *Lupanda* and *Chipoto*, the youth have to undergo a good deal of hardship which is all for their benefit, but year by year, as civilisation progresses, greater numbers forego these ceremonies. Their manners and morals suffer in consequence, and one is forced to acknowledge with the " old people " that the younger generation, decked in European clothes, with an air of smug self-conceit, no longer shows that decorum and self-respect which characterise the older, unsophisticated natives. My experience with regard to the attitude of natives to their initiation ceremonies differs from those related in *Africanus* and I am afraid that Macdonald's native friends [2] were laughing at the inquisitiveness of the white man and not at their own experiences.

In the *Journal of the Royal Anthropological Institute* for 1913,[3] Dr. Davey and I gave a short account of part of the ceremony at *Lupanda*. Since then, through the friendliness of some of the chiefs in Ruaha district, I have been present at several more ceremonies. I have collected a number of fresh observations and made a complete set of sketches of the dagga or images in relief made on the ground at one of these ceremonies. I have also a complete account of the boys' ceremonies from a celebrated master of ceremonies or *n'mbidile* as he is called, named Mbonda (Kampika) of *Chwakumbu*, *in his own words*, with his own songs. In writing down the songs, I have simply recorded the words, without giving the many full and partial repeats, and I have never attempted to score down the airs to which they are sung.

In the account given below I shall follow Mbonda's practice, giving such variations as I myself have observed. It will be understood that each *n'mbidile* has his own way of doing things so that there may be many variations in detail.

Lupanda: Every year, a certain number of boys in a group of villages reach the age at which the ceremony is commonly performed. In response to requests made by the village headmen, the chief appoints a date on which the *mpango* shall be held; this is usually towards the end of the dry season (September) but before the long grass of the bush has been burnt, as this affords the ceremony privacy to those taking part.

[1] Op. cit., vol. 2, p. 100. [2] Ibid., p. 100.

[3] H. S. Stanner and J. B. Davey, "The initiation ceremony for boys among the Yao of Nyasaland", (from Audio Gen, London, 1913), vol. 43, p. 139-150.

121 depended on people's memories and remembered by most of the people. Thus it
125 was desirable to find a useful reference date between 1930 and 1940. It might be thought that the death of King George V would be memorable. However, though all who were old enough at the time could remember the witchfinders, only a few could remember the death of King George.

125 This skeleton chronology was filled in by events of more local significance. For example, Kawinga's brick house was built in 1929, the present Nyambi succeeded in 1933, &c. In addition, in particular hamlets there were men who had been in the Army, or had been to work in South Africa or Southern Rhodesia. Usually they could recall the date of going and sometimes of return, though they may have lost count of the intervening years. Such dates were often useful points. A small minority had actually recorded the dates of birth and death of children.

In addition to this, it was possible to fix the ages of the young children by reference
805 to harvests, since the Yao reckon two years in retrospect, 'last year' meaning before the last harvest and 'the year before last' meaning the period before the harvest before last. Before the year before last, all time is merely *kale-kale*, the only indication of the period being the pitch of the voice in which it is said or the presence or absence of an exclamatory 'E!' before speaking.

125 Particular care was taken to secure the ages of women and the dates at which they had borne children. There was, as mentioned above, some reticence in mention-
(127) ing the names of dead children, but this was usually met successfully by questioning the women's male relatives who were generally more communicative on these points.
(128) In spite of the care taken to obtain this information, it was impossible to fix the ages of six women in the sample, and they have been excluded from the major part of the analysis. In addition, there were thirty-nine men who were not available for questioning. These were all adults, the husbands of women in the hamlets. The
105 Yao are matrilineal and matrilocal, and men tend to spend much of their time away from the hamlet of their relatives-in-law. Since they are in many ways strangers in the hamlets no information could be obtained about them.

2. The General Background to Fertility

All the hamlets visited were occupied by members of the Yao tribe. The Yao are an Islamized people who achieved the questionable distinction of being efficient slave traders at the end of the nineteenth century. They are a matrilineal and pre-
(364) dominantly matrilocal people living in hamlets of from about 5 to 100 huts or more.

(582) TABLE 1. *Age of Women at First Marriage*

Place	Age of women at first marriage												
	[illegible]	[illegible]	[illegible]	[illegible]	[illegible]	[illegible]	[illegible]	[illegible]	[illegible]	[illegible]	[illegible]	[illegible]	[illegible]
Under 40	1	6	1	18	9	6	1	3	..	..	..	35	16·7
40–49	6	6	7	11	2	6	6	3	..	1	1	42	16·3
Over 49	..	2	1	1	8	3	1	2	..	1	..	23	16·6
Totals	7	14	15	30	19	12	8	8	..	2	1	100	17·0

2: Mitchell E-5 (1946-1949) 1956 FT7 Yao FT7

121 But I have used illustrative material from other villages where it was more complete or less confusing. In Appendices, I set out genealogies, hut censuses, and plans, of the two villages. In the text I use reference numbers in these genealogies, by generation and position in generations, to identify people.

It is necessary to select illustrations because the structural uniformities I wish to describe are often hidden by the idiosyncrasies of particular examples. The general principles of social structure, as I present them here, have been abstracted from my observations over a period of two years, not only in Cikoja and Ali Kasunka villages, but in many others in the Machinga area. I present my illustrations not with any belief that they prove my analysis, but only to help the reader set the principles I describe in the reality of Yao life.

The Field Work

123 I spent the first two weeks of my stay in Nyasaland talking over my proposed field work with the Administrative officers of the Nyasaland Government. The Provincial Commissioner suggested that I should do a round trip of the Yao area with the District Commissioner at Zomba. After this tour, in consultation with Chief Kawinga and the District Commissioner, I decided that the best place for me to start would be in Chief Chiwalo's area. The District Commissioner then took me to Chiwalo who indicated a site in his court-village where I could pitch my tent.

124 For the first week I held meetings with the chief and some of the older men of the vicinity and spent most of my time making notes on material culture, 'customs' and history. On the first page of my notes I find that there is a good description of Yao beliefs in sorcery, all described as if it were in the past: a full year was to pass before my informants were prepared to admit that these beliefs were still held. After a week or two of this 123 general activity I decided to try my first village census. The 125 results were hardly encouraging. Often when villagers knew 203 I was coming they slipped away into the bush. Those who were left frequently refused steadfastly to answer my questions. Many rumours arose to explain my presence. I heard, for example, that I had been sent by the Government to record the names of those to be taken away as soldiers for the next

2: Mitchell E-5 (1946-1949) 1956 FT7 Yao FT7

war. I heard that I was an American spy, and also that I was a spy for the Portuguese, because Nyasaland, or at least the Yao area of it, was going to become part of Mozambique. I spent much of my enforced idleness during these early months copying down texts in Yao from my clerk and translating them into English.

Towards the end of 1946, when the rains had set in, I decided to move into a vacant house on a tobacco market about five miles from where I had first pitched my tent. I then started to make a census of the nearest village. Here the attitude of the people was markedly different and I established friendly and happy relationships with them. For some weeks I systematically made censuses of the surrounding villages, and got my first insight into the structural principles of Yao villages. I left this area to attend a conference of research officers of the Institute, and when I returned I pitched my tent in the village into which my personal servant had married. By this time I was speaking some of the language and had started to talk to people directly. I now began to establish a set of informants who would come to my tent in the afternoons and dictate texts to me in Yao on various topics of interest, which I immediately translated into English. The mornings I spent out in neighbouring villages. It was during this period that I gradually heard about the various ceremonies that were being performed and was able to attend them. My wife too was able to attend some of the women's ceremonies. Some months later I moved down to Kawinga's area and pitched my tent in one of the largest and most complex villages I could find and made a complete census of it. I chose this village so that it would be sufficiently close for me to attend Kawinga's court, which was the largest in the area. I left the field in September 1947, and in September 1948 returned to Chiwalo's village. I now engaged a new clerk who could speak no English and who came from the village in Chiwalo's area where I had originally settled. During my second trip I visited Jalasi, Katuli and Kalembo chiefdoms, all in different parts of the Yao country, and made village censuses in each.

The procedure I adopted in making village censuses was as follows. Usually I visited the headman a day or so in advance to explain my intention to him. Most of the villages I studied were fairly close to that in which I was camped so that the people

2: Mitchell E-5 (1946-1949) 1956 FT7 Yao FT7

125 knew as a rule what information I wanted. On an appointed
124 day I went to the village in the early morning. My first task was to make a rough sketch of the position of the huts and to number them. Then with the aid of some of the men of the village (who were usually the wardens of sorority-groups) I went from hut to hut completing a Rhodes-Livingstone Institute standard census form for each adult person who lived in the hut. Later I found that if I completed the census forms for certain key personalities who were dead, I could sometimes construct most of the genealogy of the village without having to question the headman any further. More commonly, however, especially in the larger and more complex villages, I found that it was necessary for me to meet the headman and some of the older men afterwards to complete the genealogy of the village. When I did this it was customary for the men of the village to gather in the common shelter or around me under the verandah of the hut where I was working. The women were not invited near, at least at the beginning of the interview. Soon, however, the men became more and more confused. At some stage or other they would begin shouting questions over to the women, who were sitting discreetly under the verandah of an adjoining hut or in the shade of a conveniently close tree, from where they could hear the proceedings. Eventually, almost without fail, the older women were brought closer and the difficulties straightened out. In time I became accustomed to this procedure and accepted the fact that the first genealogy would have to be discarded and a second made later with the help of the women.

It was during the house-to-house census that many valuable
125 leads emerged. During the census-taking, for example, unusual types of marriage with kinsmen appeared which I was able to follow up immediately in terms of an actual case history; or, if it were likely to be embarrassing at that moment, I noted it down and made specific enquiries later, for the census-taking was usually done in public.

The quantitative material presented in Chapter IV on Prestige
124 and Rank among Village Headmen was collected at the chief's
126 courts. I worked with the chief's tax-clerk and one or two of the chief's councillors. We worked through the tax-register, and the councillors answered a set of questions about each village headman. In two areas the chiefs called the village head-

6: Mitchell E-5 (1946-1947) 1949 FT7 Yao FT7

121 Often there is some cultural obstruction to the giving of information of certain
[557] types. The Yao, for example, will not readily mention the names of deceased persons. Often young children or people who themselves had no children are completely forgotten. Many polygynous men cannot remember the number of children that they have fathered.

114 Nevertheless, in spite of these and other similar difficulties, some investigators
121 have been able to publish a certain amount of material bearing on the problem of the rate of increase of non-literate populations in Africa. All of them have been based on samples, though none of these could be considered statistically representative. Such studies in recent years include one in Southern Nigeria,[1] one from Tanganyika[2] based on a substantial sample of women, while M. Fortes has published some material on the Tallensi of the Gold Coast.[3] Schapera, incidentally to a larger study, has published some material on the Tswana of Bechuanaland Protectorate.[4]

The analysis of the Yakö by Enid Charles and C. Daryll Forde was mainly concerned with the calculation of the male net reproduction-rate, while the Culwicks and Schapera calculated female net reproduction-rates. Fortes considered both the male and female net reproduction-rates. The Culwicks have so far presented the most complete analysis of this type of material but were not able to classify their material into five- or ten-year age-groups, though they did use a wider age classification. The Culwicks, Fortes, and Schapera have all used the number of girls born to women now past child-bearing as an estimate of the female gross reproduction-rate. There are objections to this procedure which are outlined below.

121 In this paper an attempt is made to present in more detail some demographic material on an African non-literate people. The main object of the paper is to estimate the probable gross and net reproduction-rates prevailing at the moment
121.5 in the areas studied. The data on which this paper is based were collected incidentally to a study of the social organization of the Yao people living in the Liwonde District of Nyasaland in Central Africa.[5] In this study a number of typical hamlets, varying from 5 to 50 or more dwellings, were visited and genealogies of the residents recorded. In 20 of these hamlets further details were secured on points of demographic interest. Each census in a village took a day or two, and individual censuses were taken between November 1946 and March 1947. In this analysis of the material I have assumed that the survey was done at the end of 1946. The survey was conducted on a *de facto* and *de jure* basis in that the population who had slept in a hamlet the previous night was enumerated, but the mobility of the population is so high that usually it was necessary to consider a *de jure* census as constituting the true population of the village. The twenty hamlets studied were grouped in three areas, two in the area under N. A. Kawinga and one in N. A. Nyambi's area.

[1] Enid Charles and C. Daryll Forde, "Notes on Some Population Data from a Southern Nigerian Village", *The Sociological Review*, vol. xxxi, no. 2 (April 1938).

[2] A. T. and G. M. Culwick, "A Study of Population in Ulanga, Tanganyika Territory", *The Sociological Review*, vol. xxxi, no. 2 (1938), p. 181, and vol. xxxii (1940), no. 1, p. 25.

[3] M. Fortes, "A Note on the Fertility among the Tallensi of the Gold Coast", *The Sociological Review*, vol. xxxiv, no. 2-3 (July-Oct. 1942).

[4] I. Schapera, *Migrant Labour and Tribal Life*, London: Oxford University Press (1947), pp. 208 ff.

[5] This study was conducted as part of the Rhodes-Livingstone Institute's comparative study of the social organization of some Central African tribes. I am grateful to the Trustees of the Institute and to the Director, Dr. E. Colson, who have given me permission to publish this material.

They do not form a representative sample though they were casually selected for study and are fairly well scattered in the district in which they are situated. 125

In all there were 761 men, women, and children normally resident in the hamlets. This represents about 1·1 per cent. of the total population of the area. By normally resident, I mean that these people are considered to be members of the hamlets, and if they were absent, were away on only short visits of, say, about a month. 162

I have thus counted polygynists as normal members of the hamlets, but have taken care to ensure that they were not included again if their second wives were in another hamlet of the groups studied. Men, women, and their children who had gone outside the area to seek work, for example, were not included. 125

The ages of all members of the population were estimated by relating the birth of the individual to some notable event, the date of which is known. In these hamlets it was always possible to find some old relative who could place the birth of younger people as occurring between notable events. After the two dates between which the birth occurred had been fixed, it was then possible to fix the date of birth more accurately by asking the older people to indicate the approximate size of the child at subsequent events, by picking out a suitably sized child in the village.

The following is the skeleton chronology used in this survey. 125 175

1870 Migration of Kawinga group from Kongwe Hill.
1881 First attack by the Malwangwen Angoni.
1884 Second attack by the Malwangwen Angoni.
1895 British attack on Mount Chikala, the stronghold of Kawinga.
1896 British attack on Mount Mangoche, the stronghold of Jalasi.
1905 Death of Kawinga of the Anthill.
1907 The departure of Mr. Howes, Collector of Revenue, from the Chikala Station.
1908 Small-pox epidemic.
1913 Government regulations about the number of huts to a village (District Administration (Native) Ordinance, 1912).
1914 Commencement of the First World War. This is a notable event because of the fighting in German East Africa, in which many Nyasaland African troops took part. Also many men were used as porters carrying war goods from the railhead to Fort Johnston on Lake Nyasa.
1918 End of First World War.
1919 Influenza epidemic.
1921 General famine. This is known locally as *ndo so Jim*, lit. 'the hunger of Jim'. Jim was an African Government clerk whose duty it was to dispense food to the starving populace.
1930 The coming of the famous *mchape* witch-finders. These people, trading on the beliefs of the population, induced practically the entire people to drink a potion to protect themselves from witchcraft. It is a most memorable event in the history of the area.*
1933 The introduction of Indirect Rule.
1940 The commencement of recruiting for the Second World War. The Liwonde district supplied a good proportion of men for the Army.
1946 End of the Second World War, i.e. the return of the soldiers.

The important thing about such a chronology is that the events should be deeply 131 135

* For details of this movement which is had presented to Northern Rhodesia, see A. I. Richards, "A Modern Movement of Witch-finders", *Africa*, vol. viii (1935), pp. 448-61.

121 impressed on people's memories and remembered by most of the people. Thus it
125 was desirable to find a useful reference date between 1930 and 1940. It might be thought that the death of King George V would be memorable. However, though all who were old enough at the time could remember the witchdoctors, only a few could remember the death of King George.

125 This skeleton chronology was filled in by events of more local significance. For example, Kawinga's brick house was built in 1929, the present Nyambi succeeded in 1933, &c. In addition, in particular hamlets there were men who had been in the Army, or had been to work in South Africa or Southern Rhodesia. Usually they could recall the date of going and sometimes of return, though they may have lost count of the intervening years. Such dates were often useful points. A small minority had actually recorded the dates of birth and death of children.

In addition to this, it was possible to fix the ages of the young children by reference
105 to harvests, since the Yao reckon two years in retrospect, 'last year' meaning before the last harvest and 'the year before last' meaning the period before the harvest before last. Before the year before last, all time is merely *kale-kale*, the only indication of the period being the pitch of the voice in which it is said or the presence or absence of an exclamatory 'E!' before speaking.

125 Particular care was taken to secure the ages of women and the dates at which they had borne children. There was, as mentioned above, some reticence in mention-
(129) ing the names of dead children, but this was usually got successfully by questioning the women's male relatives who were generally more communicative on these points.
(129) In spite of the care taken to obtain this information, it was impossible to fix the ages of six women in the sample, and they have been excluded from the major part of the analysis. In addition, there were thirty-nine men who were not available for questioning. These were all adults, the husbands of women in the hamlets. The
105 Yao are matrilineal and matrilocal, and men tend to spend much of their time away from the hamlet of their relatives-in-law. Since they are in many ways strangers in the hamlets no information could be obtained about them.

2. The General Background to Fertility

All the hamlets visited were occupied by members of the Yao tribe. The Yao are an Islamized people who achieved the questionable distinction of being efficient slave traders at the end of the nineteenth century. They are a matrilineal and pre-
(364) dominantly matrilocal people living in hamlets of from about 5 to 100 huts or more.

(582) Table 1. *Age of Women at First Marriage*

Place	Age of women at first marriage												
	[illegible]	[illegible]	[illegible]	[illegible]	[illegible]	[illegible]	[illegible]	[illegible]	[illegible]	[illegible]	[illegible]	[illegible]	[illegible]
Under 40	1	8	1	18	9	6	1	1	—	—	—	35	18·7
40-49	4	6	1	11	2	6	1	1	—	1	1	34	18·1
Over 49	—	1	1	1	2	3	1	1	—	1	—	11	5·8
Totals	5	15	13	30	11	15	8	3	—	2	1	190	100

2: Mitchell E-5 (1946-1949) 1956 F77 Yao F77

125 knew as a rule what information I wanted. On an appointed
124 day I went to the village in the early morning. My first task was to make a rough sketch of the position of the huts and to number them. Then with the aid of some of the men of the village (who were usually the wardens of security-groups) I went from hut to hut completing a Rhodes-Livingstone Institute standard census form for each adult person who lived in the hut. Later I found that if I completed the census forms for certain key personalities who were dead, I could sometimes construct most of the genealogy of the village without having to question the headman any further. More commonly, however, especially in the larger and more complex villages, I found that it was necessary for me to meet the headman and some of the older men afterwards to complete the genealogy of the village. When I did this it was customary for the men of the village to gather in the common shelter or around me under the verandah of the hut where I was working. The women were not invited now, at least at the beginning of the interview. Soon, however, the men became more and more confident. At some stage or other they would begin shouting questions over to the women, who were sitting discreetly under the verandah of an adjoining hut or in the shade of a conveniently close tree, from where they could hear the proceedings. Eventually, almost without fail, the older women were brought closer and the difficulties straightened out. In time I became accustomed to this procedure and accepted the fact that the first genealogy would have to be discarded and a second made later with the help of the women.

126 It was during the house-to-house census that many valuable leads emerged. During the census-taking, for example, unusual types of marriage with kinsmen appeared which I was able to follow up immediately in terms of an actual case history; or, if it were likely to be embarrassing at that moment, I noted it down and made specific enquiries later, for the census-taking was usually done in public.

125 The quantitative material presented in Chapter IV on Prestige
124 and Rank among Village Headmen was collected at the chief's court. I worked with the chief's tax-clerk and one or two of the chief's councillors. We worked through the tax-register, and the councillors answered a set of questions about each village headman. In two areas the chiefs called the village head-

2: Mitchell E-5 (1946-1949) 1956 FT7 Yao FT7

men into a public meeting and each answered the questions 124
personally. Where the information was not known, I made 126
special enquiries to obtain it. Later I transferred this information on to small cards which I subsequently used in the statistical analysis. During my survey of Malemia chiefdom I was able to employ six African clerks whom I trained to record genealogies. They surveyed a 20 per cent random sample of villages in the chiefdom. The material from these genealogies has been transferred to Hollerith cards for statistical analysis at some future date. During this period, Mr. Carrall Wilcocks, who was then Agricultural Instructor at the Jeanes' School, and I were able to make a map with chain and compass of every garden cultivated by members of a large village. While the general results of this study have been included here, a detailed analysis is still to be made.

The material used in the chapters which deal with the pre- 127
White times has been derived mainly from the published works quoted in the Bibliography. I was also able to consult records in the Central African Archives. By permission of the Nyasaland Government I was allowed to read through the District Books at Fort Johnston and Zomba, and through some of the files which contained information collected by early District Officers. I was also able to consult the detailed returns of the 1945 Census at the District Commissioner's office in Zomba. The Agricultural Officer at Fort Johnston, under whose jurisdiction the area where I was working fell, was kind enough to let me read some reports and to give me statistics of sales of tobacco and other agricultural produce at the Government-controlled markets, as well as details of rainfall and temperature.

The ideas in this book have been developed in a number of 114
Rhodes-Livingstone Institute staff conferences and at seminars at Oxford. During a preliminary period of writing at Oxford between September 1947 and August 1948 I prepared the manuscript of what was later to become my contribution to the symposium *Seven Tribes of British Central Africa*. I cannot overemphasize the importance of this essay in setting the problems examined in this book and in clarifying my approach to them. It brought home to me more than anything else the truth in the aphorism: *the hardest part of field work is writing it up.*

2: Mitchell E-5 (1946-1949) 1956 FT7 Yao FT7

men into a public meeting and each answered the questions personally. Where the information was not known, I made special enquiries to obtain it. Later I transferred this information on to small cards which I subsequently used in the statistical analysis. During my survey of Malonda chieftdom I was able to employ six African clerks whom I trained to record genealogies. They surveyed a 20 per cent random sample of villages in the chieftdom. The material from these genealogies has been transferred to Hollerith cards for statistical analysis at some future date. During this period, Mr. Carroll Wilcocks, who was then Agricultural Instructor at the Jesuits' School, and I were able to make a map with chain and compass of every garden cultivated by members of a large village. While the general results of this study have been included here, a detailed analysis is still to be made. 125 Ok

The material used in the chapters which deal with the pre-White times has been derived mainly from the published works quoted in the Bibliography. I was also able to consult records in the Central African Archives. By permission of the Nyasaland Government I was allowed to read through the District Books at Fort Johnston and Zomba, and through some of the files which contained information collected by early District Officers. I was also able to consult the detailed returns of the 1945 Census at the District Commissioner's office in Zomba. The Agricultural Officer at Fort Johnston, under whose jurisdiction the area where I was working fell, was kind enough to let me read some reports and to give me statistics of sales of tobacco and other agricultural produce at the Government-controlled markets, as well as details of rainfall and temperature. 127

The ideas in this book have been developed in a number of Rhodes-Livingstone Institute staff conferences and at seminars at Oxford. During a preliminary period of writing at Oxford between September 1947 and August 1948 I prepared the manuscript of what was later to become my contribution to the symposium *Seven Tribes of British Central Africa*. I cannot overemphasize the importance of this essay in setting the problems examined in this book and in clarifying my approach to them. It brought home to me more than anything else the truth in the aphorism: the hardest part of field work is writing it up. 104

NOTE

[25 (a)] Where I have used abbreviations for kinship terms I have followed the Rhodes-Livingstone Institute convention:

M = mother	B = brother	H = husband
F = father	Z = sister	W = wife
D = daughter	S = son	C = sibling

Other symbols are built up on these, so that 'father's sister' is FZ and 'mother's father's sister's son's daughter's husband's brother' is MFZSSDHB. Seniority is indicated by a plus or minus, so that 'older brother' is + B and 'younger brother' is − B. I have used the combination XC to stand for 'cross cousin'.

NOTES ON SOME TRIBES OF BRITISH CENTRAL AFRICA.

By H. S. Shannon, M.B.

[Plate Plates XXVI, XXVII.]

With reference to what follows, I deal with the inhabitants of the southern end of Lake Nyasa, more especially those near Fort Johnston.

This people is very mixed, the original inhabitants, "Anyanja," belonging to Nyanja stock, one of the many branches of the Bantu, were many times overrun by invading waves from the east, Amangwaba, Ajawa (Tete), Mazitonga, Mawonga, and their territory at this point was also settled from the other side by the Angoni. Though the Mazitonga may be said to have settled here and be the ruling spirit, the people are more Anyanja than anything else, and their customs, etc., though suffering by being those of a conquered race, yet have survived in great part. These people are often called the Nyasa, only owning the dwellers near the Lake, but it is a good collective name now.

As far as possible these notes refer to Anyanja and their customs, and added matter and the elements have been eliminated; for this reason they will be found to differ in some ways from accounts given by others.

Of the average native one may say that his physique is very fair; given regular work and food, conditions such as exist on some of the boats, he develops into a very fine muscular man. A man will carry between 55lb and sixty pounds weight in one day, or a number of days in succession covering half that distance per diem. A man would carry 50 to 60 miles in twenty-four hours. The man travel the whole day without food, and would do three or four days' march unloaded without food provided he had water to drink.

Sensibility to pain is undoubtedly less than in the Europeans, i.e., the native can stand pain well. If he be cut about (e.g., removal of cancerous eye without anæsthetic, extraction of teeth, etc.), the pain seems sometimes to be delayed, i.e., in case of teeth extraction appears to be perceptible a minute after the actual operation. An inflammatory condition seems to cause them intense agony, so that I would say they do not feel pain so acutely, but they do not bear it as well as a European.

I would make another comment, in fighting against disease a native will often go under from sheer apathy, whereas the white man keeps going by his nervous energy. I have seen the reverse in the case of a carrier who went through an

(121) impressed on people's memories and remembered by most of the people. Thus it
(125) was desirable to find a useful reference date between 1910 and 1940. It might be thought that the death of King George V would be memorable. However, though all who were old enough at the time could remember the witchdoctors, only a few could remember the death of King George.

(125) This dubious chronology was filled in by events of more local significance. For example, Kwelage's brick house was built in 1929, the present Nyambi succeeded in 1933, &c. In addition, in particular hamlets there were men who had been in the Army, or had been to work in South Africa or Southern Rhodesia. Usually they could recall the date of going and sometimes of return, though they may have lost count of the intervening years. Such dates were often useful points. A small minority had actually recorded the dates of birth and death of children.

In addition to this, it was possible to fix the ages of the young children by reference
(125) to harvests, since the Yao reckon two years in succession, 'last year' meaning before the last harvest and 'the year before last' meaning the period before the harvest before last. Before the year before last, all time is merely *kale-kale*, the only indication of the period being the pitch of the voice in which it is said or the presence or absence of an exclamatory 'Ei' before speaking.

(125) Particular care was taken to secure the ages of women and the dates at which they had borne children. There was, as mentioned above, some reticence in mention-
(129) ing the names of dead children, but this was usually met successfully by questioning the women's male relatives who were generally more communicative on these points.
(129) In spite of the care taken to obtain this information, it was impossible to fix the ages of the women in the sample, and they have been excluded from the major part of the analysis. In addition, there were thirty-nine men who were not available for
(125) questioning. These were all adults, the husbands of women in the hamlets. The Yao are matrilineal and matrilocal, and men tend to spend much of their time away from the hamlet of their relatives-in-law. Since they are in many ways strangers in the hamlets no information could be obtained about them.

2. The General Background to Fertility

All the hamlets visited were occupied by members of the Yao tribe. The Yao are an Islamized people who achieved the questionable distinction of being efficient slave raiders at the end of the nineteenth century. They are a matrilineal and pre-
(264) dominantly matrilocal people living in hamlets of from about 5 to 100 huts or more.

Table 1. *Age of Women at First Marriage*

(282)

Place	Age of women at first marriage												
	[illegible]	[illegible]	[illegible]	[illegible]	[illegible]	[illegible]	[illegible]	[illegible]	[illegible]	[illegible]	[illegible]	[illegible]	[illegible]
[illegible]	[illegible]	[illegible]	[illegible]	[illegible]	[illegible]	[illegible]	[illegible]	[illegible]	...	...	...	[illegible]	[illegible]
[illegible]	[illegible]	[illegible]	[illegible]	[illegible]	[illegible]	[illegible]	[illegible]	[illegible]	...	[illegible]	[illegible]	[illegible]	[illegible]
[illegible]	...	[illegible]	[illegible]	[illegible]	[illegible]	[illegible]	[illegible]	[illegible]	...	...	...	[illegible]	[illegible]
Totals	[illegible]	[illegible]	[illegible]	[illegible]	[illegible]	[illegible]	[illegible]	[illegible]	...	[illegible]	[illegible]	[illegible]	[illegible]

297 believes that she will die. The man's representatives are therefore able to establish the child's paternity from the birth-pang confessions of the woman.

296 The child is kept in the hut where it was born, for six or seven days, while the umbilical cord dries and falls off. During this time (*bali*) the child is unnamed, and
(208) it is named only when it is taken out of the hut. Should it die during this period of seclusion it remains unnamed and is referred to by a special term (*ilopu*, pl. *mulopu*).
(128) I have therefore been able to enumerate five births by means of the distinction made between miscarriages and still-births (*kwacuga*) and children who lived long enough to be referred to as *mulopu*. After the birth of the child the woman may not have
296 intercourse for four or five months. To do so would be to endanger the life of the
(297) child with a disease called *mdoka*,* which is contracted by a sexually inactive person
297 when he comes into contact with a sexually active person. The husband may have intercourse with a second wife, but must take care to medicine himself so that he does not endanger the life of his child. When the child is about 4 or 5 months of age the parents perform ritual intercourse and medicine the child against the mystical dangers of sexual activity; sexual relations are then resumed.

234 The Yao say that a second child should not be born while the first is still being
(265) suckled. Since lactation continues for about two years I am uncertain whether
297 monogamous women remain continent, as they say they do, or whether *coitus interruptus* is
297 practised. It is quite usual for husbands to become labour migrants when their children are still very young. I have known women to write to their husbands who are away working and tell them to return because their children have 'grown', i.e. have been weaned. Labour recruiters had difficulty in recruiting men immediately after the soldiers had been demobilized at the end of the war, because the women objected, saying that they had remained childless long enough and the men must first wait until children were born. However, actual examination of birth-dates
(163) shows that children are sometimes born within a year of one another and sometimes there are quite big gaps. The two-year gap between children is probably an ideal which few attain.

5. The Estimation of Fertility

(a) *Sundberg's Age Division*

128 As a preliminary estimate of fertility, Sundberg's trichotomy of ages may be considered. The argument behind this division of the population into Youth, Middle Age, and Old Age is that those populations with a high proportion of youth have a greater tendency to increase. Table V shows this trichotomy for the Yao with the same material for some other populations shown for comparison. Where the group reproduction-rate is known for the period shown in the table, this is included.

128 At any one time a certain proportion of the population is absent from the area,
164 usually as some labour centre. Hence the proportions of the population are distributed abnormally. In all there appeared to be a total of sixty-three men, women, and children absent from the hamlets, who would otherwise have been living there. Hence in Table V these have been included in the totals in the 'Yao with absentees' proportions.

(191) * A disease of this sort is believed to by many Central African tribes. Among the Nyanja-speaking peoples it is known as *ciwalo*.

6: Mitchell E-5 (1946-1947) 1949 FT7 Yao FT7

Table V shows that the age distribution for the Yao sample is very similar to certain other populations commonly held to have high birth-rates. There appears to be some correlation between the proportion of youth in a population and the gross

TABLE V. *Lindberg's Age Division*

Population	Yao	Youth 0-17	Middle age 17-40	Old age over 40	G.R.R.
Yao*	[illegible]	[illegible]	[illegible]	[illegible]	[illegible]
Yao with abortions	[illegible]	[illegible]	[illegible]	[illegible]	[illegible]
Bushmen†	[illegible]	[illegible]	[illegible]	[illegible]	[illegible]
Hottentots	[illegible]	[illegible]	[illegible]	[illegible]	[illegible]
Chinese	[illegible]	[illegible]	[illegible]	[illegible]	[illegible]
Malta	[illegible]	[illegible]	[illegible]	[illegible]	[illegible]
Japan	[illegible]	[illegible]	[illegible]	[illegible]	[illegible]
Belgium	[illegible]	[illegible]	[illegible]	[illegible]	[illegible]
Czechoslovakia	[illegible]	[illegible]	[illegible]	[illegible]	[illegible]
New Zealand	[illegible]	[illegible]	[illegible]	[illegible]	[illegible]
Denmark	[illegible]	[illegible]	[illegible]	[illegible]	[illegible]
Sweden	[illegible]	[illegible]	[illegible]	[illegible]	[illegible]

* These were all in the sample whose ages were not known. These were all adults and have been included proportionately in the two adult groups.

† All data for other populations taken from *The League of Nations Statistical Yearbook* (1936).

‡ Interpolated between ages 0-19[illegible] and 19[illegible]-[illegible].

reproduction rate. Judging from the material presented in Table V a high gross reproduction rate may be expected among the Yao where the proportion of youth is much higher than in the case of those whose gross reproduction rates are quoted.

(8) *The Proportion of Children under 5 to Women 15-50*

Fertility may be judged more accurately than by this catchcrop by considering the proportion of children under 5 to the total number of women between the ages of 15 to 50, i.e. the fertility ratio.[1] In the whole sample there were 147 children under 5 and 150 women between the ages of 15 to 50. This is a ratio of 980 children per 1,000 women. However, women who are going away from the area for a long time, as, for example, wives of men who are going with their husbands to some labour centre, possibly in South Africa or Southern Rhodesia, usually leave their weaned children with their matrilineal relatives. This means that the ratio quoted (980 per 1,000) is, in reality, an over-estimate of the true ratio. In order to arrive at a nearer estimate of the ratio we must consider the children actually born to women in the sample. Table VI classifies all children both dead and surviving born to women between the ages 15 to 55. From this table we adduce that there were 150 women between the ages 15 to 50 (for whom details were available), and among them they had 141 surviving children under the age of 5. This is a fertility ratio of 758 per 1,000 women. Table VII shows the fertility ratio for 18 countries with their gross reproduction-rate for the same period as the fertility ratio.

[1] It is more usual to take the number of women between 15 and 45, though recently the age-group between 15 and 50 has been used. I have taken the age-limits 15 to 50 because of the early age of marriage, and because it appeared that the average age of cessation of child-bearing is about 50 (see Table VIII). For a discussion of the suitability of this measure of fertility when birth registration is not practised, see T. Lynn Smith, *Population Analysis*, McGraw-Hill Book Co., New York (1948), p. 198.

[illegible] AN ESTIMATE OF FERTILITY IN SOME YAO HAMLETS IN

TABLE VI. *Live-born Children, Alive or Dead at Time of Survey. Mothers aged 15 to 55*

162
163

Age of mother at time of survey	Mothers	Alive or Dead	Number of [illegible] born alive to date of [illegible]								Totals	
			[illegible]	[illegible]	[illegible]	[illegible]	[illegible]	[illegible]	[illegible]	[illegible]	[illegible]	[illegible]
[illegible]	[illegible]	A	[illegible]	[illegible]	[illegible]	[illegible]	[illegible]	[illegible]	[illegible]	[illegible]	[illegible]	[illegible]
		D	[illegible]	[illegible]	[illegible]	[illegible]	[illegible]	[illegible]	[illegible]	[illegible]	[illegible]	[illegible]
[illegible]	[illegible]	A	[illegible]	[illegible]	[illegible]	[illegible]	[illegible]	[illegible]	[illegible]	[illegible]	[illegible]	[illegible]
		D	[illegible]	[illegible]	[illegible]	[illegible]	[illegible]	[illegible]	[illegible]	[illegible]	[illegible]	[illegible]
[illegible]	[illegible]	A	[illegible]	[illegible]	[illegible]	[illegible]	[illegible]	[illegible]	[illegible]	[illegible]	[illegible]	[illegible]
		D	[illegible]	[illegible]	[illegible]	[illegible]	[illegible]	[illegible]	[illegible]	[illegible]	[illegible]	[illegible]
[illegible]	[illegible]	A	[illegible]	[illegible]	[illegible]	[illegible]	[illegible]	[illegible]	[illegible]	[illegible]	[illegible]	[illegible]
		D	[illegible]	[illegible]	[illegible]	[illegible]	[illegible]	[illegible]	[illegible]	[illegible]	[illegible]	[illegible]
[illegible]	[illegible]	A	[illegible]	[illegible]	[illegible]	[illegible]	[illegible]	[illegible]	[illegible]	[illegible]	[illegible]	[illegible]
		D	[illegible]	[illegible]	[illegible]	[illegible]	[illegible]	[illegible]	[illegible]	[illegible]	[illegible]	[illegible]
[illegible]	[illegible]	A	[illegible]	[illegible]	[illegible]	[illegible]	[illegible]	[illegible]	[illegible]	[illegible]	[illegible]	[illegible]
		D	[illegible]	[illegible]	[illegible]	[illegible]	[illegible]	[illegible]	[illegible]	[illegible]	[illegible]	[illegible]
[illegible]	[illegible]	A	[illegible]	[illegible]	[illegible]	[illegible]	[illegible]	[illegible]	[illegible]	[illegible]	[illegible]	[illegible]
		D	[illegible]	[illegible]	[illegible]	[illegible]	[illegible]	[illegible]	[illegible]	[illegible]	[illegible]	[illegible]
[illegible]	[illegible]	A	[illegible]	[illegible]	[illegible]	[illegible]	[illegible]	[illegible]	[illegible]	[illegible]	[illegible]	[illegible]
		D	[illegible]	[illegible]	[illegible]	[illegible]	[illegible]	[illegible]	[illegible]	[illegible]	[illegible]	[illegible]
[illegible]	[illegible]	A	[illegible]	[illegible]	[illegible]	[illegible]	[illegible]	[illegible]	[illegible]	[illegible]	[illegible]	[illegible]
		D	[illegible]	[illegible]	[illegible]	[illegible]	[illegible]	[illegible]	[illegible]	[illegible]	[illegible]	[illegible]
Totals	[illegible]	A	[illegible]	[illegible]	[illegible]	[illegible]	[illegible]	[illegible]	[illegible]	[illegible]	[illegible]	[illegible]
		D	[illegible]	[illegible]	[illegible]	[illegible]	[illegible]	[illegible]	[illegible]	[illegible]	[illegible]	[illegible]

* Excludes one woman whose children were not in the hamlet at her death upon could not be determined.

TABLE VII. *Fertility Ratios and Gross Reproduction rates for Eighteen Countries*[a]

162
163
171

Country	Year	Fertility ratio[b]	G.R.R.
Chile	[illegible]	[illegible]	[illegible]
Japan	[illegible]	[illegible]	[illegible]
Cuba	[illegible]	[illegible]	[illegible]
Belgium	[illegible]	[illegible]	[illegible]
Finland	[illegible]	[illegible]	[illegible]
Union of S.A.	[illegible]	[illegible]	[illegible]
Portugal	[illegible]	[illegible]	[illegible]
Italy	[illegible]	[illegible]	[illegible]
Canada	[illegible]	[illegible]	[illegible]
Czechoslovakia	[illegible]	[illegible]	[illegible]
Canada	[illegible]	[illegible]	[illegible]
Ireland	[illegible]	[illegible]	[illegible]
Poland	[illegible]	[illegible]	[illegible]
Denmark	[illegible]	[illegible]	[illegible]
Norway	[illegible]	[illegible]	[illegible]
New Zealand	[illegible]	[illegible]	[illegible]
U.S.A.	[illegible]	[illegible]	[illegible]
Switzerland	[illegible]	[illegible]	[illegible]
Sweden	[illegible]	[illegible]	[illegible]

* Source: The League of Nations Statistical Yearbook, [illegible]. Only those countries which showed gross reproduction rates based on three years data and in which adequate age groupings were used.

† Same used the age-limits up to the three calculations.

(199)

last was to a trough in 1931-4 and then beginning to rise again. However, with a sample as small as this one, and since we are relying on memory for most of this information, it would be unwise to accept this as significant. These tables have in turn been combined into three tables each covering one ten-year period from 1917 to 1948. These are shown in Table IX.

Table IX. *Average Gross Reproduction rates in Ten-year Periods since 1917 to 1948*

Age of mother	1917-26			1927-36			1937-46		
	No. of women*	No. of live-born females	Annual average female fertility rate	No. of women	No. of live-born females	Annual average female fertility rate	No. of women	No. of live-born females	Annual average female fertility rate
15-19	[illegible]	[illegible]	[illegible]	[illegible]	[illegible]	[illegible]	[illegible]	[illegible]	[illegible]
20-24	[illegible]	[illegible]	[illegible]	[illegible]	[illegible]	[illegible]	[illegible]	[illegible]	[illegible]
25-29	[illegible]	[illegible]	[illegible]	[illegible]	[illegible]	[illegible]	[illegible]	[illegible]	[illegible]
30-34	[illegible]	[illegible]	[illegible]	[illegible]	[illegible]	[illegible]	[illegible]	[illegible]	[illegible]
35-39	[illegible]	[illegible]	[illegible]	[illegible]	[illegible]	[illegible]	[illegible]	[illegible]	[illegible]
40-44	[illegible]	[illegible]	[illegible]	[illegible]	[illegible]	[illegible]	[illegible]	[illegible]	[illegible]
45-49	[illegible]	[illegible]	[illegible]	[illegible]	[illegible]	[illegible]	[illegible]	[illegible]	[illegible]
15-49	[illegible]	[illegible]	[illegible]	[illegible]	[illegible]	[illegible]	[illegible]	[illegible]	[illegible]
Totals			[illegible]			[illegible]			[illegible]
G.R.R.	[illegible]			[illegible]			[illegible]		

* This does not mean that these totals represent the size of the sample. This is an average one and some women have been counted more than once.

† These rates are higher than might be expected. There appears to be no special reason why these rates should be so high, and the explanation probably lies in the smallness of the sample.

The obvious deficiency in this set of data is that the women who died are not included, and since many more of the 1917-26 cohort (i.e. those women who were in the child-bearing ages in that period) have died than, say, for the 1937-46 period, the rates calculated for earlier periods become more and more unreliable. There seems

Table X. *Average Gross Reproduction rates per Ten-year Period 1917-48*

Age group	1917-26			1927-36			1937-46		
	Women	Girls	Rate	Women	Girls	Rate	Women	Girls	Rate
15-19	[illegible]	[illegible]	[illegible]	[illegible]	[illegible]	[illegible]	[illegible]	[illegible]	[illegible]
20-24	[illegible]	[illegible]	[illegible]	[illegible]	[illegible]	[illegible]	[illegible]	[illegible]	[illegible]
25-29	[illegible]	[illegible]	[illegible]	[illegible]	[illegible]	[illegible]	[illegible]	[illegible]	[illegible]
30-34	[illegible]	[illegible]	[illegible]	[illegible]	[illegible]	[illegible]	[illegible]	[illegible]	[illegible]
35-39	[illegible]	[illegible]	[illegible]	[illegible]	[illegible]	[illegible]	[illegible]	[illegible]	[illegible]
40-44	[illegible]	[illegible]	[illegible]	[illegible]	[illegible]	[illegible]	[illegible]	[illegible]	[illegible]
45-49	[illegible]	[illegible]	[illegible]	[illegible]	[illegible]	[illegible]	[illegible]	[illegible]	[illegible]
15-49	[illegible]	[illegible]	[illegible]	[illegible]	[illegible]	[illegible]	[illegible]	[illegible]	[illegible]
Totals			[illegible]			[illegible]			[illegible]
G.R.R.	[illegible]			[illegible]			[illegible]		

no way of circumventing this difficulty for the earlier periods, but some correction for this may be included in the 1937-46 rates. All those women who were in the child-bearing ages when they died between 1937 and 1946 were counted and

6: Mitchell E-5 (1946-1947) 1949 FT7 Yao FT7

included in the material that was prepared for Table IX. In this way it was possible to construct Table X which shows as close an approximation as we can get to the gross reproduction rate from the material on hand.

Since the exact date of death was unknown (i.e. day and month) it was assumed that at death the women were at the mid-point of the age-group. Therefore the figure 198·5 in Table X represents, for example, 197 women who passed through one particular point and 1 woman who died in that year.

The revised rates for the two five-year periods 1937-41 and 1942-6 are not greatly different from those calculated without taking account of the women who died. The average gross reproduction rate over the ten-year period 1937-46 falls within the limits of expected gross reproduction rate as calculated from the fertility ratio (2·47 to 2·95; see p. 303), and is not widely different from the estimate derived from women who have passed child-bearing (3·13; see p. 304).

(c) *General Conclusions about the Gross Reproduction-rate*

In general we may observe that from the material on hand the gross reproduction-rate for this sample has always been high. This is confirmed since, first, the number of live-born females born to women over the age of 50 is high (3·13); second, the lowest rate calculated for the past is 2·23 for 1932-6, though not too much reliance should be placed on the validity of this; and third, the rate calculated for the last five years which, since correction of dead children would still be fresh, is probably quite accurate, is 2·83.

With a sample as small as the one used in this survey a certain amount of variability is to be expected. Also since all ages are merely estimations based on the memory of informants, one can only expect approximations over fairly long periods of time. For this reason it is probably safer to use the five-year average 1942-6 as an indicator of the present gross reproduction-rate, or even the ten-year average 1937-46. In this case, we may estimate the present gross reproduction-rate at about 2·8 or 2·9.

2. The Net Reproduction-rate

Of course, no mortality statistics for the African population are available. Hence it is necessary to construct a make-shift survival table in order to arrive at some estimate of the net reproduction-rate. This is set out in Table XI. In this table I have assumed that the mean age of each five-year group is 3 years older than the lowest age in that group, i.e. the mean age of the 35-9 age-group is 38. It would have been more consistent to take this mean to be 37·5, but since the ages at death are not accurately known there seemed little point in doing this.

The problem then becomes: what proportion of girls born to mothers of average age 28 years (for example), i.e. in the 25-9 year age-group, will themselves survive to be 28 years of age?

In order to arrive at this proportion all the girls born between 1934 and 1943 who were recorded on family census forms were abstracted, i.e. 151. Of these 28 died before reaching the age of 4, so that we can assume that 83 per cent survived to the age of 4 and over. For the mortality of the children between 4 and 8, those born between 1929 and 1938 were considered. There were 111 of these, but 14 died before reaching the age of 4. Hence we consider only 98 (as recorded in column 2)

of Table XI) as surviving to the age of 4 and beyond. Of these, 2 died before they turned 8 (see column v) which indicates a survival of 98 per cent. for this period. It will be remembered that 89 per cent. of all girls born alive survived to be 4 years old, and now we know that 98 per cent. of these lived to be 8 years old. Hence,

TABLE XI. *Survival Table: Females*

Year of birth of females	Age-groups through which females born in years in col. i have entered and passed (except of last)	No. of females entering age-group	No. of females who died before passing out of age-group	No. of females who survived through age-group	Per cent. of females who survived through age-groups	Survival rate	Smoothed values
i	ii	iii	iv	v	vi	vii	viii
[illegible]	1 and under	[illegible]	[illegible]	[illegible]	[illegible]	[illegible]	[illegible]
[illegible]	[illegible]	[illegible]	[illegible]	[illegible]	[illegible]	[illegible]	[illegible]
[illegible]	[illegible]	[illegible]	[illegible]	[illegible]	[illegible]	[illegible]	[illegible]
[illegible]	[illegible]	[illegible]	[illegible]	[illegible]	[illegible]	[illegible]	[illegible]
[illegible]	[illegible]	[illegible]	[illegible]	[illegible]	[illegible]	[illegible]	[illegible]
[illegible]	[illegible]	[illegible]	[illegible]	[illegible]	[illegible]	[illegible]	[illegible]
[illegible]	[illegible]	[illegible]	[illegible]	[illegible]	[illegible]	[illegible]	[illegible]
[illegible]	[illegible]	[illegible]	[illegible]	[illegible]	[illegible]	[illegible]	[illegible]
[illegible]	[illegible]	[illegible]	[illegible]	[illegible]	[illegible]	[illegible]	[illegible]
[illegible]	[illegible]	[illegible]	[illegible]	[illegible]	[illegible]	[illegible]	[illegible]
[illegible]	[illegible]	[illegible]	[illegible]	[illegible]	[illegible]	[illegible]	[illegible]

we can say that 89 × 98 = 87 per cent. of all children survive to be 8 years old (see column vii of Table XI). These points were then plotted and the curve smoothed by hand. Smoothed values for the mean ages, i.e. for 17½, 19½, &c., were then read off and are recorded in column viii of Table XI. These smoothed values represent the survival-rate over the last 13 years and may now be applied to the gross reproduction-rate for roughly the same period, i.e. for the period 1937–46 in Table IX. This is done in Table XII.

TABLE XII. *Net Reproduction-rate: Average 1937–46*

Age group	Female fertility rate	Survival rate	Survival fertility rate
i	ii	iii	iv
[illegible]	[illegible]	[illegible]	[illegible]
[illegible]	[illegible]	[illegible]	[illegible]
[illegible]	[illegible]	[illegible]	[illegible]
[illegible]	[illegible]	[illegible]	[illegible]
[illegible]	[illegible]	[illegible]	[illegible]
[illegible]	[illegible]	[illegible]	[illegible]
[illegible]	[illegible]	[illegible]	[illegible]
[illegible]	[illegible]	[illegible]	[illegible]
		Net reproduction-rate	[illegible]

The sum of column iv in Table XII (1·1) is the net reproduction-rate. This figure is admittedly high, and we may look for the error in the possibility that some females who died are not recorded so that the mortality rate is underestimated. However, there seems to be sufficient evidence to conclude that the replacement rate is high.

11: Sanderson D-5 (ca. 1920) 1920 FT7 Yao FT7

RELATIONSHIPS AMONG THE WAYAO.

By Maurice Sanderson,
Medical Officer, Nyasaland Protectorate.

Introductory.—Various writers have attempted to give English equivalents to the Yao terms denoting relationship, or have alluded to the outstanding features of the system, but I am not aware that anybody has hitherto worked out the whole system. [1]

Although it is very similar to other classificatory systems, I feel that a description of it may not be quite valueless, more especially on account of the evolutionary changes that are taking place.

The WaYao are a Bantu tribe, exogamous but not totemic, which until the middle of the last century inhabited that part of Central Africa lying to the East of Lake Nyasa, particularly in the valleys of the Lujende and Rovuma rivers. Up to that time the tribe had not extended far from the area indicated except perhaps in a northerly direction, but owing to constant intercecine war in their own territory the Yaos then invaded and conquered a large part of the neighbouring territories, especially to the north, in what is now called Nyasaland. [2] [3]

I have said that the WaYao are not totemic, and that statement is correct at the present time. Opinions differ, however, as to how recent their loss of totemism is; though their initiation ceremonies are generally regarded as totemic, even there, in my opinion, the evidence is not conclusive, and there remains no suspicion of totemism outside those ceremonies. [4]

It should be mentioned that Islam is much more prevalent among the Yaos than among their neighbours, but its influence is not yet so deep-rooted as greatly to obscure the pure tribal customs, except to a certain extent among the rising generation. [5]

To facilitate description the relationships are given in tabular form, the relationship being given with reference to one man or woman. [6]

In Table I, Column 1 describes the relationship, Column 2 gives either the nearest equivalent of the Yao term, or, if none, the actual term. Columns 3-8 give the various relatives of the person named in Column 1, as they would be named by the man or woman under consideration. [7]

For example, the brother of (a)'s father (Column 1) is regarded as (a)'s father (Column 3), the wife of (a)'s father's brother is (a)'s mamye (Column 5), their child a his "brother" or "sister" (Column 6), and so on (see Table I).

1: Tew E-4 (no date) 1950 F77 Tao F77

I. REGION OF MOZAMBIQUE

TAO, MAKUA-LOMWE, MAKONDE

In the region between Lake Nyasa and the east coast of Africa, between the Lukulidi river in the north and the Zambezi in the south, there is a congeries of peoples whose culture is very similar over the whole area. They are the *Makonde* group, the *Yao* and the *Makua-Lomwe* peoples. Of these only the Yao has been studied in detail. The scanty information about the other inhabitants of the region will be summarized after the fuller summary of the Yao material, so that points of similarity and difference may appear more clearly. Fortunately for this procedure the Yao occupy a central position, from which they may be taken to represent in many ways the culture of the neighboring peoples.

The *Makonde* inhabit the Makonde plateau between the Lukulidi and Rovuma rivers (39° and 41° longitude). Closely related to them are the *Mawia*, on the plateau of that name, south of the Rovuma; the *Mawia*, north of the Lukulidi river, on the Rondo plateau; and the *Matambwe*, in the Rovuma valley. It is possible that the *Ngindo*, *Ndonde*, and *Ndendeule* should also be included. This group seems to be culturally and linguistically distinct in several points from the Makua and Lomwe, and the Yao, although they have in common the main features of political and social organization.

The region of the Yao is between the Rovuma, Lujenda, and Luchilingo rivers. They also extend into Nyasaland and Tanganyika Territory.

The *Makua* occupy the area between the Lujenda and Lurio rivers and the coastal strip from the mouth of the Lurio nearly to Quilimane.

The *Lomwe* are sometimes regarded as a sub-branch of the Makua, but probably have as much right to be called a separate tribe as the Yao. They are bordered by the Makua on the north, east, and south, and by Mawri on the west. South of them, around Quilimane and east of the Milanje mountains, are the *Chuabo* related to the Makua and Lomwe, and also the Podzo, on the south bank of the Zambezi delta.

The region is forested lightly or heavily, and varies in character according to the elevation, soil, and humidity. The coastal belt from Mozambique northwards has dense bush vegetation, thick in parts, giving way to light forest and grassland further inland. In the uplands there is good forest, broad-leaved and evergreen, and deciduous trees near the lake district. Throughout the territory there are narrow strips of richer vegetation along the watercourses, and along the coast mangrove swamps occur at intervals. In the highlands the mornings and evenings are cool and pleasant for eight months of the year, and it is even cold at night in May and August, temperatures of 50° and 60° F. being common in the day. In the hot season the heat is severe, especially in the valley of the Rovuma. The mean annual rainfall for Mozambique is 39.30 in. and for Likoma on the lake, 39.9 in.*

The people are primarily cultivators, but the Yao keep cattle in the highlands. Both Yao and Makua traded with the Arabs and were energetic slave-raiders. The coast Makua and most of the Yao are Islamized.

* *[illegible] communicated to us.*

* *Handbook of Portuguese East Africa, 1920, pp. [illegible].*

[P.1]

1: Tow E-4. (no date) 1950 FT7 Tao FT7

[95] All these peoples have in common the following points of social organization: matrilineal clans, matrilineal marriage, residence in small villages under independent chiefs or headmen. They have elaborate initiation schools with circumcision for boys, and initiation without an operation for girls. It is mainly by variations in the initiation rites that their cultures can be distinguished from one another. They also distinguish themselves by linguistic variations and by cicatrizations. This is the region of the pelele, or lip-ring, although Yao do not wear it.

[96]

THE YAO

TRIBAL AND SUB-TRIBAL GROUPINGS AND DEMOGRAPHY

Nomenclature

[9] The name of the tribe is spelt and pronounced in a variety of different ways: Yao, Ayo, Yeiao, Hiao, Wahiao, Wahiao, Wahyao, Ayawa, Mjao, Achawa, Wajao, Adjao, Mojao, Mujaoua, Achawa, Achaw, Mochaw. Sometimes they are referred to by the name of one of the sections of the tribe or of one of the leaders: e.g. Amachinga, Amangochia, Mamaninga (also spelt Amaninga and Amaninga), Chiwala, Kawale, Kalanje, Mikesle.[1]

Centres

[98] The Yao claim a hill called Yao, near Mozambique, between the Rivers Lujenda and Lechilinga, as the original centre from which they dispersed. The main body of Yao is in Portuguese East Africa, and there are large settlements in Tanganyika and Nyasaland.

[3] [69]

(a) *Portuguese East Africa.* The two main divisions of Yao in Portuguese East Africa are around Mozambique and around Mocuba, on the Lujenda river.[2] Immediately south of the lower Rovuma and at its mouth there are two smaller groups. The Yao occupy most of the territory between the Mbinje, Lechilinga, and Rovuma rivers in their upper courses.[3]

(b) *Tanganyika.* Yao entered Tanganyika Territory at two separate periods. In the 1890's they immigrated into Masasi, Chiwata, Newala, Tunduru districts and around Mikindani and Kyonga.[4] The other two groups are more recent comers: one (about 3,000), were taken as war-captives by the Ngoni in Songea district; the other (about 25,000), in the upper Lukuledi valley in Liuli district. They came in from Portuguese East Africa about 1900.[5]

(c) *Nyasaland.* There are four main groups of Yao:

(i) The largest group lives in the Southern Province, in upper Shire, and south Nyasa districts.

(ii) The second is near Blantyre, Chiradzulu, Zomba.

(iii) A small group is settled in a belt on the west coast of Lake Nyasa at Deweira Bay.[6]

[1] Shepherd, op. cit. p. 1-4; Stefanowski, op. cit. p. 1-2; Abdallah, op. cit. Barnes, op. cit. p. 6-8.
[2] Handbook of Portuguese East Africa, p. 90.
[3] Johnston, H. H., op. cit.
[4] Wards, op. cit. p. 140.
[5] Handbook of Portuguese East Africa, pp. 96, 98.
[6] Barnes, op. cit. Lewis, op. cit. p. 27; Stefanowski, op. cit. p. 1-2.

(iv) Another group is on the south-west side of the lake, north of the Ngoni at Deuke and east of the Ngoni of Ncheu district.[1]

Although these are the main concentrations of Tao, smaller communities are scattered throughout most of the districts of south Nyasaland.

MAP SHOWING MORE IMPORTANT SITES CONNECTED WITH TAO INFILTRATION

Distribution of Tao shown as a percentage of the population of each district
(1931 Census)

Over 30%	South Nyasa	75%	10-20%	Dedza	18%
	Upper Shire	60%		Dowa	15%
				Mlanje	15%
30-20%	Blantyre	28%		Chirdzulu	5%
20-10%	Chiradzulu	20%	5-1%	Chikwawa	5%
	Zomba	18%		Ncheu	1-5%

Rumors

Nothing is known of the history of the Tao before their settlement at Mazembe.[2] Their contact with the Arab traders from the east coast had probably continued for one years before the Europeans arrived.[3] When Lacerda wrote in 1798 the Tao were

[1] Cadenagem, *ibid.* p. 310.
[2] Sousa, o. cit., p. 107; Sheriff, op. c.; Warren, op. c.
[3] Livingstone in 1866 noted the strength of Arab influence.

1: Tew E-4 (no date) 1958 FT? Tew FT?

phone it in the same group of languages as Makua, Nkonde, and Tumbuka, but not with Makonde. He counts Ngindo as a dialect of Yao.[1] Guthrie places it in the Makonde group, but not in the Makua-Lomwe group.[2] (17)

The Yao language shows very little dialectical variation, which is attributed to the age-long Yao love of travel. Such differences as occur are found chiefly in accent or idioms, not in grammatical structure. There are five different divisions corresponding to the different branches of the tribe: (a) *Amahale*, near the sources of the Ruvuma; (b) *Mbande*, near Marako's, south of the Ruvuma; (c) *Mazombe*, near the south end of Lake Nyasa; (d) *Mangoche*, near Blantyre; (e) *Machinga*, on Mount Chikala and Zomba.[3]

PHYSICAL ENVIRONMENT

The Yao boundary on the west, where they mix with Nyanja peoples of the east lake shore, is a line of hills about 1,500 ft. above the lake level, extending south to Mangoche. Starting north-east from the fertile valley of the Mandimba, there is a fairly level plain, watered by other tributaries of the Lujenda, as far as Marako's and Mtarika. On the east side of the Luchilingo river there is a fairly continuous line of mountain fastnesses and hills, and from the source of the Mainje to its confluence with the Ruvuma, there are lines of fastnesses to the east and west, traversed by steep mountain tracks. From the Mainje source to the Ruvuma the country is cut by deep streams and crowned by mountains 2,000 to 3,000 ft. high.[4] On the south bank of the Ruvuma, below the confluence with the Lujenda, the country is a semi-desert, with barren stony soil, little water, and plentiful game. The Yao also inhabit the western edge of the Makondi plateau, where the valley of the Ruvuma widens into a great plain. Here the southern of the Makondi plateau is denuded and the soil is barren and stony. The Makondi bush gives way to thin open forest of mimosa and other trees.[5] Most of the Yao country in the east of Portuguese East Africa is tsetse infested, but in the interior, approaching the east shore of Lake Nyasa, it is capable of supporting fine herds.[6] (18) ((19))

South Nyasa district is mountainous in the east; the plain in the west stretches into Dedza and Ncheu districts. Owing to scarcity of water in the dry season this plain is thinly populated. The soil of the plain is sandy, except on the shore of the lake and the river bank, where it is rich alluvial soil; in the hilly parts the soil is clayish. During the last few years the lake level has risen and on the lake shore and the banks of the Shire river water is plentiful throughout the year. Smaller rivers have enough water all the year round to supply villages. The average annual rainfall at Fort Johnston is 55 in. for the last six rainy seasons, but the general average is 48 in. The average mean temperature is 75° F. The climate in the plains and at Fort Johnston is hot and trying in the hot seasons, but cooler on the hills. The greater part of upper Shire district is below 2,000 ft. in altitude and hot and unhealthy. In the dry weather most rivers are (20)

[1] Tew, p. 80.
[2] Guthrie, p. 80. Meanwhile some of the earlier informants support Duff's classification, since they are mainly the sources on which a new based (Gutkowski, op. cit., Meinhof, Vorstudien), (1905, p. 10) difficulty with the language of the Gulf of Guinea has been claimed for Yao by Dr. Albert Schwarz, of Bandimah, quoted by Duff, (1955, p. 1).
[3] Gutkowski, 1, (1905, pp. 100-101); 1, (1899, p. 80).
[4] Johnston, 1, (1897).
[5] Thompson, (1885, pp. 85-98).
[6] Sheridan, (1905, p. 10).

2: Mitchell E-5 (1946-1949) 1956 F77 Yao F77

Topography and Surface Water

[15] [35] The Protectorate of Nyasaland lies between latitudes 9° 41′ S. and 17° 16′ S. and longitudes 33° E. and 36° E. It includes most of the surface of Lake Nyasa, the most southerly of the African Great Lakes. This dominant topographical feature, from which Nyasaland has taken its name, is part of the Great Rift Valley which runs from north to south through the territory. On the western, northern and eastern shores of the lake the coastline is fringed by great mountain masses, some of which drop sheer to the lake without a coastal shelf. In the south, the broad base of the valley forms a plain through which runs the Shire River which issues from Lake Nyasa. The western edge of the Rift Valley is fringed by the Kirk Range which sweeps north-westwards to form the Dedza Highlands. On the eastern fringe the valley forks to the east to form a plain between the Mangochi Highlands, the highest point of which is 3400 feet above mean sea level, and the great mass of the Shire Highlands, the highest point of which is 11,000 feet above mean sea level. This plain rises sharply about 800 feet in a mile or two to 2000 feet above mean sea level, eastwards from the Shire River. This forms the scarp of the Great Rift Valley. From the scarp it slopes gently to the west to the smaller lakes Chiuta-Amarambe and Shirwa which lie on the Portuguese East Africa border. Between the Mangochi Highlands and the Shire Highlands the plain is broken by the Chikala-Chanti Range which protrudes almost to the shores of the Lake Shirwa, just to the north of its centre. This range, which forms an outstanding natural feature, has played an important role in the history of Kawinga's followers.

The Mangochi Highlands, the ridge along the scarp of the Great Rift Valley and the Shire Highlands, have form the watershed between the rivers which flow into the Shire and thence the Zambezi, and the rivers which flow into the Chiuta-Amarambe, thence into the Lujenda and to the Rovuma River, or into Lake Shirwa which has no outlet. All the main rivers flow to the Indian Ocean. While the Great Rift Valley is well drained by the Shire River, the plain is inefficiently drained by the rivers which flow to the two smaller lakes. The shores around Chiuta and especially Shirwa are liable to inundation during the rainy season: hence the area depicted on the map is not all suitable for

2: Mitchell E-5 (1946-1949) 1956 FT7 Yao FT7

claims to primacy, and by the ideology of the kinship system is equivalent in status. In Jalasi's area, once again, the indigenous status of the chieftainry is shown by the Administrative recognition of Jalasi against Mkumba, who was a minor chief, and Nanwera, who had come to 'ask land from Jalasi', and who had to give some doves and some ivory for his chieftainry rights in the area.

The relationships of Native Authorities to each other to-day are thus fixed partly by the Administrative structure, and partly by their historical backgrounds, and I have indicated that the structure the Administration imposed in the Yao area was very largely determined by the indigenous structure which existed at that time.[1] The Administrative system to-day, therefore, supports the traditional structure.

The five chiefdoms with which this study is concerned stretch from Zomba in the south, almost to Fort Johnston to the north-east of the Shire River. These chiefdoms are Malenia in the north of Zomba district, whose area lies along the Malosa range of mountains north of Zomba as far as Mount Chawi. Liwonde district stretches from Mount Chikala and Mount Chawi in the south to Mount Mali in the north. This district contains the chiefdoms of Liwonde and Kawinga and the minor chiefdoms under them. In Fort Johnston district which stretches from the north of Mount Mali to Lake Nyasa are the chiefdoms of Jalasi, Nyambi, Katoli, Makanjila and an Nyanja chief Nankhumba. The chiefdoms of Jalasi and Nyambi abut those of Kawinga and Liwonde, and it is with these that we are mainly concerned.

Malenia, whose clan-name is amonde, was apparently the first of the Machinga chiefs to move into present-day Nyasaland from present-day Mozambique.[2] His group moved south-west past the north end of Lake Chiuta and settled for a while on Mount Mali. Malenia was closely followed by Nkata, from whom the Jalasi chieftainry developed and whose clan-name was andewe, and his 'father' Mkumba, who moved in westwards past the north end of Lake Chiuta into the Mangoche Highlands. Here, together with the help of Kawinga and Liwonde, they attacked the so-called Mangoche chiefs (Mlumbe, Chikowi, Kapeni,

[1] Chap. II.

[2] The history of this chieftainry is set out more completely in 'An Outline of the Social Structure of Malenia Area'.

D-5 (no. 1912) 1922 FT? Too FT?

River at Mpimbi where they intended to settle. Here, an old chief, knowing that their presence would cause trouble, persuaded them by tales of many cattle far away on the other side of the river, to cross over, and there they remained.

Kwelaga and Malenya, then, to avoid further raids from the north went down to the Upper Shiri River near Lake Panshimbo, Kwelaga going to Mvera, while Malenya stayed on the east side of the river among the Anyanja, claiming friendship with them because they bore many of the same clan names. Later, Malenya moved up to the highlands about fifteen miles north of what is now Ilondo, and Kwelaga went to Chikala. Malenya was friendly with the Anyanja chief, Chenyani, who was of his clan, and was therefore able to buy from him for a red blanket all the country from the Likwenu stream to the Nalindzi River, a district thirty to forty miles long. There 'ele people settled.

Kwelaga was once again attacked by the Makwangwala from the north, but beat them back, after which they returned to the country whence they came — German East Africa near Lake Nyasa. The Angoni chief was killed in this battle, and the story goes that two Yao captives were told off to carry the crimsoned body back to the Angoni country for burial. As they were not provided with food for the journey, the two men began to eat the corpse. After several days, this was discovered; one of the men was killed but the other escaped to tell the tale. These were barbarous days, and the Yao relate that after raiding a village, the Angoni would leave a pot cooking on the fire with the body of a child in it, well covered with leaves, so that when they had gone away with their booty and the villagers who had taken refuge in the forest returned hungry, they would start eating the leaves and then come upon the body of the child, and having eaten of the juices of a human body, they would have committed a terrible sin.

The immigration of the Amachinga into the country around Mangoche mountain around the Amangoche Yao settled there to move. They passed into the Blantyre and Mlanje districts, and invaded the country of the Anyanja. The chief, Malenya, known as Nakumbo died about 1880, and was succeeded by his nephew, a sister's son, according to the Yao custom. This nephew, Wandalowe, then took the name of Malenya.

In consequence of this succession, there was considerable bad feeling between Wandalowe and the other aspirant to the chieftainship, his cousin, Kumtaja. The latter moved down to the plain below Zomba mountain to the south, where he gathered about him a band of friends and malcontents. Malenya decided to attack him and with this purpose, sent two messengers, Mwapisi and Mapondeka, asking Chikwai and his Angoni to come and do the job for him. Led by Nyamuko, Njewenali, and Kalwyi, the Angoni came from the Shiri River opposite Blantyre, via Matope. They attacked and routed Kumtaja who, owing to the thick country, managed to fall back with most of his people toward Lake Chilwa. Here he was received by his cousin, Chinombo, a son of Nakumbo, and father of my interpreter, Chenga, who ruled among the Anyaw. Afterwards, he moved to Mpimbi on the Shiri where he built a stockaded village.

* Died July 10, 1914.

101
102
131

[End Plate 9]

4:Stannus D-5 (ca. 1909) 1910 FT7 Tan FT7 Harvard FR4

NOTES ON SOME TRIBES OF BRITISH CENTRAL AFRICA.

By H. A. Stannus, M.B.

[With Plates XXVI, XXVII]

M Y 131

With reference to what follows, I deal with the inhabitants of the southern end of Lake Nyasa, more especially those near Fort Johnston.

M Y 563

This people is very mixed, the original inhabitants, "Anyanja," belonging to Nyanja stock, one of the many branches of the Bantu, were many times overrun by invading waves from the east, *Amangoche*, *Ajawa* (Tsi), Machinga, Mavungu, and their territory at this point was also raided from the other side by the Angoni. Though the Machinga may be said to have settled here and be the ruling spirit, the people are more Anyanja than anything else, and their customs, etc., though suffering by being those of a conquered race, yet have survived in great part. These people are often called the Nyasa, only meaning the dwellers near the Lake, but it is a good collective name now.

M Y 128

As far as possible these notes refer to Anyanja and their customs, and added matter and Yao elements have been eliminated; for this reason they will be found to differ in some ways from accounts given by others.

M 147 182 181

Of the average native one may say that his physique is very fair; given regular work and food, conditions such as exist on some of the boats, he develops into a very fine muscular man. A man will carry between fifty and sixty pounds 40 miles in one day, or a number of days in succession covering half that distance per diem. A man could cover 50 to 60 miles in twenty-four hours. He can travel the whole day without food, and would do three or four days' march unloaded without food provided he had water to drink.

M 147 151

Sensibility to pain is undoubtedly less than in the European, *i.e.*, the native can stand pain well if he be not afraid (*e.g.*, removal of sebaceous cyst without anæsthetic, extraction of teeth, etc.), the pain seems sometimes to be deferred, *i.e.*, in cases of tooth extraction appears to be perceptible a minute after the actual operation. An inflammatory condition seems to cause them intense agony, so that I would say they do not feel pain so acutely, but they do not bear it as well as a European.

M 147 157

I would make another contrast, in fighting against disease a native will often go under from sheer apathy, whereas the white man keeps going by his nervous energy. I have seen the reverse in the case of a carrier who went through an

T: Hetherwick M-S (un.,1998) 1952 FT? Yao FT?

SOME ANIMISTIC BELIEFS AMONG THE YAO OF BRITISH CENTRAL AFRICA.

By the Rev. ALEXANDER HETHERWICK, M.A., F.R.G.S., of the Blantyre Mission, British Central Africa.

The original home of the Yao tribe may be roughly described as the large and lofty plateau which lies to the east of Lake Nyasa, and is bounded by the Rivers Rovuma and Lujenda. Forty years ago, about the time that Livingstone first entered the country, they began to be pressed on the north by the Magwangwara, and on the east by the Makowa tribes. These invaders caused them to move, some westward down to the shores of Lake Nyasa or the banks of the Upper Shire River, and others southward to the Shire Highlands, Mount Zomba and the eastern slopes of Mount Mlanje. In every case they succeeded in either subjugating or expelling the original Mawri or Mang'anja inhabitants of those districts, and in no case have they lost their own independence.

Till about fifty or sixty years ago the Yao were unvisited by any external influences, and when at that time the Arab and coast traders from Kilwa and Zanzibar began to meet and trade with them they appear to have been little affected by contact with these visitors. Only a few of the younger men, apart at following Mohammedan teachers, and these only grafted on to their still cherished belief in the old faiths of their fathers. The Koran, or a few of its texts, was added to the many other charms they had already hung about their necks. The faith which the first missionaries found them in possession of when they entered the country twenty-five years ago may therefore be held to be the unadulterated creed of the tribe (this time immemorial).

The foundation of the Yao religion is to be found in the *linde*, the soul, shade or spirit which every human being possesses, and which is the inspiring agent in his life. They profess to give no definite description of the nature or characteristics of this soul. In their minds however it is allied with the shadow, and would seem to bear to the body the relation which a picture has to the reality. Their word for a shadow is *chiwilili*, which is also the term that they use to denote a picture, and pictures they associate with the shades or shadows of the dead. I have known natives refuse to enter a room where pictures were hung on the walls "because of the *mandu*, souls, which were in them." The photographic camera was at first an object of dread, and when it was turned upon a group of natives they dispersed in all directions with shrieks of terror. "The European,"

[P.146]

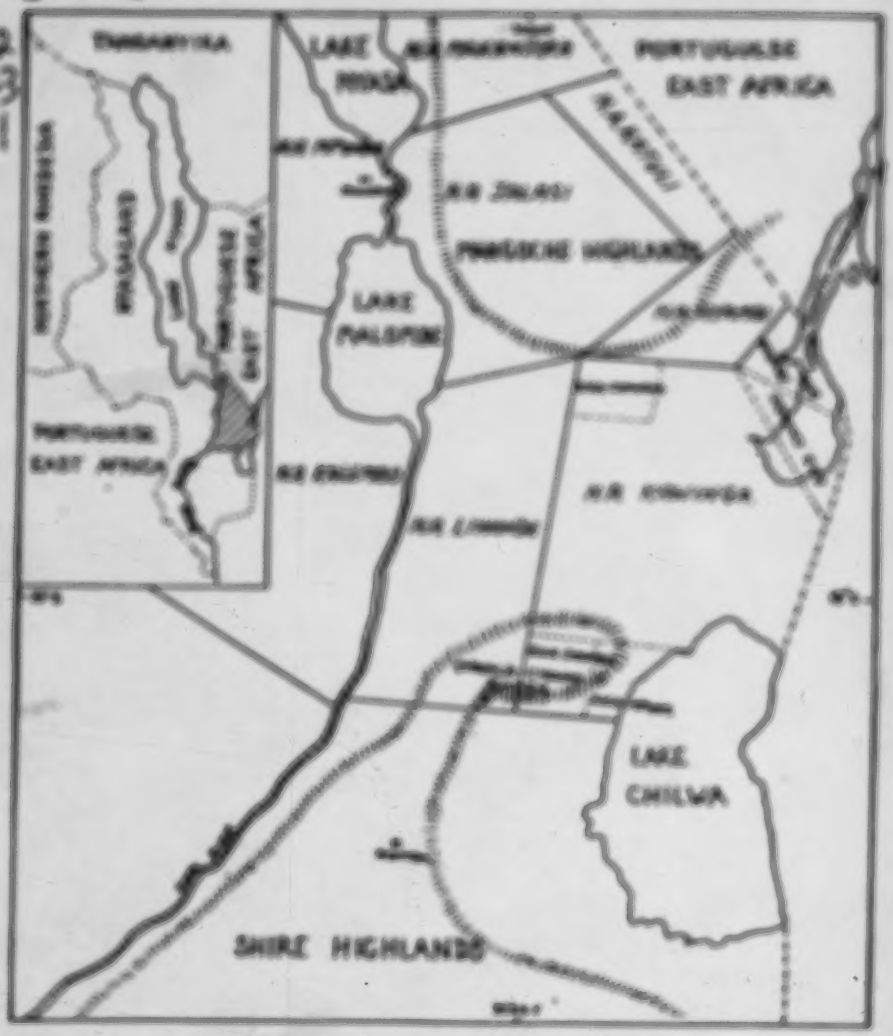

Map to show Administrative Provinces or Cantons

This map is diagrammatic. In other words it shows the relative position of the chiefs and does not pretend to represent the boundaries faithfully.

(43) in which the District Commissioner would be
(62) the real authority with the Principal Headmen
175 as his subordinates, to carry out certain well-
(49) defined duties under his instructions. The
Principal Headmen were expected to assist in
the construction of the huts in accordance with
the new regulations concerning village headmen
and the villages they controlled. Measures for the
sanitation in the villages, scrapping and clearing
of villages, the construction of refuse-pits and
latrines, were included in the Ordinance and the
responsibility for this devolved upon the headmen.
Village headmen were also expected to report
crimes, abnormal illnesses and deaths, and so on.
A clause specifically stated that no power to hear

[TEXT CONTINUES TOP OF P.149B]

IV. THE PRESENT POSITION

(43) In order to illustrate the structure of the political
175 divisions with which we are dealing, I shall
(49) outline the make-up of the three districts under
131 the Native Authorities Kwinga, Liwonde and
Nyambi (see accompanying map).

It will be recalled that Kwinga and Liwonde
trace their descent from a single ancestress three
generations back from the present Kwinga and
five generations back from the present Liwonde.
The groups under the leadership of these two brothers
Liwonde I and Kwinga I, entered Nyambi
land in the early part of the nineteenth century
and after various campaigns in Mount Mangochi
area migrated across the Shire River at Mvera
and took up their positions on Kwapwa hill. Here
the second Kwinga died. Shortly after this
the groups were displaced by Ngoni raids and
they recrossed the Shire River and moved south-
wards to displace another Yao chief, Malonda,
from Mount Chiuta (near Zomba), which strong-
hold Kwinga held until they were displaced
by the British attacks in 1895. Liwonde at first
occupied the neighbouring range Canal but soon
moved down to the Shire River. He too was
displaced by British attacks and fled with Ka-

[TEXT CONTINUES MIDDLE OF P.149B]

and determine petty native cases was conferred upon the headmen, though the District Commissioner was supposed to seek their advice when necessary.

Therefore, from the time of conquest a pattern of superordination of the Whites and subordination of the Africans was established and the indigenous political system remained largely without official recognition until the Native Authorities Ordinance was passed in 1933. The major change wrought by this Ordinance was that Native Courts were planned and instituted by the Native Courts Ordinance of the same year. At the same time a Native Treasury was founded.

IV. THE PRESENT POSITION

wings to Portuguese East Africa. They were allowed to remain later and they took up their positions in an area roughly outlined in the early part of this paper. At the same time, owing to military action by the Portuguese a certain number of refugees were crossing the border into the Lake Chiuta area of Nyasaland.

TABLE I

*Demographic Composition of Political Areas**

Sub. Area	Tot. Pop.	Admin. Vills.	Av. Pop. of Admin. Vills.	Tribal Composition			
				%	%	%	%
N.A. Kawinga (Tonga)	23,087	311	74	21	29	50	1
S.N.A. Cantiu (Tonga)	5,119	61	84	72	20	7	1
S.N.A. Mpeme (Tonga)	4,411	60	74	49	19	32	—
S.N.A. Chiwalo (Tonga)	2,202	19	116	80	15	5	—
S.N.A. Ngokwe (Ngoni)	2,868	21	136	16	42	40	1
S.N.A. Chibwana (Ngoni)	7,102	49	145	28	56	16	—
N.A. Liwonde (Yao)*	12,714	106	120	73	20	5	—
N.A. Nyambi (Yao)*	7,335	63*	116	73	27	—	—

Acknowledgements are due to many African friends who have freely given me information, and especially to Mr. Bennett Makhokha.

The present Bantu population of the Shiré Highlands in South Nyasaland consists of four major groups:

1. The Nyanja tribe, the country's earliest known inhabitants, whose language is closely allied to that of the Sena and Tonga people on the Zambezi and the Senga on the Lower, but whose origin is uncertain. In 1858 Livingstone found various branches of this tribe settled throughout South Nyasaland.

2. The Yao tribe, members of whom between 1860 and 1870 were driven southwards from their home in Portuguese East Africa by the neighbouring Arabian "Wahiko. These fugitive Yao fell upon the unwarlike Nyanja, conquered and subjugated their chiefs, and finally settling among them, intermarried to a certain extent.

3. A sprinkling of Ngoni, that branch of the Zulu whose flight from Chaka, wanderings in East Africa and ultimate settlement in Nyasaland and Portuguese East Africa, are familiar history. In the Shiré Highlands Ngoni are found only in small scattered groups, for their real home is the "Angoni Highlands" of central Nyasaland.

4. Recent immigrants from various tribes in Mozambique, given by Nyanja and Yao the indiscriminate name of "Lomwe", (*i.e.*, possibly, "people from Lomwe Hill") or more rudely, "Ngoni", (*i.e.* "people who speak indistinctly, like drunkards").

This study was made in the district around Zomba and deals exclusively with the Nyanja AND YAO TRIBES, WHO THERE PREDOMINATE

RELATIONSHIPS AMONG THE WATAO.

By Mamaryn Sanderson,
Medical Officer, Nyasaland Protectorate.

Introductory.—Various writers have attempted to give English equivalents to the Yao terms denoting relationship, or have alluded to the outstanding features of the system, but I am not aware that anybody has hitherto worked out the whole system. [12]

Although it is very similar to other classificatory systems, I feel that a description of it may not be quite valueless, more especially on account of the evolutionary changes that are taking place.

The WaYao are a Bantu tribe, exogamous but not totemic, which until the middle of the last century inhabited that part of Central Africa lying to the East of Lake Nyasa, particularly in the valleys of the Lujenda and Rovuma rivers. Up to that time the tribe had not extended far from the area indicated except perhaps in a northerly direction, but owing to constant intercecine war in their own territory the Yaos then invaded and conquered a large part of the neighbouring territories, especially to the north, in what is now called Nyasaland. [10] [13]

I have said that the WaYao are not totemic, and that statement is correct at the present time. Opinions differ, however, as to how recent their loss of totemism is; though their initiation ceremonies are generally regarded as totemic, even there, in my opinion, the evidence is not conclusive, and there remains no suspicion of totemism outside those ceremonies. [11]

It should be mentioned that Islam is much more prevalent among the Yaos than among their neighbours, but its influence is not yet so deep-rooted as greatly to obscure the pure tribal customs, except to a certain extent among the rising generation. [17]

To facilitate description the relationships are given in tabular form, the relationship being given with reference to one man or woman. [12]

In Table I, Column 1 describes the relationship, Column 2 gives either the nearest equivalent of the Yao term, or, if none, the actual terms. Columns 3-6 give the various relations of the person named in Column 1, as they would be named by the man or woman under consideration. [6]

For example, the brother of (*a*)'s father (Column 1) is regarded as (*a*)'s father (Column 2), the wife of (*a*)'s father's brother is (*a*)'s *alunga* (Column 3), their child a his "brother" or "sister" (Column 4), and so on (see Table I).

I. REGION OF MOZAMBIQUE

YAO, MAKUA-LOMWE, MAKONDE

In the region between Lake Nyasa and the east coast of Africa, between the Lukulenli 127
river in the north and the Zambezi in the south, there is a complex of peoples whose 128
culture is very similar over the whole area. They are the *Makonde* group, the Yao and the *Makua-Lomwe* peoples. Of these only the Yao has been studied in detail. The scanty information about the other inhabitants of the region will be summarized after the fuller summary of the Yao material, so that points of similarity and difference may appear more clearly. Fortunately for this procedure the Yao occupy a central position, from which they may be taken to represent in many ways the culture of the neighbouring peoples.

The *Makonde* inhabit the Makonde plateau between the Lukulenli and Rovuma 130
rivers (39° and 40° longitude). Closely related to them are the *Mwera*, on the plateau of that name, south of the Rovuma; the *Mawia*, north of the Lukulenli river, on the Rondo plateau; and the *Matambwe*, in the Rovuma valley. It is possible that the *Ngindo*, *Ndendo*, and *Ndendende* should also be included. This group seems to be culturally and linguistically distinct in several points from the Makua and Lomwe, and the Yao, although they have in common the main features of political and social organization.

The region of the *Yao* is between the Rovuma, Lujenda, and Lurhilinga rivers. 131
They also extend into Nyasaland and Tanganyika Territory.

The *Makua* occupy the area between the Lujenda and Lurio rivers and the coastal 132
strip from the mouth of the Lurio nearly to Quilimane.

The *Lomwe* are sometimes regarded as a sub-branch of the Makua, but probably have as much right to be called a separate tribe as the Yao. They are bordered by the Makua on the north, east, and south, and by Marari on the west. South of them, around Quilimane and east of the Marajó mountains, are the *Cuabo*,[1] related to the Makua and Lomwe, and also the *Podzo*, on the south bank of the Zambezi delta.

The region is forested lightly or heavily, and varies in character according to the 133
elevation, soil, and humidity. The coastal belt from Mozambique northwards has thorn-bush vegetation, thick in parts, giving way to light forest and grassland further inland. In the uplands there is good forest, broad-leaved and evergreen, and deciduous trees near the lake district. Throughout the territory there are narrow strips of richer 132
vegetation along the watercourses, and along the coast mangrove swamps occur at intervals. In the highlands the mornings and evenings are cool and pleasant for eight months of the year, and it is even cold at night in May and August, temperatures of 50° and 60° F. being common in the day. In the hot season the heat is severe, especially in the valley of the Rovuma. The mean annual rainfall for Mozambique is 39·50 in. and for Lilonna on the lake, 39·9 in.[2]

The people are primarily cultivators, but the Yao keep cattle in the highlands. Both 195
Yao and Makua traded with the Arabs and were energetic slave-raiders. The coast Makua and most of the Yao are Islamized.

[1] *c*= pronounced as *ch*.

[2] *Handbook of Portuguese East Africa*, 1920, pp. 68–77.

[P.1]

place it in the same group of languages as Makua, Ulomdo, and Tumbuka, but not with Makonde. He counts Ngindo as a dialect of Yao.[1] Guthrie places it in the Makonde group, but not in the Makua-Lomwe group.[2] (197)

The Yao language shows very little dialectical variation, which is attributed to the age-long Yao love of travel. Such differences as every are found chiefly in accent or idiom, not in grammatical structure. There are five different divisions corresponding to the different branches of the tribe: (a) *Amahale*, near the sources of the Ruvuma; (b) *Mwembe*, near Matola's, south of the Ruvuma; (c) *Mwaniqua*, near the south end of Lake Nyasa; (d) *Mangoche*, near Blantyre; (e) *Machinga*, on Mount Chikala and Zomba.[3]

PHYSICAL ENVIRONMENT

The Yao boundary on the west, where they mix with Nyanja peoples of the east lake shore, is a line of hills about 1,500 ft. above the lake level, extending south to Mangoche. Starting north-east from the fertile valley of the Mandimba, there is a fairly level plain, watered by other tributaries of the Lujenda, as far as Matola's and Mtarika. On the east side of the Luchilingo river there is a fairly continuous line of mountain fastnesses and hills, and from the source of the Mainje to its confluence with the Ruvuma, there are lines of fastnesses to the east and west, traversed by steep mountain tracks. From the Mainje source to the Ruvuma the country is cut by deep streams and crossed by mountains 2,000 to 3,000 ft. high.[4] On the south bank of the Ruvuma, below the confluence with the Lujenda, the country is a semi-desert, with barren stony soil, little water, and plentiful game. The Yao also inhabit the western edge of the Makondi plateau, where the valley of the Ruvuma widens into a great plain. Here the sandstone of the Makondi plateau is denuded and the soil is barren and stony. The Makondi bush gives way to this open forest of mimosa and other trees.[5] Most of the Yao country in the east of Portuguese East Africa is tsetse infested, but in the interior, approaching the east shore of Lake Nyasa, it is capable of supporting fine herds.[6] (193) (192)

South Nyasa district is mountainous in the east; the plain in the west stretches into Dedza and Ncheu districts. Owing to scarcity of water in the dry season this plain is thinly populated. The soil of the plain is sandy, except on the shore of the lake and the river bank, where it is rich alluvial soil; in the hilly parts the soil is clayish. During the last few years the lake level has risen and on the lake shore and the banks of the Shire river water is plentiful throughout the year. Smaller rivers have enough water all the year round to supply villages. The average annual rainfall at Fort Johnston is 33 in. for the last six rainy seasons, but the general average is 28 in. The average mean temperature is 75° F. The climate in the plains and at Fort Johnston is hot and trying in the hot season, but cooler on the hills. The greater part of upper Shire district is below 2,000 ft. in altitude and hot and unhealthy. In the dry weather most rivers are (132)

[1] 1923, p. 62.

[2] 1948, p. 62. Naturally some of the earlier informants support Duke's classification, since they are mainly the sources on which it was based (Sidebotham, op. cit., Macaulay Sundown, 1901, p. xii). Affinity with the language of the Gulf of Guinea has been claimed for Yao by Dr. Albert Drexel, of Innsbruck, quoted by Meinhof, 1923, p. 3.

[3] Sidebotham, J., 1900, pp. xiv-xv; 1, 1899, p. 69.

[4] Thompson, 1880, pp. 69-78.

[5] Johnson, J., 1893.

[6] Hamilton, 1903, p. 12.

1: Tew E-4 (no date) 1950 FT7 Tao FT7

completely exhausted or reduced to a mere trickle. The average annual rainfall over the last ten years is 29·75 in. The shore waters of Lake Pamalombe are well stocked with fish. Both districts are well wooded, with a large variety of timber trees. In the dry sandy soil where the population is unable to live for lack of water, the prevalent type is mopane. A line of foothills from Zomba to Chikala are conserved as Forest Reserves.[1]

MAIN FEATURES OF ECONOMY[2]

The Yao are chiefly agriculturists, and in the old days were also hunters. As they live largely in tsetse-infested areas, they do not keep cattle, except for a few herds near Fort Johnston and Zomba, in Nyasaland, and on the east of Lake Nyasa,[3] in the mountains of the Ruvuma valley around Masuka's.[4]

Abdullah describes a time when the Yao were economically self-sufficient, making their own bark-cloth, weaving, burning herbs for salt, and working iron for the tools they needed. Nevertheless, the tradition of outward journeys for trading with the Arabs was well developed before the Europeans came to the country. They used to trade cattle and salt from the Mangonje and Lamwo for tobacco and hoes, and in exchange for slaves they got from the Arabs gunpowder, guns, swords, beads, coloured cloths, earthenware, and foodstuffs.[5] Slaving expeditions were among the most important activities of the chiefs.[6] The old tradition of the absence of the men from the village owing to these expeditions, is continued in modern times by soldiers and labour migrants to Southern Rhodesia and the Union. These men send back remittances to the area, but the main population is supported by agriculture. Cash is needed for purchasing salt and cloth, for paying certain dues and fines formerly paid in kind—adultery compensation, diviner's and initiation fees—as well as for tax and rent. Consequently, while certain crops, such as tobacco and ground-nuts, are grown for cash, any food crop is liable to be sold in one form or another in local markets or by the roadside.

The food crops are maize, sorghum, finger millet, sweet potatoes, ground-nuts, legumes. Fish is an important article of diet. Eggs are believed to cause sterility and are only eaten by those outside the child-propagating age; milk is disliked and never consumed.[7] *Termite alates* (flying ants) are a much relished food when they come out on nuptial flights. Rice is considered a superior food, and is eaten when possible on ritual occasions.[8]

Tobacco is the main cash crop, with individual production under the supervision of the Agricultural Department. The average cash earned per grower in 1943–4 was £5. 5s. This is overwhelmingly an external trade. Ground-nuts, which are sold at government-controlled markets to licensed buyers, bring in only a few shillings a year to the average seller. Women obtain cash by selling beer. At the lake shore the fishing industry is very important. Natives owning big nets are said to make between £10

[1] Murray, 1950, pp. 147–61.

[2] Unless otherwise stated, the information is from J. C. Mitchell, and relates to the Yao of south Nyasaland.

[3] Livingstone, 1874, pp. 72 and 80.

[4] See Livingstone, 1874, p. 68; Young, E., 1877, p. 130; Thompson, 1882, p. 78; Sclater, 1892, p. 402; Maughan, c. 1905, pp. 86–7; Lane, 1934, pp. 35–7.

[5] Stannus, c. 1902, p. 34.

[6] Young, E., 1877, p. 102.

[7] Abdullah, 1919, pp. 10–11, 28–30.

[8] Barker, 1934, p. 14.

2: Mitchell E-S (1946-1949) 1956 FTT Tao FTT

[33 [34 rapidly throughout the year. In the plains many small rivers flow quite strongly during the rainy season but dry up shortly afterwards and by July or August the water shortage becomes acute for many villages. In the rainy season plenty of shallow pools supply the wants of the people; as these dry up the women must go farther and farther afield to find water. To the east of the watershed of the plain the distance they may have to go is still within the bounds of possibility, but on the valley lip this is no longer so,[1] and large areas of the escarpment, especially to the south towards the Shire Highlands, are unpopulated. The Administration has been sinking wells in an attempt to increase the amount of land available for human habitation. It reports that soon after wells had been sunk villages moved there and started gardens;[2] this indicates the pressure of the population on the land. Within the area where most of my study was made, i.e. from the northern fringe of the Shire Highlands, agriculturists describe the soil as 'variable'. The Agricultural Officer at Zomba, writing of this area, said:

> In the valley of the Shire the soils may be described as rich sandy alluvium. Around the hills the soil is chiefly red with a high percentage of clay and a small percentage of sand. Much of the soil in the ridge of highland stretching from the Chikala hills in the south to the hills near Mount Mangochi in the north is sandy and poor, with pockets of good rich soil here and there. The soil improves as the land slopes down each side of the ridge to the west to the Shire Valley, and to the east to the shores of Lake Shirwa and Lake Chiuta.[3]

Climate

[32. The climate is the tropical monsoon type. The average annual rainfall over the years 1944-6 at the three stations, Jalasi, Nyambi and Mloomba, i.e. placed at even intervals throughout the area of study, was 41·89 inches.[4] The rainfall is slightly heavier in the higher areas. This rain falls almost entirely during the

[1] The relation of water supply to population distribution in Nyasaland is discussed by Dixey, F., 'The Distribution of the Population of Nyasaland', *Geographical Review*, xviii (April 1928), 274 ff.

[2] *Nyasaland Protectorate Report on Native Affairs* (Zomba, 1931), 47.

[3] *Report of the Agricultural Officer, Zomba, to the Director of Agriculture* (1944), (unpublished).

[4] I am indebted to the Agricultural Officer, Fort Johnston, for this information.

I: Mitchell E-5 (1946-1949) 1956 FZT Yao FZT

132

months November to March inclusive. Diagram 1 shows the distribution of the rainfall during the year. Very little rain falls during other months. The initial rains of the year are ushered in by conventional storms and very heavy downpours. This causes a heavy run-off, flooding of the rivers and lake shores, and much erosion of the parched land which by this time has become

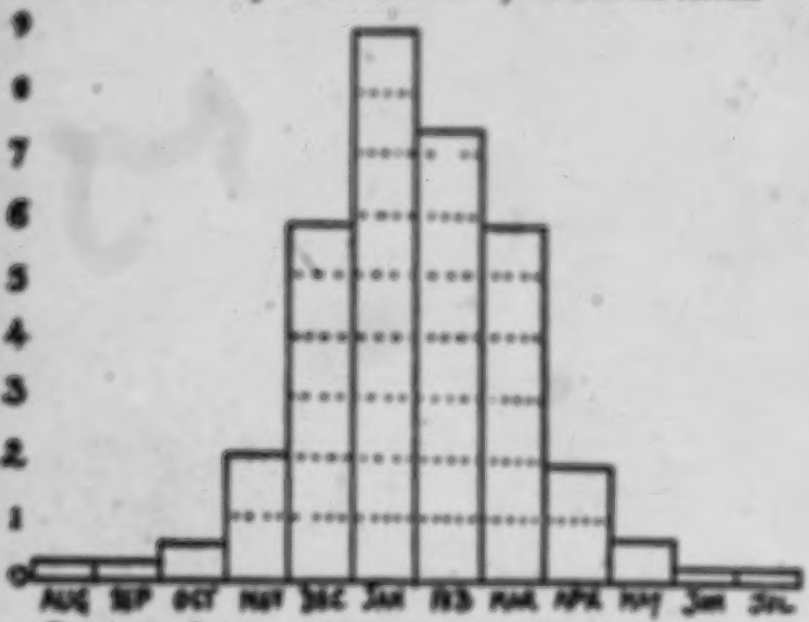

DIAGRAM 1. RAINFALL IN LINGUNDE AND FORT JOHNSTON DISTRICTS.
This diagram shows that almost the whole of the rainfall occurs between November and April.

very dusty. During December there is usually little rain for a short period of a week or two. After that the rains change their character and become more steady and drenching. They decrease in March and April, and thereafter, little rain falls.

The Yao concept of the seasons follows this feature of the climate. The year is divided into two seasons, called *caku*, the wet season, and *cau*, the dry season. The wet season is the one in which most agricultural activity is carried out. The gardens are hoed up and planted, weeded and tended, and the crops harvested, between the months of October and May. During

805
221

2: Mitchell E-5 (1946-1949) 1956 FFT Yao FFT

the dry season, in contrast to the busy wet season, there is much visiting and social activities are common. Dances and initiation ceremonies also are mostly held during the dry season. The only agricultural work done during this time is the clearing of the bush and the stacking of the brushwood ready for burning.

The temperatures are high. I have no records for the three stations in the area because recording has started only recently. It is hottest during the months just preceding the rains, i.e. September to December, and coldest during May to August. I have never heard of frost in the area so it is unlikely that the temperature falls below freezing point. Hornby records the mean maximum temperature for Liwonde as 82·5° F. and the mean minimum temperature as 59·5° F. These are for Liwonde station which is in the Shire Valley. The temperature for the plains and the highlands is probably a few degrees less.

Vegetation

The natural vegetation in this area varies from thick rain forest along the permanent watercourses to open grassland in the marshy patches. In forestry reserves and other places where the vegetation has not been cut out, trees 20 to 30 feet high predominate with thin undergrowth. Along the Shire Valley much of the vegetation is untouched, but in the highlands and on the plain most of the unprotected forest has been cut out for garden lands. In the open spaces between trees the land is covered by elephant grass six to eight feet high.

Population

The density of the population in Nyasaland as a whole is high in comparison with that in the surrounding territories.[1] Within the Territory itself the densities in some districts are as high as anywhere in Africa.[2] The population as a whole is concentrated in the highland districts of Dedza and the Shire Highlands. The districts in which I worked are less densely populated than most of the districts in the Southern Province, but of average density

[1] Expressing densities as total population per square mile. Nyasaland, 55·5 (1945); Tanganyika, 17·0 (1946); Portuguese East Africa, 14·5 (1938); Southern Rhodesia, 11·5 (1946); Northern Rhodesia, 5·0 (1946).

[2] Chiradzulu district, 309·8; Chaka, 151·9; Zomba, 152·4. *Nyasaland Census*, 1945, Table 8.

I. REGION OF MOZAMBIQUE

YAO, MAKUA-LOMWE, MAKONDE

In the region between Lake Nyasa and the east coast of Africa, between the Lukulenli 101
river in the north and the Zambezi in the south, there is a congeries of peoples whose 102
culture is very similar over the whole area. They are the *Makonde* group, the *Yao* and the *Makua-Lomwe* peoples. Of these only the Yao has been studied in detail. The scanty information about the other inhabitants of the region will be summarized after the fuller summary of the Yao material, so that points of similarity and difference may appear more clearly. Fortunately for this procedure the Yao occupy a central position, from which they may be taken to represent in many ways the culture of the neighbouring peoples.

The *Makonde* inhabit the Makonde plateau between the Lukulenli and Rovuma 500
rivers (39° and 41° longitude). Closely related to them are the *Mavia*, on the plateau of that name, south of the Rovuma; the *Mawa*, north of the Lukulenli river, on the Rondo plateau; and the *Matambwe*, in the Rovuma valley. It is possible that the *Ngindo*, *Ndonde*, and *Ndondende* should also be included. This group seems to be culturally and linguistically distinct in several points from the Makua and Lomwe, and the Yao, although they have in common the main features of political and social organization.

The region of the *Yao* is between the Rovuma, Lujenda, and Luchilingo rivers. 131
They also extend into Nyasaland and Tanganyika Territory.

The *Makua* occupy the area between the Lujenda and Lurio rivers and the coastal 500
strip from the mouth of the Lurio nearly to Quilimane.

The *Lomwe* are sometimes regarded as a sub-branch of the Makua, but probably have as much right to be called a separate tribe as the Yao. They are bordered by the Makua on the north, east, and south, and by Marevi on the west. South of them, around Quilimane and east of the Mlanje mountains, are the *Cuabo*,[1] related to the Makua and Lomwe, and also the *Podzo*, on the south bank of the Zambezi delta.

The region is forested lightly or heavily, and varies in character according to the 133
elevation, soil, and humidity. The coastal belt from Mozambique northwards has thorn-bush vegetation, thick in parts, giving way to light forest and grassland further inland. In the uplands there is good forest, broad-leaved and evergreen, and deciduous trees near the lake district. Throughout the territory there are narrow strips of richer 132
vegetation along the watercourses, and along the coast mangrove swamps occur at intervals. In the highlands the mornings and evenings are cool and pleasant for eight months of the year, and it is even cold at night in May and August, temperatures of 50° and 60° F. being common in the day. In the hot season the heat is severe, especially in the valley of the Rovuma. The mean annual rainfall for Mozambique is 39·50 in. and for Likoma on the lake, 39·9 in.[2]

The people are primarily cultivators, but the Yao keep cattle in the highlands. Both 105
Yao and Makua traded with the Arabs and were energetic slave-raiders. The coast Makua and most of the Yao are Islamized.

[1] *c*- pronounced as *ch*-.

[2] *Handbook of Portuguese East Africa*, 1920, pp. 68-77.

[P. 1]

2: Tew E-6 (no date) 1950 F'27 Tao F'27

(iv) Another group is on the south-west side of the lake, north of the Ngoni at Dedza and east of the Ngoni of Ncheu district.[1]

Although these are the main concentrations of Yao, smaller communities are scattered through most of the districts of south Nyasaland.

MAP SHOWING MORE IMPORTANT SITES CONCERNED WITH YAO INFILTRATION

Distribution of Yao shown as a percentage of the population of each district
(1931 Census)

Over 50%	South Nyasa	71%	10–20%	Dedza	18%
	Upper Shire	60%		Dowa	8%
				Mlanje	6%
30–40%	Blantyre	38%		Chiradzulu	5%
20–30%	Chiradzulu	28%	0–5%	Chikwawa	0%
	Zomba	26%		Ncheu	13%

History

Nothing is known of the history of the Yao before their settlement at Mozambique.[1] Their contact with the Arab traders from the east coast had probably continued for 200 years before the Europeans arrived.[2] When Lacerda wrote in 1798 the Yao were

[1] Cardinguan, 1898, p. 512.
[2] Stannus, n. 1922, p. 231; Hoskel, 1935, p. 7; Murray, 1932.
[3] Livingstone in 1866 noted the strength of Arab influence.

1: Tew E-4 (no date) 1950 FT7 Yao FT7

places it in the same group of languages as Makua, Nkonde, and Tumbuka, but not with Makonde. He counts Nginda as a dialect of Yao.[1] Guthrie places it in the Makonde group, but not in the Makua-Lomwe group.[2] 197

The Yao language shows very little dialectical variation, which is attributed to the age-long Yao love of travel. Such differences as occur are found chiefly in accent or idiom, not in grammatical structure. There are five different divisions corresponding to the different branches of the tribe: (*a*) *Amahale*, near the sources of the Ruvuma; (*b*) *Mwembe*, near Mataka's, south of the Ruvuma; (*c*) *Masaninga*, near the south end of Lake Nyasa; (*d*) *Mangoche*, near Blantyre; (*e*) *Machinga*, on Mounts Chikala and Zomba.[3]

PHYSICAL ENVIRONMENT

The Yao boundary on the west, where they mix with Nyanja peoples of the east lake shore, is a line of hills about 1,500 ft. above the lake level, extending south to Mangoche. Starting north-east from the fertile valley of the Mandimba, there is a fairly level plain, watered by other tributaries of the Lujenda, as far as Mataka's and Mtarika. On the east side of the Luchilingo river there is a fairly continuous line of mountain fastnesses and hills, and from the source of the Msinje to its confluence with the Ruvuma, there are lines of fortresses to the east and west, traversed by steep mountain tracks. From the Msinje source to the Ruvuma the country is cut by deep streams and crowned by mountains 2,000 to 5,000 ft. high.[4] On the south bank of the Ruvuma, below the confluence with the Lujenda, the country is a semi-desert, with barren stony soil, little water, and plentiful game. The Yao also inhabit the western edge of the Makondi plateau, where the valley of the Ruvuma widens into a great plain. Here the sandstone of the Makondi plateau is denuded and the soil is barren and stony. The Makondi bush gives way to thin open forest of mimosa and other trees.[5] Most of the Yao country in the east of Portuguese East Africa is tsetse infested, but in the interior, approaching the east shore of Lake Nyasa, it is capable of supporting fine herds.[6] 133 [131]

South Nyasa district is mountainous in the east; the plain in the west stretches into Dedza and Ncheu districts. Owing to scarcity of water in the dry season this plain is thinly populated. The soil of the plain is sandy, except on the shore of the lake and the river bank, where it is rich alluvial soil; in the hilly parts the soil is clayish. During the last few years the lake level has risen and on the lake shore and the banks of the Shire river water is plentiful throughout the year. Smaller rivers have enough water all the year round to supply villages. The average annual rainfall at Fort Johnston is 33 in. for the last six rainy seasons, but the general average is 28 in. The average mean temperature is 75° F. The climate in the plains and at Fort Johnston is hot and trying in the hot season, but cooler on the hills. The greater part of upper Shire district is below 2,000 ft. in altitude and hot and unhealthy. In the dry weather most rivers are 132

[1] 1945, p. 65.

[2] 1948, p. 62. Naturally most of the earlier informants support Doke's classification, since they are mainly the sources on which it was based (Hetherwick, op. cit., Meredith Sanderson, 1922, p. xii). Affinity with the language of the Gulf of Guinea has been claimed for Yao by Dr. Albert Drexel, of Innsbruck, quoted by Heckel, 1935, p. 7.

[3] Hetherwick, 3, 1900, pp. xix–xx; 1, 1893, p. 64.

[4] Johnson, 3, 1893.

[5] Thompson, 1882, pp. 67–78.

[6] Hornsby, 1923, p. 12.

2: Mitchell E-5 (1946-1949) 1956 FT7 Yao FT7

Topography and Surface Water

[131] 133 The Protectorate of Nyasaland lies between latitudes 09° 45′ S. and 17° 16′ S. and longitudes 33° E. and 36° E. It includes most of the surface of Lake Nyasa, the most southerly of the African Great Lakes. This dominant topographical feature, from which Nyasaland has taken its name, is part of the Great Rift Valley which runs from north to south through the territory. On the western, northern and eastern shores of the lake the coastline is fringed by great mountain masses, some of which drop sheer to the lake without a coastal shelf. In the south, the broad base of the valley forms a plain through which runs the Shire River which issues from Lake Nyasa. The western edge of the Rift Valley is fringed by the Kirk Range which sweeps north-westwards to form the Dedza Highlands. On the eastern fringe the valley forks to the east to form a plain between the Mangoche Highlands, the highest point of which is 5400 feet above mean sea level, and the great mass of the Shire Highlands, the highest point of which is 11,000 feet above mean sea level. This plain rises sharply about 800 feet in a mile or two to 2000 feet above mean sea level, eastwards from the Shire River. This forms the scarp of the Great Rift Valley. From the scarp it slopes gently to the west to the smaller lakes Chiuta-Amaramba and Shirwa which lie on the Portuguese East Africa border. Between the Mangoche Highlands and the Shire Highlands the plain is broken by the Chikala-Chaoni Range which protrudes almost to the shores of the Lake Shirwa, just to the north of its centre. This range, which forms an outstanding natural fortress, has played an important rôle in the history of Kawinga's followers.

The Mangoche Highlands, the ridge along the scarp of the Great Rift Valley and the Shire Highlands, here form the watershed between the rivers which flow into the Shire and thence the Zambezi, and the rivers which flow into the Chiuta-Amaramba, thence into the Lujenda and to the Rovuma River, or into Lake Shirwa which has no outlet. All the main rivers flow to the Indian Ocean. While the Great Rift Valley is well drained by the Shire River, the plain is inefficiently drained by the rivers which flow to the two smaller lakes. The shores around Chiuta and especially Shirwa are liable to inundation during the rainy season: hence the area depicted on the map is not all suitable for

2: Mitchell E-5 (1946-1949) 1956 FT7 Yao FT7

133 ●
[10a]

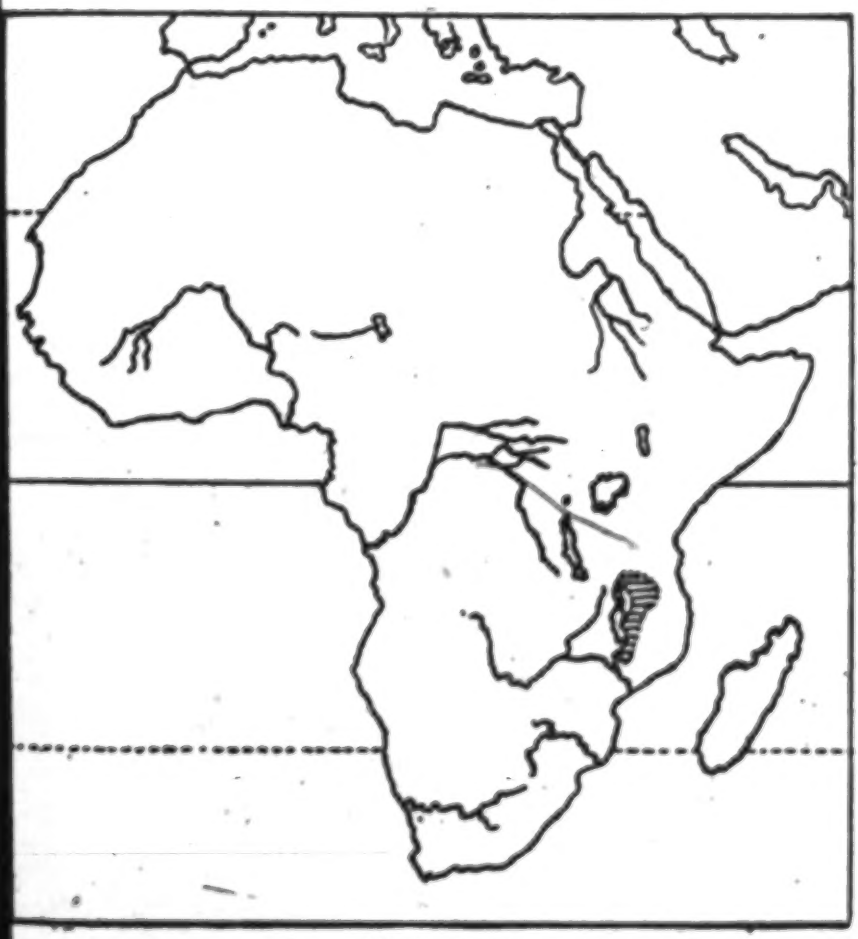

MAP I. AFRICA.
The shaded portion shows roughly where the Yao live.

human habitation. Large areas around Lake Shirwa are in fact marshlands in the wet season, and stretches of poor sandy and slightly saline soil during the dry season.

Generally speaking the distribution of surface water throughout 133
this area is variable. The highlands are on the whole well 312
supplied with streams which rise in the mountains and flow

2: Mitchell E-5 (1946-1949) 1956 FT7 Yao FT7

133 swiftly throughout the year. In the plains many small rivers flow quite strongly during the rainy season but dry up shortly 312 afterwards and by July or August the water shortage becomes acute for many villages. In the rainy season plenty of shallow pools supply the wants of the people ; as these dry up the women must go farther and farther afield to find water. To the east of the watershed of the plain the distance they may have to go is still within the bounds of possibility, but on the valley lip this is no longer so,[1] and large areas of the escarpment, especially to the south towards the Shire Highlands, are unpopulated. The Administration has been sinking wells in an attempt to increase the amount of land available for human habitation. It reports that soon after wells had been sunk villages moved there and started gardens :[2] this indicates the pressure of the population on 134 the land. Within the area where most of my study was made, i.e. from the northern fringe of the Shire Highlands, agriculturalists describe the soil as ' variable '. The Agricultural Officer at Zomba, writing of this area, said :

> In the valley of the Shire the soils may be described as rich sandy alluvium. Around the hills the soil is chiefly red with a high percentage of clay and a small percentage of sand. Much of the soil in the ridge of highland stretching from the Chikala hills in the south to the hills near Mount Mangoche in the north is sandy and poor, with pockets of good rich soil here and there. The soil improves as the land slopes down each side of the ridge to the west to the Shire Valley, and to the east to the shores of Lake Shirwa and Lake Chiuta.[3]

Climate

132 The climate is the tropical monsoon type. The average annual rainfall over the years 1944–6 at the three stations, Jalasi, Nyambi and Mlomba, i.e. placed at even intervals throughout the area of study, was 41·89 inches.[4] The rainfall is slightly heavier in the higher areas. This rain falls almost entirely during the

[1] The relation of water supply to population distribution in Nyasaland is discussed by Diary, F., 'The Distribution of the Population of Nyasaland', *Geographical Review*, xviii (April 1928), 274 ff.

[2] *Nyasaland Protectorate Report on Native Affairs* (Zomba, 1931), 47.

[3] *Report of the Agricultural Officer, Zomba, to the Director of Agriculture* (1944), (unpublished).

[4] I am indebted to the Agricultural Officer, Fort Johnston, for this information.

2: Mitchell E-5 (1946-1949) 1956 · FT7 Yao FT7

361
133

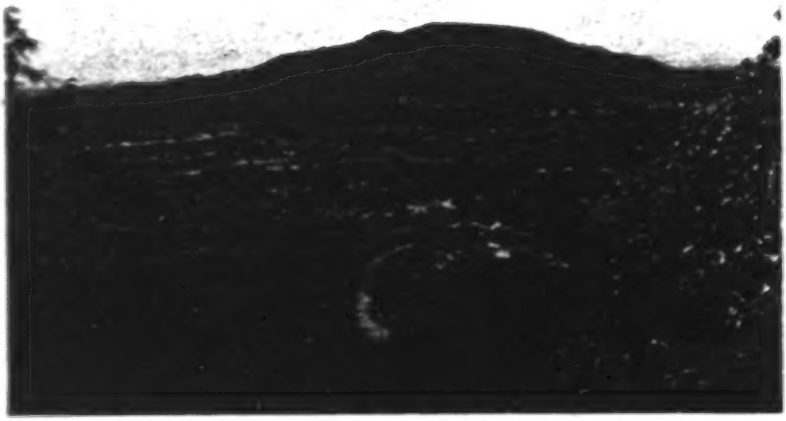

(*a*) Villages on the floor of the Rift Valley near Fort Johnston.
(*December 1949*)

(*b*) A village in the Domasi Valley near Zomba.
(*September 1949*)

PLATE III

[facing p. 46]

1: Tew E-4 (no date) 1950 FT7 Yao FT7

342 Yao make square houses.[1] Panelled doors and glass windows, deck-chairs and palm
177 furniture are becoming more and more popular. The men wear long Moslem robes
[29] and the women are clothed in cotton. In the rural areas there are usually a few crafts-
men who still ply their trades as carpenters and blacksmiths, though the latter no
326 longer smelt, but use scrap-iron.

Labour Migration

Statistics are not available for the Yao of Portuguese East Africa or Tanganyika
162 Territory. Yao constitute 34 per cent. of the total population of South Nyasa district,
464 15 per cent. of upper Shire, 11 per cent. of Blantyre and Zomba.[2] The proportion of labour migrants in these districts was in 1937 as follows:[3]

District	*Adult males fit to work*	*Percentage of emigrants*	*Number producing economic crops*	*Number of subsistence producers*	*Emigrants not heard of since 1930*
South Nyasa .	24,230	27·1	2,912 (12%)	12,025 (49%)	873
Upper Shire .	24,673	15·9	2,555 (10%)	16,629 (67%)	253
Blantyre . .	25,330	15·6	3,788 (15%)	10,165 (40%)	986
Zomba . .	26,679	12·4	7,720 (29%)	9,040 (33%)	553

[134] South Nyasa district, which is unfertile waterless bush with a long history of famine and food shortage, has the highest proportion of labour migrants. Upper Shire, though not fertile, is more prosperous, benefiting from the tobacco- and cotton-growing industries, and from the dried-fish trade.[4]

SOCIAL ORGANIZATION AND POLITICAL STRUCTURE[5]

Kinship and Local Grouping

611 Among the Yao succession is matrilineal and marriage mainly matrilocal. Accord-
[591] ing to some informants succession formerly passed down the line of brothers, as with the Bemba, but it now passes direct to the eldest sister's eldest son, or to descendants of other sisters in order of seniority.[6] Chiefly succession follows the same rule, but the most senior may be set aside for a more suitable candidate.[7]

611 Clan names, *lukoryo*, are inherited matrilineally, and formerly designated exogamous
614 units,[8] but the marriage prohibition has now ceased to operate. Holders of the same clan name are unable to trace descent from a common ancestress, and for commoners clan names seem to have quite lost their significance; they are, however, carefully remembered in the chiefly lines and in other lines of hereditary rank, such as village headmen.

614 Within the general kinship grouping of the clan, a smaller group is recognized,
613

[1] Werner, 1906, p. 144; Macdonald, 1882, vol. i, pp. 20–2, describes a round hut.

[2] 1931 Census information is taken because the district boundaries were changed between 1931 and 1945, so that the information in the 1945 Census would not be susceptible of comparison with that given in the 1937 Survey of Male Adult Population in the *Bell Report*, Appendix A.

[3] *Bell Report*, 1938, Appendix A.

[4] Smith, 1937.

[5] Information, unless otherwise stated, is from Mitchell, and relates to south Nyasaland Yao.

[6] Johnston, 1897, p. 471; Meredith Sanderson, 1920, p. 370. *Cf.* Macdonald, 1882, vol. i, p. 187, who says that brothers inherit before sister's son.

[7] Ibid., p. 189.

[8] Stannus, 4, 1922, p. 236.

2: Mitchell E-5 (1946-1949) 1956 FT7 Yao FT7

133 swiftly throughout the year. In the plains many small rivers
312 flow quite strongly during the rainy season but dry up shortly afterwards and by July or August the water shortage becomes acute for many villages. In the rainy season plenty of shallow pools supply the wants of the people; as these dry up the women must go farther and farther afield to find water. To the east of the watershed of the plain the distance they may have to go is still within the bounds of possibility, but on the valley lip this is no longer so,[1] and large areas of the escarpment, especially to the south towards the Shire Highlands, are unpopulated. The Administration has been sinking wells in an attempt to increase the amount of land available for human habitation. It reports that soon after wells had been sunk villages moved there and started gardens:[2] this indicates the pressure of the population on
134 the land. Within the area where most of my study was made, i.e. from the northern fringe of the Shire Highlands, agriculturalists describe the soil as 'variable'. The Agricultural Officer at Zomba, writing of this area, said:

> In the valley of the Shire the soils may be described as rich sandy alluvium. Around the hills the soil is chiefly red with a high percentage of clay and a small percentage of sand. Much of the soil in the ridge of highland stretching from the Chikala hills in the south to the hills near Mount Mangoche in the north is sandy and poor, with pockets of good rich soil here and there. The soil improves as the land slopes down each side of the ridge to the west to the Shire Valley, and to the east to the shores of Lake Shirwa and Lake Chiuta.[3]

Climate

132 The climate is the tropical monsoon type. The average annual rainfall over the years 1944–6 at the three stations, Jalasi, Nyambi and Mlomba, i.e. placed at even intervals throughout the area of study, was 41·89 inches.[4] The rainfall is slightly heavier in the higher areas. This rain falls almost entirely during the

[1] The relation of water supply to population distribution in Nyasaland is discussed by Dixey, F., 'The Distribution of the Population of Nyasaland', *Geographical Review*, xviii (April 1928), 274 ff.

[2] *Nyasaland Protectorate Report on Native Affairs* (Zomba, 1931), 47.

[3] *Report of the Agricultural Officer, Zomba, to the Director of Agriculture* (1944), (unpublished).

[4] I am indebted to the Agricultural Officer, Fort Johnston, for this information.

1: Tew E-4 (no date) 1950 FT7 Yao FT7

132 completely exhausted or reduced to a mere trickle. The average annual rainfall over the last ten years is 29·75 in. The shore waters of Lake Pamolombe are well stocked [136] with fish. Both districts are well wooded, with a large variety of timber trees. In the [137] dry sandy soil where the population is unable to live for lack of water, the prevalent type is *tsanya*. A line of foothills from Zomba to Chikala are conserved as Forest Reserves.[1]

MAIN FEATURES OF ECONOMY[2]

241 The Yao are chiefly agriculturists, and in the old days were also hunters. As they live largely in tsetse-infested areas, they do not keep cattle, except for a few herds [231] near Fort Johnston and Zomba, in Nyasaland, and on the east of Lake Nyasa,[3] in the mountains of the Ruvuma valley around Mataka's.[4]

439 Abdullah describes a time when the Yao were economically self-sufficient, making their own bark-cloth, weaving, burning herbs for salt, and working iron for the tools they needed. Nevertheless, the tradition of coastward journeys for trading with the Arabs was well developed before the Europeans came to the country. They used to trade cattle and salt from the Manganja and Lomwe for tobacco and hoes, and in [567] exchange for slaves they got from the Arabs gunpowder, guns, swords, beads, coloured cloths, earthenware, and foodstuffs.[5] Slaving expeditions were among the most important activities of the chiefs.[6] The old tradition of the absence of the men from the village owing to these expeditions, is continued in modern times by soldiers and labour migrants to Southern Rhodesia and the Union. These men send back remittances to the area, but the main population is supported by agriculture. Cash is needed for purchasing salt and cloth, for paying certain dues and fines formerly paid in kind—adultery compensation, diviner's and initiation fees—as well as for tax and rent. Consequently, while certain crops, such as tobacco and ground-nuts, are grown for cash, any food crop is liable to be sold in one form or another in local markets or by the roadside.

262 The food crops are maize, sorghum, finger millet, sweet potatoes, ground-nuts, [241] legumes. Fish is an important article of diet. Eggs are believed to cause sterility and are only eaten by those outside the child-propagating age; milk is disliked and never consumed.[7] *Termite alates* (flying ants) are a much relished food when they come out on nuptial flights. Rice is considered a superior food, and is eaten when possible on ritual occasions.[8]

249 Tobacco is the main cash crop, with individual production under the supervision 439 of the Agricultural Department. The average cash earned per grower in 1943–4 was £5. 3*s*. This is overwhelmingly an external trade. Ground-nuts, which are sold at government-controlled markets to licensed buyers, bring in only a few shillings a year 226 to the average seller. Women obtain cash by selling beer. At the lake shore the fishing 439 industry is very important. Natives owning big nets are said to make between £20

[1] Murray, 1932, pp. 147–61.

[2] Unless otherwise stated, the information is from J. C. Mitchell, and relates to the Yao of south Nyasaland.

[3] Young, E., 1877, p. 102.

[4] Livingstone, 1874, pp. 72 and 80.

[5] See Livingstone, 1874, p. 68; Young, E., 1877, p. 139; Thompson, 1882, p. 78; Sclater, 1893, p. 422; Maugham, 2, 1929, pp. 86–7; Laws, 1934, pp. 35–7.

[6] Abdullah, 1919, pp. 10–11, 26–30.

[7] Stannus, 4, 1922, p. 34.

[8] Barker, 1934, p. 14.

3: Stannus D-5 (ca. 1912) 1922 FT7 Yao FT7

137 *anjilu* is a more deadly poison and is not used in the poison ordeal but is administered with
278 intent to murder; it is usually given mixed with beer or in porridge. Death is said to be assured in a few hours. *Ligombola:* the Yao name of beetles belonging to the genus *Mylabris*, found in large numbers in June and July in the native gardens where they do much
● 136 damage to the bean crops. The name is, I think, more especially applied to a species with
278 yellow bands, those with red markings being said to be harmless. These beetles are prepared for poisoning food by frying and then grinding into a powder. In this form, they are administered with intent to murder or they may be taken for suicidal purposes, five or six beetles being used. These beetles contain cantharidin in a greater proportion than cantharis itself. The symptoms described by the natives as occurring after exhibition are constipation followed by high fever, and death eight hours later. This same beetle is known to other tribes and is the *sesanse* of the Anyanja.

The bile of the crocodile, *ngonge* (*ndulu*, Chin.); *ngonge* and *ndulu* also are used, meaning the gall-bladder. Crocodile gall has the reputation of being a powerful poison over nearly the length and breadth of Africa. It is known, I think, to all the tribes in Nyasaland. In this district, they qualify their beliefs by saying that the bile of crocodiles from Lakes Chilwa and Chiuta which do not eat men is not poisonous. The poison is also said not to be used on the Lower Shiré River where, and where only, crocodiles are eaten as food by the natives. Among the Yao, the gall-bladder is removed with the contained gall, dried, and then ground in a little mortar or on a stone. The dose of the powder is said to be as much as would cover a sixpence. Symptoms are said to be great pain in the stomach, swelling and discoloration of the tongue, and loss of speech. Public destruction of
[171] the gall-bladder of any crocodile which has been killed is said to be the custom on the West Coast of Africa, and the same is true of some tribes in Nyasaland as at Kotakota, but so far as I am aware, this is not done among the Yao.

The gall of other animals is similarly used, but among the Yao I am not quite certain of the species. *Lipiri*, the puff-adder, certainly is utilised, and I think other snakes, such as *Nalukuluti*, a grey, ash colored snake, *Liwyi*, a water-snake six feet long, and *Songo*, the crowing-snake. Certain lizards are also employed, such as *Likwakwala*, and frogs, both *Chiula* and the running frog, *Chisunsuna*. Scorpions too have found a place among poisonous preparations, so it is said, and likewise, the bile of some mammals. Bamboo fibre, animal hair, the bones of fish, and ground glass, I have also heard mentioned as being administered with the desire to produce a fatal enteritis.

Pupal cases made of twigs and the contained pupa (species of the family of *Psychidae*) called *chitemanga* or *chitema ngwi* (from *ku-tema*, "to cut" and *ngwi*, "fire-wood") are said when eaten by cattle to cause death. I cannot vouch for the truth of this nor can I say whether they are ever given to man.

137 A wild yam, *ndulu* (*malapa*, Chin.) is poisonous if not well boiled and the water thrown
278 away, but is not used as a poison so far as I know. The same is true of *ngonge*, a kind of cassava.

1: Tew E-4 (no date) 1950 FT7 Yao FT7

132 completely exhausted or reduced to a mere trickle. The average annual rainfall over
[136] the last ten years is 29·75 in. The shore waters of Lake Pamolombe are well stocked
with fish. Both districts are well wooded, with a large variety of timber trees. In the
● [137] dry sandy soil where the population is unable to live for lack of water, the prevalent
type is *tsanya*. A line of foothills from Zomba to Chikala are conserved as Forest
Reserves.[1]

MAIN FEATURES OF ECONOMY[2]

241 The Yao are chiefly agriculturists, and in the old days were also hunters. As they
live largely in tsetse-infested areas, they do not keep cattle, except for a few herds
[231] near Fort Johnston and Zomba, in Nyasaland, and on the east of Lake Nyasa,[3] in the
mountains of the Ruvuma valley around Mataka's.[4]

439 Abdullah describes a time when the Yao were economically self-sufficient, making
their own bark-cloth, weaving, burning herbs for salt, and working iron for the tools
they needed. Nevertheless, the tradition of coastward journeys for trading with the
Arabs was well developed before the Europeans came to the country. They used to
trade cattle and salt from the Manganja and Lomwe for tobacco and hoes, and in
[567] exchange for slaves they got from the Arabs gunpowder, guns, swords, beads, coloured
cloths, earthenware, and foodstuffs.[5] Slaving expeditions were among the most
important activities of the chiefs.[6] The old tradition of the absence of the men from
the village owing to these expeditions, is continued in modern times by soldiers and
labour migrants to Southern Rhodesia and the Union. These men send back remit-
tances to the area, but the main population is supported by agriculture. Cash is needed
for purchasing salt and cloth, for paying certain dues and fines formerly paid in kind—
adultery compensation, diviner's and initiation fees—as well as for tax and rent. Con-
sequently, while certain crops, such as tobacco and ground-nuts, are grown for cash,
any food crop is liable to be sold in one form or another in local markets or by the
roadside.

262 The food crops are maize, sorghum, finger millet, sweet potatoes, ground-nuts,
[241] legumes. Fish is an important article of diet. Eggs are believed to cause sterility and
are only eaten by those outside the child-propagating age; milk is disliked and never
consumed.[7] *Termite alates* (flying ants) are a much relished food when they come out
on nuptial flights. Rice is considered a superior food, and is eaten when possible on
ritual occasions.[8]

249 Tobacco is the main cash crop, with individual production under the supervision
439 of the Agricultural Department. The average cash earned per grower in 1943–4 was
£5. 3*s*. This is overwhelmingly an external trade. Ground-nuts, which are sold at
government-controlled markets to licensed buyers, bring in only a few shillings a year
226 to the average seller. Women obtain cash by selling beer. At the lake shore the fishing
439 industry is very important. Natives owning big nets are said to make between £20

[1] Murray, 1932, pp. 147–61.

[2] Unless otherwise stated, the information is from J. C. Mitchell, and relates to the Yao of south Nyasaland.

[3] Young, E., 1877, p. 102.

[4] Livingstone, 1874, pp. 72 and 80.

[5] Abdullah, 1919, pp. 10–11, 26–30.

[6] See Livingstone, 1874, p. 68; Young, E., 1877, p. 139; Thompson, 1882, p. 78; Sclater, 1893, p. 422; Maugham, 2, 1929, pp. 86–7; Laws, 1934, pp. 33–7.

[7] Beannus, 4, 1922, p. 34.

[8] Barker, 1934, p. 14.

2: Mitchell E-5 (1946-1949) 1956 FT7 Yao FT7

241

(*a*) Patchwork cultivation in Chiwalo area. Note how the natural vegetation has been cleared for staple gardens. Patches of ash from burnt garden refuse can be seen to the left. There are also two small villages in the foreground and a large village distinguishable by the dark patch of mango trees at the foot of the hill in the top left-hand corner.

(*October 1948*)

137

(*b*) A small village in typical surroundings in Chiwalo area.

(*August 1948*)

PLATE II [facing p. 12]

2: Mitchell E-5 (1946-1949) 1956 FT7 Yao FT7

the dry season, in contrast to the busy wet season, there is much visiting and social activities are resumed. Dances and initiation ceremonies also are mostly held during the dry season. The only agricultural work done during this time is the clearing of the bush and the stacking of the brushwood ready for burning.

The temperatures are high. I have no records for the three stations in the area because recording has started only recently. It is hottest during the months just preceding the rains, i.e. September to December, and coldest during May to August. I have never heard of frosts in the area so it is unlikely that the temperature falls below freezing point. Hornby records the mean maximum temperature for Liwonde as 82·3° F. and the mean minimum temperature as 59·3° F. These are for Liwonde station which is in the Shire Valley. The temperature for the plains and the highlands is probably a few degrees less.

Vegetation

The natural vegetation in this area varies from thick rain forest along the permanent watercourses to open grassland in the marshy patches. In forestry reserves and other places where the vegetation has not been cut out, trees 20 to 30 feet high predominate with thin undergrowth. Along the Shire Valley much of the vegetation is untouched, but in the highlands and on the plain most of the unprotected forest has been cut out for garden lands. In the open spaces between trees the land is covered by elephant grass six to eight feet high.

Population

The density of the population in Nyasaland as a whole is high in comparison with that in the surrounding territories.[1] Within the Territory itself the densities in some districts are as high as anywhere in Africa.[2] The population as a whole is concentrated in the highland districts of Dedza and the Shire Highlands. The districts in which I worked are less densely populated than most of the districts in the Southern Province, but of average density

[1] Expressing densities as total population per square mile. Nyasaland, 55·5 (1945); Tanganyika, 17·0 (1946); Portuguese East Africa, 14·5 (1938); Southern Rhodesia, 11·5 (1946); Northern Rhodesia, 5·0 (1946).

[2] Chiradzulu district, 309·8; Cholo, 191·9; Zomba, 152·4. *Nyasaland Census*, 1945, Table 8.

3:Stannus D-5 (ca. 1912) 1922 FT7 Yao FT7

Again, charm medicine may be contained in various articles which are also generally worn round the neck. The teeth and claws of the beasts of prey are so employed, generally arranged in pairs bound together so as to form a crescent and suspended from a string. The teeth of crocodiles, lions, leopards, and the claws of the same beasts and of some large birds of prey are thus employed. The teeth etc., are in themselves charms against injury, probably against what one might call homologous injury. The idea of stuffing them with medicine is probably a secondary consideration, a process of fortification of the charm so that its use comes to have a more powerful influence. It is interesting to see of late years that the native, recognizing the decorative value of these crescent-shaped amulets, has begun to copy them in lead and ivory. A series of these of graduated size is worn as a necklace by women. 751 757 825

When a medicine-man is consulted, part payment is made in advance, "payment to go and dig medicine (roots)." The rest of the payment is made when the cure is effected. Should a patient not be satisfied with his treatment and wish to consult some other medicine-man, he pays to the first a quarter of the fee he would have paid if his cure had been effected; this is called "paying him to get his medicine away." Unless this is done, should he recover later, he will be liable to claims for full fees from all of the medicine-men he has consulted; each will say his own medicine has gone on acting and has effected the cure. A medicine-man may take a case he is treating into his own house. 756

In prescribing medicine, very particular instructions are given with an embargo on certain things which may or may not have some use and significance. A medicine-man in 1901 at Malenya's, who inoculated every one in the forehead with bullet proof medicine, said that no one must step across a *mwai* (pestle for pounding grain), and no one must eat the leaves of the sweet potato.

A medicine-man always partakes of part of the decoction he is giving to a patient to show that it is harmless; I think these preparations are mostly inactive. I should hate to sample all the castor oil I have prescribed, though many natives have had suspicions about me when I have not done so.

Poisons. Though there are a large number of species in this country, both vegetable and animal, from which poison might be extracted, those that have gained any reputation among natives and have come under my observation are but few in number. *Mwai* (*Mwabi* Chin.) "the ordeal poison," is the bark of *Erythrophleum guineense*. The natives distinguish two varieties of *mwai*, the two trees differing slightly in leaf, flower and bark; *mwai* is the *Erythrophleum guineense*, the second variety known as *mperanjila* is doubtless an allied species. *Mwai* is the poison employed in the poison ordeal.[1] It is administered in a poisonous dose as a decoction of the bark, recovery or otherwise depending on whether or not the poison is voided by vomiting. Natives give as the symptoms headache, giddiness, disturbances of vision, vomiting and purging, with slowing of heart beat. *Mper-* 137 278 [695]

[1] Vide infra, p. 298.

3: Stannus D-5 (ca. 1912) 1922 FT7 Yao FT7

137 278 *ungilu* is a more deadly poison and is not used in the poison ordeal but is administered with intent to murder; it is usually given mixed with beer or in porridge. Death is said to be assured in a few hours. *Lipembela:* the Yao name of beetles belonging to the genus *Mylabris*, found in large numbers in June and July in the native gardens where they do much
136 damage to the bean crops. The name is, I think, more especially applied to a species with
278 yellow bands, those with red markings being said to be harmless. These beetles are prepared for poisoning food by frying and then grinding into a powder. In this form, they are administered with intent to murder or they may be taken for suicidal purposes, five or six beetles being used. These beetles contain cantharidin in a greater proportion than cantharis itself. The symptoms described by the natives as occurring after exhibition are constipation followed by high fever, and death eight hours later. This same beetle is known to other tribes and is the *nsunse* of the Anyanja.

The bile of the crocodile, *ngunga* (*ndulu*, Chin.); *ngunga* and *ndulu* also are used, meaning the gall-bladder. Crocodile gall has the reputation of being a powerful poison over nearly the length and breadth of Africa. It is known, I think, to all the tribes in Nyasaland. In this district, they qualify their beliefs by saying that the bile of crocodiles from Lakes Chilwa and Chiuta which do not eat men is not poisonous. The poison is also said not to be used on the Lower Shiré River where, and where only, crocodiles are eaten as food by the natives. Among the Yao, the gall-bladder is removed with the contained gall, dried, and then ground in a little mortar or on a stone. The dose of the powder is said to be as much as would cover a sixpence. Symptoms are said to be great pain in the stomach, swelling and discoloration of the tongue, and loss of speech. Public destruction of
[171] the gall-bladder of any crocodile which has been killed is said to be the custom on the West Coast of Africa, and the same is true of some tribes in Nyasaland as at Kotakota, but so far as I am aware, this is not done among the Yao.

The gall of other animals is similarly used, but among the Yao I am not quite certain of the species. *Lipiri*, the puff-adder, certainly is utilised, and I think other snakes, such as *Nalukulusi*, a grey, ash coloured snake, *Liuqi*, a water-snake six feet long, and *Sunga*, the crowing-snake. Certain lizards are also employed, such as *Likwalwala*, and frogs, both *Chiula* and the running frog, *Chinsenene*. Scorpions too have found a place among poisonous preparations, so it is said, and likewise, the bile of some mammals. Bamboo fibre, animal hair, the bones of fish, and ground glass, I have also heard mentioned as being administered with the desire to produce a fatal enteritis.

Pupal cases made of twigs and the contained pupa (species of the family of *Psychidae*) called *chitumangu* or *chitema nguni* (from *ku-tema*, "to cut" and *nguni*, "fire-wood") are said when eaten by cattle to cause death. I cannot vouch for the truth of this nor can I say whether they are ever given to man.

137 A wild yam, *ntwu* (*nsinga*, Chin.) is poisonous if not well boiled and the water thrown
278 away, but is not used as a poison so far as I know. The same is true of *ngunga*, a kind of cassava.

3: Stannus D-5 (ca. 1912) 1922 FT7 Yao FT7

Strophanthus is specially reserved for poisoning arrows and it is doubtful if it is ever given by mouth; *Kombe* is the name used in this country, but there are two species of strophanthus in Nyasaland, *Strophanthus kombe* and *Strophanthus courmontii*. The seeds and bark are used and, less commonly, the root. They are mixed with the roots of a shrub called *Nchaimbe*, pounded together and boiled, and the liquid used to anoint the arrows. The use of poisoned arrows is a Manyanja custom adopted to some extent by the Yao.

A number of poisons are also employed in catching fish, *Ngunga* and *Mtutu* being the most common, also *Kawaimbila Ngachi* (*Nkadzi*, Chin.), and *Chingunga*.

Witchcraft. In my article on the Anyanja,[1] reference is made to witchcraft and *mfiti*. Beside the Nyanja *mfiti* or the Yao *mauwi*, all tribes as far as I know in Nyasaland have firmly fixed among their beliefs, the conception of the supernatural human-flesh eater. It is a little difficult to define the term *mfiti* or *mauwi*, as it has come to have the somewhat generalized sense of one who practices witchcraft, but the original meaning is defined by Scott,[2] a person who has acquired the knowledge of occult medicine by which he can kill his fellow men; "what makes the power so dreaded is not that the *mfiti* exercises this power for reasons of spite but (as is supposed), to eat the body of his victim." It is at once interesting to note that the word *mfiti* does not belong, according to Scott, to the personal class of nouns but to the *pa-ma* class, which seems to imply that they believe a *mfiti* to be something outside the idea of a person. Among the Anyanja in Zomba district, however, the word belongs to the first class of nouns (the personal class) as also does *mauwi* in Chiyao.

The natives believe that any man in a village may be a *mfiti* or it might be more correct to say, is capable of changing into a *mfiti*. *Ufiti* is the state of being a *mfiti*; in Chiyao, *uauwi*.

As I have pointed out under *Diseases*, practically all illness and death are thought to be due to the machinations of some person or persons. The inciting motive which may cause a man to compass the death of another may be spite, revenge, etc., or the desires of *uauwi*. Until recent years, when the Government legislated to put down witchcraft, the charges of *uauwi* were everyday occurrences. Whether or not the prevalence of the idea of cannibalism has any substance in correspondingly frequent practice has never been and now probably never will be surely proved. Duff Macdonald believes it to be so.[3] It is true that native graves have been and are still rifled and that the graves of some Europeans have been so opened in the past, as I have learned from eyewitnesses. It seems probable that the graves were tampered with by natives with the object of removing the human remains, possibly to be eaten or to obtain portions of the body to use as charms. Mr. L. T. Moggridge,

[1] 'Notes on some tribes of British Central Africa,' op. cit., p. [illegible].
[2] Op. cit., p. [illegible].
[3] Africana, op. cit., vol. ii, p. [illegible].

2: Mitchell E-5 (1946-1949) 1956 FT7 Yao FT7

142
291
301
751
642

PLATE I

CHIEF KAWINGA THE SIXTH

He wears the traditional necklace of lions' claws which are medicated to protect him from the bullets of his enemies.

[facing p. iii]

2: Mitchell E-5 (1946-1949) 1956 · FT7 Yao FT7

142
291

PLATE VI

A typical village headman. He is dressed in white with a cloth thrown across his shoulder. He wears a white cap. This headman is not Government recognized, nor has he the right to wear a scarlet headband. He has no initiation rights.

(*November 1945*)

[facing p. 128]

2: Mitchell E-5 (1946-1949) 1956 FT7 Yao FT7

•142
291

PLATE VII
A lineage elder in Citenjele village, Malemia area.
(*August 1949*)

[Facing p. 136]

3: Stannus D-5 (ca. 1912) 1922 FT7 Yao FT7

142
242
534
301
516

CHIEF WENTENG WENTE DANCE

[End Plate 1]

3: Stanner D-5 (ca. 1912) 1922 FT7 Yao FT7

142
291
301

1

2

3

4

YAO NATIVES

[End Plate 2]

3:Stanner D-5 (ca. 1912) 1922 FT7 Yao FT7

534

291
357

1. Musical instrument, the mapindopindo, played by Yao youth

2. A Yao as a native dancer

304

142
301

3. Specimen of mutilation (Yao woman)

4. A Yao native

[End Plate 5]

3:Stannus D-5 (ca. 1912) 1922 FT7 Yao FT7

142
291
531

1. A Yao girl

2. Yao girl wearing bead apron

[177]
[304]

3. Two Yao girls wearing trade cloth

4. A young Yao woman

[End Plate 6]

3: Stannus D-5 (ca. 1912) 1922 FT7 Yao FT7

•142
291

1. YAO MAN WEARING HEADCLOTH COAST FASHION

2. THE SAME IN PROFILE

142
291
302

3. AN OLD NATIVE WHO HAS ALLOWED HIS HAIR TO GROW LONG

4. AN OLD WOMAN, SHOWING THE *mpelele* WORN IN THE UPPER LIP

[End Plate 7]

3: Stannus D-5 (ca. 1912) 1922 FT7 Yao FT7

532

142
291

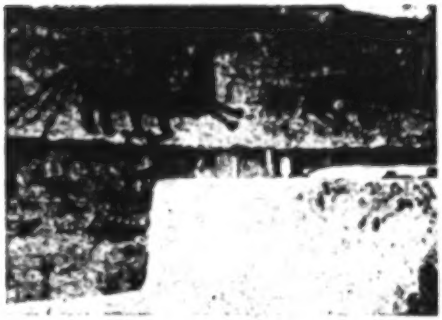

1. NATIVE PAINTING ON THE OUTSIDE OF A HUT WALL

2. A YAO NATIVE

142
302

3. MACHINGA YAO YOUTH

4. MASASINGA YAO YOUTH, SHOWING LOW GROWTH OF HAIR ON THE FOREHEAD

[End Plate 8]

276 made by boiling down the solution obtained by straining a decoction of water and the ashes of banana leaves; it contains, of course, some of the inorganic salts from the banana leaves. Without this addition, snuff is said to lack its proper aroma. The Angoni do not warm their snuff, but add a *mapodi* made in a similar way from cow dung.

262 **Food stuffs.** According to the general supposition, the native lives on a very monotonous diet, with a great excess of carbohydrates to the exclusion of proteids and fats. While
146 it is certainly true that he does not consider that he has been fed without his "whank" of flour (maize, millet, rice or cassava), still he feels that his meal is a poor one if it does not also include some secondary dish, such as beans, fish, or green vegetables cooked like spinach.

243 The grains chiefly grown and used by the Yao are maize, millet, and a certain amount
262 of rice.

Millets (sorghum): *Mapemba*, a tall variety, eight feet high, which is harvested late; *Mapemba ga mnunji*, a hairy variety; *Lisembelaka*, a short kind, five feet high, which matures early; *Mbelua*, characterized by the fact that the ripe grains will fall when the plant is shaken, and by a rather bitter taste; *Nandonji*, a variety six feet high which ripens quickly; *Kapila*, a shorter variety with a bitter taste but, according to the natives, a pleasant smell. (It makes good beer.)

Eleusine: *Lisunje*, about four feet high with very small grains; *Chindumba*, used for making a very strong beer; *Msundi*, a variety eight feet high. Cyprus grasses: *Usunje;*
[273] there are two varieties, *Kaumbata*, which curls up and is used for making strong beer, and another kind which is not curly.

Maizes: A number of varieties of the species *Zea mays* are grown by the Yao: *Chiawa*, a black-grained variety; *Nampalala*, red maize; *Lisunje*, the seeds of which are large, white, and dented; *Nacchinya*, with grains flattened on the free surface; *Kanjalanjala*, a dwarf maize about four feet high.

Rice (*Oryza sativa*): *Mpunga* (generic name *Likoti*), a large-grained variety; *Singana*, with very long grains; *Lingwindimba*, red rice; *Mbungala*, characterized by the strong, not unpleasant odor it gives out when being cooked.

244 Cassava: *Chinangwa* is grown everywhere, but the Yao do not prepare flour from it,
262 preferring to eat it raw at odd times. There are several varieties; *Chinangwa cha chiwera*, white cassava; *Chinangwa cha mbwani*, a brown variety; *Lisunga*, a bitter species (*Manihot utilissima*) which produces a very large root; *Chilasi* and *Kam"anya*, varieties of *Manihot sipi*, the former characterized by its long, tapering leaves, while the latter is a dwarf variety with a big root.

Beans: there are a number of species of beans grown: *Mbarawanda* (*Cajanus indicus*), *ngunda* (*Vigna catiang*), *mbawa* (*Phaseolus mungo*), *mbwanda*, (*Phaseolus sp.*), *ntambakodo*, (*Phaseolus sp.*), *ngondomalui*, and a ground bean *njama* (*Voandzia subterranea*).

524 857 on a stone. They explode with a noise like the sound of a gun. The boys send them off, one after the other, imitating fighting, or sometimes bang them down on some one's head. They go off, making the sound *ipuus!*

Small boys or girls among themselves play a clapping game called *ppajila*. One sings:

[539] "*Ppajila ppajila, ppajila ppajila, ppajila ppajila, juanyere mangi'jo pa mlango pa' mao!*
"Sweep sweep sweep sweep sweep sweep the one who has passed excrement the at the door at his mother's,

Nagumbe, kumo, kawili!" etc.,
let him clap once, twice!" etc.

They all clap together at the word "once," "twice," and so on. No one knows how many times they are going to be called on to clap, and some one is sure to clap when no word is given and so is caught and made fun of, as the one who has misbehaved.

[152 AD] *Likwata* (*ku-kwata*, to clap): simple clapping when pleased with anything is commonly indulged in, mostly by women and girls.

Little girls play at making little pots. This is called *gumbaiwipa*, (*ku-gumba chiwipa*, to model a pot). They also play at pounding grain, called *chindichi*, "learning to keep time," the word itself being an imitation of the sounds. Five or six pound in one mortar; in between strokes, they throw the wooden pestles up in the air, catching them again to time.

[539] "*Jutapikule katali jo! ajo mawi jo akulaga!*"
"The one who upsets little mortar the! that one witch is bewitching!"

This is the song of a game played by little girls. One sits in the middle with a *singwa* on her head, to represent a grain mortar, while the others form a ring round her holding hands. As they sing, the circle at one point swings in, and one of the girls passes in front of the one sitting down, her back to her all the time, the hands passing over her head. This they do one after the other very quickly and anyone who touches the girl in the middle, "who knocks down the mortar," takes the place of the girl in the middle.

[539] "*Asamowangu Asamowangu njakati who!*"
"Our wives, our wives, cutting off (interjection)!"

is the song of a game played by a lot of boys together or a lot of girls together; they do not join with one another. Two opposing groups are formed of equal numbers. Each is led by one of the older children and behind him is the rest of the group, each holding on to the cloth of the one in front. The followers of each leader represent his wives. The two parties then sing and maneuver for the leader to get at the tail of the other group and "collar" a wife or two from his opponent. It becomes very exciting. As they go faster and faster, some of the tail may get swung off and captured by the other side before they can again join their own.

4: Stannus D-5 (ca. 1909) 1910 FT7 Yao FT7 Marevi FR4

case *masavi* might be administered; if adjudged guilty the accused would be burned on a pile of wood. M 695

Evidence is given without taking any oath; a false witness is not punished. M 696

Justice is occasionally summary. At Mponda's, after conviction of adultery with one of the chief's wives, a man's throat was cut on the spot. Drowning was the usual punishment with Mponda.

Punishments for all offences practically meant payment.

CUSTOMS, SALUTATIONS, ETC.

The correct salutation among Machinga Yao and Mañanja on meeting is clapping the hands, the hands in front of and at right angles to the body parallel to each other, thumbs against the fingers. The clapping should be continued for ten minutes after having passed; after passing a chief it should be continued for half-an-hour. M Y 576

Another form consists in slowly beating the breast with the right hand, the head slightly inclined forward. The lower in station makes salutation first to the higher, a man to a chief, a woman to a man; exception is made in the case of an old woman, who is saluted by the man. Scattered all over the country a raising of one or both arms is a common form of salutation, but is probably only a corruption of the military salute. M Y [554] [888]

Slapping of the nates or thigh with the right hand is also seen, among old men usually. In imploring mercy from, or on the first occasion of meeting, the chief, a man lies prone on the ground and catching the foot of the chief, puts it on his neck—a sign of absolute submission. Women kneel at the approach of a man. Words and expressions of salutation are few—*Moyo* (=heart) being the only old expression used. Now commonly one hears a word (sounding like *sōnē*) probably a corruption of good morning, and the Swahili greeting *Sukuhri* with the double hand-shake of Mohammedans. M Y [201] [562] [177]

A man returned to his village after an absence rests awhile, then his wife comes to him and kneeling greets him, *moyo*, her husband returning *moyo*.

Years ago, a man of any importance was received with firing of guns and shouting. A headman is received now with *Ntungululu*, the women wobbling their tongues in their mouths. Ashes are put on the head as a sign of joy. M Y [152]

In the morning the husband and wife do not greet each other, but in the village friends "give each other good morning" (=*Moyo*). On waking in the morning, a woman cracks all her joints (=*Kulisa chala*). She then massages her husband and cracks the joints of his fingers. M Y [512] [576]

One man wishing to see another goes to his house, and squatting outside the door cries "*Icho!*" three times (=there), at the same time clapping his hands. If no answer be given he goes away, even though he knows the man is within, no answer meaning that the inmate does not wish to be seen. If invited to enter he does so, the man of the house rises and gives him salutation. He makes small M 574 576

3: Stanmus D-5 (ca. 1912) 1922 FT7 Yao FT7

824 778 be supposed to live in such trees. They are convenient natural objects for them to occupy, in fact practically the only ones to be found in villages. Trees may secondarily, therefore, be looked upon as in some degree sacred. About such trees strings or pieces of calico may be placed as an offering to the spirits of the departed. But the Yao do not erect little huts in their vicinity, hung about with strips of calico as is the custom among the Anyanja.

775 Macdonald[1] mentions the spirits in connection with Soche and other hills round Blantyre and supposes them to be the spirits of the places themselves. This I think is unlikely; they would probably turn out to be spirits bearing the names of long departed Anyanja chiefs whom the immigrant Amangoche Yao venerated just "to be on the safe side," since they had come and taken the country which long ago belonged to the former tribe. When approaching or passing any spot held to be the dwelling place of spirits, salutation is made by clapping the hands.

Spirits of the departed may enter into animals or may take the form of animals, [825] commonly lions and sometimes large snakes (python), but this belief is not so general among the Yao as among other tribes, in my opinion. An animal which is so possessed is called *lisyuka*, from *ku-syuka*, "to be transformed."

[774] Apart from this habitation of inanimate objects above mentioned by *maimu*, there is nothing that points to a belief in Animism among the Yao, so far as I know. Neither hills, rocks, streams, lakes, nor trees have their own spirits, nor are they endowed by the native mind with life.

Deceased persons appear to the living in dreams, the native apparently believing that the deceased appears in his material body.

775 They believe also in revelation of wishes of the deceased through the medium of the 787 living. The spirit of the deceased is supposed to enter into the medium. The medium, I am informed, is always a woman, never a man. From the descriptions of some of these 791 revelation séances, there can be no doubt that they are manifestations of *la grande hystérie*. The medium works herself up into a frenzy of excitement and in her delirium gives out the name of the deceased, the voice which speaks being that of the spirit within her. She rolls on the ground and foams at the mouth, uttering the word of revelation which is generally to the effect that some deceased chief's spirit is feeling aggrieved at the neglect of his tomb; the voice may go on to say that certain practices are forbidden, or demand that certain rites be observed by the people. The spirits which possess her are generally spoken of as *masoka*, a word which, though sometimes used as equivalent to *maimu*, usually seems to [158] have rather a sinister significance. Insane persons are called *masoka* and are thought to be possessed by a spirit, and vapor baths with exorcism may be practised for their cure. In the case of the death of anyone who is possessed, in answer to my interrogation, I have [761] been told that both the spirit which has entered into the man and his own *maimu* leave his body.

[1] Op. cit., vol. I, p. 70.

3: Stanzus D-5 (ca. 1912) 1922 F77 Yao F77

300 Shaving is a rite practised in mourning.[1] Some old men and women, especially medicine men, make a practice of never cutting the hair and never washing it (Pl. VII, fig. 2). One occasionally sees lunatics with very long hair in the villages.

[15]

The Yao do not follow the Angoni practice of tying up into tags the hair which has been allowed to grow long with palm leaf string, but they sometimes tie up a single wisp and make it up with medicine; this is called *hukondi* or *ujondi* (plur.).

The scalp may be shaved in various fashions. Among men, it is quite common to trim the hair on the forehead, *ku-ujikila;* they must not, however, trim the hair behind (Pl. XVIII, fig. 2). Women, on the contrary, trim both in front and back; a man doing so would be laughed at. A woman for the ceremony of *Likiwe* shaves the front hair a little higher still, but she must be careful not to do so at other times, otherwise she would make herself a laughing stock (Pl. XVIII, fig. 10). The hair is sometimes shaved on either side of the midline in front, in imitation of temporal baldness; both baldness and this method of shaving are called *masuwuse* (Pl. XVIII, fig. 4). Or again, among old Yao men the crown is shaved; this and natural baldness are called *hilusi* (Pl. XVIII, fig. 5). It is a fashion much affected by old men and great annoyance is caused them by any young upstart who does the same. Other methods include for men *mpila*, "a rat's path," an antero-posterior median line shaved (Pl. XVIII, fig. 9); *ingulungundinje*, two shaved lines made from back to front on either side of the head (Pl. XVIII, fig. 3); for men and women, *kipundulinde*, "the garden is (dead) overgrown", one lateral half of the head shaved (Pl. XVIII, fig. 7); for men, *nahacha* a crest of hair left along the mid-line, both sides of the head being shaved (Pl. XVIII, fig. 8); *mwezi* (*chilumbu cha mwezi*), "the moon," a crescent shaped area shaved on one or both sides of the head (Pl. XVIII, fig. 6).

The eyebrows and eyelashes are always left to grow normally among the Yao.

The Yao man used to take great pride in his beard; it was the object of a good deal of washing and combing. It grew to considerable length and was not cut or trimmed, but the hair growing down low over the throat was shaved, as was also the hair immediately below the mouth on the under lip and the moustache, as it was thought to get in the way when drinking. The whiskers were allowed to grow like the beard.

[832] [835] Hair on the chin or upper lip of a woman is rarely seen and on account of its rarity is much prized. Such hairs have a monetary value for making medicines, a single hair being sold for eight yards of calico or two shillings. Body hair is considered to be a sign of strength; on the chest, it is known as *shangulumu* (*ku-shangulumu*, to be strong). Body hair including hair on the back is by no means so rare as has been supposed. Sir H. H. Johnston says that he has never seen it,[2] a statement which shows lack of observation. The hair on the forearms and thighs is called *shenje* or *shembende;* Hetherwick translates this word,[3] I think wrongly, as hair on the body. Body hair is never removed in any way. A man named Katumbisi ("the little vulture") of Ulumba had a very large amount of body hair; he was likened to a baboon and was a source of much interest to the children who saw him.

[1] Vide supra, p. 264. [2] British Central Africa, op. cit., p. 398. [3] Op. cit., p. 111.

pressed. Two contingents of Sikhs were sent unsuccessfully to take Kawinga's fortress in Chikala in 1894; Makanjira was defeated in 1894, Kawinga, Jalasi, Matipwiri, and Tambala in 1896.[1] They were later allowed to return, but they were not recognised as chiefs by the Administration.

The end of tribal wars and of slave-raids made large defensive settlements unnecessary, and the peace saw the splitting up of communities, which rendered the task of the Administration more difficult. The abolition of domestic slavery, by reducing the power of headmen, further contributed to the tendency to live in small scattered settlements. In 1912 the Nyasaland District Administration Ordinance was passed with the object of concentrating the villages into larger communities.

The first movement of Yao from Portuguese East Africa to Masasi took place about the end of the 1850's. According to one account they were originally expelled from the territory between Mataka's and Unangu by the Maseko Ngoni.[2] Then the Makua attacked them, breaking up the tribe still more, so that they migrated north to Masasi, the south-west of the Makonde plateau, and the banks of the lower Ruvuma. At Masasi they were again attacked by Ngoni, but defeated them, and then retired to the Makonde plateau, where they were again attacked by Ngoni. There is a tradition that at some time after 1850 the region was toured by an emissary of the Sultan of Zanzibar, 'Bakiri', who gave the whole country to Matola, a Yao chief, to rule from Newala. In the area between Masasi and the Ruvuma river the Yao are in a majority and politically supreme over their neighbours the Makonde, Makua, Ngindo, Matambwe, and Ndonde.[3] At Mtua, on the Makondi plateau, there is a settlement of Yao who were rescued from the Ngoni on the east shore of Lake Nyasa by Captain Engelhardt, and transferred there. These in outward appearance could hardly be distinguished from the Swahili of the coast.[4]

Demography

The Yao population of Nyasaland has increased steadily but its relation to the total population has not increased:

1911		1931		1945	
Yao population	*Percentage of total population*	*Yao population*	*Percentage of total population*	*Yao population*	*Percentage of total population*
185,363	13·4	246,713	13·6	281,177	12·74

Even in the predominantly Yao areas the population is not homogeneous, either tribally or linguistically. In the three areas in which there are a large number of Yao (Kawinga and Liwonde of Zomba district and Nyambi of Fort Johnston), they represent roughly 48·6, 75, and 73 per cent. of the total population, the next most important section being *Nguru* (Lomwe) immigrants from Portuguese East Africa.[5] Some Nguru call themselves Yao when questioned.

The density in these areas is respectively 65·5, 32, and 52 per square mile.[6] This

[1] Codrington, 1898, p. 520; Meughan, n. 1909, pp. 86, 120-6, 130-3; Scheer, 1893, p. 402.
[2] Livingstone, 1874, p. 70.
[3] Weule, 1909, pp. 108-46.
[4] Ibid. p. 48.
[5] Mitchell and Comm, 1926, 1931, and 1945.
[6] 1945 Comm.

2: Mitchell E-5 (1946-1949) 1956 FT7 Yao FT7

the dry season, in contrast to the busy wet season, there is much visiting and social activities are resumed. Dances and initiation ceremonies also are mostly held during the dry season. The only agricultural work done during this time is the clearing of the bush and the stacking of the brushwood ready for burning.

The temperatures are high. I have no records for the three stations in the area because recording has started only recently. It is hottest during the months just preceding the rains, i.e. September to December, and coldest during May to August. I have never heard of frosts in the area so it is unlikely that the temperature falls below freezing point. Hornby records the mean maximum temperature for Liwonde as 82·3° F. and the mean minimum temperature as 59·3° F. These are for Liwonde station which is in the Shire Valley. The temperature for the plains and the highlands is probably a few degrees less.

Vegetation

The natural vegetation in this area varies from thick rain forest along the permanent watercourses to open grassland in the marshy patches. In forestry reserves and other places where the vegetation has not been cut out, trees 20 to 30 feet high predominate with thin undergrowth. Along the Shire Valley much of the vegetation is untouched, but in the highlands and on the plain most of the unprotected forest has been cut out for garden lands. In the open spaces between trees the land is covered by elephant grass six to eight feet high.

Population

The density of the population in Nyasaland as a whole is high in comparison with that in the surrounding territories.[1] Within the Territory itself the densities in some districts are as high as anywhere in Africa.[2] The population as a whole is concentrated in the highland districts of Dedza and the Shire Highlands. The districts in which I worked are less densely populated than most of the districts in the Southern Province, but of average density

[1] Expressing densities as total population per square mile. Nyasaland, 55·5 (1945); Tanganyika, 17·0 (1946); Portuguese East Africa, 14·5 (1938); Southern Rhodesia, 11·5 (1946); Northern Rhodesia, 5·0 (1946).

[2] Chiradzulu district, 309·8; Cholo, 191·9; Zomba, 152·4. *Nyasaland Census*, 1945, Table 8.

2: Mitchell E-5 (1946-1949) 1956 FT7 Yao FT7

for the Territory as a whole. Within these districts[1] there is a population of 117,035. This estimate is based on an actual count and is probably more accurate than the usual questionable estimates of African population. The population as shown by the censuses over the last 35 years has been increasing rapidly. Between 1931 and 1945 in Kawinga, Liwonde and Nyambi areas it increased from 39,154 to 64,840 which represents an annual rate of increase of 3·5 per cent. This is due partly to immigration and partly to natural increase, but it is difficult to estimate which is the more important since immigration figures for Africans are unobtainable.[2] The density of the population in these areas, in 1945, is set out in Table I.

TABLE I

DENSITIES OF POPULATION IN TRIBAL AREAS: 1945

Chiefdom	Area in sq. miles	Total Population	Density per sq. mile
Jalasi	800	40,287	50·4
Nyambi	131	7335	56·0
Kawinga	682	44,789	65·7
Liwonde. . . .	396	12,176	30·7
Malemia	50	12,448	248·9
All areas	2059	117,035	56·8

Source: Areas from the Provincial Commissioner, Southern Province. Population from the detailed returns of the 1945 Census.

Of these areas Malemia has the highest density, 248·9 per square mile. This is on the fringe of the highlands which are the

[1] From the 1945 Census. These areas are Kawinga, Liwonde, Nyambi, Jalasi and Malemia. Other Machinga chiefdoms are Mponda (18,701), Kalembo (11,260), Nsamala (11,582), and Nsumanje (17,467), but in these I have spent only a few days and I do not include them in the main analysis. I also spent some time in Kandi area (12,245) in Fort Johnston district, and Nuja area (17,195) in Blantyre district, but these are not Machinga Yao, and I only refer to them to illustrate points. My generalizations do not apply to them.

[2] There is some evidence that the natural rate of increase would double the population in 25 years. See Mitchell, J. C., 'An Estimate of Fertility in some Yao Hamlets of Liwonde District of Southern Nyasaland', *Africa*, xix, 3 (Oct. 1949), 293–308.

2: Mitchell E-5 (1946-1949) 1956 FT7 Yao FT7

economic centre of Southern Nyasaland and much land has been alienated to Whites there. Liwonde area, which has only 30·7 to the square mile, has large parts that are unpopulated because of the lack of surface water on the escarpment of the Rift Valley.

This population is by no means homogeneous, tribally or linguistically, but culturally the tribes are all very similar. The Yao, Nguru and Nyanja, who comprise most of the population, live in villages under village headmen; marry uxorilocally; have similar practices and beliefs in sorcery and disease. Table II

TABLE II

TRIBAL COMPOSITION OF THE CHIEFDOMS: 1945

Chiefdom	Total Population	Percentages of Tribes			
		Yao	Nguru	Nyanja	Ngoni
Jalasi	40,287	81·3	12·4	5·9	0·2
Nyambi	7335	73·2	26·8	0·0	0·0
Kawinga	44,789	48·7	35·7	14·4	1·2
Liwonde	12,176	73·2	19·6	5·2	0·1
Malemia	12,448	73·1	9·6	13·7	1·6

Source: Nyasaland Census, 1945. Abstracted from the detailed returns at the District Commissioner's Offices at Zomba and Fort Johnston.

shows the tribal make-up of the five areas with which I am concerned. Three-quarters of the population in all these areas are Yao. In Kawinga area, in which non-Yao tribes are most numerous, only one-half of the people are Yao, but included in this area are the two Mpotola subordinate chieftains Ngokwe and Chikweo, whose followers are predominantly Nguru (42·7 and 55·7 per cent).[1] If we exclude these two chiefdoms, the proportion of Yao in the rest of Kawinga area is 55·6 per cent. Nyambi and Kawinga areas, lying as they do against the Portuguese East African boundary, have the greater proportion of Nguru. Within Kawinga area the concentration of the Nguru along the boundary is also shown. Chiwalo chiefdom, which lies to the west of Kawinga area, has only 15 per cent Nguru,

[1] It seems here that the Mpotola may have been enumerated as Nguru and Nyanja.

[text continues on p 16]

6: Mitchell E-5 (1946-1947) 1949 FT7 Yao FT7

[161] 163 165 This is partly confirmed by the fact that the increase in total population for parts of the Liwonde district, with which this survey was concerned, according to the official census, is about 2·69 per cent. per annum.[1] At this rate we could expect the population to double itself in about 26 years. A net reproduction-rate of 1 would mean that the population would double itself in one generation which we may take in this case to be about 25 years. Some of the increase shown in the census is no doubt due to immigration from Portuguese East Africa, but the high replacement rate suggested by this material tends to confirm the opinion of one Administrative official, who maintained that immigration has virtually ceased since 1931.

5. General Summary and Conclusion

From material collected in three groups of hamlets in Liwonde district of Southern Nyasaland it appears that the average gross reproduction-rate within the sample over the last ten years was about 2·9 while the net reproduction-rate was about 2·2.

(114) There is no reason to suppose that the fertility of this sample is vastly different from that in any other part of the district, since the hamlets visited were casually selected; nevertheless, the sample is not a random one (in the statistical sense) and it is unsafe to generalize from it.

The Nyasaland Administration has only recently introduced machinery for the registration of births and deaths.[2] Until, therefore, these statistics are collected there seems to be no alternative but to rely on estimates as uncertain as those made in this paper.

[1] The population of Kawinga, Liwonde, and Nyambi sections of what was formerly known as Liwonde district or Upper Shire District of Nyasaland, increased from 39,154 in 1926 to 64,840 in 1945. Extracted from the crude census returns in the D.C.'s office in Zomba.

[2] Actually the forms for this registration do not tabulate all the categories of information necessary for the calculation of the gross and net reproduction rates. Such tabulations are mainly of the ages of the mothers and ages at death, and they have been excluded, no doubt, because it is assumed that this information is unobtainable. It is to be hoped, however, that when the system has become established, these categories will be introduced.

Résumé

MALÉDICTIONS DES NUER (see p. 288)

600 L'auteur cite de nombreux exemples des malédictions employées parmi les Nuer et indique l'importance comparative s'y attachant, suivant le degré de parenté entre la personne qui prononce la malédiction et celle à laquelle elle est destinée. La malédiction des morts est plus redoutable que celle des vivants, et l'on s'attend à ce qu'un homme qui emporte au tombeau le sentiment d'avoir subi une injustice fasse à son ennemi du mal affligeant plusieurs générations. Des malédictions prononcées s'efficieront que rarement le bétail puisque faire du mal au bétail nuit à toute la lignée et pas seulement à l'individu. Pour être efficaces, les malédictions n'ont pas besoin d'être exprimées en paroles — une imprécation silencieuse, ou même un sentiment de dépit, peuvent avoir la même force qu'une malédiction prononcée.

[P.141 C]

through one or other incumbent of the position of village headman.[4] Succession to posts of authority, including that of the chief, is matrilineal. Ideally the succession should pass to the first-born son of a man's eldest sister, but this is not always followed, for the personal qualities of the successor are most important.

The total African population of the area studied is 65,000. There are one or two Indian traders and two Europeans permanently resident in the area. One European is a missionary in the north-east corner and the other an Agricultural officer in the north centre of the area. Part of the area is administered by the District Commissioner, Zomba, and part by District Commissioner, Fort Johnston, and these officers tour the districts under their jurisdiction. Occasionally other White officials and labour recruiters appear, but in the main, Whites are not often seen in this area. The one road traversing it is usually impassable for a part of the rainy season.

175 167

pressed. Two contingents of Sikhs were sent unsuccessfully to take Kawinga's fortress in Chikala in 1894; Makanjira was defeated in 1894, Kawinga, Jalasi, Matipwiri, and Tambala in 1896.[1] They were later allowed to return, but they were not recognized as chiefs by the Administration.

The end of tribal wars and of slave-raids made large defensive settlements unnecessary, and the peace saw the splitting up of communities, which rendered the task of the Administration more difficult. The abolition of domestic slavery, by reducing the power of headmen, further contributed to the tendency to live in small scattered settlements. In 1912 the Nyasaland District Administration Ordinance was passed with the object of concentrating the villages into larger communities. [567] [667]

The first movement of Yao from Portuguese East Africa to Masasi took place about the end of the 1850's. According to one account they were originally expelled from the territory between Mataka's and Unangu by the Maseko Ngoni.[2] Then the Makua attacked them, breaking up the tribe still more, so that they migrated north to Masasi, the south-west of the Makonde plateau, and the banks of the lower Ruvuma. At Masasi they were again attacked by Ngoni, but defeated them, and then retired to the Makonde plateau, where they were again attacked by Ngoni. There is a tradition that at some time after 1850 the region was toured by an emissary of the Sultan of Zanzibar, 'Bakiri', who gave the whole country to Matola, a Yao chief, to rule from Newala. In the area between Masasi and the Ruvuma river the Yao are in a majority and politically supreme over their neighbours the Makonde, Makua, Ngindo, Matambwe, and Ndonde.[3] At Mtua, on the Makondi plateau, there is a settlement of Yao who were rescued from the Ngoni on the east shore of Lake Nyasa by Captain Engelhardt, and transferred there. These in outward appearance could hardly be distinguished from the Swahili of the coast.[4]

Demography

The Yao population of Nyasaland has increased steadily but its relation to the total population has not increased: 161

1921		1931		1945	
Yao population	*Percentage of total population*	*Yao population*	*Percentage of total population*	*Yao population*	*Percentage of total population*
185,363	15·4	246,713	15·4	281,177	13·74

Even in the predominantly Yao areas the population is not homogeneous, either tribally or linguistically. In the three areas in which there are a large number of Yao (Kawinga and Liwonde of Zomba district and Nyambi of Fort Johnston), they represent roughly 48·6, 75, and 73 per cent. of the total population, the next most important section being *Nguru* (Lomwe) immigrants from Portuguese East Africa.[5] Some Nguru call themselves Yao when questioned. 162

The density in these areas is respectively 65·5, 32, and 52 per square mile.[6] This

[1] Cadrington, 1898, p. 320; Maughan, 2, 1909, pp. 86, 120–6, 132–3; Scheer, 1893, p. 422.
[2] Livingstone, 1874, p. 72.
[3] Weule, 1909, pp. 108–46.
[4] Ibid. p. 48.
[5] Mitchell and Census, 1926, 1931, and 1945.
[6] 1945 Census.

1: Tew E-4 (no date) 1950 FT7 Yao FT7

162. relatively close settlement should be contrasted with conditions 60 years ago, when villages consisted of from 10 to 20 huts, with an average population of 100.[1] The size of villages now ranges from a few huts to 60 or more, with a total average population of about 40 per village, ranging from 15 to 200.

From a sample taken from three groups of hamlets in Liwonde district, it appears that the average gross reproduction rate over the last ten years has been about 2·9, while the net reproduction rate was about 2·2.[2]

Statistics are not available for the Yao population of Portuguese Nyasaland. Livingstone noted that at Mtarika's on the upper Ruvuma (not the town now on the Lujenda but an older one) there was an immense population. Mataka's town had about 1,000 houses, and there were many villages around.[3] The Yao fastnesses at Unangu and Mtonya were also thickly populated.[4] In the barren country south of the Ruvuma, between its confluence with the Lujenda and the beginning of the Makondi plateau, the country was almost uninhabited.[5]

In Tanganyika the Yao are distributed as follows:[6]

District	*Total population*	*Total children*
Tunduru	32,761	13,315
Masasi	15,009	5,048
Kilwa	6,960	1,616
Lindi	6,415	1,574
Mikindani	1,914	483
Songea	7,550	2,879
Dar es Salaam	1,869	230
Rufiji	1,013	189
Tabora	1,919	520
Other districts	3,377	820
	78,299	26,674

Percentage children to adults	*Percentage males to females*		*Increase since*	
	Adult	*Children*	*1928*	*1921*
52	91	113	19,835	34,699

LINGUISTIC DATA

197. The Yao language is spoken over an area extending from near the east coast of Africa to the east shore of Lake Nyasa, and from the sources of the Ruvuma in the north to the Lujenda in the south.[7] There are also two small pockets of Yao who crossed the lake to the west side, who speak their own language.

Doke classifies it as one of the group of Bantu languages in the East Central Zone, which constitutes a bridge between the languages of the East and Central Zones. He

[1] Macdonald, 1882, p. 144.
[2] 1874, pp. 68, 72.
[3] Thompson, 1882.
[4] *Census of Native Population*, 1931, Table VI. There are also 4,832 people at Kilwa called Machinga, whose name indicates that they are probably of Yao origin.
[5] Mitchell, 4.
[6] Maples, 2, 3, 1893.
[7] Hetherwick, 3, 1900, p. xviii.

1: Tew E-4 (no date) 1950 FT7 Yao FT7

342 Yao make square houses.[1] Panelled doors and glass windows, deck-chairs and palm
177 furniture are becoming more and more popular. The men wear long Moslem robes
[29] and the women are clothed in cotton. In the rural areas there are usually a few crafts-
326 men who still ply their trades as carpenters and blacksmiths, though the latter no longer smelt, but use scrap-iron.

Labour Migration

162 Statistics are not available for the Yao of Portuguese East Africa or Tanganyika
464 Territory. Yao constitute 34 per cent. of the total population of South Nyasa district, 15 per cent. of upper Shire, 11 per cent. of Blantyre and Zomba.[2] The proportion of labour migrants in these districts was in 1937 as follows:[3]

District	*Adult males fit to work*	*Percentage of emigrants*	*Number producing economic crops*	*Number of subsistence producers*	*Emigrants not heard of since 1930*
South Nyasa .	24,230	27·1	2,912 (12%)	12,025 (49%)	873
Upper Shire .	24,673	15·9	2,555 (10%)	16,629 (67%)	255
Blantyre . .	25,330	15·6	3,788 (15%)	10,165 (40%)	986
Zomba . .	26,679	12·4	7,720 (29%)	9,040 (33%)	553

[134] South Nyasa district, which is unfertile waterless bush with a long history of famine and food shortage, has the highest proportion of labour migrants. Upper Shire, though not fertile, is more prosperous, benefiting from the tobacco- and cotton-growing industries, and from the dried-fish trade.[4]

SOCIAL ORGANIZATION AND POLITICAL STRUCTURE[5]

Kinship and Local Grouping

611 Among the Yao succession is matrilineal and marriage mainly matrilocal. Accord-
[591] ing to some informants succession formerly passed down the line of brothers, as with the Bemba, but it now passes direct to the eldest sister's eldest son, or to descendants of other sisters in order of seniority.[6] Chiefly succession follows the same rule, but the most senior may be set aside for a more suitable candidate.[7]

611 Clan names, *lukoryo*, are inherited matrilineally, and formerly designated exogamous
614 units,[8] but the marriage prohibition has now ceased to operate. Holders of the same clan name are unable to trace descent from a common ancestress, and for commoners clan names seem to have quite lost their significance; they are, however, carefully remembered in the chiefly lines and in other lines of hereditary rank, such as village headmen.

614 Within the general kinship grouping of the clan, a smaller group is recognized,
613

[1] Werner, 1906, p. 144; Macdonald, 1882, vol. i, pp. 20–2, describes a round hut.

[2] 1931 Census information is taken because the district boundaries were changed between 1931 and 1945, so that the information in the 1945 Census would not be susceptible of comparison with that given in the 1937 Survey of Male Adult Population in the *Bell Report*, Appendix A.

[3] *Bell Report*, 1938, Appendix A.

[4] Smith, 1937.

[5] Information, unless otherwise stated, is from Mitchell, and relates to south Nyasaland Yao.

[6] Johnston, 1897, p. 471; Meredith Sanderson, 1920, p. 370. Cf. Macdonald, 1882, vol. i, p. 187, who says that brothers inherit before sister's son.

[7] Ibid., p. 189.

[8] Stannus, 4, 1922, p. 236.

2: Mitchell E-5 (1946-1949) 1956 FT7 Yao FT7

161 economic centre of Southern Nyasaland and much land has been alienated to Whites there. Liwonde area, which has only 30·7 to the square mile, has large parts that are unpopulated because of 563 the lack of surface water on the escarpment of the Rift Valley. 162 This population is by no means homogeneous, tribally or linguistically, but culturally the tribes are all very similar. The Yao, Nguru and Nyanja, who comprise most of the population, [591] live in villages under village headmen; marry uxorilocally; have similar practices and beliefs in sorcery and disease. Table II

TABLE II

TRIBAL COMPOSITION OF THE CHIEFDOMS: 1945

Chiefdom	Total Population	Percentages of Tribes			
		Yao	Nguru	Nyanja	Ngoni
Jalasi	40,287	81·3	12·4	5·9	0·2
Nyambi	7335	73·2	26·8	0·0	0·0
Kawinga	44,789	48·7	35·7	14·4	1·2
Liwonde	12,176	75·2	19·6	5·2	0·1
Malemia	12,448	75·1	9·6	13·7	1·6

Sources: Nyasaland Census, 1945. Abstracted from the detailed returns at the District Commissioner's Offices at Zomba and Fort Johnston.

shows the tribal make-up of the five areas with which I am concerned. Three-quarters of the population in all these areas are Yao. In Kawinga area, in which non-Yao tribes are most numerous, only one-half of the people are Yao, but included in this area are the two Mpotola subordinate chieftains Ngokwe and Chikweo, whose followers are predominantly Nguru (42·7 and 55·7 per cent).[1] If we exclude these two chiefdoms, the proportion of Yao in the rest of Kawinga area is 55·6 per cent. Nyambi and Kawinga areas, lying as they do against the Portuguese East African boundary, have the greater proportion of Nguru. Within Kawinga area the concentration of the Nguru along the boundary is also shown. Chiwalo chiefdom, which lies to the west of Kawinga area, has only 15 per cent Nguru,

[1] It seems here that the Mpotola may have been enumerated as Nguru and Nyanja.

[text continues on p. 16]

2: Mitchell E-5 (1946-1949) 1956 FT7 Yao FT7

162 slightly more than the extreme southerly chiefdoms, Mposa and
563 Chamba. As we have seen, half the population of the two most easterly chiefdoms is Nguru.

The Nyanja are concentrated mostly along the Shire River banks and around the Lake Shirwa shores. Most in Kawinga are at the north end of the Lake Shirwa or in Mposa at Lake Shirwa [1] and, according to the census, in Ngokwe in the extreme north-east. It is possible that in Ngokwe some of the Mpotola have been enumerated as Nyanja.

Although my study was of the Yao, I cannot exclude these other ethnic groups from it. The specific percentages must not be considered as exact reflections of the tribal make-up in the area. Though the villages of the three main tribal groups tend to be distinct, and intermarriage is not as great as might be expected, there are increasing numbers of children of mixed tribal parentage. There is some value in the figures, but we must take into consideration the general political situation in these chiefdoms. I enlarge upon this theme later. Generally speaking, however, the Yao have come in as invaders, while most Nguru have come in as immigrants. The Yao have greater prestige both in the eyes of the Whites and in the general structure of the chiefdoms. Many Nguru therefore, who have been in this area for some time, have come to call themselves Yao if they are asked, especially by a White man. This is especially true of the Mpotola people where they are living under Yao chiefs. The Mpotola are technically Nguru but most have lost their own language and speak only Yao. The Administration did not classify the Mpotola as a separate tribe in the Census and it is difficult to decide whether they were included as Yao or Nguru. Most of the Mpotola headmen I have met in Yao chiefdoms have called themselves Yao until they were prevailed upon to qualify their claim. Allowing for some discrepancies in the figures, the table shows nevertheless that numerically the Yao outnumber any other tribe in the area. In general, the other tribes are members of the chiefdoms and take part in most of the social activities which occur within them. I outline later the position of their headmen in the general political structure, but I wish to set out here some general notes on the tribal background of the non-Yao groups.

563 The term Nguru is applied to a large group of people who call

[1] 32 per cent of the population in Mposa's area is Nyanja.

2: Mitchell E-5 (1946-1949) 1956 FT7 Yao FT7

175 When Livingstone passed the Lake in 1866 he found Mponda living in approximately the same place as his successor does to-day, and he mentioned that Kawinga was living on the west of Lake Malombe.[1] He also mentioned that the Machinga dominated the whole of this area, showing that by this time there had been considerable movement into it. When the Church of Scotland Mission was established at Blantyre in 1876, Duff MacDonald recorded that the disposition of the chiefs was as follows: Mlumbe to the north-west of Zomba; Kapeni near Blantyre at Sochi; Mpama at Chiradzulu; Kawinga at Chikala; Malemia on the south-west side of Mount Zomba, and the Matipwiri at Mount Mlanje.[2] These groups, except for Kawinga, still occupy the same positions to-day. At this time most of the movement into Nyasaland had ceased, and the Yao invaders had already set themselves up as rulers over the indigenous Nyanja. At the same time the Ngoni were making frequent forays into the Shire Highlands and the rest of Southern Nyasaland, so that the position was far from stable.

162 The distribution of the Yao to-day reflects the history of their movement into Nyasaland. The districts nearest and fanning out from the point of entry into Nyasaland, viz. the area due east of Fort Johnston, contain the largest proportion of Yao. The more distant the districts are, the smaller the proportion of Yao in them.

The Entry of the Missionaries

797 The Missionaries were the first Whites to settle in Nyasaland. When he was in Britain in 1858, Livingstone had recommended
175 the Shire Highlands as a suitable place for the establishment of a Mission. Inspired by his reports, the Universities Mission to Central Africa was founded, and in 1861 Dr. Mackenzie was sent out to establish the Mission. It was an ill-starred venture.[3] From the sociological point of view its significance is that it

[1] Waller, *Last Journals*, 109.

[2] MacDonald, D., *Africana or The Heart of Heathen Africa*, Simpkin Marshall (London, 1882), i, 31.

[3] Rowley, H., *The Story of the Universities Mission to Central Africa, from its commencement under Bishop Mackenzie, to its Withdrawal from the Zambesi*, Saunders, Otley & Co. (London, 1886), and *Twenty Years in Central Africa*, Wells Gardner, Darton & Co. (London, 1889), 3rd Edition.

2: Mitchell E-5 (1946-1949) 1956 FT7 Yao FT7

622 is when it is used by an Administrative village headman, as I
554 shall illustrate later, it will not serve a minor village headman
643 much to move out of one chiefdom to another if his object is to become recognized as an Administrative village headman. If he goes to another chiefdom he is automatically regarded as one of the most junior of the headmen. If he goes to another chiefdom as an Administrative village headman already, he takes with him his 'book' and to some extent the rank associated with it.

162 The size of Administrative villages as measured by the number
621 of tax-payers in them is about equal in all three categories
622 of village headmen. Table X sets out the distribution. The

TABLE X

DISTRIBUTION BY SIZE OF VILLAGES UNDER ABORIGINAL, INVADER AND NEWCOMER ADMINISTRATIVE HEADMEN

Tax-payers	Totals			Total	Percentages			Total
	Aborigines*	Invaders	Newcomers†		Aborigines	Invaders	Newcomers	
0–19	6	29	56	91	30·0	21·3	22·0	22·2
20–39	7	49	85	141	35·0	36·0	33·5	34·4
40–59	2	25	57	84	10·0	18·4	22·4	20·5
60–79	3	16	29	48	15·0	11·8	11·4	11·7
80–99	1	1	13	15	5·0	0·7	5·1	3·7
100–119	1	6	4	11	5·0	4·4	1·6	2·7
120–139	—	4	4	8	—	2·9	1·6	2·0
140–159	—	1	1	2	—	0·7	0·4	0·5
160–179	—	1	1	2	—	0·7	0·4	0·5
180–199	—	1	1	2	—	0·7	0·4	0·5
200–249	—	3	—	3	—	2·2	—	0·7
250–300	—	—	3	3	—	—	1·2	0·7
Totals .	20	136	254	410‡	100·0	99·8	100·0	100·1
Mean .	39·0	48·5	45·1	45·9				
S.E. .	8·7	4·2	2·8	2·2				

* Excludes one village whose size was unknown.
† Excludes 3 villages whose sizes were unknown.
‡ The total excludes an additional 10 villages for which full details were not recorded.

Administrative villages of the Aborigines, mostly Nyanja, appear to be rather smaller than those of the Invaders and Newcomers.

2: Mitchell E-5 (1946-1949) 1956 FT7 Yao FT7

There were only 20 villages in that sample and the difference may not be significant though the distribution is skewed to the smaller villages. The mean number of tax-payers under Invader village headmen was slightly larger than that under Newcomers, but the difference was not significant.[1] Among the Invaders are included the chiefs and *ndunas* who usually have villages of over 100 tax-payers. Smaller villages are less likely to break away from chiefs and *ndunas* than they are from Newcomers and less important men.

Village headmen may exploit their connections with the chief in their competition with their fellows for Government recognition. In Tables XI to XIV inclusive, I have used the material I collected in Mposa, Chamba, Chikweo and Ngokwe areas only, because I know that my survey did not include many headmen in Kawinga and Liwonde areas. The total in these tables includes both Administrative and non-Administrative village headmen. From Table XI it is clear that there is a

TABLE XI

PROPORTION OF ADMINISTRATIVE VILLAGE HEADMEN AMONG ALL VILLAGE HEADMEN OF THE THREE CATEGORIES IN CHIKWEO, NGOKWE, CHAMBA AND MPOSA AREAS

Type of Headman	Aborigines	Invaders	Newcomers	Total
Administrative . . .	12	61	77	150
Non-Administrative .	1	37	111	149
Total	13	98	188	299
% Admin. Headmen.	92·3	62·2	41·0	50·2

$n = 2$; $\chi^2 = 21{\cdot}34$; $p = 0{\cdot}00002$.

significantly greater proportion of headmen of Invader descent than headmen of Newcomer descent who are recognized as Administrative headmen.[2] The percentage of Aborigines who are Administrative headmen is highest of all but it is based on such a small number that not much value can be placed on it.

[1] Diff. of means = 3·4; S.E. of diff. = 4·5; C.R. = 0·76; $p = 0{\cdot}4472$.
[2] Diff. of per cent = 21·2; S.E. of diff. = 6·07; C.R. = 3·49; $p = 0{\cdot}00048$.

2: Mitchell E-5 (1946-1949) 1956 FT7 Yao FT7

TABLE XII

PROPORTION OF ADMINISTRATIVE VILLAGE HEADMEN AMONG ALL VILLAGE HEADMEN WHO ARE RELATED AND NOT RELATED TO THE CHIEF IN CHIKWBO, NGOKWE, CHAMBA AND MPOSA AREAS

162
621
622

Type of Headman	Relatives		Non-Relatives	Total
	Direct	Clan		
Administrative . . .	38	36	76	150
Non-Administrative .	16	24	109	149
Total	54	60	185	299
% Admin. Headmen.	70·4	60·0	41·1	50·2

$n = 2$; $\chi^2 = 17{\cdot}23$; $p = 0{\cdot}00018$.

Table XII shows that among the chief's direct relatives (i.e. those who can trace some direct link, matrilineally, patrilaterally or affinally to the chief) there are more Administrative headmen than among the relatives who are related only through clan links. Further, it shows that there are more Administrative headmen among the chief's relatives as a whole than among those headmen who are not related to him at all.

It seems probable also that village headmen have used their link to the chiefs through religion to prosecute their claims to rank. From Table XIII we see that there are more Moslem

TABLE XIII

PROPORTION OF ADMINISTRATIVE HEADMEN AMONG ALL VILLAGE HEADMEN OF THE SAME RELIGION AS, OR DIFFERENT RELIGION FROM, THAT OF THE CHIEF (ISLAM) IN CHIKWBO, NGOKWE, CHAMBA AND MPOSA AREAS

Type of Headman	Moslem	Christian	Pagan	Total
Administrative . . .	113	27	9	149
Non-Administrative .	93	31	21	145
Total	206	58	30	294*
% Admin. Headmen.	54·9	46·6	30·0	50·2

$n = 2$; $\chi^2 = 6{\cdot}97$; $p = 0{\cdot}03078$.

* Excludes 5 village headmen whose religion I did not record.

2: Mitchell E-5 (1946-1949) 1956 FT7 Yao FT7

Administrative headmen than either Christian or Pagan. The chiefs, of course, are all Moslem. 162

Lastly, the same trend is seen among those headmen who are of the same tribe as the chief, against those who are of other tribes (Table XIV). Here, however, the difference is so small 621 622

TABLE XIV

PROPORTION OF ADMINISTRATIVE HEADMEN AMONG ALL VILLAGE HEADMEN OF THE SAME TRIBE AS, OR DIFFERENT TRIBES FROM, THE CHIEF IN CHIKWEO, NGOKWE, CHAMBA AND MPOSA AREAS

Type of Headman	Same Tribe	Different Tribe	Total
Administrative	85	65	150
Non-Administrative	76	73	149
Total	161	138	299
% Administrative Headmen .	52·8	47·1	50·2

$n = 1$; $\chi^2 = 0{\cdot}95$; $p = 0{\cdot}3422$.

that it may easily have arisen by chance. These factors, however, do not operate independently. There are more co-tribesmen, co-religionists and relatives of the chief among the Invaders than among the other categories. In other words, the factors are all intercorrelated and it is possible to consider any particular factor as the independent variable. From the point of view of the people themselves, to be an Invader is to have one of the best claims on the chief to become an Administrative headman.

THE SIGNIFICANCE OF THE SCARLET HEADBAND

Government recognition therefore provides the means whereby headmen are ranked in two major categories. But Administrative village headmen themselves are ranked by a number of prestige-indicating characteristics. The most important of these are the right to wear a plain scarlet headband and the right to hold boys' and girls' initiation ceremonies. 622 554 292

Of these two additional marks of rank the more important is the right to wear the scarlet headband. This headband is wrapped round the head, turban fashion. Most village headmen wear a headband of some sort, either of white or coloured cloth,

6: Mitchell E-5 (1946-1947) 1949 FT7 Yao FT7

They do not form a representative sample though they were casually selected for study and are fairly well scattered in the district in which they are situated.

In all there were 762 men, women, and children normally resident in the hamlets. This represents about 1·2 per cent. of the total population of the area. By normally resident, I mean that these people are considered to be members of the hamlets, and if they were absent, were away on only short visits of, say, about a month.

I have thus counted polygynists as normal members of the hamlets, but have taken care to ensure that they were not included again if their second wives were in another hamlet of the groups studied. Men, women, and their children who had gone outside the area to seek work, for example, were not included.

The ages of all members of the population were estimated by relating the birth of the individual to some notable event, the date of which is known. In these hamlets it was always possible to find some old relative who could place the birth of younger people as occurring between notable events. After the two dates between which the birth occurred had been fixed, it was then possible to fix the date of birth more accurately by asking the older people to indicate the approximate size of the child at subsequent events, by picking out a suitably sized child in the village.

The following is the skeleton chronology used in this survey.

1870 Migration of Kawinga group from Kongwe Hill.
1881 First attack by the Makwangwara Angoni.
1884 Second attack by the Makwangwara Angoni.
1895 British attack on Mount Chikala, the stronghold of Kawinga.
1896 British attack on Mount Mangoche, the stronghold of Jalasi.
1905 Death of Kawinga of the Anthill.
1907 The departure of Mr. Hoare, Collector of Revenue, from the Chikala Station.
1908 Small-pox epidemic.
1913 Government regulations about the number of huts to a village (District Administration (Natives) Ordinance, 1912).
1914 Commencement of the First World War. This is a notable event because of the fighting in German East Africa, in which many Nyasaland African troops took part. Also many men were used as porters carrying war goods from the railhead to Fort Johnston on Lake Nyasa.
1918 End of First World War.
1919 Influenza epidemic.
1921 General famine. This is known locally as *sala sa Jim*, lit. 'the hunger of Jim'. Jim was an African Government clerk whose duty it was to dispense food to the starving populace.
1930 The coming of the famous *mchape* witchfinders. These people, trading on the beliefs of the population, induced practically the entire people to drink a potion to protect themselves from witchcraft. It is a most memorable event in the history of the area.[1]
1933 The introduction of Indirect Rule.
1940 The commencement of recruiting for the Second World War. The Liwonde district supplied a good proportion of men for the Army.
1946 End of the Second World War, i.e. the return of the soldiers.

The important thing about such a chronology is that the events should be deeply

[1] For details of this movement when it had penetrated to Northern Rhodesia, see A. I. Richards, 'A Modern Movement of Witchfinders', *Africa*, vol. viii (1935), pp. 448–61.

They are semi-subsistence cultivators who own no cattle and whose diet is therefore largely vegetarian, viz. sorghum and maize-meal with ground-nuts and beans and certain leaves together with a small quantity of cassava roots. 105

Marriages are contracted early in life with little difficulty and ceremony. Formerly girls were espoused as mere children, and this still happens, but whether the custom is falling away or not I could not check quantitatively because the memories of the old women who had been married as children forty or fifty years ago could not be relied upon. Table I shows the ages at first marriage for a sample of 121 married women for whom this information was available. 582

Where marriage takes place so early we can expect that the mean age when child-bearing commences will also be early. Table II shows the median age of mothers at the birth of their first child. 163

TABLE II. *Age of Mother at Birth of First child*

Present age-groups of mothers	*Age of mother at birth of first child*									*Total*	*Median age at birth of first child*
	12½–15	*15–17*	*17½–20*	*20–22½*	*22½–25*	*25–27½*	*27½–30*	*30–32½*	*Over 32½*		
Under 30	9	26	12	17	6	4	..	..	..	74	17·9
30–45	10	14	10	9	4	7	3	4	3	66	19·8
Over 45	5	7	9	9	3	6	1	3	1	46	20·6
Totals	24	47	31	35	13	17	6	7	4	186	19·3

From these two tables it is clear that nearly all women in the community are married early and that child-bearing commences very soon after marriage.

Table III shows the conjugal status of all women over the age of 15. 162

TABLE III. *Conjugal Status of all Women over the Age of 15*

Present age-groups	*Never married*	*Wives of*			*Divorcees*	*Widows*	*Total*
		Monogynists	*Polygynists*	*Labour migrants*			
Under 20	25	15	3	4	..	..	45
20–30	3	37	18	9	9	3	79
30–45	1	31	19	3	9	3	70
Over 45	..	14	10	1	11	16	52
Total	27	97	50	19	29	24	246

Here we see that of all women under 45 (194), 141 (73 per cent.) are married, though only 85 (45 per cent.), i.e. the wives of monogynists, have their husbands living permanently with them. Another 40 (20 per cent.) were married to men who were married to other wives, so that while their husbands were not living with them permanently they were nevertheless with them periodically. Eighteen other women (9 per cent.) were married to men who had left to work outside the area and hence were not living with their wives at all at the time of the survey. Visits by men to places of work outside the area may last 2 years or more. It should [595] [591] [167]

IT SHOULD

162 be noted that only 27—11 per cent. of the whole sample of 246 women—had never
589 married and that 23, 80 per cent., of these (or 10 per cent. of the total) were under the age of 20 and therefore stood a good chance of yet marrying. Furthermore, 2 of the 4 women over 20 who had not married were known definitely to be incapable of marrying (one is insane and the other has violent epileptic fits).

There were 53 women who were divorcees or widows (21·5 per cent.), but it should be noted that 27 (or 11 per cent. of the 246 women) were over the age of 45 and therefore were past, or nearly past, the child-bearing period. Those in the younger age-groups stood good chances of remarrying. Table IV shows that though
[586] the divorce rate is high[1] remarriage is common. By the time a woman's child-
[587] bearing period has ended she has been married on the average 1·7 times. Few marriages are contracted after child-bearing ceases.

TABLE IV. *Marriages and Dissolutions of Marriage experienced by all Women over the Age of 15*

162
586
587

Present age	*No. of women*	*No. of marriages contracted*	*No. of divorces experienced*	*No. widowed*	*No. still married*	*No. of marriages per woman*	*No. of divorces per woman*	*No. of marriages per woman ended by death of husband*	*No. of marriages per woman still existing*
15–20	45	22	1	..	21	0·49	0·02	0·00	0·46
20–30	79	104	38	4	64	1·32	0·45	0·05	0·81
30–45	70	121	50	16	55	1·73	0·71	0·23	0·79
Over 45	52	88	29	34	23	1·70	0·57	0·65	0·48
Total	246	335	116	54	163	1·36	0·47	0·22	0·67

842 These statistics, showing the early age of marriage, the early commencement of child-bearing, the high incidence of marriage among women, and the high rate of remarriage during the child-bearing period, all point to the high valuation of reproduction reflected in Yao culture. This is consistent with their social structure,
[182] [61] where the major corporate groups are kinship groups and reproduction is the principal method of recruitment to the group. Furthermore, because the standard of living is almost at subsistence level, children do not entail the economic losses
[593] they do in Western society. On the other hand, they are expected to support their
[888] aged parents when they themselves are economically independent. In other words, there are few factors militating against reproduction and many in favour of it.

554 We may expect the beliefs and customs surrounding child-birth to reflect the value
884 of reproduction. For instance, the Yao distinguish clearly between women who have
[182] borne children and those who have not. When a girl becomes pregnant for the
[842] first time she undergoes a special ceremony (*litido*) attended only by women who
[843] have borne children. This ceremony has many of the features of a *rite de passage* and appears to mark the passing of the woman to a new social status. Furthermore, women are ascribed status according to the number of children they have borne. The word *awuali* signifies a young woman who has not yet borne a child; *awuali*

[1] Between a third and a half of the marriages contracted by women had been dissolved by divorce by the time that the child-bearing period had ended.

844 believe that she will die. The man's representatives are therefore able to establish the child's paternity from the birth-pang confessions of the woman.

846 The child is kept in the hut where it was born, for six or seven days, while the umbilical cord dries and falls off. During this time (*lusili*) the child is unnamed, and [553] it is named only when it is taken out of the hut. Should it die during this period of seclusion it remains unnamed and is referred to by a special term (*litepa*, pl. *matepa*). [128] I have therefore been able to enumerate live births by means of the distinction made between miscarriages and still-births (*kwanenge*) and children who lived long enough to be referred to as *matepa*. After the birth of the child the woman may not have 846 intercourse for four or five months. To do so would be to endanger the life of the [854] child with a disease called *ndaka*,[1] which is contracted by a sexually inactive person 834 when he comes into contact with a sexually active person. The husband may have intercourse with a second wife, but must take care to medicate himself so that he does not endanger the life of his child. When the child is about 4 or 5 months of age the parents perform ritual intercourse and medicate the child against the mystical dangers of sexual activity; sexual relations are then resumed.

834 The Yao say that a second child should not be born while the first is still being [853] suckled. Since lactation continues for about two years I am uncertain whether monogynists remain continent, as they say they do, or whether *coitus interruptus* is 464 practised. It is quite usual for husbands to become labour migrants when their 842 children are still very young. I have known women to write to their husbands who are away working and tell them to return because their children have 'grown', i.e. have been weaned. Labour recruiters had difficulty in recruiting men immediately after the soldiers had been demobilized at the end of the war, because the women objected, saying that they had remained childless long enough and the men must first wait until children were born. However, actual examination of birth-dates [163] shows that children are sometimes born within a year of one another and sometimes there are quite big gaps. The two-year gap between children is probably an ideal which few attain.

3. The Estimation of Fertility

(a) *Sundbaerg's Age Divisions*

128 As a preliminary estimate of fertility, Sundbaerg's trichotomy of ages may be considered. The argument behind this division of the population into Youth, Middle Age, and Old Age is that those populations with a high proportion of youth have a greater tendency to increase. Table V shows this trichotomy for the Yao with the same material for some other populations shown for comparison. Where the gross reproduction-rate is known for the period shown in the table, this is included.

128 At any one time a certain proportion of the population is absent from the area, 162 usually at some labour centre. Hence the proportions of the population are distributed abnormally. In all there appeared to be a total of sixty-three men, women, and children absent from the hamlets, who would otherwise have been living there. Hence in Table V these have been included in the totals in the 'Yao with absentees' proportions.

[1] A disease of this sort is believed in by many Central African tribes. Among the Nyanja-speaking peoples it is known as *zunjala*. [171]

6: Mitchell E-5 (1946-1947) 1949 FT7 Yao FT7

Table V shows that the age-distribution for the Yao sample is very similar to certain other populations commonly held to have high birth-rates. There appears to be some correlation between the proportion of youth in a population and the gross reproduction-rate. Judging from the material presented in Table V a high gross reproduction-rate may be expected among the Yao where the proportion of youth is much higher than in the case of those whose gross reproduction-rates are quoted.

TABLE V. *Sundbarg's Age Divisions*

Population	Year	Youth 0–15	Middle age 15–49	Old age over 50	G.R.R.
Yao*	1946	45·4	43·6	11·0	..
Yao with shamans	1946	42·6	47·4	10·0	..
Honduras†	1940	42·6	47·7	9·7	..
Nicaragua	1940	42·9	47·7	9·4	..
Guatemala	1940	43·6	46·9	9·5	..
India	1931	39·9	50·4	9·7	..
Japan	1935	36·9	47·9	15·3	2·195‡
Bulgaria	1934	34·4	49·2	15·5	1·70
Czechoslovakia	1930	26·3	54·3	19·3	1·22
New Zealand	1936	25·3	52·7	22·0	1·04
Denmark	1940	24·0	54·1	22·0	1·08
Sweden	1940	22·4	54·8	24·6	0·89

* There were 45 in the sample whose ages were not known. These were all adults and have been included proportionately in the two adult groups.

† All data for other populations taken from *The League of Nations Statistical Yearbook 1942/44*.

‡ Interpolated between 1930 (2·195) and 1937 (2·145).

(b) The Proportion of Children under 5 to Women 15–50

Fertility may be judged more accurately than by this trichotomy by considering the proportion of children under 5 to the total number of women between the ages of 15 to 50, *i.e.* the fertility ratio.[1] In the whole sample there were 147 children under 5 and 192 women between the ages of 15 to 50. This is a ratio of 766 children per 1,000 women. However, women who are going away from the area for a long time, as, for example, wives of men who are going with their husbands to some labour centre, possibly in South Africa or Southern Rhodesia, usually leave their weaned children with their matrilineal relatives. This means that the ratio quoted (766 per 1,000) is, in reality, an over-estimate of the true ratio. In order to arrive at a nearer estimate of the ratio we must consider the children actually born to women in the sample. Table VI classifies all children both dead and surviving born to women between the ages 15 to 55. From this table we adduce that there were 191 women between the ages 15 to 50 (for whom details were available), and among them they had 141 surviving children under the age of 5. This is a fertility ratio of 738 per 1,000 women. Table VII shows the fertility ratio for 18 countries with their gross reproduction-rate for the same period as the fertility ratio.

[1] It is more usual to take the number of women between 15 and 44, though recently the age-group between 20 and 44 has been used. I have taken the age-limits 15 to 50 because of the early age of marriage, and because it appeared that the average age of cessation of child-bearing is about 50 (see Table VIII). For a discussion of the suitability of this measure of fertility where birth registration is not practised, see T. Lynn Smith, *Population Analysis*, McGraw Hill Book Co., New York (1948), p. 156.

6: Mitchell E-5 (1946-1947) 1949 FT7 Yao FT7

TABLE VI. *Live-born Children, Alive or Dead at Time of Survey. Mothers aged 15 to 55*

162
163

Age of mothers at time of survey	Mothers	Alive or dead	Number of years elapsed since birth of child: 15-19 ♂	15-19 ♀	10-14 ♂	10-14 ♀	5-9 ♂	5-9 ♀	0-4 ♂	0-4 ♀	15-54 ♂	15-54 ♀	5-14 ♂	5-14 ♀	0-4 ♂	0-4 ♀	Totals ♂	Totals ♀
30-4	8	A	..	1	0	0	..	4	3	6	6	6	1	1	0	0	14	20
		D	..	..	..	..	1	1	1	4	..	1	..	..	1	1	3	7
25-9	9	A	..	..	0	..	4	3	3	1	6	4	1	3	3	0	17	17
		D	..	..	..	..	1	..	1	1	1	3	..	1	..	..	..	..	7	5
20-4	10	A	..	..	..	1	4	4	9	7	10	11	4	3	8	9	1	7	40	42
		D	..	..	..	..	1	0	0	0	1	3	0	..	..	..	1	1	2	3
15-19*	18	A	..	..	..	..	..	1	0	3	3	8	6	3	7	12	6	8	26	32
		D	..	..	..	..	..	..	1	1	..	3	..	1	1	..	1	1	3	
30-4	29	A	..	..	..	..	..	..	..	..	4	7	8	8	8	13	16	9	36	38
		D	..	..	..	..	..	..	..	..	..	..	1	0	3	1	0	..	6	3
25-9	31	A	..	..	..	..	..	..	..	..	1	1	3	12	23	19	21	32	50	63
		D	..	..	..	..	..	..	..	..	..	..	1	3	0	1	4	1	7	3
20-4	28	A	..	..	..	..	..	..	..	..	..	..	..	1	3	0	11	17	16	20
		D	..	..	..	..	..	..	..	..	..	..	..	..	1	1	1	1	2	2
15-19	34	A	..	..	..	..	..	..	..	..	..	..	..	..	..	1	3	3	3	4
		D	..	..	..	..	..	..	..	..	..	..	..	..	..	..	1	1	1	1
15-24	11	A	..	..	..	..	..	..	..	..	..	..	..	..	..	..	..	..	..	..
		D	..	..	..	..	..	..	..	..	..	..	..	..	..	..	1	..	1	..
Totals	200	A	..	1	4	1	8	13	17	17	28	33	23	33	56	63	86	77	204	240
		D	..	..	..	..	3	3	9	8	1	10	4	7	8	4	11	1	37	37

* Excludes one woman whose children were not in the hamlet so that their ages could not be determined.

TABLE VII. *Fertility Ratios and Gross Reproduction-rates for Eighteen Countries*†

162
163
171

Country	Year	Fertility ratio†	G.R.R.
(Yao)	(1946)	(7·8)	..
Japan	1950	7·4	0·90
Chile	1950-2	5·8	0·96
Bulgaria	1956-7	4·7	1·70
Poland	1955-6	4·6	1·71
Union of S.A.	1951	4·3	1·48
Portugal	1950-2	4·6	1·54
Italy	1955-7	4·0	1·45
Canada	1951	3·7	1·38
Czechoslovakia	1950	3·6	1·32
Australia	1953	3·7	1·35
Norway	1950-1	3·6	1·43
Finland	1950-2	3·6	1·32
Denmark	1951	3·6	1·28
France	1956	3·5	1·26
New Zealand	1956	3·9	1·24
U.S.A.	1950	3·5	1·23
Switzerland	1951	2·9	1·08
Sweden	1950	2·3	0·90

* From The *League of Nations Statistical Yearbook 1951/52*. Only those countries which showed gross reproduction-rates based on direct census data and in which reliable age-groupings were used.

[128] † I have used the age-limits 15-50 in these calculations.

643 and determine petty native cases was conferred
622 upon the headmen, though the District Commis-
175 sioner was supposed to seek their advice when
648 necessary.

Therefore, from the time of conquest a pattern of superordination of the Whites and subordination of the Africans was established and the indigenous political system remained largely without official recognition until the Native Authorities Ordinance was passed in 1933. The major change wrought by this Ordinance was that Native Courts were planned and instituted by the Native Courts Ordinance of the same year. At the same time a Native Treasury was founded.

IV. The Present POSITION

643 wings to Portuguese East Africa. They were
175 allowed to return later and they took up their
648 positions in an area roughly outlined in the early
131 part of this paper. At the same time, owing to military action by the Portuguese a certain number of refugees were crossing the border into the Lake Chiuta area of Nyasaland.

TABLE I

Demographic Composition of Political Areas[1]

Sub. Area	Tot. Pop.	Admin. Vills.	Av. Pop. of Admin. Vills.	Tribal Composition			
				Ngoni	Yao	Chewa	Lomwe
N.A. Kawinga (Yao)	23,087	311	74	% 11	% 27	% 50	% 2
S.N.A. Gomba (Yao)	5,119	61	84	72	20	7	1
S.N.A. Mpeta (Yao)	4,411	60	74	49	19	32	—
S.N.A. Chiwalo (Yao)	2,202	19	116	80	15	5	—
S.N.A. Ngulwe (Mpondas)	2,868	21	136	16	43	40	1
S.N.A. Chikwere (Mpondas)	7,102	49	145	28	56	16	—
N.A. Liwonde (Yao)[2]	12,704	106	120	75	20	5	—
N.A. Nyambi (Yao)[2]	7,235	63[2]	116	73	27	—	—

162
643
631
[563]

B:Mitchell E-5 (1946-1947) 1949 FT7 Yao FT7
[P. 149 c]

643
162
631

[1] Abstracted from crude returns of 1941 census. District Commissioner's Office at Zomba and Fort Johnston.
[2] Census data for a newly created S.N.A., Dowa, not recorded separately.
Approximation only. Number of Administrative villages not ascertained.
[3] N.A.=Native Authority; S.N.A.=Subordinate Native Authority.

•162 643 631

	Total Pop.	Area sq. m.	Density per sq. m.
Kawinga	44,789	682	65·5
Liwonde	12,716	396	32·0
Nyambi	7,335	140	52·5

The Table I summarizes the present demographic position in the areas. The greater part of the area under study is divided between the Native Authorities Kawinga and Liwonde who call each other "brother". Kawinga as well as being a Native Authority with jurisdiction over five subordinate native authorities, is a chief over a certain number of villages in the same way as his subordinate native authorities are. These subordinate native authorities under Kawinga are:

631 1. *S.N.A. Cauka*, who is a matrilineal descendant of the first Kawinga's son and who still calls the present Kawinga "father", is in charge of an area along the south side of Mount Cikala;

2. *S.N.A. Mpase* is a matrilineal descendant of the son of the first Liwonde and therefore calls both Kawinga and Liwonde "father" (atati). His area lies near Lake Chilwa and contains a high proportion of the original Nyanja peoples of the area;

3. *S.N.A. Ciwalo's* area adjoins that of N. A. Nyambi at the north of Kawinga's sub-district. Ciwalo was a sister's son to one of the previous Kawinga's and his mother's brother had succeeded, illegally in the opinion of some, to the name of Kawinga V (see p. 147). Ciwalo succeeded to his mother's brother's name that he had before he took the name of Kawinga V. The present Kawinga VI who was known as Mbuga before he succeeded must call Ciwalo "my elder brother" (*akulumunga*);

4. *S.N.A. Ngulube* and 5. *S.N.A. Cikuso* are, as the Table shows, not Yao but Mpotola who are a people from Portuguese East Africa. The Mpotola have lost whatever language they had in the past and now speak Yao and as far as I could see follow Yao usage and custom. The areas under the jurisdiction of these S.N.A's lie along the north-east boundary of Kawinga's area adjoining the Portuguese territory. The Table also shows

6: Mitchell E-5 (1946-1947) 1949 FT7 Yao FT7

They are semi-subsistence cultivators who own no cattle and whose diet is therefore largely vegetarian, viz. sorghum and maize-meal with ground-nuts and beans and certain leaves together with a small quantity of cassava roots. 105

Marriages are contracted early in life with little difficulty and ceremony. Formerly girls were espoused as mere children, and this still happens, but whether the custom is falling away or not I could not check quantitatively because the memories of the old women who had been married as children forty or fifty years ago could not be relied upon. Table I shows the ages at first marriage for a sample of 121 married women for whom this information was available. 582

Where marriage takes place so early we can expect that the mean age when child-bearing commences will also be early. Table II shows the median age of mothers at the birth of their first child. 163

TABLE II. *Age of Mother at Birth of First child*

Present age-groups of mothers	Age of mother at birth of first child									Total	Median age at birth of first child
	12½–15	15–17½	17½–20	20–22½	22½–25	25–27½	27½–30	30–32½	Over 32½		
Under 30	9	26	11	17	6	4	..	..	..	74	17·9
30–45	10	14	10	9	4	7	3	4	3	66	19·8
Over 45	5	7	9	9	3	6	1	3	1	46	20·6
Totals	24	47	31	35	13	17	6	7	4	186	19·3

From these two tables it is clear that nearly all women in the community are married early and that child-bearing commences very soon after marriage.

Table III shows the conjugal status of all women over the age of 15. 162

TABLE III. *Conjugal Status of all Women over the Age of 15*

Present age-groups	Never married	Wives of			Divorcees	Widows	Total
		Monogamists	Polygamists	Labour migrants			
Under 20	23	13	3	4	..	..	43
20–30	3	37	18	9	9	3	79
30–45	1	31	19	7	9	3	70
Over 45	..	14	10	1	11	16	32
Total	27	97	50	19	29	24	246

Here we see that of all women under 45 (194), 141 (73 per cent.) are married, though only 83 (43 per cent.), i.e. the wives of monogamists, have their husbands living permanently with them. Another 40 (20 per cent.) were married to men who were married to other wives, so that while their husbands were not living with them permanently they were nevertheless with them periodically. Eighteen other women (9 per cent.) were married to men who had left to work outside the area and hence were not living with their wives at all at the time of the survey. Visits by men to places of work outside the area may last 2 years or more. It should [595] [591] [167]

6: Mitchell E-5 (1946-1947) 1949 FT7 Yao FT7

844 believe that she will die. The man's representatives are therefore able to establish the child's paternity from the birth-pang confessions of the woman.

846 The child is kept in the hut where it was born, for six or seven days, while the umbilical cord dries and falls off. During this time (*lusili*) the child is unnamed, and [553] it is named only when it is taken out of the hut. Should it die during this period of seclusion it remains unnamed and is referred to by a special term (*litepe*, pl. *matepe*). [128] I have therefore been able to enumerate live births by means of the distinction made between miscarriages and still-births (*kwasanga*) and children who lived long enough to be referred to as *matepe*. After the birth of the child the woman may not have 846 intercourse for four or five months. To do so would be to endanger the life of the [855] child with a disease called *ndaka*,[1] which is contracted by a sexually inactive person 834 when he comes into contact with a sexually active person. The husband may have intercourse with a second wife, but must take care to medicate himself so that he does not endanger the life of his child. When the child is about 4 or 5 months of age the parents perform ritual intercourse and medicate the child against the mystical dangers of sexual activity; sexual relations are then resumed.

834 The Yao say that a second child should not be born while the first is still being [553] suckled. Since lactation continues for about two years I am uncertain whether monogynists remain continent, as they say they do, or whether *coitus interruptus* is 464 practised. It is quite usual for husbands to become labour migrants when their 842 children are still very young. I have known women to write to their husbands who are away working and tell them to return because their children have 'grown', i.e. have been weaned. Labour recruiters had difficulty in recruiting men immediately after the soldiers had been demobilized at the end of the war, because the women objected, saying that they had remained childless long enough and the men must first wait until children were born. However, actual examination of birth-dates [163] shows that children are sometimes born within a year of one another and sometimes there are quite big gaps. The two-year gap between children is probably an ideal which few attain.

3. The Estimation of Fertility

(a) *Sundberg's Age Divisions*

128 As a preliminary estimate of fertility, Sundberg's trichotomy of ages may be considered. The argument behind this division of the population into Youth, Middle Age, and Old Age is that those populations with a high proportion of youth have a greater tendency to increase. Table V shows this trichotomy for the Yao with the same material for some other populations shown for comparison. Where the gross reproduction-rate is known for the period shown in the table, this is included.

128 At any one time a certain proportion of the population is absent from the area, 162 usually at some labour centre. Hence the proportions of the population are distributed abnormally. In all there appeared to be a total of sixty-three men, women, and children absent from the hamlets, who would otherwise have been living there. Hence in Table V these have been included in the totals in the 'Yao with absentees' proportions.

[171] [1] A disease of this sort is believed in by many Central African tribes. Among the Nyanja-speaking peoples it is known as *kanjoko*.

6: Mitchell E-5 (1946-1947) 1949 FT7 Yao FT7

Table V shows that the age-distribution for the Yao sample is very similar to certain other populations commonly held to have high birth-rates. There appears to be some correlation between the proportion of youth in a population and the gross 128 162 163 171

TABLE V. *Sundbarg's Age Divisions*

Population	*Year*	*Youth 0–15*	*Middle age 15–49*	*Old age over 50*	*G.R.R.*
Yao*	1946	45·4	45·6	11·0	..
Yao with abscesses	1946	42·6	47·4	10·0	..
Honduras†	1940	42·6	47·7	9·7	..
Nicaragua	1940	42·9	47·7	9·6	..
Guatemala	1940	43·6	46·9	9·5	..
India	1931	39·9	50·4	9·7	..
Japan	1935	36·9	47·9	15·3	2·19‡
Bulgaria	1934	34·4	49·2	15·2	1·70
Czechoslovakia	1930	26·3	54·3	19·5	1·22
New Zealand	1936	25·5	52·7	21·8	1·04
Denmark	1940	24·0	54·1	22·0	1·08
Sweden	1940	20·4	54·8	24·6	0·89

* There were 45 in the sample whose ages were not known. These were all adults and have been included proportionately in the two adult groups.

† All data for other populations taken from *The League of Nations Statistical Yearbook 1940/44*.

‡ Interpolated between 1930 (2·195) and 1937 (2·145).

reproduction-rate. Judging from the material presented in Table V a high gross reproduction-rate may be expected among the Yao where the proportion of youth is much higher than in the case of those whose gross reproduction-rates are quoted.

(b) *The Proportion of Children under 5 to Women 15–50*

Fertility may be judged more accurately than by this trichotomy by considering the proportion of children under 5 to the total number of women between the ages of 15 to 50, i.e. the fertility ratio.[1] In the whole sample there were 147 children under 5 and 192 women between the ages of 15 to 50. This is a ratio of 766 children per 1,000 women. However, women who are going away from the area for a long time, as, for example, wives of men who are going with their husbands to some labour centre, possibly in South Africa or Southern Rhodesia, usually leave their weaned children with their matrilineal relatives. This means that the ratio quoted (766 per 1,000) is, in reality, an over-estimate of the true ratio. In order to arrive at a nearer estimate of the ratio we must consider the children actually born to women in the sample. Table VI classifies all children both dead and surviving born to women between the ages 15 to 55. From this table we adduce that there were 191 women between the ages 15 to 50 (for whom details were available), and among them they had 141 surviving children under the age of 5. This is a fertility ratio of 738 per 1,000 women. Table VII shows the fertility ratio for 18 countries with their gross reproduction-rate for the same period as the fertility ratio. [114] 128 162 163 [854]

[1] It is more usual to take the number of women between 15 and 44, though recently the age-group between 20 and 44 has been used. I have taken the age-limits 15 to 50 because of the early age of marriage, and because it appeared that the average age of cessation of child-bearing is about 50 (see Table VIII). For a discussion of the suitability of this measure of fertility where birth registration is not practised, see T. Lynn Smith, *Population Analysis*, McGraw Hill Book Co., New York (1948), p. 158. [113]

6: Mitchell E-5 (1946-1947) 1949 FT7 Yao FT7

TABLE VI. *Live-born Children, Alive or Dead at Time of Survey. Mothers aged 15 to 55*

162
163

Age of mothers at time of survey	Mothers	Alive or dead	Number of years elapsed since birth of child: 35–9 ♂	35–9 ♀	30–4 ♂	30–4 ♀	25–9 ♂	25–9 ♀	20–4 ♂	20–4 ♀	15–19 ♂	15–19 ♀	10–14 ♂	10–14 ♀	5–9 ♂	5–9 ♀	0–4 ♂	0–4 ♀	Totals ♂	Totals ♀
30–4	8	A	..	1	2	2	..	4	3	6	6	2	1	1	2	2	..	2	14	20
		D	..	..	..	..	1	1	1	4	..	1	..	..	1	1	..	..	3	7
45–9	9	A	..	..	2	..	4	3	3	1	2	4	1	3	3	2	2	..	17	17
		D	..	..	..	..	1	..	3	1	1	3	..	1	..	..	..	..	7	5
40–4	22	A	..	..	..	1	4	4	9	7	10	11	4	3	8	9	3	7	40	42
		D	..	..	..	..	1	2	2	2	1	3	2	..	..	..	1	1	7	8
35–9*	18	A	..	..	..	..	..	1	2	3	3	8	6	3	7	12	6	8	26	35
		D	..	..	..	..	..	..	1	1	..	3	..	1	1	..	1	1	3	
30–4	29	A	..	..	..	..	..	..	..	..	4	7	8	8	8	15	16	9	36	39
		D	..	..	..	..	..	..	..	..	..	..	1	2	3	1	2	..	6	3
25–9	31	A	..	..	..	..	..	..	..	..	1	1	3	12	23	19	21	31	30	63
		D	..	..	..	..	..	..	..	..	..	..	1	3	2	1	4	1	7	5
20–4	28	A	..	..	..	..	..	..	..	..	..	..	..	1	3	2	11	17	16	20
		D	..	..	..	..	..	..	..	..	..	..	..	..	1	1	1	1	2	2
15–19	34	A	..	..	..	..	..	..	..	..	..	..	..	..	..	1	3	3	3	4
		D	..	..	..	..	..	..	..	..	..	..	..	..	..	..	1	1	1	1
13–14	11	A	..	..	..	..	..	..	..	..	..	..	..	..	..	..	..	..	..	..
		D	..	..	..	..	..	..	..	..	..	..	..	..	..	..	1	..	1	..
Totals	210	A	..	1	4	3	8	13	17	17	28	33	23	33	56	63	66	77	204	240
		D	..	..	..	..	3	3	9	8	2	10	4	7	8	4	11	5	37	37

* Excludes one woman whose children were not in the hamlet so that their ages could not be determined.

TABLE VII. *Fertility Ratios and Gross Reproduction-rates for Eighteen Countries**

162
163
171

Country	Year	Fertility ratio†	G.R.R.
(Yao)	(1946)	(758)	..
Japan	1930	574	2·30
Chile	1930–2	528	2·26
Bulgaria	1934–5	477	1·70
Poland	1931–2	462	1·71
Union of S.A.	1941	423	1·49
Portugal	1940–1	416	1·54
Italy	1933–7	400	1·43
Canada	1941	357	1·38
Czechoslovakia	1930	342	1·22
Australia	1933	327	1·05
Norway	1930–1	322	1·43
Finland	1930–2	322	1·21
Denmark	1940	322	1·08
France	1936	319	1·00
New Zealand	1936	299	1·04
U.S.A.	1940	295	1·03
Switzerland	1941	259	1·06
Sweden	1940	255	0·90

* From *The League of Nations Statistical Yearbook 1942/44*. Only those countries which showed gross reproduction-rates based on direct census data and in which reliable age-groupings were used.

[128] † I have used the age-limits 15–50 in these calculations.

There is, as one would expect, a close association of the fertility ratio with the gross reproduction-rate. In fact, the product moment correlation coefficient for this series of data is $+0{\cdot}96 \pm 0{\cdot}02$. By fitting a straight line to the series of points it is possible to make an estimate of what we could expect the Yao gross reproduction-rate to be on the basis of a fertility ratio of 738. When this is done, the expected gross reproduction-rate falls between 2·99 and 2·47.[1] It is not suggested that this figure is a reliable estimate, since the mortality rate in the first five years of life must affect the association between the two measures. There are almost certainly differences in this respect between the relatively advanced countries, used to derive this estimate, and the people with whom this paper is concerned. This estimate is used here merely to check the estimate of the gross reproduction-rate arrived at by other means, basing such procedure on the assumption that differences in child mortality are not sufficient seriously to upset the correlation. 163

(c) *The Number of Children born to Mothers*

Table VIII shows the number of children born alive to women in the sample by age-groups. The Culwicks, in their survey of population in Ulanga District in 163 171

TABLE VIII. *Numbers of Live-born Children to Women of All Ages*

Age-groups	No.	0	No. of live-births 1	2	3	4	5	6	7	8	9	10+	Totals ♂	♀	T	Rate per woman ♂	♀	T
15–24	11	10	1	..	..	..	..	..	..	..	..	..	1	..	1	0·09	0·00	0·09
15–19	34	26	5	3	..	..	..	..	..	..	..	..	6	5	11	0·18	0·15	0·33
20–4	28	5	11	8	3	1	..	..	..	..	..	..	18	22	40	0·64	0·79	1·43
25–9	51	9	12	6	8	9	4	2	..	..	1	..	57	68	125	1·12	1·32	2·44
30–4	29	3	5	4	6	5	4	1	1	..	..	..	42	42	84	1·45	1·45	2·90
35–9	19	..	1	4	2	7	1	3	..	1	..	..	30	44	74	1·58	2·32	3·90
40–4	22	..	1	3	5	3	1	3	4	..	..	..	47	50	97	2·14	2·27	4·41
45–9	9	..	2	..	2	1	..	1	..	1	1	1*	24	22	46	2·67	2·45	5·12
50–4	8	..	1	1	..	1	1	1	1	..	1	1†	17	27	44	2·13	3·38	5·51
55–9	8	..	..	1	1	2	1	..	1	..	1	1‡	18	27	45	2·25	3·38	5·63
60–4	9	1	..	2	1	..	2	..	1	1	1	..	16	25	41	1·78	2·78	4·56
65–9	12	..	..	1	1	3	..	1	..	2	1	3‖	36	44	80	3·00	3·66	6·66
70	6	1	..	..	1	..	2	1	1	..	..	..	14	12	26	2·34	2·00	4·34
Total	246§	55	39	33	30	32	16	13	9	5	6	6	326	388	714	1·32	1·58	2·90

* Eleven live births. † Ten live births. ‡ Eleven live births. ‖ Two mothers with ten live births and one with twelve live births. § Excludes six women whose ages are unknown.

Tanganyika Territory, calculated the average number of live births per woman at various ages. These were as follows (Yao figures for comparison):

	Ulanga	*Yao*
Under 20 . .	0·92	0·27
20–30 . . .	1·99	2·07
30–50 . . .	2·49	3·82
Over 50 . .	3·13	3·50

This seems to support their conclusion that the birth-rate had suffered during the

[1] The equation for the regression line is $X = 0{\cdot}013 + 0{\cdot}0037\,Y$, where X is the G.R.R. and Y the fertility ratio. The standard error of the estimate is 0·13. A range of two standard errors was used in this estimate.

6: Mitchell E-5 (1946-1947) 1949 FT7 Yao FT7

163 last twenty to thirty years, and that it was then returning to normal since the
171 number of live births in the under-30 age-groups agree in the two surveys, but the figure for the over-30 age-groups is substantially lower for the Tanganyika material than for the Yao.

114 The Culwicks, Fortes, and Schapera have used the number of live females born
128 to women past child-bearing as an indicator of the gross reproduction-rate. It was
163 not possible to record whether the women in this sample had passed the menopause or not. From Table VIII we see that there is no upward trend in live births per woman over the age of 50. We may therefore take this age as representing the age at which child-bearing ceased. There were 43 women over the age of 50 and they had between them borne 135 live females. This is an average of 3·15 per female.
(171) This differs substantially from the figure that the Culwicks arrive at in their study, viz. 1·56.[1] It agrees, however, with the estimates made for the Tallensi (3·1)[2] and for the Tswana (2·54).[3]

There are, however, some serious objections to the use of this figure as a measure of the prevailing gross reproduction-rate. First, it does not take into account those mothers who did not survive the child-bearing period. If it is only the most fecund who die before menopause, we are, in fact, dealing with a sample which is unrepresentative, in that the least fecund are automatically selected. The opposite may also be true, of course, but the fact remains that such an estimate is based on an unrepresentative sample of mothers. Second, it represents the average fertility prevailing over the last fifty or sixty years. If there has been a large change in the fertility at some time during this period, this is included in the average and obscures the rate which prevails now. For example, the material presented by the Culwicks shows that the gross reproduction-rate must be higher than 1·56. The low figure in this case, they suggest, is caused by the famine which followed a rebellion in 1906.

(d) *A More Direct Estimate of Fertility*

128 In order to arrive at a figure which would reflect conditions prevailing more
163 recently, a series of tables was constructed, which showed (according to my census sheets) the number of children born in each year between 1917 and 1946, and the number of women in the different five-year age-groups for each of those years. Hence each woman who appeared in the first year (1917) was also counted in 1918. As each new year was considered some had turned 50 and were excluded, and others had turned 15 and were included. Therefore a gross reproduction-rate was calculated for each year from 1917 to 1946. These rates were averaged by adding together the number of women shown in each five-year age-group for five years and adding the number of children born during those five years, and by dividing to arrive at average specific fertility rates. The five-year averages were as follows:

1917–21	4·28	1932–6	2·23
1922–6	3·35	1937–41	3·22
1927–31	3·12	1942–6	2·83

There appears to have been a definite trend in this series, falling from the end of the

[1] The total of 3·15 children per woman was divided by 2 in order to arrive at the number of females per women.

[2] M. Fortes, op. cit., p. 108.

[3] I. Schapera, op. cit., p. 23.

6: Mitchell E-5 (1946-1947) 1949 FT7 Yao FT7

last war to a trough in 1932–6 and then beginning to rise again. However, with a sample as small as this one, and since we are relying on memory for most of this information, it would be unwise to accept this as significant. These tables have in turn been combined into three tables each covering one ten-year period from 1917 to 1946. These are shown in Table IX. 128 163

TABLE IX. *Average Gross Reproduction-rates in Ten-year Periods since 1917 to 1946*

Ages of women	1917–26			1927–36			1937–46		
	No. of women*	No. of live-born females	Annual average specific fertility rate	No. of women	No. of live-born females	Annual average specific fertility rate	No. of women	No. of live-born females	Annual average specific fertility rate
15–14	89	3	0·036	168	6	0·036	146	2	0·014
15–19	175	13	0·074	337	28	0·083	339	21	0·062
20–4	129	11	0·085	225	18	0·080	397	39	0·096
25–9	79	10	0·127	175	13	0·074	337	39	0·116
30–4	71	11	0·155	129	10	0·079	225	24	0·107
35–9	94	13	0·138	79	6	0·076	175	10	0·057
40–4	91	10	0·110	71	3	0·042	129	9	0·070
45–50†	39	3	0·077	94	5	0·053	79	6	0·076
Totals			0·822			0·523			0·598
G.R.R.		4·110			2·615			2·990	

* This does not mean that these totals represent the size of the sample. This is an average rate and some women have been counted more than once.

† These rates are higher than might be expected. There appears to be no special reason why these rates should be so high, and the explanation probably lies in the smallness of the sample.

The obvious deficiency in this set of data is that the women who died are not included, and since many more of the 1917–21 cohort (i.e. those women who were in the child-bearing ages in that period) have died than, say, for the 1937–41 period, the rates calculated for earlier periods become more and more unreliable. There seems [114]

TABLE X. *Average Gross Reproduction-rates over Ten-year Period 1937–46*

Age-groups	1937–41			1942–6			1937–46		
	Women	Girls	Rate	Women	Girls	Rate	Women	Girls	Rate
15–14	60	..	..	68	2	0·029	128	2	0·016
15–19	198·5	13	0·065	144	8	0·056	342·5	21	0·061
20–4	201	14	0·070	195	25	0·128	396	39	0·098
25–9	142	18	0·127	202	21	0·104	344	39	0·116
30–4	96	12	0·125	136·5	12	0·088	232·5	24	0·106
35–9	95	5	0·053	94	6	0·064	189	11	0·058
40–4	43	3	0·070	86·5	5	0·058	129·5	8	0·062
45–50	37	4	0·108	42	2	0·048	79	6	0·076
Totals			0·618			0·565			0·593
G.R.R.		3·090			2·825			2·965	

no way of circumventing this difficulty for the earlier periods, but some correction for this may be included in the 1937–46 rates. All those women who were in the child-bearing ages when they died between 1937 and 1946 were extracted and

6: Mitchell E-5 (1946-1947) 1949 FT7 Yao FT7

128 included in the material that was prepared for Table IX. In this way it was possible
163 to construct Table X which shows as close an approximation as we can get to the gross reproduction-rate from the material on hand.

Since the exact date of death was unknown (i.e. day and month) it was assumed that at death the women were at the mid-point of the age-group. Therefore the figure 198·5 in Table X represents, for example, say, 198 women who passed through one particular year and 1 woman who died in that year.

The revised rates for the two five-year periods 1937–41 and 1942–6 are not greatly different from those calculated without taking account of the women who died. The average gross reproduction-rate over the ten-year period 1937–46 falls within the limits of expected gross reproduction-rate as calculated from the fertility ratio (2·47 to 2·99; see p. 303), and is not widely different from the estimate derived from women who have passed child-bearing (3·15; see p. 304).

(e) General Conclusions about the Gross Reproduction-rate

163 In general we may observe that from the material on hand the gross reproduction-rate for this sample has always been high. This is confirmed since, first, the number of live-born females born to women over the age of 30 is high (3·15); second, the lowest rate calculated for the past is 2·23 for 1932–6, though not too much reliance should be placed on the validity of this; and third, the rate calculated for the last five years which, since memories of dead children would still be fresh, is probably quite accurate, is 2·83.

114 With a sample as small as the one used in this survey a certain amount of variability
163 is to be expected. Also since all ages are merely estimations based on the memory of informants, one can only expect approximations over fairly long periods of time. For this reason it is probably safer to use the five-year average 1942–6 as an indicator of the present gross reproduction-rate, or even the ten-year average 1937–46. In this case, we may estimate the present gross reproduction-rate at about 2·8 or 2·9.

4. The Net Reproduction-rate

128 Of course, no mortality statistics for the African population are available. Hence
165 it is necessary to construct a make-shift survival table in order to arrive at some estimate of the net reproduction-rate. This is set out in Table XI. In this table I have assumed that the mean age of each five-year group is 3 years older than the lowest age in that group, i.e. the mean age of the 35–9 age-group is 38. It would have been more consistent to take this mean to be 37·5, but since the ages at death are not accurately known there seemed little point in doing this.

The problem then becomes: what proportion of girls born to mothers of average age 28 years (for example), i.e. to the 25–9-year age-group, will themselves survive to be 28 years of age?

In order to arrive at this proportion all the girls born between 1934 and 1943 who were recorded on family census forms were abstracted, i.e. 151. Of these 16 died before reaching the age of 4, so that we can assume that 89 per cent. survived to the age of 4 and over. For the mortality of the children between 4 and 8, those born between 1929 and 1938 were considered. There were 112 of these, but 14 died before reaching the age of 4. Hence we consider only 98 (as recorded in column iii

6: Mitchell E-5 (1946-1947) 1949 FT7 Yao FT7

of Table XI) as surviving to the age of 4 and beyond. Of these, 2 died before they turned 8 (see column v) which indicates a survival of 98 per cent. for this period. It will be remembered that 89 per cent. of all girls born alive survived to be 4 years old, and now we know that 98 per cent. of these lived to be 8 years old. Hence, 128 165

TABLE XI. *Survival Table: Females*

Year of birth of females	*Age-groups through which females born in years in col. i have entered and passed (except if died)*	*No. of females entering age-groups*	*No. of females who died before passing out of age-group*	*No. of females who survived through age-group*	*Per cent. of females who survived age-groups*	*Survival-rate*	*Smoothed values*
i	ii	iii	iv	v	vi	vii	viii
1954–43	3 and under	131	16	135	89	89	92
1929–38	4 to 8	98	1	97	98	87	86
1924–33	9 „ 13	65	1	64	98	85	84
1919–28	14 „ 18	70	3	67	96	81	83
1914–23	19 „ 23	66	0	66	100	81	82
1909–18	24 „ 28	44	0	44	100	81	81
1904–13	29 „ 33	28	1	27	96	77	77
1899–1908	34 „ 38	15	1	14	93	71	71
1894–1903	39 „ 43	11	1	10	91	64	66
1889–98	44 „ 48	10	0	10	100	64	63

we can say that $89 \times 98 = 87$ per cent. of all children survive to be 8 years old (see column vii of Table XI). These points were then plotted and the curve smoothed by hand. Smoothed values for the mean ages, i.e. for 17·5, 22·5, &c., were then read off and are recorded in column viii of Table XI. These smoothed values represent the survival-rate over the last 15 years and may now be applied to the gross reproduction-rate for roughly the same period, i.e. for the period 1937–46 in Table IX. This is done in Table XII. 163 165 [128]

TABLE XII. *Net Reproduction-rate: Average 1937–46*

Age-group	*Specific fertility rates*	*Survival rates*	*Survival fertility rates*
i	ii	iii	iv
15–14	0·080	0·84	0·067
15–19	0·305	0·83	0·253
20–4	0·490	0·82	0·400
25–9	0·580	0·81	0·470
30–4	0·530	0·77	0·409
35–9	0·290	0·71	0·205
40–4	0·310	0·66	0·205
45–9	0·380	0·63	0·240
		Net reproduction-rate	2·249

The sum of column iv in Table XII (2·2) is the net reproduction-rate. This figure is admittedly high, and we may look for the error in the possibility that some females who died are not recorded so that the mortality rate is underestimated. However, there seems to be sufficient evidence to conclude that the replacement rate is high.

6: Mitchell E-5 (1946-1947) 1949 FT7 Yao FT7

This is partly confirmed by the fact that the increase in total population for parts of the Liwonde district, with which this survey was concerned, according to the official census, is about 2·69 per cent. per annum.[1] At this rate we could expect the population to double itself in about 26 years. A net reproduction-rate of 2 would mean that the population would double itself in one generation which we may take in this case to be about 25 years. Some of the increase shown in the census is no doubt due to immigration from Portuguese East Africa, but the high replacement rate suggested by this material tends to confirm the opinion of one Administrative official, who maintained that immigration has virtually ceased since 1931.

5. General Summary and Conclusion

From material collected in three groups of hamlets in Liwonde district of Southern Nyasaland it appears that the average gross reproduction-rate within the sample over the last ten years was about 2·9 while the net reproduction-rate was about 2·2. There is no reason to suppose that the fertility of this sample is vastly different from that in any other part of the district, since the hamlets visited were casually selected; nevertheless, the sample is not a random one (in the statistical sense) and it is unsafe to generalize from it.

The Nyasaland Administration has only recently introduced machinery for the registration of births and deaths.[2] Until, therefore, these statistics are collected there seems to be no alternative but to rely on estimates as uncertain as those made in this paper.

[1] The population of Kawinga, Liwonde, and Nyambi sections of what was formerly known as Liwonde district or Upper Shire District of Nyasaland, increased from 39,154 in 1926 to 64,840 in 1945. Extracted from the crude census returns in the D.C.'s office in Zomba.

[2] Actually the forms for this registration do not tabulate all the categories of information necessary for the calculation of the gross and net reproduction rates. Such omissions are mainly of the ages of the mothers and ages at death, and they have been excluded, no doubt, because it is assumed that this information is unobtainable. It is to be hoped, however, that when the system has become established, these categories will be introduced.

Résumé

MALÉDICTIONS DES NUER (see p. 288)

L'auteur cite de nombreux exemples des malédictions employées parmi les Nuer et indique l'importance comparative s'y attachant, suivant le degré de parenté entre la personne qui prononce la malédiction et celle à laquelle elle est destinée. La malédiction des morts est plus redoutée que celle des vivants, et l'on s'attend à ce qu'un homme qui emporte au tombeau le sentiment d'avoir subi une injustice fasse à son ennemi du mal affligeant plusieurs générations. Des malédictions prononcées n'affecteront que rarement le bétail puisque faire du mal au bétail nuit à toute la lignée et pas seulement à l'individu. Pour être efficaces, les malédictions n'ont pas besoin d'être exprimées en paroles — une imprécation silencieuse, ou même un sentiment de dépit, peuvent avoir la même force qu'une malédiction prononcée.

3: Stannus D-5 (ca. 1912) 1922 FT7 Yao FT7

and uncles as well. I am inclined to believe that the words primarily refer to a person's maternal and paternal relatives whose children bear the relationship of uncle to the person. A strange point, however, crops up, namely, that the paternal aunts are called *atati* (*atati wahongwe*) and their husbands *atati* again. 601

An elder brother is *akulu*, his younger brother *mpwalwe*, a sister *mlumbu*, *mlumbu wamandi* and *mlumbu wakulungwa*, younger and elder sister.

Disease. Apart from old age, the native recognises in all illness and death the hand of an enemy or the result of transgression of some custom: some one has made medicine against him, or he or some one else has broken a custom founded on superstition which is visited on his head. These ideas are so deeply rooted in the native mind that it is with difficulty any appropriate treatment will be received. They rely, rather, on some medicine-man to cure them by medicine more powerful than that made against them. Even an ordinary accident or an attack of pneumonia is accounted for in this way. 753 754 164

The names given in speaking of sicknesses are, of course, applied rather to symptoms, but in some cases where the symptom named is pathognomic of a disease, the word practically stands for the disease. The word used may imply the supposed cause or refer to a resemblance to some object, or again simply state the part affected; thus *chitumbo* (the belly) meaning stomach ache, *meso* (eyes), conjunctivitis, etc.

The following words most of which are found in the Reverend Dr. Hetherwick's *Yao Language*, give some idea of the Yao native's conception of disease. The sense which the above authority gives is not always quite the same as I would venture to give. I shall not enter into the question of the diseases as such but only in so far as they bear on customs, etc.

The word *chihuale* signifies any disease or illness; *chilopa* and *chipindupindu* refer to epidemic diseases; the former refers to a disease of fowls and dogs characterised by wheezing and hence is occasionally used for bronchitis in man. *Chipindupindu* refers to a series of deaths from a cause unknown to the natives. The word *chaola*, which Hetherwick gives as meaning a plague, rather means arrow poison, I think. 164 753 192

Chombote: a liver disease of fowls.

Chipapa: a congenital deformity of any kind (*kupapwa* = to be born with).

Chitusuma: a patch of white hair on the scalp of congenital origin.

Chisusani (a cousin): the word used for a birth-mark or freckle; bellical fistula is also included. Children examine each other to see how many "cousins" each has; anyone with none is made fun of.

Chindundumali (*kundumala* = a big lump): a hunchback.

Chiwuhula (*ku-wuhula* = to split): a "splitting" headache, or more commonly, medicine by means of which the possessor can inflict pain or death.

Ching'alang'ala: a localised pain in the head.

Chinyungwungwu: giddiness.

3: Stannus D-5 (ca. 1912) 1922 FT7 Yao FT7

164 753 192

Chibuli: deaf and dumb (Chin); the word is used in slang to mean impotence.
Chiwiuku: an old word meaning high fever.
Chilundulundu: "*wabengwe wawili chilundulundu,*" the woman died in confinement without giving birth (unopened). The sense of dumbness and constipation are secondary.
Kuhikha: constipation.
Malundungulí: colic; *Mangenge*, rumblings in the bowels, borborygmi.
Mandindili: "pins and needles."
Chiluza: sore and swollen gums, pyorrhoea; has been translated scurvy.
Chingungulukuta: hardened skin, like a corn on the hand.
Njeseka: without eye-lashes, as result of disease.
Ndandagazi, Lungumbini: indistinctness of vision (Hetherwick).
Lossoo: watering of the nose; nasal catarrh.
Mamboko: the secretion at the corners of the eyes in the morning, also the purulent secretion of conjunctivitis (Hetherwick translates "watering of the eyes").
Namila: nasal mucus.
Chimbondagolo: crusts from the nasal passages (Hetherwick translates merely "nasal mucus").
Likoomola: cough.
Chisungusya: after-pains of labor.
Ngwikwi: hiccough.
Ng'anang'ana: nystagmus, from a verb meaning "to look from side to side aimlessly."
Iwenga: any skin eruption supposed to be due to eating various subtaneous, chiefly meat.
Ku-lilimuka: to have a rash on the body of the nature of urticaria.
Ngolokolo: the name of a condition in which the place where a man passes water becomes whitened; hence it refers to cystitis, lithuria, etc.
Chikonokono (*likonokono* = a snail): the white on the ground resembling a snail track left by a man with *Ngolokolo.*
Ndwwi or *Mhili:* smallpox.
Ndongola or *Kasabola:* chicken pox; this term may also include other diseases with similar rash, i.e. modified smallpox and pemphigus.
Chitembo (*ndembo* = an elephant): elephantiasis.
Matona: leprosy.
Mapenepene: yaws (*chimatuli*, given by Hetherwick as "rodent ulcer," is a Chinyanja word for yaws).
Chindoko: (Swahili) syphilis.
Chisonono: (Swahili) gonorrhoea.
Lulachilachi: whooping-cough.
Chikuku: measles.

3: Stannus D-5 (ca. 1912) 1922 FT7 Yao FT7

164
753
192

Mbumu: asthma.
Chiukula (*ku-ukula* = to scrape out): diarrhoea, dysentery.
Chipungu (*nhungu* = warthog): swelling at angles of jaws, mumps.
Lisudilu: nasal or bronchial catarrh.
Masuku: insanity; *mangumangu*, delirium of fever (Hetherwick translates as periodic madness).
Mbulu: asthma.
Litolomiso: goitre (*Ndotilo: pomum adami*).
Nalusumbu: leucoderma of hands and feet.
Chiwungwupulo: a pustule.
Chiwumbululu: a boil.
Chikungu (*nyungu* = the spotted guinea-fowl): ring-worm of face.
Limasu: any mark on the skin, e.g. birthmark, pigmented spot, ringworm, scar.
Suwusu: a wart.
Ndundi: a burn of the skin.
Lipulusu: a keloid scar (Hetherwick gives "boil").
Lungu: a rash after shaving.
Litulu: a blister.
Chipulusu: a wheal after a blow or an insect bite.
Chiipu: oedema of a limb.
Chipuyu: whitlow.
Lipulu: an abscess; sores, pus.
Lilimbupu: an abscess; (*ku-umba:* to swell).
Liusungu: a sore or ulcer.
Mkusungusungu: a chronic ulcer.
Lisiuchilu (*ku-syuka* = to come to life again): an ulcer which heals and then breaks out again.
Lilimbachipu: secondary enlarged glands in groin or elsewhere from a sore on the foot, etc.
Ndusi: Any freely movable lump under the skin, e.g. sebaceous cyst, patella, ganglion, etc.
Chilumi (*ku-luma* = to bite): rheumatism.
Upesu: itch, scabies.
Ilundu ulususu: thrush.
Lusungu: diarrhoea in infants with green stools.
Lulususu: passage of blood in urine; Urinary Bilharziasis.
Ng'alu: ulcer or leucoma of cornea.
Ching'ang'a: rabies in dogs.
Lisichimi: round-worm of man.

3: Stanmus D-5 (ca. 1912) 1922 FT7 Yao FT7

164 *Mangangalani:* round-worm of dogs or found in the ground.
753 *Wakanyue wajuma:* a barren woman (lit. dry).
192 *Chiwanpula:* sterility in the male.
Chiyumpula or pofo: an impotent man or *Mundu jua ipupo:* a useless man!
Mpuli: impotent.
Mchaw (*ku-chaw* = to cut off): a "cut man"; a man soon after he has been castrated.
Mtanga: a eunuch after he has become fat.
Nambundiwa (*nalimumu* Chin.): the word is derived from *kubunda*, to micturate. Natives say that when disturbed, the insect of this name which is a lonstid, *Eupolisepis durandi*, makes water which falling on the skin of the passer-by causes ulceration. I have seen a variety of cases of extensive ulceration due to syphilis, etc., assigned to the effects of this insect; I have, however, shown that it does secrete a corroding fluid from pores at the sides of the body which dropped on to the skin will dissolve the superficial layers of the epidermis and should such abrasions become infected, ulceration may, of course, result.
Utundu: tremor, similar to the movements of one of the wanga.
Mzinjeja: tremor of old age, *paralysis agitans.*

164 The preceding short list of words will give some idea of the richness of the language in
192 some directions and also its limitations. There now follows an account of diseases which are
753 based on superstition, generally connected with the idea of uncleanness or the transgression
680 of some rule of life. Whatever the symptoms, if there has been a transgression, the disease is labelled with the name of the disease supposed to follow the act. Similar diseases are to be remarked among the other tribes in the country; some of those relating to the Anyanja I have already mentioned,[1] and the following may be read as an amplification of the remarks previously made.

Chinpwa (*Kenpwa* Chin.) from *kunpa*, to defecate: At the birth of a child, if the contents of the bowel (meconium) are passed before the body is born (as often happens in breech presentations), the child is said to be "born with disease." One of the women attending the confinement will always go out and inform the husband of what has happened, saying, "*Apili 'chenwa*," (it is born well) or "*Apili ni chilunda*," (it is born with disease). This only refers to the passage of meconium and not to any antenatal disease.

When this significant event has happened, the husband may not occupy the same sleeping mat as his wife and have intercourse with her until the child of its own accord crawls from the mother's sleeping mat to that of her husband on the other side of the hut; *Ku-pitiqa mwanache ku mapwa* (*Ku-pitiza mwana ku mpwa*, Chin.) = "to go the child to the mat." Should the husband disregard this custom, he will sicken with *Chinpwa*. The symptoms commonly ascribed to *Chinpwa* are pain in the loins and in the hypogastrium.

[1] 'Notes on some tribes of British Central Africa,' op. cit.

3:Stannus D-5 (ca. 1912) 1922 FT7 Yao FT7

This has led to the word being translated as Bright's disease (Hetherwick). No symptoms referable to the pudenda are included under this disease. *Mwere* (Chin. *Kupunda*): hydrocele; said to be another sequela. A woman soiled by the movement of her infant after birth is not considered unclean and intercourse will have no ill result to the husband. Sometimes in the event of *Apali ni chikuti*, recourse is had to the practice of intercourse between the woman and some other man. She is thus rendered "clean" and the man who is not her husband will not sicken. Such a man is called *Litowa* (see Widowhood).

Lemwe: a disease similar to *Chinguru*, which inflicts a man having coitus with his wife who has not been cleansed after abortion.

Kwimenda: a practice indulged in if a new-born child falls ill; the word refers to the "hardening" of pots when they are being made and the same idea is applied to the child. If the new-born child gets fever, the illness is ascribed to the *carunculæ myrtiformes* about the vulva of the mother. These are cut off by an old medicine-woman and the blood allowed to drop into a mortar; water and some leaves are added and pounded together, and the mother attired only in a cloth reaching to the loins, washes her breasts with the liquid while the baby is supported on one thigh; the child is then given the breast and the mother, turning her back on the mortar, pushes it over backwards with her buttocks.

Ya ujale (from ualé; Chin., *das wahre*): If a woman who, after the death of a child, has not been cleansed by medicine, adds salt to her husband's food, he eating it will sicken.

Tsempo (a Chinyanja word): If a man or a woman commits adultery and any member of the family falls ill, the natives say the illness is due to the unlawful act; the sinner is said "to have gone in front of the other"; *Isempunda* (*ungumbwa*, Chin.), "he has gone in front of," from *ku-penda* and *ku-pembwa*, to go in front of, or *ku-ungupka* (Chin.), to go slyly in front of. Hence the word *tsempo* which also is used loosely for *das wahre*. If a child who according to custom has gone to stay with the grandmother, returns to the parents' house and the parents continue to have sexual intercourse, the child may sicken; it is said that the house is "hot" for the child and its disease may be called *tsempo*. Or if a child which has been weaned is again given the breast after the mother has resumed cohabitation with her husband, it may sicken with *tsempo*. And the husband is called *Isempunda*.

A child which is suckled after menstruation is reestablished, is not affected by any untoward symptoms.

In the event of a woman dying in childbirth, if it so happens the husband has committed adultery, he is held responsible for the death and her relatives claim very heavy compensation.

Ku-cimwilwa, to be met with (*ku-kumwilwa*, Chin.): If the act of coitus causes the onset of menstruation and the husband cannot draw back in time to prevent himself being contaminated, he will sicken, and he is said "to have met with (it)" when referring to his illness. In this disease, the penis is said to withdraw into the bladder. Sent from the roof

3:Stanzas D-8 (ca. 1912) 1922 FT7 Tao FT7

164
P2
753
G8

of the hut, *ahwijidu*, and the red part of the flower of the banana, doubtless on account of its shape, are used as medicine for this disease.

Kwinkwanyana or *Ndulu*: If a man dies and his relatives eat of the food-stuffs left by him, such as corn from his grain-store, before they have been cleansed by medicine, they will sicken with ndulu, the symptoms being anaemia and wasting. The word *kwinkwanyana* is also used for sickness due to partaking of food cooked by an unfaithful wife.

Chiputo is a word used by both Tao and Anyanja to denote a disease which a man contracts from adulterous intercourse. Scott[1] derives the word from *ku-puta*, to stick to; the woman is so influenced by medicine made by her husband that should any man have adulterous intercourse with her, the disease will "stick" to him, while it will not affect the woman herself nor her own husband. Both the disease and the medicine made to cause the disease are known as Chiputo. Secondarily, the word has come to be used for any disease which may be gained by sexual intercourse and is sometimes used as a general term for venereal disease.

Chiputo cha chipuda (*chipuda*, a knife): A man who is going away from home obtains medicine and doctors his knife with it. As he leaves his house to go on his journey, he pretends just to remember his knife and calls for it. His wife brings it to him and it is put into its sheath; he then goes out and sticks it in the grass of the roof of the house. The medicine is made from the tail of a dog, an animal in which coitus is prolonged and the two animals cannot separate. Should the wife commit adultery, it is supposed that just as the knife was unsheathed and doctored with dog medicine, so the adulterous pair will remain fixed in coitu and be found out. This may be called *chiputo cha kutapa* (*kutapa* = to set a trap).

The Anyanja make medicine with the same idea, *chiputo cha kuchera* (*ku-chera*, to set a trap, Chin.); medicine is put round the house and any man crossing the medicine and committing adultery with the wife will be trapped. In all cases, the man will become ill.

Chiputo cha wimi, *wimi*, blood (*mwazi*, Chin.); disease caused by intercourse with a menstruating woman. Blood is passed in the urine.

Chiputo cha nsuwa, *nsuwa*, pus (*mafinga*, Chin.): practically means gonorrhoea.

Chiputo cha timoji, *timoji*, cotton (*ponja*, Chin.): the discharge from the urethra resembles a thread of cotton; it is supposed that this thread can be pulled out endlessly.

Chiputo cha ushuchu, *ushuchu*, the white-ants (*chiwuu*, Chin.): so called when a man passes whitish-yellow debris in the urine. It is supposed that when he has finished passing water, white ants rush up the penis and enter the bladder, thus causing the pain which characterises this affection. The origin of the idea lies in the fact that if one sprinkles water or urine on the ground near white-ant burrows, the ants will come to the surface of the ground in numbers and make a rustling sound.

[825]

[1] D. C. Scott, A cyclopædic dictionary of the Mang'anja language, op. cit.

Other hypothetical diseases which are caused by disbelief to nature are mentioned under various other headings. *Eenye*: a disease generally characterized by abscesses of the legs but in some cases by pains in the back, or loosely used for a variety of symptoms, is said to be caused by the entry into the body of a worm which lives in water-grass. This worm which I have had identified is a gordius worm and not known to be parasitic in man. *Lomi*: When a man kills another in battle, he will sit upon the belly of his victim; otherwise he believes he will sicken with heat and his own belly will swell up like that of the corpse when putrefaction sets in. He is supposed also to hunger after more killing and blood. *Lilunga* is the name of a supposed disease which kills off one child after another in a family when they are about six months old. Congenital syphilis naturally suggests itself but I have never been able to verify this idea. *Lilunga lya bolele*: a supposed disease which causes the death of the first child when the second is born, the second when the third is born and so on, whatever the intervals between the births. Each child is said to push (bo-tele) the previous one out of this world. Under these circumstances the disease is ascribed to something wrong with the mother or father and they are examined by a medicine-woman or medicine-man, and any carcundas or an external pile found will be cut away.

If a snake inflicts two bites, the case will prove fatal. If a crocodile emits a grunting sound when seizing its victim, though he escape he will certainly die.

Treatment of diseases. Of surgical treatment there is very little to be noted. Nothing in the way of operation is performed with the exception of circumcision (see *Legends*).

An abscess is allowed to burst, the smallest tumor is left untouched, but accessory digits which are not rare, attached only by a fine pedicle, are snipped off.

The natives cannot extract teeth. They are incapable of rendering any assistance in cases of difficult labor. Dislocations are not recognized as such, but fractures are treated by the application of wooden sticks placed at intervals round the circumference of the limb parallel to it and held in position by twisted pieces of bark string (Pl. XXII, fig. 3). The principle of the tourniquet appears to be unknown.

The only instruments used consist of a small knife for incision, a cupping-horn, and a primitive form of funnel for administering enemata (Pl. XXII, figs. 1, 2, 4). The knife has a triangular blade with a stem which is commonly twisted at one of the corners. The knife is used for wet-cupping, tattooing, and circumcision (Pl. XXII, fig. 3). The cupping-horn is a small horn of a calf. The open is pierced and after application to the part, suction is made with the mouth and then the hole sealed by working a piece of beeswax over it with the tongue. Six small incisions are made in the skin for the withdrawal of the blood. The cupping-horn is called *ebeni* (Isiwuta, Chin.). Cupping is used for headache and for pain in the chest and back. The enema funnel, *ebigelge* (*ulimbi*, Chin.) is made from the neck of a gourd to which is attached a hollow stem for introduction into the anus. Half a pint of an infusion of enemata is injected for constipation associated with pain.

and sitting within the circle, he blew his whistle which was audible to the *mwani* man who was then induced to come out of his house. When he had reached the grave, the water was sprinkled over him by the *fundutula* with the collet staff from the disk on the grave, or he was struck with the gnu's tail; in either case, he fell to the ground senseless. He was then ready to be dealt with. The *ubutula* sticks, small bamboos filled with crocodile poison, were pushed up the anus and broken off to liberate the poison. Sticks might also be inserted behind the ear or in various other spots. The *mwani* was then beaten to wake him up; he ran off to his own village and there, a little later, he sickened and died, telling no one the cause. After death, the *ambi* when preparing the corpse of the hitherto unsuspected *mwani*, might find the end of the stick projecting from the anus or see the puncture elsewhere with the medicine adhering to them, and the man was revealed in his true colors.

754
675
791

At Mwiriche's village, there was a man called Lisuga who professed to be able to extract the poison injected by the *fundutula* by causing his patients to undergo a vapor bath and to drink certain decoctions. This man would never reveal the name of anyone who came to him for treatment but would brag that " trade was brisk." The symptoms of the mortal malady caused by the *ubutula* are said to be intestinal obstruction with tremendous distention of the abdomen (peritonitis).

[184]

Of this same village, a story is told which, if not true, at all events illustrates the sort of thing that is believed. As has been mentioned above, whenever the *fundutula* blows his little horn, any *mwani* will hear it and thinking it is one of their band calling, will go to meet him. A woman of this village told how she and her husband were sitting over the fire while the evening meal was cooking, when he suddenly jumped up and said he must go outside for a bit. She remonstrated and asked him to wait for his food, but he hurried off. Later he returned, complaining of feeling very ill; his belly swelled up and he died soon after. It was said that this man was very friendly with a woman named Alidi and that when he went out into the bush, he was heard calling in a low voice, "Is that you, Alidi?" When his body was examined, two punctures were found on the left side of the chest. It was supposed that it was Alidi he expected to meet and with her enjoy a cannibalistic repast, whereas it was a *fundutula* who had called and killed him.

This brief outline of a case of sickness, suspicion of witchcraft, death, and the consultation with the master-of-lots, the witch-finder, ordeal poison, death, and the catching of the manifest witch, has been given as a more or less connective story in order that it may be more easily understood. Some further details concerning the lot-master, witchcraft, etc., must be added.

Lot-casting. Medicine men who cast lots were at one time fairly plentiful and were consulted on many matters, often of small importance from a European point of view. Chief of all were questions of witchcraft. The modus operandi varied in different cases. In cases and other important matters, the medicine man always used the *ukuonga* (divining le-

787

3:Shanna D-6 (ca. 1912) 1912 FT7 Tan FT7

845 one of Makanya's sons died, after giving birth to quintuplets, some thirty years ago. Deformed children are buried alive. A large number of children is always hoped for and where polygamy is practised, some families are of considerable size, although the mortality
[165] among young children is very high. It is, of course, very difficult to state the child-bearing period among natives. It does not start as early as is commonly supposed, and I think the menopause is found within about the same limits as among Europeans.

Death. Natives of Nyasaland live to a good old age. That such is not the case I have
764 found to be one of the many fallacious beliefs concerning natives which should be relegated
165 to the realm of exploded theories, as I have pointed out elsewhere.[1]

Death in old age is recognized as a natural event but apart from this, all sickness and
[204] death were formerly and are still to a large extent looked upon as the result of the machinations of some person; an idea which forms the outstanding feature in their belief in witchcraft, sorcery.[2]

763 Here I shall mention the ordinary customs in the case of death. During the last hours of a mortal illness, a man is tended by his wife or wives; the head wife sits constantly supporting his head on her lap or against her breast. A woman is similarly tended by her mother, sisters, and friends. As unconsciousness sets in and the extremities become cold, they say, "His spirit has gone and only the heart remains alive."

The native does not like the idea of lingering on and a man on his death-bed will say to his sons, "Now watch me that I die quickly." He may take medicine to help him over that time or he may give his sons instructions as to what to do. Should a man linger unconscious for a long time, friends will ask his sons, "Did he give you any instructions?" If he has done so, the sons will then carry them out. This perhaps consists of bathing themselves in medicines left by their father, while they stand on the roof of his house. Sometimes, the natives say of a lingering man, "Ah, perhaps he has eaten of a tortoise's heart!"
[205] Knowing the phenomenon of the tortoise's heart and believing that by partaking of it, the same property can be conferred on the heart of a man.

764 When death is manifest, the body is covered with a cloth by a brother, a son, or some
[97] other person in attendance. The eyes are closed, the mouth shut, and at the present time, the body straightened out. This, however, is a recent practice copied from the Anyanja, Europeans, and Mohammedans.

764 News of the death must be sent to the chief, and a messenger goes to his village where
203 the chief and his people sit in the village open space. He carries a fowl in his hand. The presence of a single fowl always denotes bad tidings. One of the chief's sons, seeing the stranger approach with the single fowl, will jump up and take the bird. He is joined by the others and they go away to the cross-roads where they kill the fowl, pluck it, cook it and eat it. In the meantime, the messenger delivers his news to the chief who will produce from his house about eight yards of white calico; if the deceased has been a much respected

[1] Hugh S. Stannus, "The Wa-nyas of nyasa", (Lancet, April 13, 1912, p. 1000). [2] This idea, p. 340.

3:Stanton D-5 (ca. 1912) 1922 F77 Yao F77

539

Meaning "Though you are prosperous at the moment, do not make a show; all these things may pass away quickly," or *Kwishila ulwanjenpalile pasu!* "One should not rejoice openly."

36. *Wabile mwendo pa ulwa!*
They have eaten mwendo fruit on the head!

The intimate of a household who betrays the friendship of the husband by culpable intimacy with his wife is said "to eat mwendo fruit with the wife over the head of the husband." (Cf. French, *faire cocu.*)

38. *Mpendo ne kwishila nangakuwa kwishila n'ituma!*
The arrow he is watching, it does not take long to reach the eye!

A man who looks on and does not take steps to stop an ill at the beginning will suffer heavily in the end.

39. *Mwangamwinga lipanga!*
You kept me holding a stone!

You are late in your appointment; you have kept me waiting.

41. *Likale pilikwanda ndanji (or ndindimb) likalikile!*
The jackal when he swallows ndanji fruit is confident; (i.e. a jackal knows he can void the seeds of this fruit).

Likalikile has the sense of when jumping over a stream, the jumper is sure of landing on the opposite bank. The expression used of a man means that he feels pretty sure to get through with what he is doing. (Note: Some in contradistinction to jackals are said to eat mwendo but always to expel the seeds from the mouth, as the seeds are sharp-pointed and very irritating. I have myself seen a man die from perforation of the bowel by these seeds.) 165

42. *(Ahwete) ngindu ngandu wakilinji!*
(He has) mourning mourning of the bat!

Reference is made here to the habits of the bat which often makes a meal of figs and then flying to other trees, leaves its droppings under them also so that one might take them to be fig trees, too. The saying refers to a man who manages to involve a lot of others in his own trouble.

43. *Mapanie akalupa ngal!*
The mouth-mongoose they (people) admire (the) footprints!

The mapanie is a small rodent whose footprints may be seen all over the gardens in the morning, but seldom the animal itself. The meaning of the saying is, "If you are going to steal, it does not matter if you leave your footprints, but do not hang about and get caught!"

44. *Ndende akwaw ganakulaka matanda!*
Mr I-Must-Go-Well they on him hanged the mirrors!

6: Mitchell E-5 (1946-1947) 1949 FT7 Yao FT7

128 included in the material that was prepared for Table IX. In this way it was possible
163 to construct Table X which shows as close an approximation as we can get to the gross reproduction-rate from the material on hand.

Since the exact date of death was unknown (i.e. day and month) it was assumed that at death the women were at the *mid-point* of the age-group. Therefore the figure 158·5 in Table X represents, for example, 157, 158 women who passed through one particular year and 1 woman who died in that year.

The revised rates for the two five-year periods 1937–41 and 1942–6 are not greatly different from those calculated without taking account of the women who died. The average gross reproduction-rate over the ten-year period 1937–46 falls within the limits of expected gross reproduction-rate as calculated from the fertility ratio (2·47 to 2·99; see p. 303), and is not widely different from the estimate derived from women who have passed child-bearing (3·15; see p. 304).

(i) General Conclusions about the Gross Reproduction-rate

163 In general we may observe that from the material on hand the gross reproduction-rate for this sample has always been high. This is confirmed since, first, the number of live-born females born to women over the age of 30 is high (3·15); second, the lowest rate calculated for the past is 2·23 for 1932–6, though not too much reliance should be placed on the validity of this; and third, the rate calculated for the last five years which, since memories of dead children would still be fresh, is probably quite accurate, is 2·83.

114 With a sample as small as the one used in this survey a certain amount of variability
163 is to be expected. Also since all ages are merely estimations based on the memory of informants, one can only expect approximations over fairly long periods of time. For this reason it is probably safer to use the *five-year average* 1942–6 as an indicator of the present gross reproduction-rate, or even the ten-year average 1937–46. In this case, we may estimate the present gross reproduction-rate at about 2·8 or 2·9.

4. The Net Reproduction-rate

128 Of course, no mortality statistics for the African population are available. Hence
165 it is necessary to construct a make-shift survival table in order to arrive at some estimate of the net reproduction-rate. This is set out in Table XI. In this table I have assumed that the mean age of each five-year group is 3 years older than the lowest age in that group, i.e. the mean age of the 35–9 age-group is 38. It would have been more consistent to take this mean to be 37·5, but since the ages at death are not accurately known there seemed little point in doing this.

The problem then becomes: what proportion of girls born to mothers of average age 28 years (for example), i.e. to the 25–9-year age-group, will themselves survive to be 28 years of age?

In order to arrive at this proportion all the girls born between 1934 and 1943 who were recorded on family census forms were abstracted, i.e. 151. Of these 16 died before reaching the age of 4, so that we can assume that 89 per cent. survived to the age of 4 and over. For the mortality of the children between 4 and 8, those born between 1929 and 1938 were considered. There were 111 of these, but 14 died before reaching the age of 4. Hence we consider only 98 (as recorded in column iii

6: Mitchell E-5 (1946-1947) 1949 FT7 Yao FT7

of Table XI) as surviving to the age of 4 and beyond. Of these, 1 died before they turned 8 (see column v) which indicates a survival of 98 per cent. for this period. It will be remembered that 89 per cent. of all girls born alive survived to be 4 years old, and now we know that 98 per cent. of these lived to be 8 years old. Hence,

TABLE XI. *Survival Table: Females*

Year of birth of females	*Age-groups through which females born in years in col. i have entered and passed (except if died)*	*No. of females entering age-groups*	*No. of females who died before passing out of age-group*	*No. of females who survived through age-group*	*Per cent. of females who survived age-groups*	*Survival-rate*	*Smoothed values*
i	ii	iii	iv	v	vi	vii	viii
1934-43	3 and under	131	16	133	89	89	92
1929-38	4 to 8	98	1	97	98	87	86
1924-33	9 – 13	65	1	64	98	85	84
1919-28	14 – 18	70	3	67	96	81	83
1914-23	19 – 23	66	0	66	100	81	82
1909-18	24 – 28	44	0	44	100	81	81
1904-13	29 – 33	28	1	27	96	77	77
1899-1908	34 – 38	15	1	14	93	71	71
1894-1903	39 – 43	11	1	10	91	64	66
1889-98	44 – 48	10	0	10	100	64	63

we can say that 89×98 = 87 per cent. of all children survive to be 8 years old (see column vii of Table XI). These points were then plotted and the curve smoothed by hand. Smoothed values for the mean ages, i.e. for 17·5, 22·5, &c., were then read off and are recorded in column viii of Table XI. These smoothed values represent the survival-rate over the last 13 years and may now be applied to the gross reproduction-rate for roughly the same period, i.e. for the period 1937–46 in Table IX. This is done in Table XII.

TABLE XII. *Net Reproduction-rate: Average 1937–46*

Age-group	*Specific fertility rates*	*Survival rates*	*Survival fertility rates*
i	ii	iii	iv
15–19	0·080	0·84	0·067
20–24	0·305	0·83	0·253
25–29	0·490	0·82	0·400
30–34	0·580	0·81	0·470
35–39	0·530	0·77	0·409
40–44	0·290	0·71	0·205
45–49	0·320	0·66	0·210
		Net reproduction-rate	2·149

The sum of column iv in Table XII (2·2) is the net reproduction-rate. This figure is admittedly high, and we may look for the error in the possibility that some females who died are not recorded so that the mortality rate is underestimated. However, there seems to be sufficient evidence to conclude that the replacement rate is high.

6: Mitchell E-5 (1946-1947) 1949 FT7 Yao FT7

This is partly confirmed by the fact that the increase in total population for parts of the Liwonde district, with which this survey was concerned, according to the official census, is about 2·69 per cent. per annum.[1] At this rate we could expect the population to double itself in about 26 years. A net reproduction-rate of 2 would mean that the population would double itself in one generation which we may take in this case to be about 25 years. Some of the increase shown in the census is no doubt due to immigration from Portuguese East Africa, but the high replacement rate suggested by this material tends to confirm the opinion of one Administrative official, who maintained that immigration has virtually ceased since 1931.

5. General Summary and Conclusion

From material collected in three groups of hamlets in Liwonde district of Southern Nyasaland it appears that the average gross reproduction-rate within the sample over the last ten years was about 2·9 while the net reproduction-rate was about 2·2. There is no reason to suppose that the fertility of this sample is vastly different from that in any other part of the district, since the hamlets visited were casually selected; nevertheless, the sample is not a random one (in the statistical sense) and it is unsafe to generalize from it.

The Nyasaland Administration has only recently introduced machinery for the registration of births and deaths.[2] Until, therefore, these statistics are collected there seems to be no alternative but to rely on estimates as uncertain as those made in this paper.

[1] The population of Kawinga, Liwonde, and Nyambi sections of what was formerly known as Liwonde district or Upper Shire District of Nyasaland, increased from 39,154 in 1926 to 64,840 in 1945. Extracted from the crude census returns in the D.C.'s office in Zomba.

[2] Actually the forms for this registration do not include all the categories of information necessary for the calculation of the gross and net reproduction rates. Such omissions are mainly of the ages of the mothers and ages at death, and they have been excluded, no doubt, because it is assumed that this information is unobtainable. It is to be hoped, however, that when the system has become established, these categories will be introduced.

Résumé

MALÉDICTIONS DES NUER (see p. 288)

L'auteur cite de nombreux exemples des malédictions employées parmi les Nuer et indique l'importance comparative s'y attachant, suivant le degré de parenté entre la personne qui prononce la malédiction et celle à laquelle elle est destinée. La malédiction des morts est plus redoutée que celle des vivants, et l'on s'attend à ce qu'un homme qui emporte au tombeau le sentiment d'avoir subi une injustice fasse à son ennemi du mal affligeant plusieurs générations. Des malédictions prononcées n'affecteront que rarement le bétail puisque faire du mal au bétail nuit à toute la lignée et pas seulement à l'individu. Pour être efficaces, les malédictions n'ont pas besoin d'être exprimées en paroles — une imprécation silencieuse, ou même un sentiment de dépit, peuvent avoir la même force qu'une malédiction prononcée.

2: Mitchell E-5 (1946-1949) 1956 FT7 Yao FT7

643 him about the laws it intends to introduce which affect his people. The Administration transmits new Ordinances and Regulations to the chief and he must then relay them to the village headmen. When it advises the chief of a new law it thereby advises the people of his chiefdom.

The Origin of Villages in Modern Chiefdoms

195 621 We have thus far been looking at the chiefdom as an organization of villages united by their common interests in and association with one chief. But the villages that compose the chiefdom are not all equally closely integrated into the political structure. This is most clearly seen against the background of how the modern chiefdoms came into being.

175 621 563 By the time that the 1912 Ordinance was introduced the social composition of the chiefdoms had undergone some change from what it was before the White conquest. Before the White conquest the Yao chiefs had overcome the indigenous inhabitants of Southern Nyasaland. Some of these had been allowed to remain in the area as subjects. Others were enslaved. There were some Nguru, Nyanja and Mpotola village headmen who had come to seek the protection of the Yao chiefs.

175 621 166 During the conquest, the territory was thrown into confusion, and villages fled in abandon from their own into neighbouring chiefdoms both in Southern Nyasaland and Mozambique. When the Administration allowed the chiefs to return, most of the important village headmen and their followers returned with them. Kawinga, for example, was allowed to return, not to Mount Chikala but to the area immediately to the north of it. He brought back with him most of his important headmen who had fled with him to the country of the Mpotola chief Nkanyela, in Mozambique. Jalasi was allowed to return from Portuguese Territory in 1906,[1] not to his mountain fortress Mangoche, but to a smaller hill Sakalwe some miles to the east. He gathered round him a few of his important headmen.

When hostilities ceased, there was a certain amount of internal readjustment. Some villages which had fled to other chiefdoms in the Protectorate started to come back while others stayed behind. To-day there are villages here and there which had left their chiefdoms in the confusion and had then joined their present

[1] District Book, Fort Johnston.

2: Mitchell E-5 (1946-1949) 1956 FT7 Yao FT7

chiefs. Mpumbe's village, which in 1947 was about 2½ miles from Kawinga's court village Nanyumbu, was originally one of Jalasi's adherents. Mpumbe fled with many others when the British attacked Mangoche in 1896. He went to the place where Lake Amaramba spills into the Lujenda River in Portuguese East Africa. When things seemed more peaceful, Mpumbe did not return to Jalasi's area, but preferred to seek his son Ngongondo, who had fled with a section of the village to Kawinga's area. He found Ngongondo at approximately the present site of the village, and settled with him. Ngongondo later moved eastwards to his present home in the Liwonde area. Both village headmen have achieved a certain amount of prestige in their new chiefdoms. Mpumbe was once a court assessor of Kawinga, and now holds girls' initiation rights. They have lost all touch with their former chief and are most unlikely to return to him.

A considerable number of Kawinga's villages moved into Mposa's and Chamba's areas, when they returned to the Protectorate. Their descendants to-day say that they did so because the soil was better in those areas than in Kawinga's.

Shortly after the British expedition, i.e. between 1896 and 1900, the Portuguese Government launched a punitive campaign against the Africans along the Portuguese-Nyasaland boundary. Many thousands of refugees came pouring into the Protectorate. Most of these were Mpotola and Nguru. The great majority settled where they crossed the boundary, i.e. round Chiuta, and Ngokwe chiefdom arose from some of them. After the Portuguese campaigns ended many other migrants came into the area. All those I questioned gave Portuguese ill-treatment as the reason for their coming across.

During the first decade of the century the movement, as in the initial invasion, was predominantly south-westwards—from Lake Chiuta towards the Shire River and Highlands. Now, however, the movement is gradual. The first movement of a group may bring it just within the boundary. Then the next movement may take it to the south and west deeper into Nyasaland. Some of my village case histories show this. Table III sets out some movements within Kawinga-Liwonde area (except Chiwalo).[1] I asked about the place of origin of all the villages

[1] I use Kawinga-Liwonde area to include the chiefdoms Kawinga, Liwonde, Mposa, Chamba, Ngokwe, Chikweo and Chiwalo.

2: Mitchell E-5 (1946-1949) 1956 FT7 Yao FT7

TABLE III

MOVEMENT OF VILLAGES WITHIN KAWINGA-LIWONDE AREA

621
175
166

Losers: \ *Gainers:*	Ngokwe	Chikweo	Kawinga	Liwonde	Mposa	Chamba	Totals
Ngokwe .	—	—	7	2	—	—	9
Chikweo .	—	—	2	—	1	—	3
Kawinga .	—	—	—	27	1	20	48
Liwonde .	—	—	—	—	—	4	4
Mposa .	—	—	—	2	—	9	9
Chamba .	—	—	—	—	—	—	—
Totals .	—	—	—	2	—	—	73 / 2

Totals above the diagonal represent movements south-westwards. Totals below the diagonal represent movements north-eastwards.

extant in Kawinga's section, which had arrived since the White conquest. My enquiries about the headmen who are recognized by Government were easy, but for those who are not recognized I had to rely on the memories of my informants and I know that many were left out. I am not aware of any bias, but realize that wide generalization from the figures is not safe. A glance at Map II shows that Ngokwe area is the most north-easterly area and Chamba the most south-westerly. The others are intermediate. Of the 75 villages only two had moved counter to this direction, i.e. from Mposa to Liwonde in a north-westerly direction.

I have no measure of the number of villages which have moved entirely out of the Kawinga-Liwonde area, either to other parts of Nyasaland or back to Portuguese East Africa. I have never heard of a village's moving back to Portuguese East Africa, though I have heard of their moving westwards and southwards, and of a few moving northwards.

In Table IV, I set out the origin of villages which have arrived in Kawinga-Liwonde area since the White conquest, and which are still there. This table shows quite clearly, that by far the biggest influx into these areas has been from Portuguese East

2: Mitchell E-5 (1946-1949) 1956 FT7 Yao FT7

TABLE IV

ORIGIN OF VILLAGES WHICH HAVE ARRIVED IN THE KAWINGA–LIWONDE AREA SINCE THE WHITE CONQUEST AND ARE STILL THERE

Origin	Ngokwe	Chikweo	Kawinga	Liwonde	Mpoza	Chamba	Total
Northern Areas:							
Fort Johnston	—	—	—	6	—	1	7
Nyambi	—	3	—	1	1	2	7
Jalasi	1	—	10	6	1	3	21
Southern Areas:							
Malemia and Ntumanje	—	—	—	8	7	28	43
Zomba	—	—	—	4	7	4	15
South of Zomba	—	—	—	2	1	3	6
Other Nyasaland Areas:	—	—	—	3	—	2	5
Port. E. Africa	13	76	111	37	6	30	273
Unrecorded	—	—	—	2	1	31	34
Total	14	79	121	69	24	104	411

Africa. We have no record of how many villages have been lost to the Southern or Northern area from Kawinga–Liwonde area, so that we cannot evaluate the significance of the gain of 64 villages from Southern areas, and of only 35 from the Northern areas. The density of population in Malemia's area is 268 per square mile, and the average density of the Shire Highlands is about 156·6. It may well be that there is now a movement out of the Shire Highlands into the less densely populated Liwonde–Kawinga area.

THE PRINCIPLE OF PRIMACY

Migration and invasion have been the keynote of Machinga histories: village headmen recount with pride how their ancestors moved into Nyasaland with their bands of slaves and followers. 'The East' is the traditional home of the Yao and even young men who have never been there proudly say, 'We come from the East'. This sentiment is reflected in the belief that the rains from the east are beneficial and give rise to good crops, while the rains from the west are detrimental and cause

2: Mitchell E-5 (1946-1949) 1956 FT7 Yao FT7

643 of sorcery, but the representative takes no part in the proceedings
622 at all; he is outside them and is there merely to see that affairs are conducted fairly.

The Value Attached to the United Village

622 The third aspect, the dominant theme in all speeches, is
621 the emphasis on the position of the headman as a leader of a corporate group, and his duty to maintain its unity. The chief and the officiating headmen warn the successor about the possibility of conflict in the village. They advise him to settle differences at once lest these should lead to a split in the village.
[591] They also warn him that his wife's relationships with her sisters-in-law, living as she is, virilocally,[1] are a danger point and may lead to trouble. The danger from the 'husbands' who are members of other villages and whose loyalties do not lie directly with the new headman is made manifest to him. At Nyenje's ceremony the officiating headman remonstrated with Nyenje's sisters because some had left the village without giving him an opportunity to settle their differences. The frequent references to the danger of sorcery are also references to the fear of the breakdown of the village. The villagers are exhorted to respect the headman and to be obedient to him for the general welfare of the group as a whole. Regularly the image of the tree and its branches is invoked, and it is made clear that the headman is dependent on his people for his rank and status, and they on him for their unity.

The disintegration of a village in Yao eyes is a sad affair and
621 the disruptive forces in it must be very strong before a section
166 leaves it. People who want to leave a village are usually remon-
627 strated with and told not to 'break' it. In the frequent conflicts between the headmen and their younger brothers the arbitrators usually try their utmost to prevent a migration. They always award compensation to the injured party and tell the disputants to live in peace, and not to leave the village. Frequently, however, the leader of the dissident group prefers to refuse the compensation money, which is often as much as £6 or £7, and

[1] i.e. living with her husband's kin. I use 'virilocal' and 'uxorilocal' in preference to the older but ambiguous terms 'patrilocal' and 'matrilocal'. See Richards, 'Some Types of Family Structure amongst the Central Bantu', 208–9.

2: Mitchell E-5 (1946-1949) 1956 FT7 Yao FT7

strike out with his adherents to found a new village. A sum of £6 or £7 is a considerable amount in everyday Yao life where the annual cash income of the average individual is not much more. The leader of a dissident group is prepared to forgo this wealth to get one foot on to the lowest rung of the political ladder—that is by becoming a village headman.

Obversely there is a great deal of sentiment attached to the idea of a united village. To the Yao way of thinking a village is broken by fighting or death, and these evils are linked by witchcraft beliefs. The association of death and the break-up of the village is brought out clearly by the funeral ablutions of villagers after the burial of one of their number. An important ingredient in the medicine with which the mourners wash themselves after the funeral, is *cikula*. It is the earth from a particular type of termitary which is usually about 12 to 18 inches high, upright and almost cylindrical. The crust is very brittle and it is comparatively easy to chip off a piece. When this is done a mass of internal chambers and passages is revealed. The soldier ants, unlike those of other species that retreat into the darkness of their passages as soon as they are exposed, come into the open daylight and swarm in confusion over the fractured termitary. When I questioned my informant about *cikula*, he kicked the crust off the top of one of the hills and said, 'See all the houses in the village of the ants? I have broken their village. So it is with death. It breaks the village.'

The Yao believe that death 'breaks the village' and that conflicts through sorcery lead to death. Therefore, conflicts are the real cause of village splits. Hence differences must be settled immediately if the village is to persist, because if they last too long one of the aggrieved parties is sure to start using sorcery against its opponents. Those who do move away, go to a distant place because they believe that sorcery operates only where there is social interaction. But the fear of sorcery on the other hand is just as strong a force in maintaining the physical unity of the village. It is while the migration is being planned that sorcery is most likely to be used. This is particularly so if the village break is taking the form of a lineage split. This happened, for example, in Lupunje village.

Kalambo, the sister's son of Lupunje, wanted to leave the village and had gone to seek a suitable site. When he returned he found that

2: Mitchell E-5 (1946-1949) 1956 FT7 Yao FT7

culties are settled by the marriage sureties [1] who only report to him after the affair is settled. In disputes of unusual gravity, the headman may call in unrelated persons [2] to arbitrate, but he himself must be present.

His own behaviour is expected to be exemplary. Any deviation from the norm is likely to be strictly censured, not only by his own villagers, but also by other village headmen, who may say, 'Important men do not behave in this way.' A man who had an argument with his sister's son was told this. He had taken the dispute to a neighbouring headman who decided against the village headman and rebuked him for behaving in a way not consonant with his position. Village headmen should be above squabbling with their villagers. A village headman who was also a leech had virtually raped a woman whom he was treating. He tried to maintain this was part of the treatment. Her matrilineal relatives reported the matter to the headman of her village and he brought the errant headman in front of the chief who said, 'You are wrong to do this when you are an important man. You are a big man and you act as a commoner does. You ought to be able to show the commoners how to behave.' He was made to pay a compensation of £2 10s. and fined 10s. Had he been a commoner he would have been made to pay a compensation of only 30s.

The ultimate sanction to which all headmen are subject, is that their people will leave them if they behave badly. This was the fate of Cikumba.

In 1944 Cikumba had a village of about 30 huts. The son of the first Cikumba, Meya, had two wives who were living virilocally in Cikumba's village. Meya had enlisted in the army. While he was away, Cikumba, the village headman who was Meya's father's sister's son (though he called him 'father' because of positional succession), started taking Meya's two wives to beer drinks. Meya's sister one day asked Cikumba about his behaviour, but he only said that Meya could not do anything as he was far away. Things had gone too far, however, when one morning he was seen coming out of the

[1] The representative of a spouse in all affairs arising from conjugal relationships. They are usually senior matrilineal relatives. See Chap. VI, pp. 176–7. Their rôle is discussed fully in *Marriage among the Machinga Yao of Southern Nyasaland.*

[2] *Munda juanyambali*, i.e. a person from outside.

2: Mitchell E-5 (1946-1949) 1956 FT7 Yao FT7

622 hut of one of Meya's wives. Meya's sister wrote a letter to tell him
558 of this and he replied that he could do nothing until he returned.
In 1946, Meya returned to be demobilised. The third night after his
837 return he questioned his wives about their fidelity during his absence.
166 They at first held out against him but before long he intimidated them
into admitting that they had slept with the village headman. Meya
now went to complain to Mapata, who was Cikumba's perpetual
mother's brother, and he said that he would come to the village the
next day.

When Mapata came he confronted Cikumba with the accusation. Cikumba denied it until Mapata called the women. When they confessed Cikumba was forced to admit his guilt. Mapata now decided to call in an arbitrator, Isa, an important but unrelated headman who lived close at hand. Isa said he would come the following day when the matter could be thrashed out. When Isa and Mapata came they asked the women about the affair in public. They admitted the charge and Cikumba did not deny it. Isa then remonstrated with him for being a bad man and said that he was ashamed to hear about it. Cikumba had to pay £6 10s. to the injured man, Meya, who, however, refused to take it. He argued that Cikumba ought to have behaved as a father to him. But Cikumba had not. He, Meya, could not remain living in the village because his wives would be as Cikumba's wives. Isa said that he could not object because Cikumba had caused the trouble and had broken the village himself. How could he complain? Meya took two-thirds of the huts in the village away with him.

The Headman as a Representative of a Corporate Group

622 The headman is not only responsible for keeping the peace
689 between the members of his village, but he is also supposed to
control his members in their relationships with other villages.
If members take corporate action against other villages, even if
they do so without the consent of the headman, the chief will
consider the village headman responsible. This was brought
out clearly in the relationships between Cikoja, Mapata and
Masimbo in Chiwalo's section.

622 Cikoja and Mapata are two of the more important headmen in
Chiwalo's section. Masimbo is a minor village headman who lives
689 in Mapata's village area. The quarrel arose over the question of
423 fishing rights in a small pool lying between the two main villages.
226 This pool was excavated by Cikoja and his villagers in 1924 during

2: Mitchell E-5 (1946-1949) 1956 FT7 Yao FT7

621 When a villager died in pre-White days, the hut and personal effects were destroyed. Nowadays, with the improving type of [768] dwelling, which frequently includes well-timbered doors and glass-windows, huts are treated with medicine to cleanse them of the harmful effects of the death and they are used again. But [356] all houses must be repaired continually if they are to remain habitable. Eventually most houses fall beyond repair and new houses must be built. The women pull the poles out of the ground and use them for firewood and the site is planted with pumpkins or maize by the nearest relative.[1] A new hut site is then chosen according to the wishes of the owners. As a rule outsiders are neutral about this, and a village member selects a site in accordance with his or her social position in the village. The women still stay near their mother, but they may build on the outside fringe of a group of huts. When the mother's house collapses she may in turn build her hut on the outside fringe of the group near her daughter's hut. In this way the spatial distribution of the huts gradually comes to reflect the segmentation of the lineage.

621 As the woman's daughter's children grow up and marry, the woman's son persuades his wife's relatives to allow him to take 591 his wife to live in his home village. If he is a polygynist he usually takes the senior wife, but he may take the other or others as well. His own daughters now marry uxorilocally in the village if their mother is still alive. If the parents live long enough their daughter's daughters in turn marry and build their huts there. A crisis comes when either the man or his wife dies. The children have to decide whether to stay where they are or to move back to their own matrilineal village. If they do stay at their father's village they form the nucleus of a patrilaterally-linked group. As they grow older the senior male of their matrilineage may come to live with them. Through the years while this internal differentiation is developing within the village, the huts are decaying and being rebuilt. While new hut sites are being selected the physical form of the village is reflecting the continuing social differentiation.

621 At the same time gardens are being planted and crops reaped 361 each year. The soil in the first garden sites has probably been depleted already and is either lying fallow or is under cassava.

166 [1] Usually the same-heir of a woman, i.e. her daughter's daughter.

2: Mitchell E-5 (1946-1949) 1956 FT7 Yao FT7

As garden land becomes scarcer, members of the village have probably approached patrilateral or affinal kinsmen in other villages for personal grants of land. The lands immediately surrounding the village have long since become depleted and crops will only thrive on lands some miles away; then the village moves its site. How long it will be before this becomes necessary, depends on the fertility of the soil. Most villages must move eventually. When they do they may move a few hundred yards only, or on the other hand, they may select a site thirty to forty miles away. Whether the site is far or near, the migration is not a mass movement of the village as I have so far assumed for the purposes of analysis. As a rule a few villagers, including the headman, move first. The headman may be there a year or more before the second lot of villagers move. They usually move in sorority-groups so that when they build at the new site they place their huts in sections. Thus, the internal social organization of the village is reflected in the same way as before. The whole move may take three or four years before it is completed.

This process of development of the village and its gradual and continual reformation is sometimes hastened by the conflicts that appear within it. I have from time to time mentioned various conflicts that have led to the split of a village and the subsequent migration of one of its sections. The new section sets up a small hamlet in a distant locality, especially if the reason for its secession was sorcery. Here the general process of evolution is started anew. Its parent village, however, is strengthened by the migration since the dissident elements have left it. It continues to carry on its existence and to throw off other villages from time to time.

The number of villages, in the area I studied, is increasing with the increase of population, but the average size of each village remains constant and appears to have done so for many years.[1] But at the same time some villages as entities are disappearing while new ones are being formed. A few new villages become resorbed by their parent villages when for some reason they cannot continue their separate existence. Other villages fragment and do not split. The individual village members leave the village and go their separate ways. Very frequently when

[1] See the argument in Chap. II, p. 40.

1: Tew E-4 (no date) 1950 FT7 Yao FT7

even competing with the Arabs for the inland trade.[1] At some uncertain date there were two migratory movements away from the original home of the Yao. The first was a scattering from Hill Yao to surrounding hills, possibly due to internal dissension.[2] The next movement was caused by an attack of the Makua between 1850 and 1870.[3] One party moved northward, finally settling in Tanganyika, as has been mentioned. Four parties moved south into Nyasaland.

(a) *Achisi Yao*, who first moved from Mwembe to Michisi hill, and then to Nyasaland, where they are represented by those under Katuli Native Authority.

(b) *Amasaniqa Yao*, who first moved to Limaniqa hill, near the Lutwisi river, and then to the south-east of Lake Nyasa, where their descendants are now under Makanjira Native Authority.

(c) *Amangoche Yao*, first went to settle at Mangoche, near Fort Johnston. They were later driven out of Mangoche, by the last group, and scattered.

(d) *Amachinga Yao*, first went to the vicinity of Mandimba hill, near the source of the Lujenda river. They were ousted from this fertile valley by the attacks of the Lomwe, and came into Nyasaland in four parties.

One party of Machinga Yao under Nkata (later called Jalasi, or Zarati) attacked the Yao at Mangoche, drove them south and themselves finally settled there. Another party under Nsamala came with Nkata as far as Mangoche, then turned off to Chisai hill in the Fort Johnston area. A third group, under Malemia and Mtumanja, moved down to the Domasi valley via Isale hill, where they were attacked by the fourth Machinga group, under Kawinga. The latter had also accompanied Nkata's party as far as Mangoche, then crossed the Shire river to the west; here they were attacked by the Maseko Ngoni under Chidiamoja and moved south-east to Chikala, which they occupied until defeated by the British. Liwonde, the brother of Kawinga, moved to the Shire river.

The Amangoche Yao, after they had been scattered by the Amachinga, settled some in the Chiunda part of Dedza district, some at Mount Zomba, some migrated to Ndirande hill near Blantyre, some to Sache hill, some to Chiradzulu, Ngabodi, Malawi, and Nduda hills. These Amangoche Yao constitute about half the Yao population in Nyasaland.[4]

The Yao invasion of Nyasaland was not an organized military expedition, like that of the Ngoni. The first immigrants came peacefully in small kinship groups. They took advantage of Nyanja factions to consolidate their position, until, by 1876, when the Church of Scotland Mission was established at Blantyre, the Yao were a ruling class dominating the earlier inhabitants.[5] At the same time they vigorously carried on their slaving activities. In 1893 Thompson noted that the fertile country of the watershed between the Ruo and the Shire rivers was uninhabited because of Yao raids.[6]

The Yao of Nyasaland suffered from Ngoni raids, but were never subject to them. Several tributes have been paid to their soldierly qualities,[7] and indeed it took five years from 1891, when the Protectorate was declared, before the Yao were subdued and the slave trade, to which they had been principal parties with the Arabs, sup-

[1] Burton, 1873, p. 37.
[2] Hodoul, 1922, p. 7; Murray, 1929.
[3] Historical notes in unpublished administrative papers.
[4] Du Plessis, 1929, pp. 298 and 300.
[5] Blantyre, 1895, p. 12, and Stigand, 1909.
[6] Abdallah, 1919.
[7] Thompson, 1889, p. 99.

1: Tew E-4 (no date) 1950 FT7 Yao FT7

passed. Two contingents of Sikhs were sent unsuccessfully to take Kawinga's fortress in Chikala in 1894; Makanjira was defeated in 1894, Kawinga, Jalasi, Matipwiri, and Tambala in 1896.[1] They were later allowed to return, but they were not recognized as chiefs by the Administration.

The end of tribal wars and of slave-raids made large defensive settlements unnecessary, and the peace saw the splitting up of communities, which rendered the task of the Administration more difficult. The abolition of domestic slavery, by reducing the power of headmen, further contributed to the tendency to live in small scattered settlements. In 1912 the Nyasaland District Administration Ordinance was passed with the object of concentrating the villages into larger communities.

The first movement of Yao from Portuguese East Africa to Masasi took place about the end of the 1890's. According to one account they were originally expelled from the territory between Matola's and Usangu by the Mazeko Ngoni.[2] Then the Makua attacked them, breaking up the tribe still more, so that they migrated north to Masasi, the south-west of the Makonde plateau, and the banks of the lower Ruvuma. At Masasi they were again attacked by Ngoni, but defeated them, and then retired to the Makonde plateau, where they were again attacked by Ngoni. There is a tradition that at some time after 1892 the region was toured by an emissary of the Sultan of Zanzibar, 'Bakisi', who gave the whole country to Matola, a Yao chief, to rule from Newala. In the area between Masasi and the Ruvuma river the Yao are in a majority and politically supreme over their neighbours the Makonde, Makua, Ngindo, Matambwe, and Ndendo.[3] At Mtua, on the Makondi plateau, there is a settlement of Yao who were rescued from the Ngoni on the east shore of Lake Nyasa by Captain Engelhardt, and transferred there. These in outward appearance could hardly be distinguished from the Swahili of the coast.[4]

Demography

The Yao population of Nyasaland has increased steadily but its relation to the total population has not increased:

1901		1931		1945	
Yao population	Percentage of total population	Yao population	Percentage of total population	Yao population	Percentage of total population
189,363	15·0	246,[illegible]	15·0	281,[illegible]	15·7[illegible]

Even in the predominantly Yao areas the population is not homogeneous, either tribally or linguistically. In the three areas in which there are a large number of Yao (Kawinga and Liwonde of Zomba district and Nyambi of Fort Johnston), they represent roughly 48·6, 75, and 73 per cent. of the total population, the next most numerous section being Ngoni (Lomwe) immigrants from Portuguese East Africa.[5] Some Ngoni call themselves Yao when questioned.

The density in these areas is respectively 67·5, 32, and 32 per square mile.[6] This

[1] Codrington, 1898, p. 300; Meinhof, 1, 1909, pp. 86, 100–6, 130–3; Scheer, 1899, p. 400.
[2] Livingstone, 1874, p. 70.
[3] Weule, 1909, pp. 108–98.
[4] Hall, p. 98.
[5] Mitchell and Gomes, 1938, 1931, and 1945.
[6] 1945 Census.

2: Mitchell E-5 (1946-1949) 1956 FT7 Yao FT7

chiefs. Mpumbe's village, which in 1947 was about 2½ miles from Kawinga's court village Nanyumbu, was originally one of Jalasi's adherents. Mpumbe fled with many others when the British attacked Mangoche in 1896. He went to the place where Lake Amaramba spills into the Lujenda River in Portuguese East Africa. When things seemed more peaceful, Mpumbe did not return to Jalasi's area, but preferred to seek his son Ngongondo, who had fled with a section of the village to Kawinga's area. He found Ngongondo at approximately the present site of the village, and settled with him. Ngongondo later moved eastwards to his present home in the Liwonde area. Both village headmen have achieved a certain amount of prestige in their new chiefdoms. Mpumbe was once a court assessor of Kawinga, and now holds girls' initiation rights. They have lost all touch with their former chief and are most unlikely to return to him.

A considerable number of Kawinga's villages moved into Mpona's and Chamba's areas, when they returned to the Protectorate. Their descendants to-day say that they did so because the soil was better in those areas than in Kawinga's.

Shortly after the British expedition, i.e. between 1896 and 1900, the Portuguese Government launched a punitive campaign against the Africans along the Portuguese-Nyasaland boundary. Many thousands of refugees came pouring into the Protectorate. Most of these were Mpotola and Nguru. The great majority settled where they crossed the boundary, i.e. round Chiuta, and Ngokwe chiefdom arose from some of them. After the Portuguese campaigns ended many other migrants came into the area. All those questioned gave Portuguese ill-treatment as the reason for their coming across.

During the first decade of the century the movement, as in the initial invasion, was predominantly south-westwards—from Lake Chiuta towards the Shire River and Highlands. Now, however, the movement is gradual. The first movement of a group may bring it just within the boundary. Then the next movement may take it to the south and west deeper into Nyasaland. Some of my village case histories show this. Table III sets out some movements within Kawinga-Liwonde area (except Chiwalo).[1] I asked about the place of origin of all the villages

[1] I use Kawinga-Liwonde area to include the chiefdoms Kawinga, Liwonde, Mpona, Chamba, Ngokwe, Chikweo and Chiwalo.

2: Mitchell E-5 (1946-1949) 1956 FT7 Yao FT7

The Characteristics of the Three Categories of Headmen

In Table V I have set out the ethnic affiliation of the headmen in the three categories and also the dates of arrival of Newcomers in the Kawinga-Liwonde area. This table shows that

622
563
167

TABLE V

Numbers of Village Headmen who are Aborigines, Invaders and Newcomers

Tribes	Aborigines	Invaders*	Newcomers							Total
			Pre-White	White Conquest—1907	1908–17	1918–27	1928–37	1938–47	Unrecorded	
Yao . . .	—	144	19	60	20	14	13	13	35	318
Mpondo . .	—	53	—	43	21	9	1	1	—	128
Ngoni . .	—	5	2	46	58	40	27	14	17	211
Nyanja . .	25	3	1	4	6	1	1	4	1	46
Unrecorded .	—	—	—	—	—	—	—	—	6	6
Total . . .	25	205	22	153	105	73	42	32	59	716

* In Ngokwe area, 39 villages are classified as Invaders who came into Nyasaland as refugees from the Portuguese military actions at the close of the nineteenth century.

easily the great majority of villages has come into the area since the White conquest. On the other hand, only 3·5 per cent are Aborigines. Just over a quarter (28·6 per cent) are direct descendants of the original Invaders or headmen of villages which have branched off from these. The remainder (67·9 per cent) are the Newcomers who have submitted themselves to the Invaders. Far more Newcomers came in during the decade following the White conquest than in any of the more recent decades.[1] We cannot argue directly from these figures that the greatest influx of Newcomers into Nyasaland took place before World War I. Newcomers in the more recent decades may be as numerous but may be passing out of the area more quickly, and therefore are not recorded in my survey. On the other

[1] Ngoni immigration in 1918–27 was due to exceptional causes.

2: Mitchell E-5 (1946-1949) 1956 FT7 Yao FT7

623 hand, all villages tend to disappear in time. We should there-
543 fore expect more of the headmen who came in during the
167 earlier decades to be forgotten, and the trend should be more pronounced than it is. In fact we know from other sources that immigration of the Nguru, who represent about one-half of the Newcomers, was greatest before 1930, and it is almost certain that the figures do reflect the change in the amount of Nguru immigration, and that the factors which may operate against the trend are not important. As a whole the set of figures suggests that immigration is slowly coming to an end.

622 The Aborigines are all Nyanja. Among the Invaders, 70·2 per
543 cent are Yao, 25·9 per cent are *Mpotola*, and the remainder 3·9 per cent are Nyanja and Nguru. The *Mpotola* Invaders are practically all in the Ngokwe and Chikweo areas, so that in the other areas (i.e. in Liwonde, Kawinga, Chamba and *Mpona*) the Yao represent 94·9 per cent of the Invaders; the remainder are *Mpotola*. Under Ngokwe and Chikweo who are *Mpotola* chieftains, 54·5 per cent (48 of 88) of the Invaders are *Mpotola*, and 37·5 per cent are Yao, and the remaining 8·0 per cent are Nyanja and Nguru. Among the 486 Newcomers, 35·8 per cent of the headmen are Yao, 15·4 per cent *Mpotola*, 43·8 per cent Nguru and 4·9 per cent are mainly Nyanja. In general, therefore, we may say that the Aborigines are all Nyanja; the Invaders are Yao in the major area and *Mpotola* in the other area; and the Newcomers are predominantly Nguru from Portuguese East Africa, though there is a fair proportion of Yao who have come from other Nyasaland districts.

There are significant differences among the three categories of
622 headmen in their religious affiliations. In general there are more
795 Moslems (71·8 per cent) among all headmen than Christians or
797 Pagans. But there are more Moslems among the Invaders than among either the Aborigines or the Newcomers.[1] There are more Pagans among the Newcomers, but the proportion of Christians among the Aborigines and the Newcomers is about equal (25·0 per cent and 21·9 per cent). These differences in religious affiliations are consistent with the different historical backgrounds of the two groups. The Invaders are the descendants of the Yao slavers, who in the past had been in intimate

[1] Invaders = 90·1 per cent; Others = 63·9 per cent; Diff. of per cent = 27·2; S.E. of diff. = 3·7; C.R. = 7·2; $p < 0{\cdot}0001$.

3:Stanner D-5 (ca. 1912) 1922 FT7 Yao FT7

That these several sections of the Wayao differ in many respects may be seen by comparing the Amangoche of *Africana*[1] with the Amachinga of this article. I am not sufficiently conversant with the Amangoche to make a definite statement on this point but I am inclined to believe that after longer residence and wider knowledge, Macdonald would have found that some of his statements needed revision. Those whom he considered the "Yao proper" but whom I prefer to speak of as the Amangoche seem to have a considerable admixture of Anyanja, since their language contains many Chinyanja words and many of their customs are practically those of the Anyanja. I am of the opinion that the Amachinga may be regarded as more typical of the Wayao, and except when ambiguity might arise, I shall speak of them as the Yao.

The original home of this Bantu speaking people is uncertain; in historic times all the sections of the Wayao were originally grouped in that part of Portuguese East Africa around the hill called Chao, whence they probably derived their name, Wa Chao or Wa Yao. About the middle of the nineteenth century, as the result of inroads by neighboring tribes of Abako from the southeast, and raids by the Makwangala, a branch of the Angoni of Zulu origin, from the northwest, disruption of the Yao people occurred, and the divisions mentioned above, moved toward Nyasaland. The Mamanga branch settled for the most part along the eastern shore of Lake Nyasa but a sub-section known as Tambala Yao reached the west side of the lake. The Machinga made a settlement near Lake Chiuta under a number of old chiefs, including Malenya (Nakutumbe), Kawinga, Chawinda, Kalindula, and Mazio.

The descents of the Makwangala again caused the Wayao to move on from Chiuta to Nawinga on the Mikoko stream. Here Malenya suffered another defeat at the hands of the Angoni; many of his people were driven off and taken to the neighboring Angoni country where they were held in captivity for some time. Finally they were rescued by the enterprise of one of Malenya's old men, Kalungula, who went alone to the Angoni, saying that he wished to live with them and with his own brethren. One day, he asked the Angoni if they would like to see their captives dance, and when they assented, he called the Yao together, and clapping his hands to keep time, he began to sing one of their dance songs. Gradually he gathered all the Yao into the village open space, dancing and singing; then, keeping to the same air, he told them why he had come, using their own language which the Angoni did not understand. "Malenya, our chief, remains at the Mikoko stream. It is not far off. We must all join him again. Now dance for joy. If anyone does not return them, it is his own fault." Then, a few at a time, the dancers left the crowd and stole away into the bush and, as night came on, they all made off and reached Malenya's camp in safety.

Malenya's people were again attacked by the Angoni, and on this occasion they defeated their enemies. The Angoni retreated and skirting Zomba mountain, reached the third

3: Stanford D-5 (ca. 1912) 1922 FT7 Tao FT7

River at Mpindi where they intended to settle. Here, an old chief, knowing that their presence would cause trouble, persuaded them by talks of many cattle far away on the other side of the river, to cross over, and there they remained.

Kavinga and Malenya, then, to avoid further raids from the north went down to the Upper Shiré River near Lake Pamalombe, Kavinga going to Mvera, while Malenya stayed on the east side of the river among the Anyanja, claiming friendship with them because they have many of the same clan names. Later, Malenya moved up to the highlands about fifteen miles north of what is now Zomba, and Kavinga went to Chikala. Malenya was friendly with the Anyanja chief, Chenyani, who was of his clan, and was therefore able to buy from him for a red blanket all the country from the Likwenu stream to the Namadi River, a district thirty to forty miles long. There he people settled.

Kavinga was once again attacked by the Makwangwala from the north, but beat them back, after which they returned to the country whence they came — German East Africa near Lake Nyasa. The Angoni chief was killed in this battle, and the story goes that two Yao captives were told off to carry the embalmed body back to the Angoni country for burial. As they were not provided with food for the journey, the two men began to eat the corpse. After several days, this was discovered; one of the men was killed but the other escaped to tell the tale. These were barbarous days, and the Yao relate that after raiding a village, the Angoni would leave a pot cooking on the fire with the body of a child in it, well covered with leaves, so that when they had gone away with their booty and the villagers who had taken refuge in the forest returned hungry, they would start eating the leaves and then come upon the body of the child, and having eaten of the juices of a human body, they would have committed a terrible sin.

The immigration of the Amachinga into the country around Mangochi mountain caused the Amangoche Yao settled there to move. They passed into the Ntondya and Mlanje districts, and invaded the country of the Anyanja. The chief, Malenya, known as Nakwambo died about 1880, and was succeeded by his nephew, a sister's son, according to the Yao custom. This nephew, Wandalama, then took the name of Malenya.

In consequence of this succession there was considerable bad feeling between Wandalama and the other aspirant to the chieftainship, his cousin, Kanenja. The latter moved down to the plain below Zomba mountain to the south, where he gathered about him a band of friends and endeavoured. Malenya decided to attack him and with this purpose, sent two messengers, Wapiti and Mayondola, asking Chikwi and his Angoni to come and do the job for him. Led by Nyamuka, Nyamadi, and Kalanji, the Angoni came from the Shiré River opposite Ntondya, via Mulanje. They attacked and routed Kanenja who, owing to the thick country, managed to fall back with most of his people toward Lake Chilwa. Here he was received by his cousin, Chimombo, a son of Nakwambo, and father of my interpreter, Chenga, who ruled among the Anyaw. Afterwards, he moved to Mpindi on the Shiré where he built a stockaded village.

* Died July 14, 1916.

3:Stanner D-5 (ca. 1912) 1922 P77 Yao P77

After the defeat of Kumtaja, Chikusi and his Angoni routed Kumtumanja, a brother of Malemya, who had also been making a nuisance of himself. Kumtumanja, who suffered from a large hydrocele, is supposed to have lost his balance on account of this impediment, and fallen into a stream where he had stopped to drink and to have been drowned. 175 167 648

The Angoni still burned for more warfare, and Malemya, fearing that with his work done, they might prove a nuisance to him, turned them on to the Amangoche Yao around Blantyre. Thither they set off on a raiding expedition and returned to their own country via Chiwalenda. This raid took place in 1884.

During the next few years, Kawinga, who had always held a grudge against Malemya for having got ahead of him to the best country, occupied the chief with raiding and warfare. In 1891, Wamlalenza died, and was succeeded by Chimala, the son of his sister, Chidgero, and at the present time, he is the reigning Malemya.

It is of these Amachinga Yao under Malemya that the following notes are written. I have gone at some length into the history of these people in order to disarm criticism by those who, familiar with other sections of the Wayao, may not agree with all my statements.

Life History. Generally speaking, the life of the Yao native in the old days was full of 181
more spiced with the excitement of intertribal warfare. He cultivated his crops, kept a few goats and chickens, and relieved the monotony by hunting. Even domestic slavery was not a great hardship, nor did the Yao probably suffer from coast slave-raiding to the same extent as many other tribes. As children, they are wont to spend their days free from care, seldom reprimanded, and rarely or never physically chastised. During youth, the more 897
easy lot is theirs, with the addition from time to time of a few small tasks; minor household duties for the girls, such as drawing water, sweeping the hut, and "minding" the baby, while the boys hoe or fetch and carry for their fathers in the village or in the bush. Left to their own devices, they play games,[1] dig out rats' nests, or shoot birds with bows and arrows.

Now, as formerly, when they are about five years old, the girls usually go to live with their grandmother who may then have a number of children around her; or several girls of a somewhat more advanced age may sleep together in a hut dormitory. Boys of this age all live in a big hut called *ngombo ja chachanda*, "the boys' dormitory." This is their quarters until one by one they leave to get married. The girl, similarly, remains in the girls' dormitory or with her grandmother until she is taken in marriage.

Puberty. The first interruption of this placid life of youth is the event of puberty or the 831
first initiation ceremonies.[2] Formerly, these ceremonies took place after puberty but of late years, as is pointed out elsewhere, they are performed much earlier.

Child betrothal. Betrothal in childhood or before birth is not uncommon. A woman 584
learning that some friend of hers is pregnant will arrange that if a girl is born, her son will marry the friend's daughter, or a man taking a fancy to a little girl will asket her as his

[1] Vide infra, p. 365. [2] Vide infra, p. 366.

6: Mitchell E-5 (1946-1947) 1949 FT7 Yao FT7

They are semi-subsistence cultivators who own no cattle and whose diet is therefore largely vegetarian, viz. sorghum and maize-meal with ground-nuts and beans and certain leaves together with a small quantity of cassava roots. 105

Marriages are contracted early in life with little difficulty and ceremony. Formerly girls were espoused as mere children, and this still happens, but whether the custom is falling away or not I could not check quantitatively because the memories of the old women who had been married as children forty or fifty years ago could not be relied upon. Table I shows the ages at first marriage for a sample of 121 married women for whom this information was available. 582

Where marriage takes place so early we can expect that the mean age when child-bearing commences will also be early. Table II shows the median age of mothers at the birth of their first child. 163

TABLE II. *Age of Mother at Birth of First child*

Present age-groups of mothers	Age of mother at birth of first child									Total	Median age at birth of first child
	10½–15	15–17	17½–20	20–22½	22½–25	25–27½	27½–30	30–32½	Over 32½		
Under 30	9	16	14	17	6	4	..	..	..	74	17·9
30–45	10	14	10	9	4	7	3	4	3	66	19·8
Over 45	1	7	9	9	3	6	1	3	1	46	20·6
Totals	20	37	31	35	13	17	6	7	4	186	19·3

From these two tables it is clear that nearly all women in the community are married early and that child-bearing commences very soon after marriage.

Table III shows the conjugal status of all women over the age of 15. 162

TABLE III. *Conjugal Status of all Women over the Age of 15*

Present age-groups	Never married	Wives of			Divorcees	Widows	Total
		Monogamists	Polygamists	Labour migrants			
Under 20	29	15	3	4	..	..	47
20–30	3	27	18	9	9	3	79
30–45	1	31	19	3	9	3	70
Over 45	..	14	10	1	11	16	52
Total	37	87	50	17	29	24	248

Here we see that of all women under 45 (194), 141 (73 per cent.) are married, though only 87 (45 per cent.), i.e. the wives of monogamists, have their husbands living permanently with them. Another 40 (20 per cent.) were married to men who were married to other wives, so that while their husbands were not living with them permanently they were nevertheless with them periodically. Eighteen other women (9 per cent.) were married to men who had left to work outside the area and hence were not living with their wives at all at the time of the survey. Visits by men to places of work outside the area may last 2 years or more. It should [595] [591] [167]

[P.142 A]

II. THE POLITICAL STRUCTURE
Before the whites came

173
643
167

It is difficult to picture what the political organization of the Yao was like before the Whites came into the area, but informants—especially the old men—do describe the conditions that existed in the early days, and in addition to this, there are some useful reports in Duff Macdonald's book[1] which was written before European influence was strongly felt.

Informants describe the movements of the Yao into Nyasaland in terms of small family groups under the leadership of a male matrilineal relative.[2] These leaders bear the same names as certain of the village headmen to-day, and the present village headmen claim to be their matrilineal descendants. Among the kin-group leaders were such outstanding personalities as Kawinga, Liwonde and Nkata.[3] These men were military and commercial leaders and much of their prestige derived from their prowess in trade and war, pursuits which in those days were intimately interdependent. People nowadays describe the chiefs as possessing many slaves, guns and gunpowder and having great "strength". In the history of the chiefs Nkata, Liwonde and Kawinga the pattern of conquest is similar. A group of village headmen under each chief moved into Nyasaland to settle either by treaty as Nkata who settled with a clan-relative among the indigenous Nyanja, or by direct conquest as Kawinga. After settling down they started sending out forces to subdue local chiefs until the boundary of the territory of some other powerful chief, usually another Yao, was reached. When this happened a definite territory was agreed upon by the two chiefs. Within this territory the population was increased by immigration from other areas or by slavery. Village headmen moved from a less to a more powerful chief because of the security he offered them. They were said to "seize the leg"

8:Mitchell E-5 (1946-1947) 1949
[P. 142B] FT7 Yao FT7

II. The Political Structure
BEFORE THE WHITES CAME

173 643 167 (*kukumula lukongolo*), i.e. to surrender to the chief in the area. Also the chief sent out expeditions to capture slaves or he purchased slaves with the cloth and beads he had exchanged for ivory at the East coast.

643 421 Within his territory certain privileges and rights were held by the chief and he had certain religious duties to perform in which the unity of the people in the territory was expressed. In general the chief had rights over any ivory either found or hunted in his territory. If a dead elephant were found the tusks belonged to the chief, though he usually rewarded the finder with cloth. [224] If a man killed an elephant the tusk that lay on the ground belonged to the chief while the other belonged to the killer. The killer's tusk was in- [439] cluded in the chief's caravan to the coast and its value paid in cloth to the killer when the caravan returned.

643 657 The chief was also entitled to an annual tribute of food and beer from all villages in his area, but this was used to entertain visitors who came to the court-village.

643 782 The chief's religious duties lay mainly in propitiating the spirits of his ancestors on occasions when the community at large, in contrast to the chief's own private affairs, was either threatened or directly affected. The most obvious occasion was immediately before the rains came when flour was poured on the tree shrine and the spirits of the ancestors asked for good rains. Later when the rains were over a similar sacrifice was made asking for a good harvest. Sacrifices to the ancestors were also made on two other public occasions. They were made when some calamity had occurred or was believed to be impending. A run of unsuccessful campaigns induced Cingwalugwalu, a son of the Yao chief Mponda near Fort Johnston, to ask his father's father's brother to make sacri-

1: Tew E-4 (no date) 1950 FT7 Yao FT7

I. REGION OF MOZAMBIQUE

YAO, MAKUA-LOMWE, MAKONDE

In the region between Lake Nyasa and the east coast of Africa, between the Lukuledi river in the north and the Zambezi in the south, there is a congeries of peoples whose culture is very similar over the whole area. They are the *Makonde* group, the *Yao* and the *Makua-Lomwe* peoples. Of these only the Yao has been studied in detail. The scanty information about the other inhabitants of the region will be summarized after the fuller summary of the Yao material, so that points of similarity and difference may appear more clearly. Fortunately for this procedure the Yao occupy a central position, from which they may be taken to represent in many ways the culture of the neighbouring peoples. 101 171

The *Makonde* inhabit the Makondi plateau between the Lukuledi and Ruvuma rivers (39° and 41° longitude). Closely related to them are the *Matis*, on the plateau of that name, south of the Ruvuma; the *Muera*, north of the Lukuledi river, on the Rondo plateau; and the *Matambwe*, in the Ruvuma valley. It is possible that the *Ngindo*, *Ndonde*, and *Ndendule* should also be included. This group seems to be culturally and linguistically distinct in several points from the Makua and Lomwe, and the Yao, although they have in common the main features of political and social organization. 130

The region of the *Yao* is between the Ruvuma, Lujenda, and Luchilingo rivers. They also extend into Nyasaland and Tanganyika Territory. 131

The *Makua* occupy the area between the Lujenda and Lurio rivers and the coastal strip from the mouth of the Lurio nearly to Quilimane. 130

The *Lomwe* are sometimes regarded as a sub-branch of the Makua, but probably have as much right to be called a separate tribe as the Yao. They are bordered by the Makua on the north, east, and south, and by Marevi on the west. South of them, around Quilimane and east of the Mlanje[1] mountains, are the *Chuabo*,[2] related to the Makua and Lomwe, and also the Podzo, on the south bank of the Zambezi delta.

The region is forested lightly or heavily, and varies in character according to the elevation, soil, and humidity. The coastal belt from Mozambique northwards has thorn-bush vegetation, thick in parts, giving way to light forest and grassland farther inland. In the uplands there is good forest, broad-leaved and evergreen, and deciduous trees near the lake district. Throughout the territory there are narrow strips of richer vegetation along the watercourses, and along the coast mangrove swamps occur at intervals. In the highlands the mornings and evenings are cool and pleasant for eight months of the year, and it is even cold at night in May and August, temperatures of 50° and 60° F. being common in the day. In the hot season the heat is severe, especially in the valley of the Ruvuma. The mean annual rainfall for Mozambique is 39.50 in. and for Likoma on the lake, 39.9 in.[3] 133 132

The people are primarily cultivators, but the Yao keep cattle in the highlands. Both Yao and Makua traded with the Arabs and were energetic slave-raiders. The coast Makua and most of the Yao are Islamized. 135

[1] *ch* pronounced as *ch*.

[2] *Handbook of Portuguese East Africa*, 1920, pp. 68–70.

[P.1]

1: Tew E-4 (no date) 1950 FT7 Yao FT7

764 performed these services used to enter a special relationship of privileged familiarity with
767 the village of the dead. This has died out in Nyasaland, but accounts of *Utasi*[1] among the Yao at Masasi and Songea suggest that something of the kind is still practised.

Chiefs and headmen are not buried outside the village, as are other persons. They used to be buried before their own huts, but now in the centre of the village. Shrines were raised over their graves, at which offerings of beer and flour were made. If the village was moved the pot of beer sunk into the ground at the chief's grave was also removed and reinstated at the new site. A dead slave was buried by his fellow slaves; normal rights of sepulture were denied to suicides and to persons who had died in taking the poison ordeal (that is, convicted sorcerers).[2]

OTHER DISTINCTIVE CULTURAL FEATURES

301 The Yao have a tribal mark of two short cuts on each side of the face between the
304 eye and the ear.[3] Their women did not wear the *pelele*, lip-ring, although their neighbours the Makua and Makonde did;[4] the fashion seems to have spread to south Nyasa
171 in the 1880's, as many travellers commented on it, without distinguishing whether the wearers were Yao, Nyanja, or Lomwe.[5] The women used to pierce the left *ala nasi* and insert a metal or lead stud, *cipini*.[6]

MAKUA-LOMWE

TRIBAL AND SUB-TRIBAL GROUPINGS AND DEMOGRAPHY

Nomenclature

The *Ma-* in *Makua* is not a prefix, but part of the name. Variant spellings are *Makua*, *Makua*, *Makuane*. They are sometimes referred to by the name of one subdivision, the Mudo Makua, and called *Aseto* or *Meto*.[7]

The *Lomwe* (also spelt *Lomwe*) are called *Alolo* by the Yao, and are also frequently called *Angoro* (*Ngoro*) which is an old name for the people of the region.[8] Any of the *Makua-Lomwe* peoples who have migrated into south Nyasaland are collectively termed *Ngoro* in official reports; Ngoro is a hill in the region of Portuguese East Africa, whence they come, but they should not be confused with the Ngoro of Tanganyika.[9] Another name for them is *Arolomo*.[10] *Alolo* is incorrectly applied to all the Lomwe; it has a stricter application to the Cuabo from Quilimane.

[1] Swinburne, 1907; Murphy, 1950; Spire, 1949.
[2] Main sources for burial are: Johnston, J., 1902, pp. 28–30; Freeman, A. 1912, pp. 140–4; Abdullah, 1919, pp. 19–21; Duff, 1905, pp. 320–1; Macdonald, 1882, vol. I, pp. 119–22.
[3] Murphy, 1950, p. 123.
[4] Thompson, 1882, pp. 39–8, writing of the Yao of the Ruvuma valley.
[5] Macdonald, 1882, vol. I, pp. 16–17; 'around Blantyre hardly any women is without it'.
[6] Swinburne, 1, 1907, p. 308.
[7] *Handbook of Portuguese Nyasaland*, 1921, p. 32; Murphy, 1950, p. 38; Wade, 1, 1909, p. 229; Livingstone, 1874, p. 30.
[8] Thiel, 1891, pp. 272–77; Gaspar Bocarro passed through Mangoro country. Burton, 1873 (Lacerda's journey, 1798), mentions Mangoro.
[9] Abraham, 1940, p. 11; Murphy, 1950, p. 38.
[10] Johnston, H. H., 1, 1897.

843 842 *Pregnancy and childbirth.* An event of the first importance in the Yao world is the first conception or rather the "quickening" with the first child, *Lilaw*; this is described below, together with the other ceremonies of the *Unyago*.[1] After the ceremony of *Lilaw*, the period of waiting until the birth of the child passes without further event. A point of medical interest is that native women suffer in many cases from "morning sickness" during pregnancy. That they may have perverted appetites is also recognized, grain husks and crabs being among the things most commonly desired. As the Anyanja,[2] the Yao believe that the child develops from the semen of the male, although the growth of the child is in some way connected with the mother. [71]

844 When labor commences, the woman retires to the bush a few hundred yards away from her house, attended by some friend, seldom a midwife, and never by her own people, though the mother and the mother-in-law will probably be near the spot. If labor is not completed by evening, they return to the house and the birth may take place actually within its walls. [71] The attitude assumed in labor is the same as that adopted by the Anyanja,[3] the patient semi-reclining in the arms of another woman who sits behind, grasping her belly. The vulva is smeared with a decoction made from the bark of the *mpoza* tree as a lubricant, but no other help is given. *Kumbuli* is the name given to the place of confinement; *m'buli* means the house where the woman remains for a period after the confinement. The Yao recognize the protruding bag of amniotic fluid and call it the "oil-gourd". "*Chinani chikanicha?* (The oil-gourd, has it broken?)." They wait until the placenta is delivered before dividing the cord. This is done with the sharp edge of the outer covering of a maize stalk or sugar cane; a knife is never used. The section is made near the placenta or half-way between it and the child, after tying the proximal end with a bark string.

The woman who receives the child at birth is the *ambuwanga*, friend or godmother. If the infant is born in the bush, she carries it back to the house whither they go as soon as labor is completed. The mother herself, unless she is very ill, goes out shortly afterwards and buries the placenta in the ash-heap, using a stick to dig the hole, never a hoe.

847 After the birth, the mother and child must remain in the house until the umbilical cord separates, during which time the husband does not enter, though he may come to the door to look in at the child.

The day on which exit from the house is made, the floor is entirely replastered with mud. 852 553 303 The baby's head is shaved and a cross is made upon it with *mpeza*, a kind of red pigment. The husband may then receive the child and in the case of a first-born, it is he who gives it its name; other children may be named by the *ambuwanga*, the mother, or the aunt.

When the mother leaves the house to appear in public, the *ambuwanga* who put her *lilaw* on,[4] removes it.

So long as the infant remains in the house, care must be taken as to persons allowed to handle it. A woman who has recently had a menstrual period or cohabited with her husband,

[1] Vide infra, p. [illegible]. [2] Stannus, op. cit., p. [illegible]. [3] Ibid. [4] Vide infra, p. [illegible].

The *wali* thus remain for about a month under the care of their guardians, during which time they receive most valuable instruction as to their behavior to others, especially to their elders and to members of the opposite sex. Their faults are brought home to them and many little pieces of advice given. They are taught the household duties which will be their lot thenceforth and they are forewarned of approaching puberty and what it means to them. 881

During this period their child-names are not used and until their new names are assigned to them, they are called after birds and animals, generally some of the smaller animals, e.g. *Anyingalwe* (*mpingalwe* = the shrew rat), *Alitawala* (*litawala* = a big species of rat), *Analyelye* (*nyelyelye* = the shrew). I have been unable to ascertain whether these have any totemistic significance. 551

The girls are usually given a fright to impress on them the danger of lions; one night an imitation of a lion approaching their enclosure is made when all is dark; then all of a sudden one of the *chewani* armed with big thorns instead of claws will spring upon one of the girls, generally picking out the worst behaved.

When the term of instruction is completed, they again adjourn to *Chiputo* for two days where *Unyago* is danced on the first night by women, on the second night by men. The first day is spent by a party of men and women in the bush, preparing figures of animals and their dress for the dance. The women wear a small garment of bark-cloth called *matakapaiule*, a word which literally means "buttocks of a frog" but which is used with the meaning of trousers and refers in this case to the fact that the bark-cloth is sewn round the upper part of each thigh into a garment like a pair of knickerbockers. Round the abdomen and chest are worn bands made of short pieces of small, decorticated millet stalks; similar bands are worn on the legs and arms, two on each thigh, two on the leg, one at the wrist, below the elbow, and one round the upper arm. In the dark these give the body the appearance of being painted in alternate bands of black and white. They also wear a headdress of the same material. 292 301

On the first evening of the return to *Chiputo*, this party of women appears after dark; they dance in a row, advancing and retiring in step, swinging their arms and moving their bodies to exclamations of *Bi-di! Bi-di!* Other women dress up as men, wearing long beards made of *likanga*, a kind of fibre plant.

The second night, the representations of animals made of grass and bamboo framework supported by men appear, the elephant, the rhinoceros, and various antelopes being the common figures, also the zebra made of painted bark cloth. These animal figures are similar to the *ciwapa* or *ciwapa* of the *Anyanja* and to those of the *Awisa*,[1] but the *nachimwa* is unknown among the Yao. 171

During all these presentations at *Chiputo*, the *wali* seated on mats are the chief spectators and are duly frightened by the performances of the last two days.

[1] Stannus, 'Notes on some tribes of British Central Africa,' op. cit., p. 296.

3:Stannus D-5 (ca. 1912) 1922 FT7 Yao FT7

137 278 cajiba is a more deadly poison and is not used in the poison ordeal but is administered with intent to murder; it is usually given mixed with beer or in porridge. Death is said to be caused in a few hours. *Lipembele:* the Yao name of beetles belonging to the genus *Mylabris*, found in large numbers in June and July in the native gardens where they do much damage to the bean crops. The name is, I think, more especially applied to a species with 136 278 yellow bands, those with red markings being said to be harmless. These beetles are prepared for poisoning food by frying and then grinding into a powder. In this form, they are administered with intent to murder or they may be taken for suicidal purposes, five or six beetles being used. These beetles contain cantharidin in a greater proportion than cantharis itself. The symptoms described by the natives as occurring after exhibition are constipation followed by high fever, and death eight hours later. This same beetle is known to other tribes and is the *nsewe* of the Anyanja.

The bile of the crocodile, *ngenge* (*ndulu*, Chin.); *ngenge* and *ndulu* also are used, meaning the gall-bladder. Crocodile gall has the reputation of being a powerful poison over nearly the length and breadth of Africa. It is known, I think, to all the tribes in Nyasaland. In this district, they qualify their beliefs by saying that the bile of crocodiles from Lakes Chilwa and Chiuta which do not eat men is not poisonous. The poison is also said not to be used on the Lower Shiré River where, and where only, crocodiles are eaten as food by the natives. Among the Yao, the gall-bladder is removed with the contained gall, dried, and then ground in a little mortar or on a stone. The dose of the powder is said to be as much as would cover a sixpence. Symptoms are said to be great pain in the stomach, swelling and discoloration of the tongue, and loss of speech. Public destruction of the gall-bladder of any crocodile which has been killed is said to be the custom on the West Coast of Africa, and the same is true of some tribes in Nyasaland as at Kotakota, but so far as I am aware, this is not done among the Yao. [171]

The gall of other animals is similarly used, but among the Yao I am not quite certain of the species. Lipiri, the puff-adder, certainly is utilized, and I think other snakes, such as *Nahukuti*, a grey, ash coloured snake, *Lisapi*, a water-snake six feet long, and *Sungu*, the scowling snake. Certain lizards are also employed, such as *Likundumbu*, and frogs, both *Chinde* and the running frog, *Chimwemwe*. Scorpions too have found a place among poisonous preparations, so it is said, and likewise, the bile of some mammals. Bamboo fibre, animal hair, the bones of fish, and ground glass, I have also heard mentioned as being administered with the desire to produce a fatal result.

Papal cases made of twigs and the contained pupa (species of the family of *Psychidae*) called *chikwangu* or *chikwa ngwi* (from *kwa-kwa*, "to eat" and *ngwi*, "fire-wood") are said when eaten by cattle to cause death. I cannot vouch for the truth of this nor can I say whether they are ever given to man.

137 278 A wild yam, *mbwa* (*mulupa*, Chin.) is poisonous if not well boiled and the water thrown away, but is not used as a poison so far as I know. The same is true of *ngenge*, a kind of cucumber.

3: Stanton D-5 (on. 1912) 1922 FT7 Tao FT7

never leave any food outside at night, not even the chaff from the grain she has been pounding, but these most miserable of beings be attracted by it.

Chimwe is a word common to several tribes and among them appears to have various shades of meaning. Among the Wayao, the dwarfs are "the little people" of the legendary order. They rob the gardens and come not among the pumpkins; their little footprints can be seen where they have passed hither and thither; fruits and vegetables that they touch will become bitter. To prevent these disasters, the Yao, at the time when their crops are ripening, place different kinds of vegetables at cross-roads, hoping thereby to satisfy the dwarfs and prevent them coming into the gardens. As far as I am aware, the dwarfs have nothing to do with fairies and are in no way connected with *Mwaupe*, to be mentioned below, as Macdonald believed.[1] The chimwe is variously said to be "like a man but rather like an animal." He has two legs but goes on all fours.

The Yao describe another legendary race of "little people" who used to live in this country and who may still be met with, — "who knows?" They were of a very small stature, grew long beards, were very wealthy, quarrelsome, and fierce, and carried spears. When anybody met one, he was immediately asked: "*Mwandwale Jumpi?*", "From how far did you see me?" and it was always well to pretend to have seen the little man coming a long way off and make him believe he was considered quite a big person; if you said "Hallo, I have only just spotted you!", he would immediately spear you. They are commonly supposed to dwell on the tops of high mountains and are iron workers. They are called the *Mwandwale Jumpi*.

There is no relation as far as I know between these two classes of "little people," but I think these stories go to uphold the theory recently enunciated by Hastings Gulliford in his Huxleian Lecture (1914) that folk-lore fables of lobgoblins, etc., have a basis in fact. He believes that dwarf races at one time were to be found, possibly over a very wide area of the globe. In this country, I think it may be that we see the transition from historical facts to true fairy stories.

The Anyanja have the same legend about these "little people," the usual recurrent "where did you see me?" It is indeed not only wide-spread throughout this country, (the Ahenga and Ankonde in North Nyasa district speak of the mwandwanwale who ask the same question), but there is a very similar legend among the Akikuyu in British East Africa.[2]

The chimwe is doubtless the chimwi of the Anyanja, mentioned in Scott's dictionary,[3] as Miss Werner[4] has suggested, for one finds that among the Anyanja at the southern end of the Protectorate, the chimwe is described as having only one side to his body so that he is invisible when viewed from the off side, thus resembling the chimwe who has one half of his body made of wax.

[1] Op. cit., vol. 1, p. 70. [2] H. W. H. Beech, 'The Kikuyu conception of God (Ngai)', Man, London, 1914, p. 49-51.
[3] Op. cit., p. 97. [4] British Central Africa, op. cit., p. 30.

3:Shannon D-5 (ca. 1912) 1922 FT7 Tao FT7

Amusements. Among the natives of east central Africa, the chief form of amusement, 521
apart from dancing, might be said to be sitting and chatting; it is interesting to note that there is a word to express "sitting up all night talking." Often the younger members of the community will gather about one of the older men and listen to his stories of travel or fighting in the old days, and some men gain quite a reputation as raconteurs. Or again riddle-asking is indulged in to pass the time. Women and girls do not assist at these sittings.

Among the Tao youth, wrestling, *ku-lingana* (from *ku-linga*, to try), is practised 526
with a firm grip and no leg-work; the victor always accentuates his victory by hitting the man who is down, and pummelling his face with his fist or a stone.

A ball game, played originally with a ball of native rubber from which it derives its name, *mpira*, is a great favorite among boys. A dozen or more are divided into sides but all mixed up together. The ball is then thrown into the air to a member of the same side, any of the opposite side jumping into the air to try and catch it, accompanied by the clapping of hands to time.

"Hide-and-seek," *chijwanjwan*, and "touch," *chow* or *chaukile* (*chipiani*, Chin.), are played by boys.

Chimuqu: toward the end of the ball game, when it is decided to finish, each boy as he catches the ball puts it to his nose to smell (*ku-muqu*, to smell). He is then "out." At the end of a game of "touch" played in the water, when one touches another, he jumps out of the water, puts his cloth up to his nose "to smell," and is then "out." His cloth may be thrown to him to "smell" while still in the water, after which he gets out without hurry. The object is not to be the last "in." I am unable to explain this custom.

Kamale-kamu is played by girls, naked, from "dof" the mohammedan month when outdoing anything. 524

Mikankao: the Board and Counter game is played in nearly every Tao village. Dr. Sandeman[1] has given a very complete account of a number of the games played by the several tribes in Nyasaland and I need add nothing to his explanation of the methods of playing.

Similar games are widespread throughout Africa and are well known in the West Coast under the same methods. The several games are played, either simply with holes in the ground and small stones, or with a board and a kind of seed procured from Zanzibar. The board is called *mikankao* and the pebbles or seeds or other counters "*mamiro*" (*ijimiro*). Dr. Sandeman uses this word as the name of one of the games. The *Angoni* call the counters *mamiro*. The holes in the board or in the ground (Pl. XXII, fig. 10) are called *ipata* (sing. *chipata*) from *ku-pata*, to strike, hunt, or put down with a thud, to "plant down," and refers to the way the counters are "planted down" in the holes on the board when playing. The large container at the end of the board is simply to hold the counters out of play and is called *mpamba*, "the house," or *kitoko*, "the hole." The counters are

[1] Sandeman G. Sandeman, "Native games of Central Africa," Journ. Anth. Inst., 1903, vol. 33, p. 156-159.

844 believes that she will die. The man's representatives are therefore able to establish the child's paternity from the birth-pang confessions of the woman.

846 The child is kept in the hut where it was born, for six or seven days, while the umbilical cord dries and falls off. During this time (*kwali*) the child is unnamed, and (559) it is named only when it is taken out of the hut. Should it die during this period of seclusion it remains unnamed and is referred to by a special term (*kiepa*, pl. *matepa*). (128) I have therefore been able to enumerate live births by means of the distinction made between miscarriages and still-births (*kwanaga*) and children who lived long enough to be referred to as *matepa*. After the birth of the child the woman may not have 846 intercourse for four or five months. To do so would be to endanger the life of the (855) child with a disease called *ndoka*,[1] which is contracted by a sexually inactive person 834 when he comes into contact with a sexually active person. The husband may have intercourse with a second wife, but must take care to medicate himself so that he does not endanger the life of his child. When the child is about 4 or 5 months of age the parents perform ritual intercourse and medicate the child against the mystical dangers of sexual activity; sexual relations are then resumed.

834 The Yao say that a second child should not be born while the first is still being (855) suckled. Since lactation continues for about two years I am uncertain whether 764 monogynists remain continent, as they say they do, or whether *coitus interruptus* is 842 practised. It is quite usual for husbands to become labour migrants when their children are still very young. I have known women to write to their husbands who are away working and tell them to return because their children have 'grown', i.e. have been weaned. Labour recruiters had difficulty in recruiting men immediately after the soldiers had been demobilized at the end of the war, because the women objected, saying that they had remained childless long enough and the men must first wait until children were born. However, actual examination of birth-dates (163) shows that children are sometimes born within a year of one another and sometimes there are quite big gaps. The two-year gap between children is probably an ideal which few attain.

5. The Estimation of Fertility

(a) *Sundbarg's Age Divisions*

128 As a preliminary estimate of fertility, Sundbarg's trichotomy of ages may be considered. The argument behind this division of the population into Youth, Middle Age, and Old Age is that those populations with a high proportion of youth have a greater tendency to increase. Table V shows this trichotomy for the Yao with the same material for some other populations shown for comparison. Where the gross reproduction-rate is known for the period shown in the table, this is included.

128 At any one time a certain proportion of the population is absent from the area, 162 usually at some labour centre. Hence the proportions of the population are distributed abnormally. In all there appeared to be a total of sixty-three men, women, and children absent from the hamlets, who would otherwise have been living there. Hence in Table V these have been included in the totals in the 'Yao with absentees' proportions.

[1] A disease of this sort is believed in by many Central African tribes. Among the Nyanja-speaking peoples it is known as *ciwapi*.

(191)

Table V shows that the age-distribution for the Yao sample is very similar to certain other populations commonly held to have high birth-rates. There appears to be some correlation between the proportion of youth in a population and the gross

Table V. *Sundbarg's Age Division*

Population	Year	Youth 0-15	Middle age 15-40	Old age over 40	G.R.R.
Yao*	1946	47·3	45·6	10·0	..
Yao with abortions	1946	40·6	47·4	10·0	..
Hindoos†	1901	40·6	47·7	9·7	..
Hungary	1910	40·3	47·7	9·6	..
Canada	1910	40·6	48·3	9·1	..
India	1911	39·3	50·2	9·7	..
Japan	1911	38·9	47·9	13·3	0·98
Bulgaria	1910	34·4	48·0	17·6	0·80
Czechoslovakia	1910	38·3	50·3	13·3	0·90
New Zealand	1916	27·3	50·7	21·8	0·94
Denmark	1910	24·0	54·1	21·0	0·98
Sweden	1910	30·4	54·8	14·8	0·89

* There were 25 in the sample whose ages were not known. These were all adults and have been included proportionately in the two adult groups.

† All data for other populations taken from *The League of Nations Statistical Yearbook 1930/32*.

‡ Interpolated between 1910 (0·98) and 1921 (0·92).

reproduction-rate. Judging from the material presented in Table V a high gross reproduction-rate may be expected among the Yao where the proportion of youth is much higher than in the case of those whose gross reproduction-rates are quoted.

(b) The Proportion of Children under 5 to Women 15-50

Fertility may be judged more accurately than by the stickometer by considering the proportion of children under 5 to the total number of women between the ages of 15 to 50, i.e. the fertility ratio.* In the whole sample there were 147 children under 5 and 150 women between the ages of 15 to 50. This is a ratio of 966 children per 1,000 women. However, women who are going away from the area for a long time, as, for example, wives of men who are going with their husbands to some labour centre, possibly in South Africa or Southern Rhodesia, usually leave their weaned children with their matrilineal relatives. This means that the ratio quoted (966 per 1,000) is, in reality, an over-estimate of the true ratio. In order to arrive at a nearer estimate of the ratio we must consider the children actually born to women in the sample. Table VI classifies all children both dead and surviving born to women between the ages 15 to 55. From this table we adduce that there were 150 women between the ages 15 to 50 (for whom details were available), and among them they had 147 surviving children under the age of 5. This is a fertility ratio of 778 per 1,000 women. Table VII shows the fertility ratio for 18 countries with their gross reproduction-rate for the same period as the fertility ratio.

* It is more usual to take the number of women between 15 and 44, though recently the age-group between 20 and 49 has been used. I have taken the age-limits 15 to 50 because of the early age of marriage, and because it appeared that the average age of cessation of child-bearing is about 50 (see Table VIII). For a discussion of the suitability of this measure of fertility when birth registration is not practised, see T. Lynn Smith, *Population Analysis*, McGraw Hill Book Co., New York (1948), p. 198.

TABLE VI. *Live-born Children, Alive or Dead at Time of Survey. Mothers aged 15 to 55*

162
163

Age of mothers at time of survey	Mothers	Alive or Dead	Number of years elapsed since birth of child								Totals	
			[illegible]	[illegible]	[illegible]	[illegible]	[illegible]	[illegible]	[illegible]	[illegible]	[illegible]	[illegible]
[illegible]	[illegible]	A	[illegible]	[illegible]	[illegible]	[illegible]	[illegible]	[illegible]	[illegible]	[illegible]	[illegible]	[illegible]
		D	[illegible]	[illegible]	[illegible]	[illegible]	[illegible]	[illegible]	[illegible]	[illegible]	[illegible]	[illegible]
[illegible]	[illegible]	A	[illegible]	[illegible]	[illegible]	[illegible]	[illegible]	[illegible]	[illegible]	[illegible]	[illegible]	[illegible]
		D	[illegible]	[illegible]	[illegible]	[illegible]	[illegible]	[illegible]	[illegible]	[illegible]	[illegible]	[illegible]
[illegible]	[illegible]	A	[illegible]	[illegible]	[illegible]	[illegible]	[illegible]	[illegible]	[illegible]	[illegible]	[illegible]	[illegible]
		D	[illegible]	[illegible]	[illegible]	[illegible]	[illegible]	[illegible]	[illegible]	[illegible]	[illegible]	[illegible]
[illegible]	[illegible]	A	[illegible]	[illegible]	[illegible]	[illegible]	[illegible]	[illegible]	[illegible]	[illegible]	[illegible]	[illegible]
		D	[illegible]	[illegible]	[illegible]	[illegible]	[illegible]	[illegible]	[illegible]	[illegible]	[illegible]	[illegible]
[illegible]	[illegible]	A	[illegible]	[illegible]	[illegible]	[illegible]	[illegible]	[illegible]	[illegible]	[illegible]	[illegible]	[illegible]
		D	[illegible]	[illegible]	[illegible]	[illegible]	[illegible]	[illegible]	[illegible]	[illegible]	[illegible]	[illegible]
[illegible]	[illegible]	A	[illegible]	[illegible]	[illegible]	[illegible]	[illegible]	[illegible]	[illegible]	[illegible]	[illegible]	[illegible]
		D	[illegible]	[illegible]	[illegible]	[illegible]	[illegible]	[illegible]	[illegible]	[illegible]	[illegible]	[illegible]
[illegible]	[illegible]	A	[illegible]	[illegible]	[illegible]	[illegible]	[illegible]	[illegible]	[illegible]	[illegible]	[illegible]	[illegible]
		D	[illegible]	[illegible]	[illegible]	[illegible]	[illegible]	[illegible]	[illegible]	[illegible]	[illegible]	[illegible]
[illegible]	[illegible]	A	[illegible]	[illegible]	[illegible]	[illegible]	[illegible]	[illegible]	[illegible]	[illegible]	[illegible]	[illegible]
		D	[illegible]	[illegible]	[illegible]	[illegible]	[illegible]	[illegible]	[illegible]	[illegible]	[illegible]	[illegible]
[illegible]	[illegible]	A	[illegible]	[illegible]	[illegible]	[illegible]	[illegible]	[illegible]	[illegible]	[illegible]	[illegible]	[illegible]
		D	[illegible]	[illegible]	[illegible]	[illegible]	[illegible]	[illegible]	[illegible]	[illegible]	[illegible]	[illegible]
[illegible]	[illegible]	A	[illegible]	[illegible]	[illegible]	[illegible]	[illegible]	[illegible]	[illegible]	[illegible]	[illegible]	[illegible]
		D	[illegible]	[illegible]	[illegible]	[illegible]	[illegible]	[illegible]	[illegible]	[illegible]	[illegible]	[illegible]
Totals	[illegible]	A	[illegible]	[illegible]	[illegible]	[illegible]	[illegible]	[illegible]	[illegible]	[illegible]	[illegible]	[illegible]
		D	[illegible]	[illegible]	[illegible]	[illegible]	[illegible]	[illegible]	[illegible]	[illegible]	[illegible]	[illegible]

* Exclusive are women whose children were not in the hamlet or their data upon would not be determined.

TABLE VII. *Fertility Ratios and Gross Reproduction rates for Eighteen Countries*[a]

162
163
171

Country	Year	Fertility ratio[b]	G.R.R.
[illegible]	[illegible]	[illegible]	[illegible]
[illegible]	[illegible]	[illegible]	[illegible]
[illegible]	[illegible]	[illegible]	[illegible]
[illegible]	[illegible]	[illegible]	[illegible]
[illegible]	[illegible]	[illegible]	[illegible]
[illegible]	[illegible]	[illegible]	[illegible]
[illegible]	[illegible]	[illegible]	[illegible]
[illegible]	[illegible]	[illegible]	[illegible]
[illegible]	[illegible]	[illegible]	[illegible]
[illegible]	[illegible]	[illegible]	[illegible]
[illegible]	[illegible]	[illegible]	[illegible]
[illegible]	[illegible]	[illegible]	[illegible]
[illegible]	[illegible]	[illegible]	[illegible]
[illegible]	[illegible]	[illegible]	[illegible]
[illegible]	[illegible]	[illegible]	[illegible]
[illegible]	[illegible]	[illegible]	[illegible]
[illegible]	[illegible]	[illegible]	[illegible]
[illegible]	[illegible]	[illegible]	[illegible]
[illegible]	[illegible]	[illegible]	[illegible]

* Source: The League of Nations Statistical Yearbook, 1940/41. Only those countries which showed gross reproduction rates based on those census data and in which complete age-groupings were used.

(199) [b] Same used the age-limits up to the [illegible] publication.

There is, as one would expect, a close association of the fertility ratio with the gross reproduction-rate. In fact, the product moment correlation coefficient for this series of data is [illegible]. By fitting a straight line to the series of points it is possible to make an estimate of what we could expect the Tao gross reproduction-rate to be on the basis of a fertility ratio of 7·18. When this is done, the expected gross reproduction-rate falls between 2·99 and 2·43.* It is not suggested that this figure is a reliable estimate, since the mortality rate in the first five years of life must affect the association between the two measures. There are almost certainly differences in this respect between the relatively advanced countries, used to derive this estimate, and the people with whom this paper is concerned. This estimate is used here merely to check the estimate of the gross reproduction-rate arrived at by other means, basing such procedure on the assumption that differences in child mortality are not sufficient seriously to upset the correlation.

(v) *The Number of Children born to Mothers*

Table VIII shows the number of children born alive to women in the sample by age-groups. The Cohrichs, in their survey of population in Ufonde District in

TABLE VIII. *Numbers of Live-born Children to Women of All Ages*

Age group	No.	a	No. of live-births 1	2	3	4	5	6	7	8	9	10 or more	Total 1	2	3	Rate per woman 1	2	3
[illegible]	[illegible]	[illegible]	[illegible]	[illegible]	[illegible]	[illegible]	[illegible]	[illegible]	[illegible]	[illegible]	[illegible]	[illegible]	[illegible]	[illegible]	[illegible]	[illegible]	[illegible]	[illegible]
[illegible]	[illegible]	[illegible]	[illegible]	[illegible]	[illegible]	[illegible]	[illegible]	[illegible]	[illegible]	[illegible]	[illegible]	[illegible]	[illegible]	[illegible]	[illegible]	[illegible]	[illegible]	[illegible]
[illegible]	[illegible]	[illegible]	[illegible]	[illegible]	[illegible]	[illegible]	[illegible]	[illegible]	[illegible]	[illegible]	[illegible]	[illegible]	[illegible]	[illegible]	[illegible]	[illegible]	[illegible]	[illegible]
[illegible]	[illegible]	[illegible]	[illegible]	[illegible]	[illegible]	[illegible]	[illegible]	[illegible]	[illegible]	[illegible]	[illegible]	[illegible]	[illegible]	[illegible]	[illegible]	[illegible]	[illegible]	[illegible]
[illegible]	[illegible]	[illegible]	[illegible]	[illegible]	[illegible]	[illegible]	[illegible]	[illegible]	[illegible]	[illegible]	[illegible]	[illegible]	[illegible]	[illegible]	[illegible]	[illegible]	[illegible]	[illegible]
[illegible]	[illegible]	[illegible]	[illegible]	[illegible]	[illegible]	[illegible]	[illegible]	[illegible]	[illegible]	[illegible]	[illegible]	[illegible]	[illegible]	[illegible]	[illegible]	[illegible]	[illegible]	[illegible]
[illegible]	[illegible]	[illegible]	[illegible]	[illegible]	[illegible]	[illegible]	[illegible]	[illegible]	[illegible]	[illegible]	[illegible]	[illegible]	[illegible]	[illegible]	[illegible]	[illegible]	[illegible]	[illegible]
[illegible]	[illegible]	[illegible]	[illegible]	[illegible]	[illegible]	[illegible]	[illegible]	[illegible]	[illegible]	[illegible]	[illegible]	[illegible]	[illegible]	[illegible]	[illegible]	[illegible]	[illegible]	[illegible]
[illegible]	[illegible]	[illegible]	[illegible]	[illegible]	[illegible]	[illegible]	[illegible]	[illegible]	[illegible]	[illegible]	[illegible]	[illegible]	[illegible]	[illegible]	[illegible]	[illegible]	[illegible]	[illegible]
[illegible]	[illegible]	[illegible]	[illegible]	[illegible]	[illegible]	[illegible]	[illegible]	[illegible]	[illegible]	[illegible]	[illegible]	[illegible]	[illegible]	[illegible]	[illegible]	[illegible]	[illegible]	[illegible]
[illegible]	[illegible]	[illegible]	[illegible]	[illegible]	[illegible]	[illegible]	[illegible]	[illegible]	[illegible]	[illegible]	[illegible]	[illegible]	[illegible]	[illegible]	[illegible]	[illegible]	[illegible]	[illegible]
[illegible]	[illegible]	[illegible]	[illegible]	[illegible]	[illegible]	[illegible]	[illegible]	[illegible]	[illegible]	[illegible]	[illegible]	[illegible]	[illegible]	[illegible]	[illegible]	[illegible]	[illegible]	[illegible]
[illegible]	[illegible]	[illegible]	[illegible]	[illegible]	[illegible]	[illegible]	[illegible]	[illegible]	[illegible]	[illegible]	[illegible]	[illegible]	[illegible]	[illegible]	[illegible]	[illegible]	[illegible]	[illegible]
[illegible]	[illegible]	[illegible]	[illegible]	[illegible]	[illegible]	[illegible]	[illegible]	[illegible]	[illegible]	[illegible]	[illegible]	[illegible]	[illegible]	[illegible]	[illegible]	[illegible]	[illegible]	[illegible]
[illegible]	[illegible]	[illegible]	[illegible]	[illegible]	[illegible]	[illegible]	[illegible]	[illegible]	[illegible]	[illegible]	[illegible]	[illegible]	[illegible]	[illegible]	[illegible]	[illegible]	[illegible]	[illegible]
Total	[illegible]	[illegible]	[illegible]	[illegible]	[illegible]	[illegible]	[illegible]	[illegible]	[illegible]	[illegible]	[illegible]	[illegible]	[illegible]	[illegible]	[illegible]	[illegible]	[illegible]	[illegible]

* Mean live-births. † Var live-births. ‡ Mean live-births. § Two numbers with one live-births and one with twelve live-births. ¶ Excludes six women whose ages are unknown.

Tangwylin Tembury, calculated the average number of live births per woman at various ages. These were as follows (Tao figures for comparison):

	Ufonde	Tao
Under 20	[illegible]	[illegible]
20-30	[illegible]	[illegible]
30-40	[illegible]	[illegible]
Over 40	[illegible]	[illegible]

This seems to support their conclusion that the birth-rate had suffered during the

* The equation for the regression line is $Y = [illegible]$ where Y is the G.R.R. and F the fertility ratio. The standard error of the estimate is [illegible]. A range of two standard errors was used for this estimate.

4c Mitchell E-8 (1946-1947) 1949 FT7 Yao FT7

16.3 last twenty to thirty years, and that it was then returning to normal since the
(27) number of live births in the under-50 age-groups agree in the two surveys, but the figure for the over-50 age-groups is substantially lower for the Tanganyika material than for the Yao.

11.9 The Culwicks, Fortes, and Schapera have used the number of live females born
(12.8) to women past child-bearing as an indicator of the gross reproduction-rate. It was
16.3 not possible to record whether the women in this sample had passed the menopause or not. From Table VIII we see that there is no upward trend in live births per woman over the age of 50. We may therefore take this age as representing the age at which child-bearing ceased. There were 43 women over the age of 50 and they had between them borne 133 live females. This is an average of 3·13 per female.
(3.1) This differs substantially from the figure that the Culwicks arrive at in their study, viz. 1·56.[1] It agrees, however, with the estimates made for the Tallensi (3·1)[2] and for the Tswana (2·34).[3]

There are, however, some serious objections to the use of this figure as a measure of the prevailing gross reproduction-rate. First, it does not take into account those mothers who did not survive the child-bearing period. If it is only the most fecund who die before menopause, we are, in fact, dealing with a sample which is unrepresentative, in that the least fecund are automatically selected. The opposite may also be true, of course, but the fact remains that such an estimate is based on an unrepresentative sample of mothers. Second, it represents the average fertility prevailing over the last fifty or sixty years. If there has been a large change in the fertility at some time during this period, this is included in the average and obscures the rate which prevails now. For example, the material presented by the Culwicks shows that the gross reproduction-rate must be higher than 1·56. The low figure in this case, they suggest, is caused by the famine which followed a rebellion in 1906.

(d) A More Direct Estimate of Fertility

12.8 In order to arrive at a figure which would reflect conditions prevailing more
16.3 recently, a series of tables was constructed, which showed (according to my census sheets) the number of children born in each year between 1917 and 1946, and the number of women in the different five-year age-groups for each of those years. Hence each woman who appeared in the first year (1917) was also counted in 1918. As each new year was considered some had turned 50 and were excluded, and others had turned 15 and were included. Therefore a gross reproduction-rate was calculated for each year from 1917 to 1946. These rates were averaged by adding together the number of women shown in each five-year age-group for five years and adding the number of children born during those five years, and by dividing to arrive at average specific fertility rates. The five-year averages were as follows:

1917–21	4·18	1932–6	2·23
1922–6	3·33	1937–41	3·22
1927–31	3·12	1942–6	2·83

There appears to have been a definite trend in this series, falling from the end of the

[1] The total of 3·13 children per woman was divided by 2 in order to arrive at the number of females per woman.

[2] M. Fortes, op. cit., p. 108.

[3] I. Schapera, op. cit., p. 19.

T: Hetherwick M-5 (ca. 1900) 1902 FT7 Tao FT7

evidence. On the appointed day she dances, *kupina mzimu*, to dance the spirits, or *kusewula*, to rave or prophesy, and in the ravings of the dance she calls out the name of some party who is afterwards accused of being the sorcerer or witch. Followed by a crowd of excited spectators she dances through the village spear in hand, stopping here and there to dig up charms or medicines which the supposed witch has buried in the ground as the instruments of his occult practices. It is only in cases of supposed special difficulty, or when the magnitude of the supposed crimes demands that special measures be adopted for their detection, that the services of such a witch detective are called in. In ordinary cases these appeals are made to the divining oracle who consults his "bone" as a means of discovering crimes of this nature.

Among the Tsee the human being is believed to be the sole possessor of a *linda*. I have been unable to discover any trace of a theory that the *linda* may pass into any animal or inanimate object and thus confer upon it the nature or power of a fetish. Such belief is cherished among the Angoni and Achewa tribes to the westward by Nyasa and the upper Shire River, and the intelligent Tsee is aware of this, but he states that among his people no such belief exists. Even charms which have the effect of healing or warding off disease, or of protecting the wearer from war or wild beasts or other danger by land or water, are supposed to possess this power without any idea of their being possessed by a *linda* or other spirit influence. The nearest approach to such a theory is in the case of certain powerful "doctors" who have obtained special medicine by means of which, at death, they can transform themselves into lions, leopards, crocodiles, etc. Lepers also are sometimes supposed to become hippopotami. But both of these cases must be regarded rather as transmutations of body than transmigrations of soul.

It will be thus seen that the nature of the human *linda* is closely allied to that of the *mzimu*, which are the inspiring agents in madness and in the ecstasy of prophecy or lamentation. What the origin of these inspiring *mzimu* is, or to whom they belonged when in bodily life, the Tsee holds no theory. He is content to accept them as they are, *mzimu tsyse*, "Just *mzimu* and nothing more," as he says.

It is, however, when we follow the disembodied *linda* after death and consider its position and power in the other world that we find ourselves in a region of higher spiritual activities.

In dreams or in fainting fits the *linda* leaves the body but only to return to it with the awakening consciousness. At death, however, it leaves its earthly abode never to return. It is now spoken of as having gone to *mulungu* or *ulungu*. This word, which lies at the basis of all Tsee theories of the place of the soul after death, will be dealt with later on as regards its derivation and connections in the Bantu family of languages. In its actual use it bears two significations.

1. The word *mulungu* is in the first instance applied to the human soul or *linda* after death when it is considered as an inhabitant of the spirit world. Even in life a man, when he meets with any piece of good luck, will be heard to say, "It's my *mulungu*," as if his soul had an influence in determining the character of his

Release 2-5 Jan. 1960 1949 FTI Tec FTI
[redacted]
[P.187 C]

[redacted]

10: Sanderson D-5 (ca. 1920)1922 F77 Tao F77

A Note on Ceremonial Purification among the Wa'Tao, Nyasaland. 55

By Elspeth Sanderson, M.B.C.S., F.R.G.S.

One of the efforts of Europeans informers in Africa is the breaking up of tribal organization and discipline. The rights of the individual being no longer subordinated to the common good, customs formerly observed by the village community as a whole die out, while those affecting the individual are still practised.

This tendency is well seen in the ancient ceremonies of purification among the Wa'Tao which are now rarely performed collectively, though the rulers, however highly "educated," still goes to the doctor to obtain the necessary medicines for removing, for instance, the contamination caused by contact with a corpse.

These collective ceremonies have already been described by various writers in respect of both Nyasaland and elsewhere,[1] but the Tao rites have not, I think, been given in detail, and the following notes may not, therefore, be altogether valueless.

The *Pyapile* ceremony (*kupyapile*, "to sweep") is common to most Bantu tribes. In the simplest form it is said to be performed annually by the Wa'Tao, at the beginning of the twelfth month, most of the months (lunar) being kept by means of a "calendar."[2] The whole village is thoroughly "spring-cleaned," all rubbish

* At this, where the game is played on Sundays' night in the morning, Father Sanderson kindly sang, the song in Spanish was:—

Tiere, pere, quando te vengo,
Tiere, pere, hay mas
Tiere, pere, ahora yo vengo,
Tiere, pere, I shall not be there any more.

Words respected, gesticulate, in the hidden talk.

1 Sir Harry Johnston, K.C., "The Bantu Tribes," pp. [illegible], 1910. Annual Report, Bureau American Ethnology, 1904.

2 Frazer, "Golden Bough," II., 176, 180.

3 A "calendar" consists of a strong bark or two pegs in the wall of the house, or between two poles, on which are threaded twelve pieces of rock, bamboo or cocoanuts. One of these is moved to the other end of the string each time a new month is seen.

2: Mitchell E-5 (1946-1949) 1956 FT7 Yao FT7

TABLE IV

ORIGIN OF VILLAGE HEADS ARRIVED IN THE KWINGA-LIWONDE AREA SINCE THE WHITE COMPANY AND AN ALL TIMES

Origin	1946	1947	1948	1949	1950	1951	Total
Shinkins Area:							
Port Johnson	—	—	—	6	—	1	7
Mlanda	—	3	—	1	1	2	7
Jalali	1	—	10	4	1	3	19
Southern Area:							
Mikanda and Mwanaja	—	—	—	3	7	18	28
Zomba	—	—	—	4	7	1	12
South of Zomba	—	—	—	3	1	2	6
Other Mandala Areas:							
Port E. Africa	—	—	—	1	—	1	1
Unknown	13	16	111	17	4	20	179
	—	—	—	4	1	11	16
Total	14	19	111	39	24	96	271

Africa. We have no record of how many villages have been lost to the Southern or Northern area from Kwinga-Liwonde area, so that we cannot evaluate the significance of the loss of 64 villages from Southern area, and of only 11 from the Northern area. The density of population in Mikanda's area is 268 per square mile, and the average density of the Shire Highlands is about 150-6. It may well be that there is now a movement out of the Shire Highlands into the low density populated Liwonde-Kwinga area.

THE PRINCIPLE OF PRIMACY

Migration and invasion have been the keynote of Machinga history: village headmen recount with pride how their ancestors moved into Nyamkumbi with their bands of slaves and followers. "The East" is the traditional home of the Yao and even young men who have never been there proudly say, "We come from the East". This sentiment is reflected in the belief that the rains from the east are beneficial and give rise to good crops, while the rains from the west are detrimental and cause

2: Mitchell E-5 (1946-1949) 1956 FT7 Yao FT7

crop failures. Also I was told that important village headmen are buried with their heads pointing to the east.

The Yao concept of the past is reflected in the principles of political organization of these Machinga chiefdoms. The invasion is the datum point from which rank mainly stems. We may classify modern headmen into: those who were in the area before the Yao invasion, i.e. the Aborigines; the Invaders; and those who have come in since the invasion and have had to submit themselves to the Machinga chief, i.e. the Newcomers. The principle behind this classification of headmen is fundamental to Yao political structure. Stated most simply it is the rule that MacDonald quoted in describing the development of local organization: 'However large the settlement may become the man that is first in is the chief or headman.'[1] This is, of course, somewhat of a simplification, but the rule contains the essence of the principle. It was reversed for the Aboriginal Nyanja because the Yao subjugated them. But the claims of the Nyanja chiefs to rank because they had occupied the land first were recognized by the Yao who absorbed them into the social structure in positions of high rank.

But the principle holds among the Yao themselves, and for the Ngoni in their movements after the White conquest. The operation of the principle is clearest in the structure of small local areas such as Chiwalo's. When Chiwalo's area was first settled, just after World War I, there were large tracts of unoccupied land. The first headmen to move into this region were Cigwaja, Kapulowa, Nyanja, Makata and Mumbwa. The local chief Chiwalo followed Cigwaja, but as Cigwaja was one of the broader headmen under Chiwalo during the period of invasion, he now recognized Chiwalo as the chief. The area that is now Chiwalo's chiefdom was divided out among these five headmen. As other headmen came into the area they had to approach one of these five for land rights. These, when granted, were granted irrevocably in a block to the new village headman who then had sole rights to distribute the land afterwards. If he had the land to spare, he may have granted a portion of it to yet another village headman, and this action was also irrevocable. The land occupation pattern in any particular area is therefore extremely complex, because in addition to the village garden areas, indivi-

[1] MacDonald, *Africana*, i, 147. See p. 33 above.

[P. 142 A]

II. THE POLITICAL STRUCTURE BEFORE THE WHITE CRISIS.

173
683
167

It is difficult to picture what the political organisation of the Ewe was like before the Whites came into the area, but informants—especially the old men—do describe the conditions that existed in the early days, and in addition to this, there are some useful reports in Duff Macdonald's book[1] which was written before European influence was strongly felt.

Informants describe the movements of the Ewe into Nyanland in terms of small family groups under the leadership of a male matrilineal relative.[2] These leaders bear the same names as certain of the village headmen to-day, and the present village headmen claim to be their matrilineal descendants. Among the kin-group leaders were such outstanding personalities as Kwaiga, Limmale and Nkata.[3] These men were military and commercial leaders and much of their prestige derived from their prowess in trade and war, pursuits which in those days were intimately interdependent. People nowadays describe the chiefs as possessing many slaves, guns and gunpowder and having great "strength". In the history of the chiefs Nkata, Limmale and Kwaiga the pattern of conquest is similar. A group of village headmen under each chief moved into Nyanland to settle either by treaty as Nkata who settled with a clan relative among the indigenous Nyanja, or by direct conquest as Kwaiga. After settling down they started sending out forces to subdue local chiefs until the boundary of the territory of some other powerful chief, usually another Ewe, was reached. When this happened a definite territory was agreed upon by the two chiefs. Within this territory the population was increased by immigration from other areas or by slavery. Village headmen moved from a less to a more powerful chief because of the security he afforded them. They were said to "seize the leg"

II. THE POLITICAL STRUCTURE BEFORE THE WHITES CAME

173 (Sukumale Sakongale), i.e. to surrender to the chief
648 in the area. Also the chief sent out expeditions
167 to capture slaves or he purchased slaves with the cloth and beads he had exchanged for ivory at the East coast.

643 Within his territory certain privileges and rights
921 were held by the chief and he had certain religious duties to perform in which the unity of the people in the territory was expressed. In general the chief had rights over any ivory either found or hunted in his territory. If a dead elephant were found the tusks belonged to the chief, though he usually rewarded the finder with cloth. If a man killed an elephant the tusk that lay on
[p. 24] the ground belonged to the chief while the other belonged to the killer. The killer's tusk was in-
[p. 25] cluded in the chief's caravan to the coast and its value paid in cloth to the killer when the caravan returned.

643 The chief was also entitled to an annual tribute
651 of food and beer from all villages in his area, but this was used to entertain visitors who came to the court-village.

648 The chief's religious duties lay mainly in
712 propitiating the spirits of his ancestors on occasions when the community at large, in contrast to the chief's own private affairs, was either threatened or directly affected. The most obvious occasion was immediately before the rains came when flour was poured on the tree shrine and the spirits of the ancestors asked for good rains. Later when the rains were over a similar sacrifice was made asking for a good harvest. Sacrifices to the ancestors were also made on two other public occasions. They were made when some calamity had occurred or was believed to be impending. A run of unsuccessful campaigns induced Cingwalangwale, a son of the Tao chief Mpondo near Fort Johnston, to ask his father's father's brother to make sacri-

R:Mitchell R-5 (1946-1947) 1949 FTT Tao FTT

[P.142C]

[illegible]

* [illegible], *Africans of the Bush of Southern Africa* (London, [illegible]).
* The traditional male leader is called some phrase (warden of the security group) the village headman some-and (warden of the village) and the chief some phrase (warden of the land). The word some could be translated as [illegible] but the sum of the [illegible] headman and chief are both referred to in the text simply.
* The Kaonde [illegible] is dropped from all the proper names mentioned in this paper.

[P. 180C]

and Yao tribes, who then predominate. These peoples seem to have come from different parts of the continent. Their languages, despite a common Bantu descent and much recent borrowing, remain as distinct as possible and are obviously not modern dialects of one more primitive tongue; their original social structures must, however, have been similar enough to attract them to each other, for they have so intermarried and their customs so fused, that one can now scarcely distinguish their ways of life and village organization. Indeed, while homesteads of apparently pure Nyanja and Yao still predominate, every considerable district contains members of both tribes, with some people, at least, of mixed descent; moreover, and although one perceives a difference of character and manners, and trace it to the influence of Mohammedanism on the Yao, one may well be unconsciously exaggerating. This account of relationship terms, (with brief reference to underlying social structure), must be taken, therefore, to cover the fusion of two once-separate tribes, and Nyanja and Yao equivalents must unless otherwise stated be understood as identical in meaning. In fact, Nyanja often prefer Yao terms to their own.

How far can one take the Nyanja-Yao social structure in order to study it? Ngoni immigrants in this district are few, and their original patrilineal social system has largely succumbed to the customs of these earlier comers. The matrilineal system of the still more recent and numerous Lomwe immigrants is, I believe, (though my evidence is inquiry), exerting a considerable influence on the somewhat dissimilar but also matrilineal Nyanja and Yao.

1: Yao, E-4 — (no date) 1950 FZT Yao FZT

(iv) Another group is on the south-west side of the lake, north of the Ngoni at Dedza and east of the Ngoni of Ntcheu district.[1]

Although these are the main concentrations of Yao, smaller communities are scattered through most of the districts of south Nyasaland.

MAP SHOWING MOST IMPORTANT AREAS CONCERNED WITH YAO INFILTRATION

Distribution of Yao shown as a percentage of the population of each district
(1931 Census)

Over 50%	South Nyasa	75%	10-20%	Dedza	18%
	Upper Shire	60%		Dowa	8%
				Mlanje	6%
30-40%	Blantyre	38%		Chiradzulu	5%
20-30%	Chiradzulu	28%	1-5%	Chikwawa	5%
	Zomba	28%		Ncheu	1.5%

Homage

Nothing is known of the history of the Yao before their settlement at Mumbo.[2] Their contact with the Arab traders from the east coast had probably continued for one years before the Europeans arrived.[3] When Lacerda wrote in 1798 the Yao were

[1] Cunnington, *ibid*, p. 210.
[2] Stannus, n. 1910, p. 1911; Sinclair, 1910, p. 1; Warren, 1910.
[3] Livingstone in 1866 noted the strength of Arab influence.

1: Yaw E-4 (no date) 1950 FT7 Yao FT7

were competing with the Arabs for the inland trade.[1] At some uncertain date there were two migratory movements away from the original home of the Yao. The first was a scattering from Hill Yao to surrounding hills, possibly due to internal dissension.[2] The next movement was caused by an attack of the Makua between 1850 and 1870.[3] One party moved northward, finally settling in Tanganyika, as has been mentioned. Four parties moved south into Nyasaland.

(a) *Achisi Yao*, who first moved from Mwembe to Mchisi hill, and then to Nyasaland, where they are represented by those under Kanali Native Authority.

(b) *Amanenge Yao*, who first moved to Limanga hill, near the Lurwisi river, and then to the south-east of Lake Nyasa, where their descendants are now under Makanjira Native Authority.

(c) *Amangoche Yao*, first were to settle at Mangoche, near Fort Johnston. They were later driven out of Mangoche, by the last group, and scattered.

(d) *Amachinga Yao*, first went to the vicinity of Mandimba hill, near the source of the Lujenda river. They were ousted from this fertile valley by the attacks of the Lomwe, and came into Nyasaland in four parties.

One party of Machinga Yao under Nkaw (later called Jalasi, or Ewali) attacked the Yao at Mangoche, drove them south and themselves finally settled there. Another party under Nawinda came with Nkaw as far as Mangoche, then turned off to Chisai hill in the Fort Johnston area. A third group, under Makenda and Mtumanja, moved down to the Domasi valley via Isale hill, where they were attacked by the fourth Machinga group, under Kawinga. The latter had also accompanied Nkaw's party as far as Mangoche, then crossed the Shire river to the west; here they were attacked by the Mawko Ngoni under Chidzungu and moved south-east to Chikala, which they occupied until defeated by the British. Liwanda, the brother of Kawinga, moved to the Shire river.

The Amangoche Yao, after they had been scattered by the Amachinga, settled some in the Chiwanda part of Dedza district, some at Mount Zomba, some migrated to Ndiwanda hill near Blantyre, some to Isuke hill, some to Chiwalanda, Ngabudi, Mulanje, and Nkala hills. These Amangoche Yao constitute about half the Yao population in Nyasaland.[4]

The Yao invasion of Nyasaland was not an organized military expedition, like that of the Ngoni. The first immigrants came peacefully in small kinship groups. They took advantage of Nyanja factions to consolidate their position, until, by 1891, when the Church of Scotland Mission was established at Blantyre, the Yao were a ruling class dominating the earlier inhabitants.[5] At the same time they vigorously carried on their slaving activities. In 1891 Thompson noted that the fertile country of the watershed between the Ruo and the Shire rivers was uninhabited because of Yao raids.[6]

The Yao of Nyasaland suffered from Ngoni raids, but were never subject to them. Several tributes have been paid to their military qualities,[7] and indeed it took five years from 1891, when the Protectorate was declared, before the Yao were subdued and the slave trade, in which they had been principal parties with the Arabs, sup-

[1] Kirkman, 1891, p. 27.
[2] Stanford, 1932, p. 7; Murray, 1930.
[3] Historical notes in unpublished administrative papers.
[4] Du Pasquier, 1929, pp. 140 and 272.
[5] Murray, 1891, p. 10, and Ringwald, 1929.
[6] Thompson, 1891, p. 20.
[7] Stanford, 1932.

passed. Two contingents of Sikha were sent successfully to take Kawinga's fortress in Chikala in 1892; Makanjira was defeated in 1892, Kawinga, Jalasi, Mariyawiri, and Tambala in 1896.[1] They were later allowed to return, but they were not recognized as chiefs by the Administration.

The end of tribal wars and of slave-raids made large defensive settlements unnecessary, and the power saw the splitting up of communities, which rendered the task of the Administration more difficult. The abolition of domestic slavery, by reducing the power of headmen, further contributed to the tendency to live in small scattered settlements. In 1912 the Nyasaland District Administration Ordinance was passed with the object of concentrating the villages into larger communities.

The first movement of Tao from Portuguese East Africa to Mwani took place about the end of the 1890's. According to one account they were originally expelled from the territory between Marabi's and Unango by the Mandwe Ngoni.[2] Then the Makua attacked them, breaking up the tribe still more, so that they migrated north to Mwani, the south-west of the Makonde plateau, and the banks of the lower Ruvuma. At Mwani they were again attacked by Ngoni, but defeated them, and then retired to the Makonde plateau, where they were again attacked by Ngoni. There is a tradition that at some time after 1890 the region was toured by an emissary of the Sultan of Zanzibar, 'Bakiri', who gave the whole country to Matola, a Tao chief, to rule from Newala. In the area between Mwani and the Ruvuma river the Tao are in a majority and politically supreme over their neighbours the Makonde, Makua, Ngindo, Matumbwe, and Ndendo.[3] At Mtwa, on the Makondi plateau, there is a settlement of Tao who were rescued from the Ngoni on the east shore of Lake Nyasa by Captain Engelhardt, and transferred there. These in outward appearance could hardly be distinguished from the Swahili of the coast.[4]

Demography

The Tao population of Nyasaland has increased steadily but its relation to the total population has not increased.

1921		1931		1945	
Tao population	Percentage of total population	Tao population	Percentage of total population	Tao population	Percentage of total population
[illegible]	[illegible]	[illegible]	[illegible]	[illegible]	[illegible]

Even in the predominantly Tao areas the population is not homogeneous, either ethnically or linguistically. In the three areas in which there are a large number of Tao (Kawinga and Liwonde of Zomba district and Nyambi of Fort Johnston), they represent roughly 48%, 75, and 75 per cent. of the total population, the next most important racial being Ngoni (Lomwe) immigrants from Portuguese East Africa.[5] Some Ngoni call themselves Tao when questioned.

The density in these areas is respectively 63.5, 30, and 50 per square mile.[6] This

[1] Contingents, chiefs, p. [illegible]; Mangham, [illegible]; Sikhosi, chiefs, p. [illegible].
[2] Lomwanda, chiefs, p. [illegible]. [3] Weeks, [illegible].
[4] Hall, p. [illegible]. [5] Mitchell and Greene, [illegible].
[6] [illegible] Census.

1: Yaw E-4 (no date) 1950 FF7 Yao F77

appointed elder in the operation by the marriage service. The couple are referred to 585
elder disputes to the service, and to consult the diviner in case of sickness.* After the
rite these two service have special responsibilities towards the couple; grievances
are referred to them, and they must be present when adultery cases are heard in
court. If the marriage witness ceremony has not been performed, the relationship is
not regarded as legal and no adultery compensation can be claimed by the husband.

Divorce used to be a private affair, which was merely signalled by one party giving 586
to the other an arrow as a token of separation.* Nowadays all divorce cases go to court.
The woman is usually asked to choose between her husband and the adulterer, and
the compensation paid to the former, if she decides to leave him, is higher—amount-
ing to about ten. A man can be sent away from the village by his wife's kin, but if he
has given no grounds for divorce he can claim compensation and will also take back [178]
any gifts made to his wife. A few small gifts to his mother-in-law are not reclaimed.
Divorces are easily obtained and frequent. Grounds for the divorce of a man may
include failure to pay hut tax, one of the specific duties of the husband.

The custom of making a marriage payment is recorded by Johnson* (on the east 583
coast of Lake Nyasa) as a relatively new adoption. When given it is divided between 177
the bride's father, mother, and mother's brother and brother.*

Slavery

Domestic slavery was an important institution in the Yao social system. Slaves were 587
obtained by capture, purchase, or in compensation for injury.* A man would pay a
debt by giving slaves (wives or members of his matrilineal kin group) to his creditors.*
A man might voluntarily endure himself to a man having charge of many women, as
a means of obtaining a wife.* The children of a free man and a slave woman were not
enslaved, as their father could not take them from the village of their mother's
matrilineal, who had the right to sell them.* Slaves took part in the ordinary life of the
village; women slaves ranked as junior wives of their masters and shared the usual
work of women. Men might be supplied with guns for hunting or might accompany
their masters to war, trade for them, spin, weave, sew, make baskets.* The institution [589]
of domestic slavery was an expression of a dominant motif in Yao culture—the associa-
tion of status with a large number of dependents. Its abolition by the British was in
itself a major blow to the prestige and authority of the chiefs.

Information about the social organization of the Yao in Portuguese East Africa is 184
scanty, but it is in agreement with what is known of the Nyamdanda Yao; Shebel, who 602
knew the Yao in Lindi district, Tanganyika Territory, confirms the correctness of
Duncan's account of the South Nyasa Yao.

The Yao came into Nyamdanda in small parties of hunters. Their experience and 175
their superior weapons were enabled them to dominate the Nyanja among whom they
settled, and today they dominate the population of the Southern Province. They are [181]
organized into loose groups of villages, under petty, independent chiefs. They were [61]

* Duncan, p. 1[illegible], p. 1[illegible]; Fonda, 1[illegible]; Johnson, p. 1[illegible], pp. 1[illegible]; Macdonald, 1[illegible], vol. 1, p. 1[illegible]; Women, vol[illegible], pp. 1[illegible]-1[illegible].
* 1[illegible], pp. 1[illegible]-1[illegible].
* Duncan, p. 1[illegible], p. 1[illegible].
* Duncan, p. 1[illegible], p. 1[illegible].
* Women, vol[illegible], pp. 1[illegible]-1[illegible]; Duncan, p. 1[illegible], p. 1[illegible].
* Duncan, 1[illegible] (see Yao a[illegible] [illegible]).
* Macdonald, 1[illegible], vol. 1, pp. 1[illegible]-1[illegible].
* Women, vol[illegible], p. 1[illegible].
* Ibid.

1: Tew E-4 (no date) 1950 FT7 Tao FT7

never to have had any large-scale central political organization, and their history is full of occasions when one group of Yao has attacked another. Even within his own area the authority of the chief was not, apparently, sufficiently strong to prevent one village breakaway from raiding his neighbours; the chief maintained no standing army.[1] The chief held certain rights and privileges. He was entitled to the ground tusk of any elephant found in his territory (the finder was rewarded after it had been sold, with a cloth); he received tribute in food,[2] with which he entertained visitors. He took a share of the spoils of war and was also entitled to annual labour service and to a gift when he made a new burial place. Apart from his military and judicial responsibilities, he had authority to settle when and where initiation ceremonies should be held.[3] The right to hold these ceremonies was sought after by the village headmen as a mark of prestige. The chiefs or headmen of certain families had the right to wear a white cloth bound round their turbans as insignia of rank.[4]

In addition the chief had a certain ritual status. He was thought to incur mystical danger by contact with death, and so was not allowed to attend a funeral nor to eat a chicken brought by a messenger announcing a death, nor to accompany his military expeditions. He was supposed to have great power through special medicines. He had to make offerings to the ancestors, especially in affairs concerning the whole people, such as drought or epidemic. He was expected to give a burial cloth at the death of an important man. At his death a period of social disorganization was recognized, members of his village were allowed to pillage and rape, until he was buried.

Succession to the chiefly office was matrilineal. The chief's position was based partly on his status as the senior male of his own matrilineal kin group, partly on his wealth. His command over slaves, guns, and carriers to the coast was greater than that of others, and from these his military strength was derived, for a chief was powerless without his following of dependants. The chief of the area was also headman of his own village. In fact, the position and duties of a village headman (except that he could not exact tribute)[5] reproduced in small scale those of the chief. The headmen also were in mystical danger through contact with death and were the channel through which the ancestors were approached in affairs concerning the village. They, too, built up their prestige and wealth by slaving activities. They seem to have been largely independent of the chief, carrying on slave raids of their own, and if they could gain a sufficient following, they might break away from the chief, and set up their own chiefdoms.[6]

The chief ruled through a hierarchy of headmen. His councillors were superior headmen, placed over a number of village headmen. Commoners could approach the chief only through the councillor in whose area their village belonged. The councillor's special duties were to report daily to the chief on the affairs of his district, to advise, and to arbitrate in the chief's own domestic affairs, e.g. in conflicts between the chief and his brothers and nephews. The councillors were not necessarily relatives of the chief,[7] but were chosen on account of their general status in the community, and their

[1] Stanton, n. chips p. 100; men of the Yao in the Shire highlands: 'Every month one was not might be set down as a chief . . . petty quarrels of petty chiefs were abundant . . .' Sir Harry Johnston, ciliby, vol. i, pp. 489 and 490.

[2] Stanton, n. 1900, says that only here was usual to him.

[3] Ibid., p. 100.

[4] Ibid., supra, p. 100.

[5] Macdonald, ciliby, vol. i, p. 48; Warren, 1906, p. 180.

[6] Macdonald, ciliby, vol. i, p. 100.

[7] Ibid., pp. 50 and 198.

[8] Ibid., p. 198.

2: Mitchell E-5 (1946-1949) 1954 FT7 Yao FT7

CHAPTER II

THE HISTORICAL BACKGROUND TO THE MODERN SITUATION

BEFORE THE WHITE CAME

TO understand the Yao we must start with the Arab colonization of the east coast of Africa. We know that the Arabs had colonized it as early as A.D. 700. They were a mercantile people, and their trading was so well advanced that by the end of the twelfth century they had founded Kilwa, due east of the north end of Lake Nyasa, as an entrepôt.[1] When Vasco da Gama sailed up the east coast in 1498, he found that the Arabs had well-established posts all along the coast. The Portuguese and the Arabs became rivals for the trade of the African interior, and this rivalry was to continue for many centuries. In 1698 the Imam of Oman drove the Portuguese out as far south as Cape Delgado, and the Arabs had sole control of the east coast[2] up to that point.

The Yao say that their traditional home is between the Lujende and Rovuma Rivers, east of Lake Nyasa. There can be no doubt, therefore, that Arab trading expeditions passed through the Yao territory, especially since the Rovuma Valley is the most convenient route into Central Africa from Kilwa. We can be fairly certain that Yao contact with the Arabs began at least 200 years before the Europeans came.

Although it is fairly certain that the Jesuits from the Zambezi had explored the Shire Valley and the Lake regions, they left no easily available records of the inhabitants of those areas.[3] One of the earliest references to the Yao is recorded by Dr. Francisco José de Lacerda in a letter dated March 22nd, 1798, addressed to the Minister of State of Portugal. In it he explains his pro-

[1] Hichens, W., "Islam in Africa", in Arberry, A. J., and Landau, R., *Islam Today* (London, 1951).

[2] Fage, A., *Economic History of Tropical Africa* (London, 1956), 19.

[3] Burton mentions in a footnote to Lacerda's *Journey to the Cazembe in 1798*, John Murray (London, 1873), 33, that a missionary Jesuit also became resident in this area from 1788 to 1797.

2: Mitchell E-5 (1946-1949) 1956 FT7 Yao FT7

passed visit to the Kanembu of Lagwila regions, known then as the Wiza country. It is quite obvious that the Yao were serious competitors with the Portuguese for the land trade. Lagwila writes:

> The dry goods hitherto imported into this country [i.e. Wiza country], have been bought by the Majao, indirectly or directly, from the Arabs of Zanzibar and its vicinity. Hence these people received all the ivory exported from the possessions of the Cazembe; whereas formerly it passed in great quantities through our port of Mozambique.[5]

It is reasonable to assume that because of their geographical position the Yao had conducted a considerable trade between the interior and the coast, mainly cloth and guns for slaves and ivory—the two were inseparable since the cheapest means of transporting ivory to the coast was by slaves. The Yao trade in slaves led to their major conflict with the British.

When Livingstone made his expedition up the Rovuma in 1866, he found abundant evidence of the influence of the Arabs. Speaking of the Yao chief Mataka, he says: "He gave me a square house to live in, and indeed most of the houses here are square, for the Arabs are imitated in everything."[6] Livingstone mentions in particular the trade in slaves that the Yao were conducting in Kilwa. He records that:

> The Waiyas generally are still the most active agents the slave-traders have. The caravan leaders from Kilwa arrive at a Waiyas village, show the goods they have brought, are treated liberally by the elders and told to wait and enjoy themselves, slaves enough to purchase all will be procured: then a foray is made against the Manganja who have few or no guns. The Waiyas who come against them are abundantly supplied with both by their coast guests. Several of the low coast Arabs, who differ in nothing from the Waiyas, usually accompany the foray, and do business on their own account.[7]

Even before Livingstone had made his expedition up the Rovuma Valley, there had been a large-scale movement in all directions of the Yao from their traditional home. The tradition is that the name Yao is taken from a hill, grass-covered but

[5] Burton, *Lagwila's Journey*.
[6] Waller, H., *The Last Journals of David Livingstone in Central Africa from 1865 until his Death*, John Murray (London, 1874), 75.
[7] Waller, *Last Journals*, 78.

I: Mitchell E-5 (1946-1949) 1956 FT7 Yao FT7

tudow, which is situated somewhere between Mwembe (in Portuguese East Africa) and the Lochilingo Range.[1]

It is convenient to divide the history of the Yao into two major episodes: *firstly* the movement from the Yao Hill to other hills, and *secondly* the movement into and within the Nyasaland Protectorate.

Episode I: The Scattering of the Tribes from the Yao Hill

The *exact cause of the scattering of the tribes from their* traditional home is not clear. Yohannah B. Abdallah suggests that it must have been some internal dissension.[2] Whatever the cause, the tribe broke up into a number of sections, each of which settled at yet another hill from which it took its name. Abdallah lists ten divisions[3] but we need consider only the four that penetrated into British Nyasaland.

These were:

1. The *Achisi Yao*, who settled at Michisi hill.
2. The *Amasanigo Yao*, who settled near the Lisanigo hill (near the Lurwisi River in Portuguese East Africa).
3. The *Amangoche Yao*, who settled at Mount Mangoche near Fort Johnston, south of Lake Nyasa.
4. The *Amachinga Yao*, who settled near the Mandimba hill. They are called Amachinga because of the serrated edge of the range in which the Mandimba hill is situated. [*Lisinga—a fence.*]

Episode II: The Displacement of the Divisions from their Homes[4]

In time, each of the four sections mentioned found its way into Nyasaland. Briefly the details are:

1. The *Achisi Yao* are represented in Nyasaland by the people under Native Authority Katuli in Fort Johnston district. The 1945 Census showed that there were 12,187 Yao under this chief, i.e. 4·3 per cent of the total Yao population of British Nyasaland. However, not all Yao under Katuli are Achisi Yao, and there are no doubt Achisi Yao elsewhere in small numbers; but even

[1] Abdallah, *Chikala cha Wayao*, 7, edited and translated by Meredith Sanderson as *The History of the Yao*, Government Printer (London, 1922).
[2] Abdallah, *Chikala*, 8. [3] Abdallah, *Chikala*, 9.
[4] For information on areas which I did not visit I have drawn heavily from the Administrative file "Historical Notes on Districts".

2: Mitchell E-5 (1946-1949) 1956 FT7 Yao FT7

if we estimate the total proportion as 5 per cent, it is still a small and relatively unimportant group. 175

2. The *Amasaninga Yao* are represented in British Nyasaland by the people under Native Authority Makanjira, and they are roughly 5 per cent of the total population of the Yao of the Territory. Makanjira himself is said to have been of Nyanja origin. He moved first to the Lisaninga Hills, where he acquired a mixed following of Amasaninga Yao and Nyanja; and then by conquest he moved on to the area round Fort Maguire, where he is now established. There are offshoots of the group in Dowa district across Lake Nyasa.

3. The *Amangoche Yao* are of much greater importance, and at present constitute about half of the Yao population of the Territory. During the early part of the nineteenth century, while this group was at Mangoche mountain, it was successfully attacked by the Amachinga Yao under Nkata and Kawinga, and scattered in all directions. Most of the people migrated southwards and settled in the Shire Highlands, where Mlumbe, Chikowi, Kapeni, Matipwiri and other representatives are found to-day.

4. The *Amachinga Yao*[1] were probably displaced from their traditional home, at Mpedimba on the Lujenda River in Portuguese East Africa, by attacks from the Lomwe inhabitants in the east. They say that wide-spread famines followed the war and forced most people to migrate. Present-day representatives of this group are Nkata, Jalasi, Mponda, Kalembo, Nsamala, Nyambi, Kawinga, Liwonde, Malemia and Ntumanje in the Port Johnston and Zomba districts.

The Yao invasion into Nyasaland was not a military incursion of the Ngoni type. Definite evidence on the exact form of the invasion is not available, but informants maintain that many of the first immigrants came into the country peacefully and in family groups (*mbumba*). Often the immigrants found succour with Nyanja groups. Sometimes this hospitality was claimed because the Yao had the same clan names as the Nyanja. The Yao soon took the opportunity presented by internecine struggles among the Nyanja to consolidate their position in the country.

[1] For a more detailed history of this group, especially of the Malemia group, see Stannus, H. S., 'The Wayao of Nyasaland', *Harvard African Studies*, iii (1922), 223 ff.

2: Mitchell E-5 (1946-1949) 1956 FT7 Yao FT7

175 When Livingstone passed the Lake in 1866 he found Mponda living in approximately the same place as his successor does to-day, and he mentioned that Kawinga was living on the west of Lake Malombe.[1] He also mentioned that the Machinga dominated the whole of this area, showing that by this time there had been considerable movement into it. When the Church of Scotland Mission was established at Blantyre in 1876, Duff MacDonald recorded that the disposition of the chiefs was as follows: Mlumbe to the north-west of Zomba; Kapeni near Blantyre at Sochi; Mpama at Chiradzulu; Kawinga at Chikala; Malemia on the south-west side of Mount Zomba, and the Matipwiri at Mount Mlanje.[2] These groups, except for Kawinga, still occupy the same positions to-day. At this time most of the movement into Nyasaland had ceased, and the Yao invaders had already set themselves up as rulers over the indigenous Nyanja. At the same time the Ngoni were making frequent forays into the Shire Highlands and the rest of Southern Nyasaland, so that the position was far from stable.

162 The distribution of the Yao to-day reflects the history of their movement into Nyasaland. The districts nearest and fanning out from the point of entry into Nyasaland, viz. the area due east of Fort Johnston, contain the largest proportion of Yao. The more distant the districts are, the smaller the proportion of Yao in them.

The Entry of the Missionaries

797 The Missionaries were the first Whites to settle in Nyasaland. When he was in Britain in 1858, Livingstone had recommended 175 the Shire Highlands as a suitable place for the establishment of a Mission. Inspired by his reports, the Universities Mission to Central Africa was founded, and in 1861 Dr. Mackenzie was sent out to establish the Mission. It was an ill-starred venture.[3] From the sociological point of view its significance is that it

[1] Waller, *Last Journals*, 109.

[2] MacDonald, D., *Africana or The Heart of Heathen Africa*, Simpkin Marshall (London, 1882), i, 31.

[3] Rowley, H., *The Story of the Universities Mission to Central Africa, from its commencement under Bishop Mackenzie, to its Withdrawal from the Zambezi*, Saunders, Otley & Co. (London, 1866), and *Twenty Years in Central Africa*, Wells Gardner, Darton & Co. (London, 1889), 3rd Edition.

2: Mitchell E-5 (1946-1949) 1956 FT7 Yao FT7

initiated the relationships of Black and White in Nyasaland; and its failure was partly a result of the ambivalent attitude to colonial peoples at that time. The people of Britain were horrified at the cruelties of slavery, but the Mission drew upon itself severe public censure because it took up arms against the Yao slavers in its vicinity. The Mission had to face a very difficult problem. It was ostensibly a teacher of the Gospel. Yet about it the Yao were performing deeds of violence, robbery and murder, and were taking slaves from the Nyanja inhabitants in the area. At the same time hundreds of fugitives and runaway slaves were seeking protection at the Mission. To take in fugitives and runaway slaves was, in African eyes, as political an action as to take physical action against the slavers. Should the Mission close its eyes to these un-Christian barbarities, since they were a part of the secular life of the people, or should it take action against them? Livingstone had had no compunction in releasing slaves, and the U.M.C.A. followed his lead, and not only took in fugitives but actually carried out assaults on parties of slave-raiders. This was the time when the first of the Yao groups under Mpama and Kapesi were penetrating into the highlands. The indigenous Nyanja, whose political and military organization was very weak, ranged themselves around the Missionaries, and tried to use them against the Yao invaders. The situation soon developed into a struggle between the Missionaries and the Yao slavers, in which the Nyanja headmen played very little part. Disaster followed upon disaster, and eventually the Missionaries decided that it would be politic to withdraw from the highlands and allow the situation there to stabilize before they returned. In Britain, however, public opinion had been roused by their militant treatment of the slavers, and the Mission, after losing three of its members, including Bishop Mackenzie, through illness, was moved to Zanzibar in 1862.

After 1862 there were a few expeditions to Nyasaland, but none of great political importance. In 1876, a second and this time successful settlement was made in the Shire Highlands. The Church of Scotland founded a Mission in Blantyre, which comprised a lay section of artisans and a clerical section of preachers. It was particularly careful that any political action should be taken by the lay, and not by the clerical, members,

2: Mitchell E-5 (1946-1949) 1956 FT7 Yao FT7

because it was anxious to avoid the censure which its earlier colleagues had suffered. This Mission also felt it could not stand by and see cold murder done in front of its eyes. Yet fugitives came to it as they had to the U.M.C.A., so that the Mission, despite its unwillingness, was inexorably drawn into political relationships with the Yao in the area. The lay members severely punished certain wrongdoers. Eventually an African was murdered at the Mission. They tried the murderer, found him guilty, and allowed a local headman to execute him. The Home Authorities looked upon this action as a trespass from the Mission's proper function. The Mission suffered severe public censure, and several of the lay members were dismissed. It was clear that a Mission in the Territory could not be a mission alone; it could not escape the political implications of the situation, and for the success of its venture some civil authority had to be established.

The Establishment of British Rule

In the meantime Livingstone's publications were bringing the horrors of the slave-trade home to the people of Britain, and more and more pressure was exerted to bring it to an end. As a result, in 1878, Captain Elton, the Consul at Mozambique, obtained permission to conduct an expedition to Lake Nyasa to enquire into the slave-trade. The British population in the Shire Highlands was now increasing so much that in 1883 a British Consul was appointed. From then on, until the close of the century, Britain followed a militant policy against all slave-traders, amongst whom were the Yao. No active steps were taken to institute a formal government over the territory, until in 1889 the Portuguese appeared at the confluence of the Ruo and Shire Rivers with a large military expedition which they maintained was scientific. Accordingly, on November 21st, 1889, the Acting-Consul declared the territory north of the Ruo to be a British Protectorate. The next year, Mr. A. Sharpe made treaties with most of the Native chiefs in the area. These treaties were later ratified by the Anglo-Portuguese convention of June 1891. It is clear that the British Government was protecting the treaty chiefs against the slave-raiders, and ensuring that no other European power assumed responsibility for this service.

2: Mitchell E-5 (1946-1949) 1956 FT7 Yao FT7

The pacification of Nyasaland after this was largely the suppression of the slave-trade. The Commissioner of the Protectorate (H. H. Johnston) wrote in 1891:

I felt bound to make our Protectorate of Nyasaland a reality to the unfortunate mass of people who are robbed, raided and carried into captivity to satisfy the greed and lust of the Yao race, these again being incessantly incited to engage in interminable war and slave-raiding forays by the Arab and Swahili slave-traders who travel between Nyasaland and the German and Portuguese littoral. The big men in this part of the Protectorate with whom it behoved me to deal and whom I must either persuade or coerce into acceptance of an anti-slave policy and sufficient subservience to the new administration as would put an end to further civil wars and inhumane practices, were the following:

Makanjila and Kasumbe, ruling on opposite coasts of the south end of Lake Nyasa.

The Makandanje clan of chiefs (Tshindumba, Zarafi, Nkaza) which dominates the country between the east bank of the upper Shire, Lake Pamalombe and the Portuguese boundary.

Mponda, the powerful chief holding the Shire where it leaves Lake Nyasa, and possessing a large tract of country along its western bank.

The Angoni chief Tshikusi, who dwells behind Mponda.

Tshingwalo-ngwalo and Masmara, Yao chiefs along the western bank of the upper Shire, half-brothers and lesser heirs of Mponda.

Liwonde, chief ruling an exceedingly rich tract of land along the east bank of the upper Shire.

Tshikusi, the great Angoni chieftain dominating all the hill country between the west bank of the Shire and the Portuguese frontier.

Kawinga, one of the most powerful of the Yao chiefs who dwells near the north-west corner of Lake Shirwa and who commands a great slave-route to the coast, and lastly

Tshikumba, who after being for ten years a roving bandit living on the plunder of the missionary caravans between Blantyre and the upper Shire, has at last settled down on Mount Mlanje to a steady career of slave-trading.[1]

Except for the two Angoni, all the chiefs mentioned are Yao, and three of them, Jalasi, Kawinga and Liwonde, were forbears of the chiefs in whose areas I made my study. The history of the Administration's activities of the next five years is almost

[1] *Papers relative to the Suppression of Slave Raiding in Nyasaland.* C. 6699 (1892). Commissioner Johnston to the Marquis of Salisbury, Nov. 24th, 1891.

2: Mitchell K-5 (1946-1949) 1954 F77 Yao F77

mainly a story of the subjugation of this lot of chiefs. Acting-Commissioner Sharp wrote in his annual report in 1897: "The Yaos . . . were the chief slave-raiders for the Arabs, and in consequence nearly all our expeditions for 1891 to 1895 were undertaken against various sections of this tribe."[1] The British South Africa Co. had made available a sum of £10,000 a year for providing a police force. As early as 1891, a raid was made on Cikumbu, a Yao slave-trader who had attacked a European coffee plantation in the Mlanje area. After this, there was a continual series of punitive expeditions against various native groups, usually after some slaving incident which precipitated British action. Captain Maguire was killed in 1892 by Makanjila's men, and shortly afterwards the British forces suffered a reverse at the hands of Jalasi. Unsuccessful attacks had been made on Kawinga's stronghold at Chikala. In 1893, two contingents, each of 100 Sikhs, arrived, and with this force more active measures were taken to control the slave-route to Quilimane through Mlanje district. In 1894, the Yao chief Makanjila was attacked and thoroughly defeated. In 1895, there was a concerted effort by the chiefs Kawinga, Jalasi and Matipwiri to oust the British from the Highlands. This commenced with an attack by Kawinga on the friendly chief Malemia, in Zomba area. A force was sent to protect the Missionaries at Domasi, and it stopped the main onslaught. After that, the stronghold of Chikala was scaled and Kawinga completely dislodged. He retreated to the east, and Matipwiri and his relative Mirimanje were captured. The power of these chiefs was completely broken and no more expeditions were necessary. In 1896, Kazili, a neighbour of Jalasi's, was captured and in the same year Liwonde, who had so far eluded capture, was apprehended and sent as a political prisoner to Chiromo in the extreme south of the Protectorate.

In the meantime the Portuguese were making similar punitive expeditions into the region due east of the Protectorate, and many refugees came into the Territory from Portuguese East Africa. Notable amongst these were the Mpondas groups under Chikweo and Ngokwe, who are to-day settled near Lake Chiuta.

In those parts of the Territory where military action was no longer necessary the framework of the Administrative system was

[1] *Annual Report*, 1896. C. 8438, p. 12.

2: Mitchell E-5 (1946-1949) 1956 FT7 Yao FT7

were erected. As early as 1895 the Protectorate was divided into Administrative divisions and Collectors were appointed in each. Coinage was issued; a hut tax of 5s. was introduced; European claims to land and mineral rights were settled with the chiefs—all large estates were issued with certificates of claim; and a postal system was initiated. The old order of independent chieftdoms had gone for good and the Africans had to adjust their way of living to a new order.

The Village as a Unit in Pre-White Times

Though there are earlier records of villages among related tribes, the earliest we have of the Yao are those of Livingstone.[1] In the records of his journeys up the Shire and the Rovuma Rivers, he states that the people lived in villages. Rowley's reports[2] of the Shire Highlands in 1861 show that the Nyanja were organized in villages similar to those of to-day, but the best reports on the Yao village are by Duff MacDonald, who worked as a missionary in the Shire Highlands and the Zomba area from 1878 to 1881. Duff MacDonald published both a general ethnographic account of the Yao around Blantyre and a journal of day-to-day events on the mission. From these descriptions we are able to reconstruct much of the political organization of Yao groups before the Whites came to Nyasaland. Though the information from these early accounts about the internal structure of villages is scant, the reports of the importance of domestic slavery are good, and this is valuable in assessing its effect on the internal structure of modern Yao villages.

From MacDonald's description it appears that each Yao chiefdom was a congeries of almost autonomous villages. The headmen of these villages recognized the superiority of one of their number whom we may call 'chief'. The unity of each village and its corporateness were expressed in many ways. One of these was in connection with the worship of ancestor spirits. MacDonald writes:

> [The village headman] is the recognized high priest who presents prayers and offerings on behalf of all that live in his village. . . . It

[1] Livingstone, D. and C., *Narrative of an Expedition to the Zambesi and its Tributaries, and of the Discovery of Lakes Shirwa and Nyassa. 1858-64*, John Murray (London, 1865). Waller, *Last Journals*.

[2] Rowley, *The Story of the Universities Mission*.

2: Mitchell E-5 (1946-1949) 1956 F77 Yao F77

175 622 is his relatives that are the village gods. Everyone that lives in the village recognizes these gods but if anyone removes to another village he changes his gods. He now recognizes the gods of his new chief. One wishing to pray to the god (or gods) of any village naturally desires to have his prayers presented through the village chief, because the latter is nearly related to the village god, and may be expected to be better listened to than a stranger.[1]

In this quotation the word 'chief' is used for village headman. In Yao the same term is used for both the *chief* of the country and the *chief* of the village (*mwenye*).

175 672 681 682 It is clear from MacDonald's description that foreign villages were looked upon as undifferentiated wholes. When discussing punishment in general he writes:

We find that almost every offence may be punished by death, but when an offender is not redeemed, the particular punishment is left to the headman of the injured party. For instance, if a headman of Kumpama's go and say, 'Chinyonso has killed a subject of mine; I have caught a subject of his and want to kill him,' the chief's answer will be, 'He has done you wrong, do according to your heart (*pali mtima wenu*).' The punishment is thus inflicted not by the criminal's own chief, but by the injured party, and it may fall, not on the guilty person, but 'on one connected with him.'[2]

For example, he describes how some children had been carried off from Che Lomoni's village one night in 1880.

Towards the end of 1880 [he recounts], Che Lomoni, a Blantyre headman, captured two men from Mpingwi, and put them in slave-sticks. They belonged to the village that had kidnapped the children a few months before, and native law did not require proof that the men were personally guilty. They were undoubtedly innocent. Still they were kept in close confinement till their friends returned the captives in February.[3]

175 622 The village headman—called the 'owner of the village' (*anyene mzi*)—was the representative of the village in all public transactions, and also the representative of such higher authority as existed, to the village members. Duff MacDonald writes: 'A chief represents and is responsible for all his people. If anyone wish to treat with a native village it is with the village

[1] MacDonald, *Africana*, i, 65.
[2] MacDonald, *Africana*, i, 186.
[3] MacDonald, *Africana*, ii, 234.

2: Mitchell E-5 (1946-1949) 1956 F77 Yao F77

chief that he must deal. If we give a present to a village it is to the village chief that we must give it'; and, 'It is when a man transgresses against his own village chief that *personal responsibility* is brought home to him. When he transgresses against another village, his own chief pays for him.'[1] The village headman accepted liability for offences committed by his villagers against members of other villages, but could punish his own villagers by fines and by putting them into slave-sticks. Within the village, according to MacDonald,

> The headman cannot make his villagers hoe his farm for him, or do such private work. Neither does he exact tribute from them. . . . Still he expects them not only to stand by him in war, but to support his government on all occasions, and to render special assistance in the trial of judicial cases. . . . He may pronounce a capital sentence, or order as large a penalty as the fine of four slaves—especially if he be a higher headman. But his judgements may be complained of by any of his free subjects (only such appeals are rare, unless by parties that want to leave his village altogether). His decision may be revised by some other headman, as the ruler of the village from which his own settlement broke off; but the ultimate appeal is to the chief of the country. While the village headman settles all smaller disputes without troubling the chief, he usually reports graver cases.[2]

The Chief and the Village Headmen: the Political Process

The village headmen in any particular area recognized the superiority of one of their number, the chief of the land (*anyone ntambo*). MacDonald classifies the headmen under one chief as follows:

1. Chief's blood relatives, usually called 'younger brother'.
2a. Settlers or refugees (*alamdi*) who have come over with a large following from a hostile chief.
2b. Men who have gained the chief's favour by their services and been sent to occupy new spots in the kingdom.

'Other village headmen arise when a large village increases and sends forth smaller hamlets.'[3] All in the territory of a chief were integrated by a chain of authority. As he explains,

> 1. Headmen are under higher headmen and under the chief.

[1] MacDonald, *Africana*, i, 186. Original italics.
[2] MacDonald, *Africana*, i, 153. [3] MacDonald, *Africana*, i, 156.

2: Mitchell E-5 (1946-1949) 1956 FTT Yao FTT

175 566 622 643

2. Free men are under their elder brother in the first instance, but they may carry their cases to the headman of their village or even to the chief of the country.
3. Slaves were entirely under their own master.[1]

The headmen's subservience to the chief is described in the following passage:

In all public transactions the headman represents his village. He receives the chief's orders and sees them carried out. When he kills an elephant he sends one of the tusks to the chief. Should he kill [651] twenty elephants he is not expected to give up twenty tusks—two or three would be sufficient. If he shoots a large buck he gives one haunch of venison. For all such tributes he expects to receive in return a present (generally a little powder). . . . He is expected to [646 943] attend the chief's parliaments unless he is under an elder brother in which case he is not allowed to speak, except when especially commissioned. Headmen are expected to report all cases of war, but they often attack enemies without telling their chief beforehand, saying, [721] 'Let him hear of the enterprise when it succeeds.' Yet this is dangerous unless they are sure of success, and well acquainted with the chief's private sentiments. On reporting an attack they present the chief with part of the booty. In times of war each headman when summoned, must follow his chief's flag, otherwise his village is burned [647] down, and all that fail to escape are killed or enslaved.[2]

175 578 622 643

Yet within the framework of this organization villages were markedly autonomous. MacDonald's description, which I have just quoted, brings this out very well. Elsewhere he writes: 'The chief may often have less influence than powerful headmen, and we have known cases where he simply contented himself with grumbling when his headmen acted contrary to his desire.'[3] The chief did not differ greatly from his more powerful headmen. A certain amount of ritual in terms of ancestor worship embellished his position, and he had some ascendancy over village headmen to whom he had given land. Yet, in the last analysis, the chief had to rely on his personal following and military power to subjugate headmen who were becoming too powerful. The chief was therefore in direct competition with his subject village headmen, and involved in a constant struggle with them for followers. MacDonald describes how the chief himself was a

[1] MacDonald, *Africana*, i, 155.
[2] MacDonald, *Africana*, i, 157.
[3] MacDonald, *Africana*, i, 155.

2: Mitchell E-5 (1946-1949) 1956 F27 Too F27

village headman and had to administer his dues and relatives in his village in the same way as a village headman.[1] MacDonald shrewdly observes:

> Where the chief was occasion to interfere with his subordinates he generally consults his own interest. He will say to a headman, 'I see that you have been behaving badly to that subject of yours. You cannot get on with him: he must leave you and come and dwell in my own village.' The chief thus secures another servant.[2]

Another writer observed, '*As a chief's power consists of the number of his subjects the loss of a man is a serious matter.*'[3]

A village headman also tried to strengthen his position against the chief and against other village headmen by attracting to himself as many followers and dependants as he could. The process whereby a man might increase his status is described as follows:

> However large the settlement may become, the man that is first in the field is the chief or headman. In course of time he adorns his position by acquiring wealth. He may shoot some buck and get possession of their skins. With these he goes to the Mangoni country and buys slaves. An old person he obtains for a single skin, but a young slave costs two, and women cost much more than men. The female slaves thus bought are his junior wives and he keeps them busy in hoeing the farm, and all such female duties. The male slaves he employs in farming, building, making baskets, sewing garments and such masculine pursuits. He keeps all these persons strictly at their duties, and at the same time welcomes an opportunity of selling them at a profit. If his daughters were unmarried, he would give them slave-husbands. The natives aim at 'replenishing the earth and subduing it'. As it is no expense for them to rear families, they are all desirous to have many children.

Besides this increase of the village from the chief's own resources, there may be an accession of freemen. After the settlement is begun, a man may come to its founder and say, 'I wish to live with you.' The village chief gives him permission and calls him 'younger brother'. The newcomer brings his family, builds a house, and cultivates a farm in the same way as his chief. A freeman may leave his present chief and take up his abode with another, whose subject he becomes. His former chief has no longer any authority over him

[1] MacDonald, *Africana*, i. 154. [2] MacDonald, *Africana*, i. 153-6.
[3] Hynde, R. S., 'Among the Machinga People', *The Scottish Geographical Magazine*, viii (1892), 656-63.

2: Mitchell E-5 (1946-1949) 1956 FT7 Yao FT7

175 622 691 695 whomever. But a man often decamps by night taking with him many down belonging to his fellow-citizens; he then goes to some influential chief who may be only too glad to give the fugitive ground and to establish him as a sub-chief. Women who thus leave are detained by their former chief, who welcomes every opportunity of shooting or capturing them.[1]

175 559 622 693 681 In this way village headmen, by increasing their following, increased their power against the chief. MacDonald records:

When a person has acquired several villages, he becomes a higher headman, intermediate between the chief and the owner of a single village. Each headman lives in the village he likes best, and leaves his 'headmen' to manage his other villages. But a headman of great ambition often places his 'headmen' all around him, decides their cases, and practically governs a small kingdom of his own. If he lives far from his chief, one might suppose that he was quite independent. When a quarrel arises between the chief of the country and an important headman, the latter may rebel, and found a new kingdom, thus depriving the old chief perhaps of one-third of the villages in his dominion.[2]

MacDonald cites the case of Mkanda of Chiradzulu, who was at first a headman of Kabtgama's but rebelled, and went to live on the southern side of the mountain.[3] He also observes that on the other hand, 'a headman may keep up his chief's authority in a district that the latter could not otherwise hold'.[4] Elsewhere he says:

In and around his own village the chief of the country is a terrible power, and his government is supported by the most prompt and severe punishments. But in distant parts of his dominions, where influential headmen live, he may be little known, although as a matter of theory he is supposed to settle all graver disputes even in remote villages.[5]

175 693 The history of the Yao chieftaincies in MacDonald's time, and as told to me by my informants, is that of constant division into independent chiefdoms. In the Zulu and Bemba polities a strong state structure included a pattern of civil war and the main-

[1] MacDonald, *Africana*, i, 147-8.
[2] MacDonald, *Africana*, i, 32.
[3] MacDonald, *Africana*, i, 157.
[4] MacDonald, *Africana*, i, 156-7.
[5] MacDonald, *Africana*, i, 154-5.

2: Mitchell E-5 (1946-1949) 1956 FT7 Yao FT7

sources of the whole state under a new king,[1] but the Yao political units seem to have split into two factions when divisions appeared within them. The dissident faction left the parent chiefdom and established itself somewhere else as an independent entity.

The picture my informants have given me substantiates MacDonald's account, though his contact was mainly with Mangoche and not with Machinga Yao. My informants, however, placed greater emphasis than he did upon the importance of trade with the coast. A slave-trading trip was not a venture which the ordinary village headman could undertake with equanimity. The journey to the coast, to Quilimane or to Kilwa, was long and arduous, and strong military protection against bandits was needed. A caravan could only be sent by a chief or someone of like status, so that the coastal trade became the monopoly of the chiefs. Headmen who had ivory and slaves to send to the coast included them in the chief's caravan. When it returned, the headmen were able to collect calico and beads to the value of their contribution. Gun-powder also seems to have been a chief's monopoly. Thus, in fact, he did have some physical control over the military activities of his subject village headmen, since he could withhold supplies of gun-powder if he wished. But in a society where minor chieftains were inimically poised against each other, the maxim 'a chief without people is nothing' had much more significance than it has to-day: a village headman's ultimate sanction was that he could withdraw his support from one chief and give it to another.

The Effects of Slave Conquest

It was into a society thus organized that the first Missionaries came. I have already described how the Missionaries, by taking in runaway slaves, and by occasional armed combat, entered into political relationships with the chiefs. With the establishment of the Protectorate, the policy, clearly expressed in Sir Harry Johnston's letter,[2] was to stamp out slavery. This was done in numerous campaigns against the Yao chiefs[3] so that by

[1] See Gluckman, M., 'Succession and Civil War among the Bemba: An Exercise in Anthropological Theory', *Human Problems*, xvi (1954), 6-25.
[2] See *ibid.*, p. 29.
[3] See Chap. II, pp. 29-30.

2: Mitchell E-5 (1946-1949) 1954 FTT Yao FTT

776
693
693

that the superior British militia had completely subjugated all the Yao chiefs who had resisted them.

British power initially became merely an element in the political relationships of chiefs: they used it against their rivals, as Kalembo used it against Cingwalungwalu,[1] or Malemia against Kawinga. Yao chiefs did not unite in the face of their common enemy.[2] As the campaign against the slave-traders progressed, however, Yao chief after chief fell to superior British arms. They, who only a few years earlier were accepting the submission of refugees, themselves had now to 'grasp the leg of the White people'.

It is clear that they looked upon their submission to the Whites in much the same way as they looked upon the submission of refugees to themselves. To submit to a man was to accept slave or near-slave status. According to informants, Kawinga sent a large tusk of ivory[3] to the British as a placatory gift. His ceremonial knife, and the knives of his important headmen, were taken from them by Robert Codrington, Assistant Collector of the northern part of Zomba.[4] A chief with whom I was once discussing slavery expressed neatly the attitude of the Yao chiefs to their subjugation. He said: 'There is no slavery to-day—we are the slaves of the Government'. The chiefs who returned to the Protectorate, therefore, returned as subjects, and were fully aware of this. In the new regime, the former chiefs had to recognize a superior authority and the British Administration provided the framework within which the old rivalries had to be replayed.

The chief's position in relation to his subjects as a result of this catastrophic change was, of necessity, weakened. When the slave caravans stopped, the chief's source of wealth disappeared, and with it much of his power. He was no longer much wealthier than his subjects. The wants of the people could now be more easily satisfied by the numerous trading stores which

[1] Mitchell, J. C., 'The Political Organization of the Yao of Southern Nyasaland', *African Studies*, viii, 3 (Sept. 1949), 141–59.

[2] Johnston maintains that Mataqwiri, Jalasi and Kawinga had planned a joint attack against the British in 1895. If this is so, the attempt was completely unsuccessful. See Johnston, H. H., *British Central Africa*, Methuen & Co. (London, 1897), 130. See p. 30.

[3] *The British Central African Gazette*, ii, 18 (Nov. 15th, 1895), reports that Kawinga sent in some ivory as 'indemnity' but was told to pay more and to send in 60 more guns.

[4] They are to-day in the Southern Rhodesia National Museum, Bulawayo.

2: Mitchell E-5 (1946-1949) 1956 FT7 Yao FT7

began to appear in the Territory. The chief in this situation had the same wants as his subjects but was in no way able to satisfy them. He was precluded by his position from becoming a labourer and thus securing a cash income, while his subjects, until recently dependent on his monopoly for their wealth, had been drawn into the new economy of the Protectorate and were comparatively affluent.

The cessation of warfare and slavery thus affected the prestige of the chiefs seriously. The Administration's policy was at first to impose a fine of guns on those who broke rules. In July 1894, for example, Chapola village on the south-west corner of Lake Malombe was fined 30 guns for being in possession of slaves.[1] Later the Administration introduced an ordinance requiring the registration and licensing of guns, and many guns were confiscated on account of breaches of this regulation. Not only were the Yao disarmed, but the Administration also punished those who broke the peace. At the same time the Government was pursuing an active policy against domestic slavery. For example, in the village of Chapola mentioned above, 26 slaves were released. The slaves, formerly bound to their masters by the physical sanction of being liable to death at his hands in cases of desertion, were now liberated. It is not surprising to find the Collector at Mlanje reporting, in 1895, that the power of Kosirimanja and Matipwiri was failing, and that they were losing people.[2]

Statements of informants confirm that slaves were then starting to leave their erstwhile masters to set up villages of their own. In 1904, the Administration reported: 'The tendency is for the old large communities to be broken up; for the small man to collect a surrounding of friends and go off and build new hamlets in other localities'.[3]

From my own investigations, there appear to have been two possible reasons for this. First, communities may formerly have lived in consolidated groups in order to protect themselves from slave-raiders and other assailants. With the disappearance of the slaver and of war, the bond of the need for security would,

[1] *B.C.A. Gazette*, i, 10 (July 28th, 1894).
[2] *B.C.A. Gazette*, ii, 8 (June 15th, 1895).
[3] *The Annual Report of the Territory, 1903–4*, quoted by S. S. Murray (ed.), *Handbook of Nyasaland*, Crown Agents for the Colonies (London, 1932), 188.

2: Mitchell E-5 (1946-1949) 1956 FFT Yao FFT

therefore, be weakened, and the component parts of the village scattered. This is what the Administration argued when it wrote about the split-up of communities: 'This tendency is to some extent gratifying, in that it originates in the native's sense of his complete security under the existing Government.'[1] I have not much evidence that this is true, and in fact do not think it is. Second, there is little doubt from my village histories that the slave-groups attached to various village headmen were deserting their former masters and setting up independent villages.

It is significant that the report speaks of the 'old large communities'. Duff MacDonald, writing of the Blantyre area in the period 1877-81, says: 'Usually the natives live in small villages containing 10 or 11 huts, occasionally in large villages containing three times as many. They do not like to pack themselves closely. In time of peace few villages contain more than 100 people.'[2] Hynde, writing of the Domasi area, says: 'Sometimes a village consists only of five or six huts; more commonly twelve or twenty and rarely above thirty. The chief's village at Domasi consists of more than 100 houses but that is an exceptional case. The villages occur at intervals of quarter to one mile.'[3] In July 1895, the Collector at South Nyasa made a census of all the villages on the west bank of the Shire (64 villages). These were mainly Yao, but also included some Nyanja. The modal size of villages, calculated from his published figures, is 26 huts.[4] The reports of MacDonald and Hynde agree well, although they describe different areas. The Collector's average was slightly larger, but one is not sure that he has not included two or three settlements under one headman. A village, Changali, was marked as having 217 huts, but a note indicated that they were scattered. Also the numerical accuracy is not above question because a large proportion of hut totals end in 0 or 5, indicating estimation rather than enumeration. From my own observation, the arithmetic mean of a sample of 37 villages in two separate areas was 11 huts (mode was 8 huts).

It seems, therefore, that the optimum size for Yao villages has always been about 10 to 15 huts, and that the disintegration

[1] *Annual Report of the Territory, 1911-12*, Murray, *Handbook*, 128.
[2] MacDonald, *Africana*, i, 145.
[3] Hynde, R. S., 'Among the Machinga People'.
[4] *B.C.A. Gazette*, ii, 3 (Sept. 1895).

2: Mitchell E-S (1946-1949) 1956 FTT Tao FTT

owed by the Administration in 1912 was in fact the break-up of larger communities under important village headmen. These communities were, as is evident from MacDonald's writings, largely made up of slaves and their descendants. In the light of the internal structure of modern villages, I believe that the fragmentation going on at that time was due to the breaking of the bond between capture and slave—a bond formally reinforced by physical sanctions that included the killing of a slave by his captor. Therefore, while the groups thus linked to the headman may have moved out of his village, his matrilineal kinsmen, who were bound to him by bonds of deep sentiment and religious beliefs, remained. The irredeemable 10 to 15 huts were therefore likely to have been those of the headman's own matrilineal kinsmen. When the Administration ascribed the continuing tendency all over the Protectorate to the splitting up of villages into small family groups[1] it was probably describing the splitting off of descendants of slave-wives to found villages of their own. While this process of readjustment was going on, the Administration stepped in with legislation designed to control what it considered to be unchecked social disorganization. The Administration spoke of the necessity to

> build up an organization to control the rising generation of natives who, finding themselves without the restraining influences to which their parents were accustomed, have of recent years evinced an inclination to emancipate themselves from the disciplinary responsibilities of village life and obedience to authority, and to adopt habits prejudicial to native family life.[2]

To accomplish this task the Government introduced the District Administration (Natives) Ordinance of 1912. This was the Ordinance about which the Administration wrote in 1913:

> Framed, as it has been, in accord with native ideas and practice, it is a measure which none the less avoids the defects of the archaic system of tribal rule and which has as its aims the gradual formation of a subsidiary local government by means of Sectional Councils of Headmen chosen as far as possible by natives themselves and presided over by the District Resident.[3]

---

[1] *Annual Report, 1911–12*, Murray, *Handbook*, 118.
[2] *Annual Report on the Protectorate for 1912–13*, Murray, *Handbook*, 119.
[3] Murray, *Handbook*, 129.

2: Mitchell E-5 (1946-1949) 1956 FT7 Yao FT7

Under this Ordinance, the Administration provided first of all for the formation of 'villages'. A Rule made under Section 3 of the Ordinance and published in Gazette Notice No. 113 of 1913, gave the Resident the power to concentrate the native population, where necessary, into organized villages of not less than 20 huts and to disallow the erection of isolated huts. 'In order to give effect to this policy the erection of new huts was to be confined to existing villages, and the occupants of isolated huts were to be instructed to remove, as opportunity offered, to an approved village.'[1]

The Ordinance then proceeded to create a line of authority from the District Resident to the villagers through Village Headmen and Principal Headmen. Districts in the charge of Residents were divided into Administrative Sections. A Principal Headman was put in charge of each. The Sections in turn were sub-divided into Village areas (groups of villages), each in the charge of a Village Headman.

Under the Ordinance, Principal Headmen and Village Headmen were given specific duties and responsibilities in their respective areas. The Principal Headman, for example, was:

> to be responsible for the good order of his Administrative Section, the maintenance of discipline, the reporting of crime and the apprehension of criminals, sanitation, the control of the movement of cattle, reporting outbreaks of epidemic disease, and for any other matters in the interest of law and order and the general welfare of the native community.[2]

The Principal Headman was also to 'secure the attendance at the Magistrate's court of natives whose presence was required in connection with deceased estates, remittances, government labour and so on, and to exert his influence to accelerate the payment of hut and poll taxes'. These duties in turn devolved upon Village Headmen—they were responsible for their smaller areas as the Principal Headmen were responsible for the larger.

Unfortunately we have no information about the way in which Principal and Village Headmen were chosen. Murray records that

> Residents were not necessarily to recommend those natives who had hitherto been recognized as Chiefs or Headmen. It was considered

[1] Murray, *Handbook*, 132.

[2] Murray, *Handbook*, 130.

2: Mitchell E-5 (1946-1949) 1956 FT7 Yao FT7

that in some cases the previous records or age of such persons would be found to be such as to preclude their selection to transact the responsible duties of Headmen under the Ordinance, and in such circumstances Residents were to consider the claims of other natives of good standing, intelligence and reputation residing in the section, who, having assisted the Resident in native administrative matters in the past, might be expected to carry out the duties efficiently, and who, at the same time, were known to enjoy the confidence of the natives with whose supervision they were entrusted.[1]

Elsewhere Murray writes, 'The system introduced by the Ordinance was in no way intended to revivify or perpetuate government by native chiefs. The position of Principal Headmen under the Ordinance was in no sense to be similar to the archaic one of the chief.'[2] Yet in the area in which I worked it was precisely the traditional chiefs who were made Principal Headmen—Jalasi, Mpambi, Kawinga, Liwonde and Malemia. In retrospect it is difficult to see how it could have been otherwise. Considering the sentiment attached to the chief in Yao society, it seems scarcely possible to conceive of leaders who 'enjoyed the confidence of the natives with whose supervision they were entrusted' who were not chiefs in the traditional sense.

In spite of its avowed intentions not to 'revivify or perpetuate government by native chiefs', the Administration proceeded to invest the traditional chiefs with its own power. 'Residents', Murray writes, 'were to indicate carefully by their attitude towards and dealings with Principal Headmen the fact that they were officially recognized as chiefs of their respective sections and that, as such, they were entitled to the respect and obedience of their people.'[3]

It would be wrong to imagine that the military actions at the end of the last century had completely destroyed chieftainship. Those who had resisted the Whites were driven out of British Territory but were allowed to return very soon afterwards. These chiefs then took up the threads of their life as best they could under the changed conditions. The degree to which the new Administration had become a force in Yao politics is illustrated by an entry in the District Book in Zomba. Kawinga III had died in August 1905, and the record reads: 'There were two

[1] Murray, *Handbook*, 131.
[2] Murray, *Handbook*, 130.
[3] Murray, *Handbook*, 130.

2: Mitchell E-5 (1946-1949) 1956 FT7 Yao FT7

175 622 643 648 claimants to the succession, Kumlomba and Chiwalo. Their claims were really very equal and His Majesty's Commissioner (April 1906) called in Kumlomba and the most important headmen and decided the succession by their vote.' District Books have many entries dating before 1912 showing that the Administration did not consider chiefs and village headmen insignificant.

The appointment of village headmen needed the approval of the Provincial Commissioner, but presumably the recommendation came from the District Resident. It is reasonable to suppose that the District Resident in turn had discussed appointments with the principal headmen. Whatever the mechanics of the appointment, however, the outcome was that most village headmen who held positions of prestige in the indigenous system of ranking became village headmen under the Ordinance.

The District Administration (Natives) Ordinance thus made official the unofficial relationship which had previously existed between the Administration and the chiefs and the village headmen. The traditional relationship of chief to village headman and village headman to villager, however, became suffused with a new significance. These relationships had become part and parcel of the extensive administrative organization of the British Empire.

The Modern Administrative Structure[1]

648 642 643 The Native Authority Ordinance of 1933 and the Native Court's Ordinance provide the legislative framework for the modern administrative system. Under Section 23(*a*) of the Native Authority Ordinance, the rules, orders, proclamations, notices and appointments made under the District Administration (Natives) Ordinance were not repealed. The duties which had so long been incumbent upon chiefs and village headmen, therefore, continued unaffected.

The chief, however, was set up at the centre of a bureaucracy and given autonomy in a number of directions. The Native Court's Ordinance gave him legal powers to inflict punishment on his subjects; the treasury under his authority could raise

[1] I have dealt in some detail with the position of the chief in the modern situation in my article 'Political Organization of the Yao of Southern Nyasaland'.

2: Mitchell E-5 (1946-1949) 1956 FT7 Yao FT7

claims to primacy, and by the ideology of the kinship system is equivalent in status. In Jalasi's area, once again, the indigenous status of the chieftaincy is shown by the Administrative recognition of Jalasi against Mkumba, who was a minor chief, and Namwera, who had come to 'ask land from Jalasi', and who had to give some slaves and some ivory for his chieftaincy rights in the area.

The relationships of Native Authorities to each other to-day are thus fixed partly by the Administrative structure, and partly by their historical backgrounds, and I have indicated that the structure the Administration imposed in the Yao areas was very largely determined by the indigenous structure which existed at that time.[1] The Administrative system to-day, therefore, supports the traditional structure.

The five chiefdoms with which this study is concerned stretch from Zomba in the south, almost to Fort Johnston to the north-east of the Shire River. These chiefdoms are Malemia in the north of Zomba district, whose area lies along the Malosa range of mountains north of Zomba as far as Mount Chaoni. Liwonde district stretches from Mount Chikala and Mount Chaoni in the south to Mount Msili in the north. This district contains the chiefdoms of Liwonde and Kawinga and the minor chieftains under them. In Fort Johnston district which stretches from the north of Mount Msili to Lake Nyasa are the chiefdoms of Jalasi, Nyambi, Katuli, Makanjila and an Nyanja chief Nankhumba. The chiefdoms of Jalasi and Nyambi abut those of Kawinga and Liwonde, and it is with these that we are mainly concerned.

Malemia, whose clan-name is *amwale*, was apparently the first of the Machinga chiefs to move into present-day Nyasaland from present-day Mozambique.[2] His group moved south-west past the north end of Lake Chiuta and settled for a while on Mount Msili. Malemia was closely followed by Nkata, from whom the Jalasi chieftaincy developed and whose clan-name was *ambewe*, and his 'father' Mkumba, who moved in westwards past the north end of Lake Chiuta into the Mangoche Highlands. Here, together with the help of Kawinga and Liwonde, they attacked the so-called Mangoche chiefs (Mlumbe, Chikowi, Kapeni,

[1] Chap. II.

[2] The history of this chieftaincy is set out more completely in 'An Outline of the Social Structure of Malemia Area'.

2: Mitchell E-5 (1946-1949) 1956 FT7 Yao FT7

631 Matipwiri, etc.), displaced them southwards and so established
643 chiefdoms of their own. Mkumba moved to the south and
175 Nkata set up a fortress on Mount Mangoche, from which vantage-point he resisted British conquest for many years. Kawinga and Liwonde, whose clan-name was also *ambewe*, had moved in with Nkata but continued across the Shire River to settle in the Kongwe Hills to the west of Lake Malombe. Later, Kawinga and Liwonde re-crossed the Shire and moved south-eastwards until they reached Mount Chikala. This in the meantime had been occupied by Malemia. Kawinga and Liwonde succeeded in dislodging Malemia who retired to the Malosa Range, where he is situated to-day. Liwonde then left the mountain to settle on the east shore of the Shire River.

631 The arrangement of these particular chiefdoms in Administra-
643 tive districts therefore reflects the social relationships among the chiefs. Between Malemia and the two *ambewe* chiefs, Kawinga and Liwonde, there is an uninhabited forest reserve and a mountain range. Liwonde and Kawinga who can trace their descent
[611] matrilineally from a common ancestress and who are to-day perpetual[1] brothers, together with their minor chiefs, share the Liwonde district. In spite of the opposition of these two chiefs which arises from their position as chiefs of independent chiefdoms, they sometimes meet and visit each other. Chiwalo, who from the Administrative point of view is under Kawinga, is in fact more closely related to Liwonde and has much more to do with him. But Chiwalo's headmen usually appeal to Kawinga, not Liwonde, in their difficulties. Within Kawinga's area at a funeral or an installation ceremony of an important headman in the northern areas, representatives of the nearby chieftaincies Ngokwe, Chikweo, Chiwalo and Kawinga will be present. In the south, the representatives of only Chamba, Mposa and Kawinga are likely to be present. Headmen, if they come from Liwonde's area, do so because of kinship connection and not because they are representatives of Liwonde.

The relationships of Jalasi and to some extent Nyambi, with Kawinga and Liwonde, are much more distant. Kawinga and Liwonde stand opposed to Jalasi in spite of the fact that Jalasi shares their clan-name. I have never known of Jalasi coming to visit Kawinga or Liwonde. Jalasi's area extends well down

[1] i.e. the offices are fixed perpetually in this relationship. See p. 122.

2: Mitchell E-5 (1946-1949) 1956 FT7 Yao FT7

643 him about the laws it intends to introduce which affect his people. The Administration transmits new Ordinances and Regulations to the chief and he must then relay them to the village headmen. When it advises the chief of a new law it thereby advises the people of his chiefdom.

The Origin of Villages in Modern Chiefdoms

195 621 We have thus far been looking at the chiefdom as an organization of villages united by their common interests in and association with one chief. But the villages that compose the chiefdom are not all equally closely integrated into the political structure. This is most clearly seen against the background of how the modern chiefdoms came into being.

175 621 563 By the time that the 1912 Ordinance was introduced the social composition of the chiefdoms had undergone some change from what it was before the White conquest. Before the White conquest the Yao chiefs had overcome the indigenous inhabitants of Southern Nyasaland. Some of these had been allowed to remain in the area as subjects. Others were enslaved. There were some Nguru, Nyanja and Mpotola village headmen who had come to seek the protection of the Yao chiefs.

175 621 166 During the conquest, the territory was thrown into confusion, and villages fled in abandon from their own into neighbouring chiefdoms both in Southern Nyasaland and Mozambique. When the Administration allowed the chiefs to return, most of the important village headmen and their followers returned with them. Kawinga, for example, was allowed to return, not to Mount Chikala but to the area immediately to the north of it. He brought back with him most of his important headmen who had fled with him to the country of the Mpotola chief Nkanyela, in Mozambique. Jalasi was allowed to return from Portuguese Territory in 1906,[1] not to his mountain fortress Mangoche, but to a smaller hill Sakalwe some miles to the east. He gathered round him a few of his important headmen.

When hostilities ceased, there was a certain amount of internal readjustment. Some villages which had fled to other chiefdoms in the Protectorate started to come back while others stayed behind. To-day there are villages here and there which had left their chiefdoms in the confusion and had then joined their present

[1] District Book, Fort Johnston.

2: Mitchell E-5 (1946-1949) 1956 FT7 Yao FT7

chiefs. Mpumbe's village, which in 1947 was about 2½ miles from Kawinga's court village Nanyumbu, was originally one of Jalasi's adherents. Mpumbe fled with many others when the British attacked Mangoche in 1896. He went to the place where Lake Amaramba spills into the Lujenda River in Portuguese East Africa. When things seemed more peaceful, Mpumbe did not return to Jalasi's area, but preferred to seek his son Ngongondo, who had fled with a section of the village to Kawinga's area. He found Ngongondo at approximately the present site of the village, and settled with him. Ngongondo later moved eastwards to his present home in the Liwonde area. Both village headmen have achieved a certain amount of prestige in their new chiefdoms. Mpumbe was once a court assessor of Kawinga, and now holds girls' initiation rights. They have lost all touch with their former chief and are most unlikely to return to him.

A considerable number of Kawinga's villages moved into Mposa's and Chamba's areas, when they returned to the Protectorate. Their descendants to-day say that they did so because the soil was better in those areas than in Kawinga's.

Shortly after the British expedition, i.e. between 1896 and 1900, the Portuguese Government launched a punitive campaign against the Africans along the Portuguese–Nyasaland boundary. Many thousands of refugees came pouring into the Protectorate. Most of these were Mpotola and Nguru. The great majority settled where they crossed the boundary, i.e. round Chiuta, and Ngokwe chiefdom arose from some of them. After the Portuguese campaigns ended many other migrants came into the area. All those I questioned gave Portuguese ill-treatment as the reason for their coming across.

During the first decade of the century the movement, as in the initial invasion, was predominantly south-westwards—from Lake Chiuta towards the Shire River and Highlands. Now, however, the movement is gradual. The first movement of a group may bring it just within the boundary. Then the next movement may take it to the south and west deeper into Nyasaland. Some of my village case histories show this. Table III sets out some movements within Kawinga–Liwonde area (except Chiwalo).[1] I asked about the place of origin of all the villages

[1] I use Kawinga–Liwonde area to include the chiefdoms Kawinga, Liwonde, Mposa, Chamba, Ngokwe, Chikweo and Chiwalo.

2: Mitchell E-5 (1946-1949) 1956 FT7 Yao FT7

TABLE III

MOVEMENT OF VILLAGES WITHIN KAWINGA–LIWONDE AREA

621
175
166

Losers: \ *Gainers:*	Ngokwe	Chikweo	Kawinga	Liwonde	Mposa	Chamba	Totals
Ngokwe .	—	—	7	2	—	—	9
Chikweo .	—	—	2	—	1	—	3
Kawinga .	—	—	—	27	1	20	48
Liwonde .	—	—	—	—	—	4	4
Mposa .	—	—	—	2	—	9	9
Chamba .	—	—	—	—	—	—	—
Totals .	—	—	—	2	—	—	73 2

Totals above the diagonal represent movements south-westwards. Totals below the diagonal represent movements north-eastwards.

extant in Kawinga's section, which had arrived since the White conquest. My enquiries about the headmen who are recognized by Government were easy, but for those who are not recognized I had to rely on the memories of my informants and I know that many were left out. I am not aware of any bias, but realize that wide generalization from the figures is not safe. A glance at Map II shows that Ngokwe area is the most north-easterly area and Chamba the most south-westerly. The others are intermediate. Of the 75 villages only two had moved counter to this direction, i.e. from Mposa to Liwonde in a north-westerly direction.

I have no measure of the number of villages which have moved entirely out of the Kawinga–Liwonde area, either to other parts of Nyasaland or back to Portuguese East Africa. I have never heard of a village's moving back to Portuguese East Africa, though I have heard of their moving westwards and southwards, and of a few moving northwards.

In Table IV, I set out the origin of villages which have arrived in Kawinga–Liwonde area since the White conquest, and which are still there. This table shows quite clearly, that by far the biggest influx into these areas has been from Portuguese East

2: Mitchell E-5 (1946-1949) 1956 FT7 Yao FT7

TABLE IV

ORIGIN OF VILLAGES WHICH HAVE ARRIVED IN THE KAWINGA-LIWONDE AREA SINCE THE WHITE CONQUEST AND ARE STILL THERE

Origin	Ngokwe	Chikweo	Kawinga	Liwonde	Mposa	Chimba	Total
Northern Areas:							
Fort Johnston . . .	—	—	—	6	—	1	7
Nyambi	—	3	—	1	1	2	7
Jalasi	1	—	10	6	1	3	21
Southern Areas:							
Malemia and Ntumanje	—	—	—	8	7	28	43
Zomba	—	—	—	4	7	4	15
South of Zomba . .	—	—	—	2	1	3	6
Other Nyasaland Areas:	—	—	—	3	—	2	5
Port. E. Africa . . .	13	76	111	37	6	30	273
Unrecorded	—	—	—	2	1	31	34
Total	14	79	121	69	24	104	411

Africa. We have no record of how many villages have been lost to the Southern or Northern area from Kawinga-Liwonde area, so that we cannot evaluate the significance of the gain of 64 villages from Southern areas, and of only 35 from the Northern areas. The density of population in Malemia's area is 268 per square mile, and the average density of the Shire Highlands is about 156·6. It may well be that there is now a movement out of the Shire Highlands into the less densely populated Liwonde-Kawinga area.

THE PRINCIPLE OF PRIMACY

Migration and invasion have been the keynote of Machinga histories: village headmen recount with pride how their ancestors moved into Nyasaland with their bands of slaves and followers. 'The East' is the traditional home of the Yao and even young men who have never been there proudly say, 'We come from the East'. This sentiment is reflected in the belief that the rains from the east are beneficial and give rise to good crops, while the rains from the west are detrimental and cause

3: Stannus D-5 (ca. 1912) 1922 FT7 Yao FT7

That these several sections of the Wayao differ in many respects may be seen by comparing the Amangoche of *Africana*[1] with the Amachinga of this article. I am not sufficiently conversant with the Amangoche to make a definite statement on this point but I am inclined to believe that after longer residence and wider knowledge, Macdonald would have found that some of his statements needed revision. Those whom he considered the "Yao proper" but whom I prefer to speak of as the Amangoche seem to have a considerable mixture of Anyanja, since their language contains many Chinyanja words and many of their customs are practically those of the Anyanja. I am of the opinion that the Amachinga may be regarded as more typical of the Wayao, and except when ambiguity might arise, I shall speak of them as the Yao.

The original home of this Bantu speaking people is uncertain; in historic times all the sections of the Wayao were originally grouped in that part of Portuguese East Africa around the hill called Chao, whence they probably derived their name, *Wa Chao* or *Wa Yao*. About the middle of the nineteenth century, as the result of inroads by neighboring tribes of Alolo from the southeast, and raids by the Makwangala, a branch of the Angoni of Zulu origin, from the northwest, disruption of the Yao people occurred, and the divisions mentioned above, moved toward Nyasaland. The Masaninga branch settled for the most part along the eastern shore of Lake Nyasa but a sub-section known as Tambala Yao reached the west side of the lake. The Machinga made a settlement near Lake Chiuta under a number of old chiefs, including Malemya (Nalutumbo), Kawinga, Chenkula, Kalimbuka, and Maole.

The descents of the Makwangwala again caused the Wayao to move on from Chiuta to Naminga on the Mikoko stream. Here Malemya suffered another defeat at the hands of the Angoni; many of his people were driven off and taken to the neighboring Anguru country where they were held in captivity for some time. Finally they were restored by the enterprise of one of Malemya's old men, Kulungala, who went alone to the Angoni, saying that he wished to live with them and with his own brethren. One day, he asked the Angoni if they would like to see their captives dance, and when they assented, he called the Yao together, and clapping his hands to keep time, he began to sing one of their dance songs. Gradually he gathered all the Yao into the village open space, dancing and singing; then, keeping to the same air, he told them why he had come, using their own language which the Angoni did not understand. "Malemya, our chief, remains at the Mikoko stream. It is not far off. We must all join him again. Now dance for joy. If anyone does not return there, it is his own fault." Then, a few at a time, the dancers left the crowd and stole away into the bush and, as night came on, they all made off and reached Malemya's camp in safety.

Malemya's people were again attacked by the Angoni, and on this occasion they defeated their enemies. The Angoni retreated and skirting Zomba mountain, reached the Shiré

[1] Macdonald, op. cit.

3: Stanmus D-5 (ca. 1912) 1922 FT7 Yao FT7

175 167 148 River at Mpimbi where they intended to settle. Here, an old chief, knowing that their presence would cause trouble, persuaded them by tales of many cattle far away on the other side of the river, to swim over, and there they remained.

Kawinga and Malemya, then, to avoid further raids from the north went down to the Upper Shiré River near Lake Pamalombe, Kawinga going to Mvera, while Malemya stayed on the east side of the river among the Anyanja, claiming friendship with them because they bore many of the same clan names. Later, Malemya moved up to the highlands about fifteen miles north of what is now Zomba, and Kawinga went to Chikala. Malemya was friendly with the Anyanja chief, Chenyani, who was of his clan, and was therefore able to buy from him for a red blanket all the country from the Likwenu stream to the Namadzi River, a district thirty to forty miles long. There his people settled. [131]

Kawinga was once again attacked by the Makwangwala from the north, but beat them back, after which they returned to the country whence they came — German East Africa near Lake Nyasa. The Angoni chief was killed in this battle, and the story goes that two Yao captives were told off to carry the eviscerated body back to the Angoni country for burial. As they were not provided with food for the journey, the two men began to eat the corpse. After several days, this was discovered; one of the men was killed but the other escaped to tell the tale. These were barbarous days, and the Yao relate that after raiding a village, the Angoni would leave a pot cooking on the fire with the body of a child in it, well covered with beans, so that when they had gone away with their booty and the villagers who had taken refuge in the forest returned hungry, they would start eating the beans and then come upon the body of the child, and having eaten of the juices of a human body, they would have committed a terrible sin. [726 266]

The immigration of the Amachinga into the country around Mangoche mountain caused the Amagoche Yao settled there to move. They passed into the Blantyre and Mlanje districts, and invaded the country of the Anyanja. The chief, Malemya, known as Nalutumbo died about 1880, and was succeeded by his nephew, a sister's son, according to the Yao custom. This nephew, Wandalama, then took the name of Malemya.

In consequence of this succession, there was considerable bad feeling between Wandalama and the other aspirant to the chieftaincy, his cousin, Kumtaja. The latter moved down to the plain below Zomba mountain to the south, where he gathered about him a band of friends and malcontents. Malemya decided to attack him and with this purpose, sent two messengers, Nkopiti [1] and Mapondela, asking Chikusi and his Angoni to come and do the job for him. Led by Nyamuka, Njeremoli, and Kabayi, the Angoni came from the Shiré River opposite Blantyre, via Matope. They attacked and routed Kumtaja who, owing to the thick country, managed to fall back with most of his people toward Lake Chilwa. Here he was received by his cousin, Chimombo, a son of Nalutumbo, and father of my interpreter, Chonga, who ruled among the Anyasa. Afterwards, he moved to Mpimbi on the Shiré where he built a stockaded village.

[1] Died July 14, 1914.

3: Stannus D-5 (ca. 1912) 1922 FT7 Yao FT7

After the defeat of Kumtaja, Chikusi and his Angoni routed Kumtumanja, a brother of Malemya, who had also been making a nuisance of himself. Kumtumanja, who suffered from a large hydrocoele, is supposed to have lost his balance on account of this impediment, and fallen into a stream where he had stopped to drink and to have been drowned. 175 167 648

The Angoni still burned for more warfare, and Malemya, fearing that with his work done, they might prove a nuisance to him, turned them on to the Amangoche Yao around Blantyre. Thither they set off on a raiding expedition and returned to their own country via Chiradzulu. This raid took place in 1884.

During the next few years, Kawinga, who had always held a grudge against Malemya for having got ahead of him to the best country, occupied the chief with raiding and warfare. In 189[illegible] Wandalama died, and was succeeded by Chisala, the son of his sister, Chisigure, and at the present time, he is the reigning Malemya.

It is of these Amachinga Yao under Malemya that the following notes are written. I have gone at some length into the history of these people in order to disarm criticism by those who, familiar with other sections of the Wayao, may not agree with all my statements.

Life History. Generally speaking, the life of the Yao native in the old days was full of ease spiced with the excitement of intertribal warfare. He cultivated his crops, kept a few goats and chickens, and relieved the monotony by hunting. Even domestic slavery was not a great hardship, nor did the Yao probably suffer from coast slave-raiding to the same extent as many other tribes. As children, they are wont to spend their days free from care, seldom reprimanded, and rarely or never physically chastised. During youth, the same easy lot is theirs, with the addition from time to time of a few small tasks; minor household duties for the girls, such as drawing water, sweeping the hut, and "minding" the baby, while the boys hoe or fetch and carry for their fathers in the village or in the bush. Left to their own devices, they play games,[1] dig out rats' nests, or shoot birds with bows and arrows. 181 857

Now, as formerly, when they are about five years old, the girls usually go to live with their grandmother who may thus have a number of children around her; or several girls of a somewhat more advanced age may sleep together in a hut dormitory. Boys of this age all live in a big hut called *nyumba ja chachanda*, "the boys' dormitory." This is their quarters until one by one they leave to get married. The girl, similarly, remains in the girls' dormitory or with her grandmother until she is taken in marriage.

Puberty. The first interruption of this placid life of youth is the onset of puberty or the first initiation ceremonies.[2] Formerly, these ceremonies took place after puberty but of late years, as is pointed out elsewhere, they are performed much earlier. 881

Child betrothal. Betrothal in childhood or before birth is not uncommon. A woman learning that some friend of hers is pregnant will arrange that if a girl is born, her son will marry the friend's daughter, or a man taking a fancy to a little girl will select her as his 584

[1] Vide infra, p. 267. [2] Vide infra, p. 246.

They do not form a representative sample though they were casually selected for study and are fairly well scattered in the district in which they are situated. 125

In all there were 762 men, women, and children normally resident in the hamlets. This represents about 1·2 per cent. of the total population of the area. By normally resident, I mean that these people are considered to be members of the hamlets, and if they were absent, were away on only short visits of, say, about a month. 162

I have thus counted polygynists as normal members of the hamlets, but have taken care to ensure that they were not included again if their second wives were in another hamlet of the groups studied. Men, women, and their children who had gone outside the area to seek work, for example, were not included. 125

The ages of all members of the population were estimated by relating the birth of the individual to some notable event, the date of which is known. In these hamlets it was always possible to find some old relative who could place the birth of younger people as occurring between notable events. After the two dates between which the birth occurred had been fixed, it was then possible to fix the date of birth more accurately by asking the older people to indicate the approximate size of the child at subsequent events, by picking out a suitably sized child in the village.

The following is the skeleton chronology used in this survey. 125 175

1870 Migration of Kawinga group from Kongwe Hill.
1881 First attack by the Makwangwara Angoni.
1884 Second attack by the Makwangwara Angoni.
1895 British attack on Mount Chikala, the stronghold of Kawinga.
1896 British attack on Mount Mangoche, the stronghold of Jalasi.
1905 Death of Kawinga of the Anthill.
1907 The departure of Mr. Hoare, Collector of Revenue, from the Chikala Station.
1908 Small-pox epidemic.
1915 Government regulations about the number of huts to a village (District Administration (Natives) Ordinance, 1912).
1914 Commencement of the First World War. This is a notable event because of the fighting in German East Africa, in which many Nyasaland African troops took part. Also many men were used as porters carrying war goods from the railhead to Fort Johnston on Lake Nyasa.
1918 End of First World War.
1919 Influenza epidemic.
1921 General famine. This is known locally as *sala sa Jim*, lit. 'the hunger of Jim'. Jim was an African Government clerk whose duty it was to dispense food to the starving populace.
1930 The coming of the famous *mchape* witchfinders. These people, trading on the beliefs of the population, induced practically the entire people to drink a potion to protect themselves from witchcraft. It is a most memorable event in the history of the area.[1]
1933 The introduction of Indirect Rule.
1940 The commencement of recruiting for the Second World War. The Liwonde district supplied a good proportion of men for the Army.
1946 End of the Second World War, i.e. the return of the soldiers.

The important thing about such a chronology is that the events should be deeply 121 125

[1] For details of this movement when it had penetrated to Northern Rhodesia, see A. I. Richards, 'A Modern Movement of Witchfinders', *Africa*, vol. viii (1935), pp. 448–61.

7: Hetherwick M-5 (ca.1900) 1902 FT7 Yao FT7

SOME ANIMISTIC BELIEFS AMONG THE YAOS OF BRITISH CENTRAL AFRICA.

By the Rev. Alexander Hetherwick, M.A., F.R.G.S., of the Blantyre Mission, British Central Africa.

175 The original home of the Yao tribe may be roughly described as the large and lofty plateau which lies to the east of Lake Nyasa, and is bounded by the Rivers Rovuma and Lujenda. Forty years ago, about the time that Livingstone first entered the country, they began to be pressed on the north by the Magwangwara, and on the east by the Makuwa tribes. These invasions caused them to move, some westward down to the shores of Laka Nyasa or the banks of the Upper [134] Shire River, and others southward to the Shire Highlands, Mount Zomba and the eastern slopes of Mount Mlanje. In every case they succeeded in either subjugating or expelling the original Maravi or Mang'anja inhabitants of these districts, and in no case have they lost their own independence.

175 Till about fifty or sixty years ago the Yaos were untouched by any external influences, and when at that time the Arab and coast trader from Kilwa and 177 Zanzibar began to treat and trade with them they appear to have been little affected by contact with these visitors. Only a few of the younger men aped at [797] following Mahommedan tenets, and these they only grafted on to their still cherished belief in the old faiths of their fathers. The Koran, or a few of its texts, was added to the many other charms they had already hung about their necks. The faith which the first missionaries found them in possession of when they entered the country twenty-five years ago may therefore be held to be the unadulterated creed of the tribe from time immemorial.

774 The foundation of the Yao religion is to be found in the *liaolu*, the soul, shade or spirit which every human being possesses, and which is the inspiring agent in his life. They profess to give no definite description of the nature or characteristics of this soul. In their minds however it is allied with the shadow, and would seem to bear to the body the relation which a picture has to the reality. Their word for a shadow is *chiwilili*, which is also the term that they use to denote a picture, and pictures they associate with the shades or shadows of the dead. I have known natives refuse to enter a room where pictures were hung on [123] the walls "because of the *masolu*, souls, which were in them." The photographic camera was at first an object of dread, and when it was turned upon a group of natives they scattered in all directions with shrieks of terror. "The European,"

III. THE ENTRY Of The Whites

175 797 648 The first settlements in Nyasaland were in the Shire Highlands where a Church of Scotland Mission was built in 1876. In 1878 the African Lakes Company was founded to take over the trading activities of the Mission. As the White population grew the necessity for some non-missionary organization to regulate the relationships between Africans and the growing body of White settlers, who now included planters and traders as well as missionaries, became more and more pressing. Eventually in 1883 a British Consul was appointed. In 1891 to meet the activities of the Portuguese, a Protectorate was established and the military measures that had been proceeding against the slave traders were now intensified.

175 648 The military police used by the British authorities had arms which the Yao could not withstand, and even the most successful of Yao military groups was soon destroyed. Breech-loading rifles outshot the Yao's muzzle-loading guns and cannon were also used by the British in some actions. The British had a force of Sikhs well-trained in military manoeuvres. Even the previously impregnable Mount Cikala, so long held by Kawinga and his forces, was successfully assaulted. The superior arms of the British left an indelible impression on the Yao who had long conducted successful military campaigns, and in due course these arms came to be identified with the force of the value system of the Whites. One of the more immediate results of the success of White armaments was that certain Yao chiefs seized the initiative and used the British forces as a tool in their own political machinations. The history of the rise of Kalembo, although his country is outside the area of study of this paper, is interesting in this respect. Before the Whites came Kalembo, younger brother of Msamala, who was the father of the notorious Mponda, was an insignificant character. Just before the

8:Mitchell E-5 (1946-1947) 1949
[P.1458] FT7 Yao FT7

III. The Entry OF THE WHITES

175 648 British started actively to pacify the country, the sons of Mponda were at war with each other and Cingwalungwalu was on the way to dominating the whole of the west of the Shire River bank above the Murchison falls. After the British had demonstrated their efficiency by a few attacks on some of Nkata's forces, Kalembo approached the British leader and complained of the war in his territory. The British forces accordingly attacked and destroyed Cingwalungwalu's forces thereby leaving the way open for Kalembo to establish himself under the British wing as an important chief of the west bank of Lake Malombe. Amongst the chieftancies studied in this paper there appeared to have been no direct use of the British military forces in internal politics.[1] The Whites in this way immediately became a factor in tribal political organization. First of all some chiefs endeavoured to use the military force of the Whites directly in their tribal politics. Later on as military actions came to an end the power of the Whites continued to be tapped by chiefs and other personalities in the political structure in order to manipulate the tribal political set-up to their own advantage. In the main the power of the British Administration though still an active agent in tribal politics is now present as an abstract and invisible but nonetheless potent force. How this is done to-day I hope to be able to show by an analysis of the interaction of chiefs, African civil servants and village headmen.

101 175 619 643 As a foundation to this view of Yao politics, the detailed history of the three chieftains Kawinga, Liwonde and Nyambi is illuminating. Kawinga, Liwonde and Nyambi all belong to the same division of the Yao tribe, i.e. Macinga. There are about nine such divisions but only four are to be found in Nyasaland. The Acisi live near the Portuguese East African border in the Fort Johnston area (Katuli's area) and the

8:Mitchell E-5 (1946-1947) 1949 FT7 Yao FT7

[P. 145C]

648
175

[1] There is some evidence that Mgosa the son of Lowanda may have helped the British forces to subdue a neighbouring chief, Cambia the son of Kawinga.

101 Amasininga in the Makanjila area of Fort Johns-
619 ton District, i.e. to the east of the south end of
the Lake near Fort Maguire. These two divisions
● 175 are insignificant when compared with the other
two divisions in Nyasaland. The third division
643 is the Mangoce Yao now settled around Blantyre,
while the last division, the Macinga, are settled
between Fort Johnston district and Zomba.
These divisions arose from a breaking up of the
Yao tribe which originally occupied the territory
between the Rovuma and Lujenda Rivers in what
is now Portuguese East Africa. These divisions
are not very significant to-day. Members of a
division recognize that they are more closely
related to each other than to the members of
another division, but this does not appear to
affect modern political life in any way.

619 The first Kawinga, Liwonde and Nkata[1]
all belonged to the Macinga division which had
175 settled near the tip of Lake Amaramba where it
empties into the Lujenda River. From this place
551 of origin, the groups associated with these early
643 leaders moved into Nyasaland. In addition to
belonging to the same division of the Yao tribe
the three leaders mentioned also had the same clan-
name, viz. *ambeme*.[2] The term that I have trans-
lated as clan-name is the Yao word *lukoryo*,
which may also be translated as "kind" or "sort".
Thus, if one asks a man the "kind" or "sort"
of Yao he is, his answer may refer to the major
divisions as above, i.e. Macinga or Mangoce
or it may refer to the clan-name. Clan-names are
inherited matrilineally, but holders of the same
name are unable to trace their descent from
a common ancestor. People with the same clan-
[582] names formerly did not marry but this prohibi-
tion has fallen away. For the commoners the
clan-name seems to have lost most of its signi-
ficance but it is carefully remembered in the royal
lines and lines in which the rank of a village head-
man is passed down.

643 The present Kawinga and the present Liwonde
551 can trace their descent matrilineally from a com-
175

643 551 175 [601]

mon ancestress. The first Kawinga and the first Liwonde were maternal brothers and to this day Kawinga and Liwonde call each other "brother". Nyambi however was a sister's son of an early leader Mkumba who was the father of Nkata, and their clan-name was *awilani*. Nkata therefore called Nyambi "father".[3] Nkata was the first to move into Nyasaland and Mkumba and Nyambi followed afterwards. Later the Nkata name was dropped and an Arabic name Zarafi, corrupted to Jalasi, was substituted. Hence the present Jalasi calls the present Nyambi "father". Kawinga and Liwonde both call Nyambi *alamu*, or brother-in-law, it is said because one of the early Nyambi's married a woman who bore the clan-name of *imbewe*.

643 175 648

The groups under Kawinga and Nkata entered Nyasaland and gradually expanded until Jalasi, as he became known, dominated the area around Mount Mangoce in the present Fort Johnston District, and Kawinga, safely ensconced on Mount Cikala, dominated most of the area north of this point. Jalasi, Kawinga and Liwonde were heavily defeated by British forces in 1895–6 and driven out of British Territory. Later on they were allowed to return after they had been ordered to surrender and effectively disarmed. When they had returned, the chiefs were virtually ignored and as far as can be ascertained the effect of the British government was to destroy the power of the chiefs and substitute the system of British administration for theirs. Nevertheless, it is apparent from entries in the District Book that even though it were not the official policy, the administrating officers considered it important that the chiefs should maintain some power. Thus when Kawinga III died in August 1905 the District Book records: "There were two claimants to the succession, Kumlomba and Chiwalo. Their claims were really very equal and H. M. Commissioner (April 1906) called in Kumlomba and the most important headmen and decided the succession by their vote." The

643 report goes on to say that the newly elected chief
175 Kumlombe "had been mad once and still has a weak looking face and is a weak man. He has
648 no real influence with his people and is ruled by his young men's advice. He means well but does not act on his own ideas sufficiently."[1] This comment shows that even though the Administration may have acted on this occasion for the preservation of peace, to the Yao it seemed to be approving their indigenous institution in appointing the successor. Informants say that when Kawinga IV died in 1913 his successor Chiwalo, who was the unsuccessful claimant of the report in the District Book, was able to succeed to the name against some Yao opposition, because of his influence with the administration.

As early as 1903, only seven years after the last military action was taken against a Yao group, the position of the defeated chiefs in the new political structure was being considered. Thus the Report of the Protectorate 1903–1904 reads: "A somewhat difficult question for consideration is the extent of power which should be allowed to native chiefs. Before British influence was established a chief had unlimited powers of life and death, and was able to keep his people in order. He did so not by kindness, but through fear. At the present day, when chiefs are not allowed to use any of their old methods, the people formerly subject to them often refuse to obey or to take any notice of their directions. The tendency is for the old large communities to be broken up: for the small man to collect a surrounding of friends and go off and build new hamlets in other localities. There are very few chiefs in British Central Africa who are of great assistance to the Magistrate so far as judicial work goes. There are, of course, notable exceptions, but as a rule it is not safe to give any power to native headmen."[2] I feel that the view of chieftainship expressed in this report is erroneous and that the chief was never as powerful over all his subjects as the 1903 administration assumed. Also the break-up of large communities,

643 I feel, was not due to a break-up of the chief's
175 power but rather to a breakdown of domestic
648 slavery and the system of sanctions that lay behind it, thereby freeing slaves who started setting up their own homesteads. It illustrates that the social system was fundamentally disturbed by the changes wrought by British domination as early as 1903.

643 This process continued until the Administration
622 saw fit in 1912 to introduce legislation to prevent
175 further splitting up of communities and to give a certain amount of power to "paid native local
648 authorities . . . who shall be responsible to the District Residents for the good order and administration of their villages or areas." [3] Hence with the passing of the District Administration (Natives) Ordinance 1912, the Administration began to recognize the indigenous political functionaries and to absorb them into the general political machinery of the Territory. In this Ordinance, village headmen were recognized as possessing a certain amount of power over the people who lived in their villages. Amongst the village headmen one was to be recognized as a Principal Village Headman. The Ordinance made it clear that the position of the Principal Village Headman was in no way to be regarded as similar to the old tribal position of chief. Though the Ordinance further warned that persons who were formerly chiefs were not necessarily to be appointed Principal Headmen, it should be noted that many Principal Headmen were in fact such people. Thus, in 1912, the leadership position of certain headmen in the Territory, though always recognized by the Africans themselves before that date, was further officially recognized and they were given specific powers by the British. "Residents were to indicate carefully by their attitude towards, and dealings with, Principal Headmen the fact that they were officially recognized as chiefs in their respective sections and that, as such, they were entitled to the respect and obedience of their people." [4] Nevertheless it was planned to have a structure

[text continues top of p.149A]

8:Mitchell E-5 (1946-1947) 1949 FT7 Yao FT7
[P.147 C]

643
175
648

[1] Recorded in the District Book at the District Commissioner's Office in Zomba.
[2] Annual Reports of the Territory 1903-4 quoted in S. S. Mkwaso, *Handbook of Nyasaland*, (London: 1932), p. 128. [3] S. S. Mkwaso (1932). [4] S. S. Mkwaso (1932), p. 130.

643 in which the District Commissioner would be
622 the real authority with the Principal Headmen
175 as his subordinates, to carry out certain well-
648 defined duties under his instructions. The Principal Headmen were expected to assist in the concentration of the huts in accordance with the new regulations concerning village headmen and the villages they controlled. Measures for the sanitation in the villages, sweeping and cleaning of villages, the construction of refuse-pits and latrines, were included in the Ordinance and the responsibility for this devolved upon the headmen. Village headmen were also expected to report crimes, abnormal illnesses and deaths, and so on. A clause specifically stated that no power to hear

[TEXT CONTINUES TOP OF P. 149B]

IV. THE PRESENT POSITION

643 In order to illustrate the structure of the political
175 divisions with which we are dealing, I shall
648 outline the make-up of the three districts under the Native Authorities Kawinga, Liwonde and
131 Nyambi (see accompanying map).

It will be recalled that Kawinga and Liwonde trace their descent from a single ancestress three generations back from the present Kawinga and five generations back from the present Liwonde. The groups under the leadership of these two brothers Liwonde I and Kawinga I, entered Nyasaland in the early part of the nineteenth century and after various campaigns in Mount Mangoche area migrated across the Shire River at Mvera and took up their position on Kangwa hill. Here the second Kawinga died. Shortly after this the groups were displaced by Ngoni raids and they recrossed the Shire River and moved southwards to displace another Yao chief, Malemia, from Mount Cikala (near Zomba), which stronghold Kawinga held until they were displaced by the British attacks in 1895. Liwonde at first occupied the neighbouring range Caoni but soon moved down to the Shire River. He too was displaced by British attacks and fled with Ka-

[TEXT CONTINUES MIDDLE OF P.149B]

643 and determine petty native cases was conferred
622 upon the headmen, though the District Commis-
175 sioner was supposed to seek their advice when
648 necessary.

Therefore, from the time of conquest a pattern of superordination of the Whites and subordination of the Africans was established and the indigenous political system remained largely without official recognition until the Native Authorities Ordinance was passed in 1933. The major change wrought by this Ordinance was that Native Courts were planned and instituted by the Native Courts Ordinance of the same year. At the same time a Native Treasury was founded.

IV. The Present POSITION

643 wings to Portuguese East Africa. They were
175 allowed to return later and they took up their
648 positions in an area roughly outlined in the early
131 part of this paper. At the same time, owing to military action by the Portuguese a certain number of refugees were crossing the border into the Lake Chuta area of Nyasaland.

TABLE I

Demographic Composition of Political Areas[1]

162
643
631
[563]

Sub. Area	*Tot. Pop.*	*Admin. Vills.*	*Av. Pop. of Admin. Vills.*	*Tribal Composition*			
				Yao %	Ngoni %	Nyanja %	Lomwe %
N.A. Kawinga (Yao)	23,087	311	74	51	37	10	2
S.N.A. Cambu (Yao)	5,119	61	84	72	20	7	1
S.N.A. Mpoza (Yao)	4,411	60	74	49	19	32	—
S.N.A. Chiwale (Yao)	2,202	19	116	80	15	5	—
S.N.A. Ngukwe (Mpotola)	2,868	21	136	16	43	40	1
S.N.A. Chikwere (Mpotola)	7,102	49	145	28	56	16	—
N.A. Liwonde (Yao)[2]	12,716	106	120	75	20	5	—
N.A. Nyambi (Yao)[2]	7,335	63[3]	116	73	27	—	—

9:Lawson Y-5 (ca. 1940)1949 FT? Yao FT?
MARAVI FRY
[P.180B]

Acknowledgments are due to many African friends who have freely given me information, and especially to Mr. Bennett Malekebu.

Y
M
101
131
M
[197]

THE present Bantu population of the Shiré Highlands in South Nyasaland consists of four major groups :

1. The Nyanja tribe, the country's earliest known inhabitants, whose language is closely allied to that of the Sena and Tete people on the Zambesi and the Senga on the Loangwa, but whose origin is uncertain. In 1858 Livingstone found various branches of this tribe settled throughout South Nyasaland.

Y
[175]

2. The Yao tribe, numbers of whom between 1860 and 1870 were driven southwards from their home in Portuguese East Africa by the neighbouring Amakua 'Walolo. These fugitive Yao fell upon the unwarlike Nyanja, conquered and subjugated their chiefs, and finally settling among them, intermarried to a certain extent.

3. A sprinkling of Ngoni, that branch of the Zulu whose flight from Chaka, wanderings in East Africa and ultimate settlement in Nyasaland and Portuguese East Africa, are familiar history. In the Shiré Highlands Ngoni are found only in small scattered groups, for their real home is the "Angoni Highlands" of central Nyasaland.

4. Recent immigrants from various tribes in Moçambique, given by Nyanja and Yao the indiscriminate name of "Lomwe", (i.e., possibly, "people from Lomwe Hill") or more rudely, "Nguru", (i.e. "people who speak indistinctly, like drunkards").

Y
[174]
[131]
101

This study was made in the district around Zomba and deals exclusively with the Nyanja and Yao TRIBES, WHO THERE PREDOMINATE

1: Tew E-4 (no date) 1950 FT7 Yao FT7

and £30 per annum. It is profitable to carry fresh fish inland by bicycle even as far as Blantyre,[1] as the shore price to the retailer is 4*s.* a load, which later may fetch from 16*s.* to 24*s.*[2] Yao on the south-west lake shore grow an excellent quality rice.[3] Rice is also grown near Lake Chilwa, but is mainly sold in the market organized near the lake shore by the Agricultural Department.

Division of Labour

The man builds the house, hunts, fishes, makes the nets, baskets, grain-store, game-traps, and, in the old days, the bark-cloth. He cultivates the tobacco. He cuts down the trees and may help with the hoeing and harvesting. The woman hoes, muds the floor of the hut, sweeps, cooks, brings firewood, draws water, brews beer, makes the pots and pipes.[4]

Land Usage

There are two types of garden in the Yao areas south of Lake Nyasa: one the ordinary garden in which the staples grow, and second, gardens along the stream beds. These latter are especially valuable for providing out-of-season crops. In addition most householders have a few small plots for tobacco and ground-nuts.

The main garden is cultivated by the slash-and-burn method, common in Central Africa. The Yao, unlike the Bemba, garden occupies the whole area cleared. Burning is done just before the rainy season (October–November). The ash and soil are hoed into elongated mounds and grain is planted along the ridges. Gardens may be cultivated for more than five years. In the second and subsequent years of cultivation the stalks and weeds are piled up and burnt. There are signs of soil impoverishment. The gardens are cleared in August, and heaped to dry for burning. After the burning the seeds are planted in late November. By February and March green maize is available to supplement the diet, and by the end of April the crops are ready to be harvested. The maize is stored in wicker containers, while sorghum is stored in the huts on a stand. Cassava is planted in large mounds made by turning the turfs over, so that the roots are outside the mound and the vegetable matter inside. Legumes are planted in smaller gardens, or interplanted with the main crop. Ground-nuts are stored, after being shelled, in mud-plastered wicker containers, designed to be rat-proof. Tobacco is planted at the sides of the streams for hand-watering in the seedling stage, and then transplanted about January. The leaves are ready to be plucked about April and soon afterwards they are marketed. Sweet potatoes are planted in the rainy season, and are ready for eating in May. The stream gardens yield out-of-season crops—maize, beans, pumpkins, and also sugar-cane, which is used in the initiation ceremonies.

Craftsmanship

The Yao have few skills. All cultivation is by hoe; axes and knives are their only other technological equipment. The men make mats from reeds and palm leaf, and the women make pottery. The huts are strongly built from poles laced with bamboo and plastered with mud. The roof is thatched with grass. Under Arab influence the

[1] *Census of Native Population*, 1931, p. 26.
[2] Codrington, 1898, p. 517.
[3] Stannus, c. 1902, p. 256; Macdonald, 1882, vol. i, p. 137.
[4] Aplin, 1931, p. 19.

1: Tew E-4 (no date) 1950 FT7 Yao FT7

Yao make square houses.[1] Panelled doors and glass windows, deck-chairs and palm furniture are becoming more and more popular. The men wear long Moslem robes and the women are clothed in cotton. In the rural areas there are usually a few craftsmen who still ply their trades as carpenters and blacksmiths, though the latter no longer smelt, but use scrap-iron.

Labour Migration

Statistics are not available for the Yao of Portuguese East Africa or Tanganyika Territory. Yao constitute 34 per cent. of the total population of South Nyasa district, 15 per cent. of upper Shire, 11 per cent. of Blantyre and Zomba.[2] The proportion of labour migrants in these districts was in 1937 as follows:[3]

District	*Adult males fit to work*	*Percentage of emigrants*	*Number producing economic crops*	*Number of subsistence producers*	*Emigrants not heard of since 1930*
South Nyasa .	24,230	27·1	2,912 (12%)	12,025 (49%)	873
Upper Shire .	14,673	15·9	2,555 (10%)	16,629 (67%)	233
Blantyre . .	25,330	15·6	3,788 (15%)	10,165 (40%)	986
Zomba . .	16,679	12·4	7,720 (29%)	9,040 (33%)	553

South Nyasa district, which is unfertile waterless bush with a long history of famine and food shortage, has the highest proportion of labour migrants. Upper Shire, though not fertile, is more prosperous, benefiting from the tobacco- and cotton-growing industries, and from the dried-fish trade.[4]

SOCIAL ORGANIZATION AND POLITICAL STRUCTURE[5]

Kinship and Local Grouping

Among the Yao succession is matrilineal and marriage mainly matrilocal. According to some informants succession formerly passed down the line of brothers, as with the Bemba, but it now passes direct to the eldest sister's eldest son, or to descendants of other sisters in order of seniority.[6] Chiefly succession follows the same rule, but the most senior may be set aside for a more suitable candidate.[7]

Clan names, *lukoyo*, are inherited matrilineally, and formerly designated exogamous units,[8] but the marriage prohibition has now ceased to operate. Holders of the same clan name are unable to trace descent from a common ancestress, and for commoners clan names seem to have quite lost their significance; they are, however, carefully remembered in the chiefly lines and in other lines of hereditary rank, such as village headmen.

Within the general kinship grouping of the clan, a smaller group is recognized,

[1] Werner, 1906, p. 144; Macdonald, 1882, vol. i, pp. 20–2, describes a round hut.

[2] 1931 Census information is taken because the district boundaries were changed between 1931 and 1945, so that the information in the 1945 Census would not be susceptible of comparison with that given in the 1937 Survey of Male Adult Population in the *Bell Report*, Appendix A.

[3] *Bell Report*, 1938, Appendix A.

[4] Smith, 1937.

[5] Information, unless otherwise stated, is from Mitchell, and relates to south Nyasaland Yao.

[6] Johnston, 1897, p. 471; Meredith Sanderson, 1920, p. 370. Cf. Macdonald, 1882, vol. i, p. 187, who says that brothers inherit before sister's son.

[7] Ibid., p. 189.

[8] Stannus, 4, 1922, p. 236.

1: Tew E-4 (no date) 1950 FT7 Yao FT7

expressed also in the speeches by the marriage sureties. The couple are exhorted to refer disputes to the sureties, and to consult the diviner in case of sickness.[1] After the rite these two sureties have special responsibilities towards the couple; grievances are referred to them, and they must be present when adultery cases are heard in court. If the marriage witness ceremony has not been performed, the relationship is not regarded as legal and no adultery compensation can be claimed by the husband. 585

Divorce used to be a private affair, which was merely signalized by one party giving to the other an arrow as a token of separation.[2] Nowadays all divorce cases go to court. The woman is usually asked to choose between her husband and the adulterer, and the compensation paid to the former, if she decides to leave him, is higher—amounting to about 10s. A man can be sent away from the village by his wife's kin, but if he has given no grounds for divorce he can claim compensation and will also take back any gifts made to his wife. A few small gifts to his mother-in-law are not reclaimed. Divorces are easily obtained and frequent. Grounds for the divorce of a man may include failure to pay hut tax, one of the specific duties of the husband. 586 [431]

The custom of making a marriage payment is recorded by Johnson[3] (on the east coast of Lake Nyasa) as a relatively new adoption. When given it is divided between the bride's father, mother, and mother's brother and brother.[4] 583 177

Slavery

Domestic slavery was an important institution in the Yao social system. Slaves were obtained by capture, purchase, or in compensation for injury.[5] A man would pay a debt by giving slaves (wives or members of his matrilineal kin group) to his creditors.[6] A man might voluntarily enslave himself to a man having charge of many women, as a means of obtaining a wife.[7] The children of a free man and a slave woman were not emancipated, as their father could not take them from the village of their mother's master, who had the right to sell them.[8] Slaves took part in the ordinary life of the village; women slaves ranked as junior wives of their masters and shared the usual work of women. Men might be supplied with guns for hunting or might accompany their masters to war, trade for them, spin, weave, sew, make baskets.[9] The institution of domestic slavery was an expression of a dominant motif in Yao culture—the association of status with a large number of dependents. Its abolition by the British was in itself a major blow to the prestige and authority of the chiefs. 567 [554]

Information about the social organization of the Yao in Portuguese East Africa is scanty, but it is in agreement with what is known of the Nyasaland Yao; Heckel, who knew the Yao in Lindi district, Tanganyika Territory, confirms the correctness of Stannus's account of the South Nyasa Yao. 184 602

The Yao came into Nyasaland in small parties of kinsmen. Their experience and their superior weapons soon enabled them to dominate the Nyanja among whom they settled, and today they dominate the population of the Southern Province. They are organized into loose groups of villages, under petty, independent chiefs. They seem 175 [621] [631]

[1] Stannus, 4, 1922, p. 245; Hynde, 1895; Johnson, 5, 1922, pp. 69–73; Macdonald, 1882, vol. i; Werner, 1906, pp. 129–32.
[2] Werner, 1906, pp. 152–3; Stannus, 4, 1922, p. 237.
[3] 1922, pp. 72–3.
[4] Stigand, 1909, p. 122 (not a reliable source).
[5] Stannus, 4, 1922, p. 280.
[6] Macdonald, 1882, vol. i, pp. 166–7.
[7] Ibid.
[8] Stannus, 4, 1922, p. 280.
[9] Werner, 1906, p. 273.

return to the *lupanda*, where the initiates are welcomed by their friends. An essential part of the ceremony which takes place at this stage is the exhibition of animal shapes made by the *m'micira*, with mounds of earth outlined in flour. These animal shapes differ from lodge to lodge. On the last night before the return to the village the initiates undergo a ceremonial bathing, each boy being carried to the stream by a woman, who thereafter is addressed as 'elder sister'. Finally, with new names, and freshly oiled and decorated, they march to the chief's village to be redeemed by him from the *m'micira* with gifts of cloth. After initiation it is a deadly insult to call a boy by his child-name. All who pass through initiation together consider themselves bound by mutual obligations of hospitality.[1]

Girls' initiation takes place in three stages. First, there is *ciputu*, the general initiation before puberty, which corresponds to the boys' *lupanda*. It takes place at the same time of year, and though it lasts for less than a week, its conclusion is celebrated at *lupanda* jointly with the conclusion of the boys' initiation. A hut is built in the bush, like the long dormitory of the boys, and four days are spent in dancing and singing. Each girl (aged about eight years) is accompanied by a sponsor, a woman friend who continues to be her mentor during subsequent rites, and who assists in giving the girl instruction in her womanly duties. At the end the girls are bathed and anointed, dressed in new clothes, and each is carried to *lupanda* by her sponsor. Here they prove their skill in dancing and receive gifts from their friends. Ritual defloration follows the *ciputu* initiation.[2] Among Mohammedans, clitoridectomy used to be performed by a woman operator, but, it is said, was discontinued in about 1903 on account of the heavy mortality.[3]

After this first general celebration, first pregnancy and first birth are the occasions of separate rites for each girl. According to some informants there were once two ceremonies connected with pregnancy. One, for the young married men whose wives had not yet conceived, used to take place at the same time as *ciputu*; each man was attended by a woman sponsor not his wife, given good advice, and put through various tests of manhood. Mitchell does not confirm the present existence of this ceremony, but in the old days if a man was betrothed or married to a child going through her *ciputu* he had to accompany her.

The *litiwo* ceremony takes place when a young married woman quickens with child for the first time.[4] The woman, with her sponsor and the married women of the neighbourhood, went out in procession for a ceremony of singing and dancing and instruction to the young couple, followed by a feast. Nowadays no men are allowed to attend *litiwo*. A child born of a woman who had not undergone this rite used to be buried alive; nowadays her *ayene mbumba* is charged by the chief.

Finally, six days after the first child is born, its naming ceremony forms a last initiation rite for its mother. The husband is formally led into her hut by her sponsor and the married women of the neighbourhood, and the child is taken out for the first time to the accompaniment of feasting and dancing.

Most Yao men and women act as sponsors of initiates at least once, and all parti-

[1] Sources for boys' initiation: Stannus and Davey, 1913; Werner, 1906, pp. 124–6; Stannus, 4, 1922, pp. 247–63; Hechel, 1935, pp. 19 sq.; Johnston, 1897, p. 409; Weule, 1, 1909, p. 304.

[2] Stannus, 4, 1922, p. 234.

[3] Ibid., 1, 1910, p. 296.

[4] Ibid., 4, 1922, p. 274; Hechel, 1935, p. 23, calls it *cinumbu* (belly).

1: Tew E-4 (no date) 1950 FT7 Yao FT7

cipate yearly in the great initiation festival for boys and girls. Consequently as they repeat each year the lessons of their own initiation, the ceremonies are the main vehicle of Yao culture.[1] 881 852

There are also two Moslem ceremonies:

(1) *Jandu*, the boys' Moslem baptism, which takes about seven days, and is usually worked in with *lupanda*: 881 852

(2) *Nsondo*, the girls' Moslem baptism, which is the same as *jandu*, 177

but usually quite separate from *ciputu*. It is important that the wife of a Moslem should have her *nsondo* so that she knows how to prepare the food properly at Ramadan.

Menstrual and Other Taboos

Menstruation is held to be dangerous. A special mat is used by the woman during this time, and is rolled up and kept during the rest of the cycle. The hut is completely replastered after menstruation. Intercourse during menses leads to disease of the man. 841 834 Sexual contact is dangerous to persons at certain other periods: during initiation ceremonies, during mourning, and for babies who have not been through the protective rite. The danger is thought to lie in *ndaka*, a dread disease characterized by swelling. This may be transmitted by salt in the food. Deaths are often attributed to 'salt'. Much of the significance of the mourning is that medicines are prepared which protect the mourners against the dangers attendant on sexual activity.

Burial Rites

News of a death must be sent to the chief by a messenger carrying a single fowl. 764 The chief gives a present of calico for wrapping the body, and a goat for the burial [203] men. These are called *awilo*, neighbours unrelated to the dead, who volunteer for [431] certain duties. They prepare the body for burial and carry it in procession to the graveyard outside the village. No uninitiated person is allowed to see the funeral. All who attend the burial are prohibited from sexual intercourse for one month. After this time the prohibition is lifted by a ceremony of beer drinking and feasting, and on the following day all fires in the village are extinguished, and then relit; and the mourners are shaved. A year later beer is brewed for a final ceremony.

For a period after her husband's death a widow is unclean, and has to be purified 768 by ritual intercourse with a man who is paid. The widow is not allowed to remarry 589 for two or three years. A widower leaves his wife's village, after receiving a parting gift. The widows of ordinary persons are not inherited. If a man has himself a 'name' [587] (rank and social position), he has an heir, who inherits also the wives of his predecessor. But if the heir (the maternal nephew) has married a cross-cousin (mother's brother's daughter) he would not consider the wife's mother as his inherited wife.

Before the burial the dead man's hut used to be destroyed, together with his possessions. Immediately afterwards a consultation is held as to whether retaliatory 764 action against sorcerers is called for. The *awilo*'s duties include not only the conducting of the burial, but also the subsequent inquiry and the conduct of the second 767 ceremony, the beer drinking, at which they shave the mourners. A man who has

[1] Main sources for girls' initiation: Heckel, 1935, p. 19; Stannus, 1, 1910, pp. 184–7; 4, 1922, pp. 269–74; Stannus and Davey, 1913; Duff, 1903, pp. 312–15; Abdullah, 1919, pp. 16–17; Macdonald, 1882, vol. i, pp. 125–30; Werner, 1906, pp. 126–7; Johnston, 1897, p. 410.

2: Mitchell E-5 (1946-1949) 1956 FT7 Yao FT7

436 calico currency was an impossibility.'[1] The Africans could hardly have resisted the change over to a money economy. The taxation system introduced in 1893 was based on the Governor of
436 Zululand's Proclamation III of 1887, and ruled that a tax defaulter
651 was liable to be conscripted for labour until he had earned the
687 amount of his tax. Coffee estates owned by Whites in the Highlands were at the same time in need of labour.[2] Tax was then taken in kind but it was soon changed to cash as a further inducement to Africans to come on to the labour market. The Africans were forced into the cash economy of the Protectorate even if they were unwilling. The measures were so successful that in 1899 the *Gazette* announced that the labour market in Blantyre was flooded.[3]

Modern Economic Structure

● 177 In modern Nyasaland, the wants of the Africans have become
511 even more varied than they were in the earlier days. Most younger men wear European-type clothing and shoes. Many own bicycles and sewing machines. Many houses have glass windows and panelled doors and most of them are furnished with some rough furniture which has been bought from local craftsmen. Many have beds and mosquito nets. Few women cannot boast of enamel dishes to replace their clay pottery or china cups to replace drinking gourds. The food habits of the peoples too have broadened. Most households use sugar these days, and many people drink tea. I should say that all households occasionally buy soap. Certainly all need salt, which formerly was burnt from the saline grass around Lake Shirwa or dissolved out of special soils in Portuguese East Africa. The stock-lists of an Indian-owned village shop in Chiwalo's area and of an African-owned canteen in the same area, which I have set out in Appendix A, indicate the range of the wants of the modern African.
434 It is clear that these wants are over and above food require-
463 ments. The people in these tribal areas live primarily on the

[1] *Report of the Consul and Acting Commissioner Sharpe on the Trade and General Condition of the British Central African Protectorate for April 1896 to March 1897.* C. 8438.

[2] See the *B.C.A. Gazette*, iii, 5 (March 1895), and iii, 17 (Sept. 15th, 1896), which print advertisements offering 'native labour arranged for and supplied to plantations at a commission of 7*s.* 6*d.* a head'.

[3] *B.C.A. Gazette*, vi, 6 (June 24th, 1899).

3:Stannus D-5 (ca. 1912) 1922 FT7 Yao FT7

845 one of Malenga's men died, after giving birth to quintuplets, some thirty years ago. Deformed children are buried alive. A large number of children is always hoped for and where polygamy is practised, some families are of considerable size, although the mortality [165] among young children is very high. It is, of course, very difficult to state the child-bearing period among natives. It does not start so early as is commonly supposed, and I think the menopause is found within about the same limits as among Europeans.

Death. Natives of Nyasaland live to a good old age. That such is not the case I have 761 found to be one of the many fallacious beliefs concerning natives which should be relegated 165 to the realm of exploded theories, as I have pointed out elsewhere.[1]

Death in old age is recognised as a natural event but apart from this, all sickness and death were formerly and are still to a large extent looked upon as the result of the machinations of some person, an idea which forms the outstanding feature in their belief in witch- [754] craft, *uawi*.[2]

Here I shall mention the ordinary customs in the case of death. During the last hours 763 of a mortal illness, a man is tended by his wife or wives; the head wife sits constantly supporting his head on her lap or against her breast. A woman is similarly tended by her mother, sisters, and friends. As unconsciousness sets in and the extremities become cold, they say, "His spirit has gone and only the heart remains alive."

The native does not like the idea of lingering on and a man on his death-bed will say to his sons, "Now watch me that I die quickly." He may take medicine to help him over that time or he may give his sons instructions as to what to do. Should a man linger unconscious for a long time, friends will ask his sons, "Did he give you any instructions?" If he has done so, the sons will then carry them out. This perhaps consists of bathing themselves in medicines left by their father, while they stand on the roof of his house. Sometimes, the natives say of a lingering case, "Ah, perhaps he has eaten of a tortoise's heart!" [825] knowing the phenomenon of the tortoise's heart and believing that by partaking of it, the same property can be conferred on the heart of a man.

764 When death is manifest, the body is covered with a cloth by a brother, a son, or some other person in attendance. The eyes are closed, the mouth shut, and at the present time, [177] the body straightened out. This, however, is a recent practice copied from the Anyanja, Europeans, and Mohammedans.

764 News of the death must be sent to the chief, and a messenger goes to his village where the chief and his people sit in the village open space. He carries a fowl in his hand. The 203 present of a single fowl always denotes bad tidings. One of the chief's men, seeing the stranger approach with the single fowl, will jump up and take the bird. He is joined by the others and they go away to the cross-roads where they kill the fowl, pluck it, cook it and eat it. In the meantime, the messenger delivers his news to the chief who will produce from his house about eight yards of white calico; if the deceased has been a much respected

[1] Hugh S. Stannus, 'The life-span of negroes', (*Lancet*, April 11, 1914, p. 1052). [2] Vide infra, p. 268.

3: Stannus D-5 (ca. 1912) 1922 FT7 Yao FT7

code of morals is imparted which is far reaching for the social welfare. Macdonald makes the statement that "when a girl is initiated, she must find some man to be with her on her return; otherwise she will die."[1] Speaking with reserve as to what happened among the Amangoche around Blantyre Mission thirty years ago, I believe that no such practice is or was part of the Machinga Yao ceremonies. I have heard similar stories from other Europeans but I am inclined to discredit the whole idea as a practice among any section of Yao. Of the Anyanja, I cannot speak with the same conviction. Similarly I believe that the practice of artificial dilatation of the vagina is foreign to the Yao though possibly introduced in some places from the Swahili. 881 177 832

At *Lupanda* and *Chiputu*, the youth have to undergo a good deal of hardship which is all for their benefit, but year by year, as civilization progresses, greater numbers forego these ceremonies. Their manners and morals suffer in consequence, and one is forced to acknowledge with the "old people" that the younger generation, decked in European clothes, with an air of smug self-conceit, no longer shows that decorum and self-respect which characterise the older, unsophisticated natives. My experience with regard to the attitude of natives to their initiation ceremonies differs from those related in *Africana* and I am afraid that Macdonald's native friends[2] were laughing at the inquisitiveness of the white man and not at their own experience. 881 177

In the *Journal of the Royal Anthropological Institute* for 1913,[3] Dr. Davey and I gave a short account of part of the ceremony at *Lupanda*. Since then, through the friendliness of some of the chiefs in Zomba district, I have been present at several more ceremonies. I have collected a number of fresh observations and made a complete set of sketches of the *inyago* or images in relief made on the ground at one of these ceremonies. I have also a complete account of the boys' ceremonies from a celebrated master of ceremonies or *m'wichila* as he is called, named Mlemala (Kumpika) of Che-chamba, in his own words, with his own songs. In writing down the songs, I have simply recorded the words, without giving the many full and partial repeats, and I have never attempted to score down the airs to which they are sung. 881 124

In the account given below I shall follow Mlemala's practice, giving such variations as I myself have observed. It will be understood that each *m'wichila* has his own way of doing things so that there may be many variations in detail.

Lupanda: Every year, a certain number of boys in a group of villages reach the age at which the ceremony is commonly performed. In response to requests made by the village headmen, the chief appoints a date on which the *unyago* shall be held; this is usually towards the end of the dry season (September) but before the long grass of the bush has been burnt, as this affords the necessary privacy to those taking part. 881

[1] Op. cit., vol. 2, p. 126. [2] Ibid., p. 130.

[3] H. S. Stannus and J. B. Davey, 'The initiation ceremony for boys among the Yao of Nyasaland', (Jour. Anth. Inst., London, 1913, vol. 43, p. 119–122).

woman guardian shows to her man red and white beads in her hand and tells him that white indicates health while red means sickness, thereby pointing out to him their deep-rooted beliefs in the diseases associated with intercourse or association with women during menstruation. 881 842

Then follows a test of manhood. The women guardians put little pieces of stick (*lukwi* – sticks or firewood) on their heads and sing: [533 539]

"Ngumpe nikwumpu lukwi kwa mnuku'chawuno liu!"
"I must give my wife (when sick) firewood of the *mnuku* although it gives lots of ashes!"

What is meant is that when his wife is ill, the husband should fetch the firewood even though he does not know which woods give least ash; the *mnuku* tree gives many ashes. The little piece of wood a few inches long with a notch in the middle is then handed to the young man by his guardian. He places it on the ground in front of him, kneels down, and with a small axe he attempts to divide the stick at the notch. If he is successful, he is greeted with cheers, clapping, and much rejoicing. By proving his power to hit straight, he has also established his manhood; it is prophesied that he will soon have children. Should he miss through nervousness, shouts of derision welcome him and his guardian shows her disgust with his performance. If he is a young fellow well-liked in his village, he may be allowed to make a second attempt. After this ceremony, each couple bathes each other in their shelters by pouring water over the head and body without removing the clothes, thus making brotherhood. Forever after the man must treat this woman with great respect, must not address her for some time, and then only after making her a small present.

The woman guardian picks up the two pieces of the broken *lukwi* and on the morning before they all leave *Chiputu*, the mother or sister of the young man gives her a string of red or white beads saying, "These are to bind up the bundle of wood." The man's guardian binds up the pieces of wood with the beads and gives it to her man. When they have returned to the village, they go to the young man's wife and he presents them to her. The guardian, however, steps in and slips off the beads which she keeps, while the wife, pleased at her husband's success, drops the two pieces of wood into the fire.

During the weeks that the girl *usili* remain under instruction in the village, those young men who have been *ku-lukwi* sleep in one big enclosure away from their wives and do not cohabit until after the second return from *Chiputu* is made.

Another *ku-lukwi* test sometimes, I believe, introduced into Yao ceremonies but really one practiced by the Mpotola people and not proper to the Yao, is as follows: [177]

The guardian lies on the ground, wearing a small loin-cloth, and holding beads in her clenched hands, red in one, white in the other. Her man standing at her feet, bends over her and projects saliva on to her abdomen through a rolled up leaf held between his lips, at the same time choosing one of her hands. If he chooses the hand containing the white beads, he is hailed with delight as a man indeed, but should he choose the hand containing

3:Stannus D-5 (ca. 1912) 1922 FT7 Yao FT7

Strophanthus is specially reserved for poisoning arrows and it is doubtful if it is ever given by mouth; *Kombe* is the name used in this country, but there are two species of strophanthus in Nyasaland, *Strophanthus kombe* and *Strophanthus courmontii*. The seeds and bark are used and, less commonly, the root. They are mixed with the roots of a shrub called *Ndwazimba*, pounded together and boiled, and the liquid used to anoint the arrows. The use of poisoned arrows is a Manyanja custom adopted to some extent by the Yao.

137 278 [07] [226]

A number of poisons are also employed in catching fish, *Ngunga* and *Mtuta* being the most common, also *Kamsimbile Ngachi* (*Nkodzi*, Chin.), and *Chingunga*.

Witchcraft. In my article on the Anyanja,[1] reference is made to witchcraft and *mfiti*. Beside the Nyanja *mfiti* or the Yao *mazwi*, all tribes as far as I know in Nyasaland have firmly fixed among their beliefs, the conception of the supernatural human-flesh eater. It is a little difficult to define the term *mfiti* or *mazwi*, as it has come to have the somewhat generalised sense of one who practices witchcraft, but the original meaning is defined by Scott,[2] a person who has acquired the knowledge of occult medicine by which he can kill his fellow men; "what makes the power so dreaded is not that the *mfiti* exercises this power for reasons of spite but (as is supposed), to eat the body of his victim." It is at once interesting to note that the word *mfiti* does not belong, according to Scott, to the personal class of nouns but to the *gu-as* class, which seems to imply that they believe a *mfiti* to be something outside the idea of a person. Among the Anyanja in Zomba district, however, the word belongs to the first class of nouns (the personal class) as also does *mazwi* in Chiyao.

754

The natives believe that any man in a village may be a *mfiti* or it might be more correct to say, is capable of changing into a *mfiti*. *Ufiti* is the state of being a *mfiti;* in Chiyao, *uazwi*.

As I have pointed out under *Diseases*, practically all illness and death are thought to be due to the machinations of some person or persons. The inciting motive which may cause a man to compass the death of another may be spite, revenge, etc., or the desires of *uazwi*. Until recent years, when the Government legislated to put down witchcraft, the charges of *uazwi* were everyday occurrences. Whether or not the prevalence of the idea of cannibalism has any substance in correspondingly frequent practice has never been and now probably never will be surely proved. Duff Macdonald believes it to be so.[3] It is true that native graves have been and are still rifled and that the graves of some Europeans have been so opened in the past, as I have learned from eyewitnesses. It seems probable that the graves were tampered with by natives with the object of removing the human remains, possibly to be eaten or to obtain portions of the body to use as charms. Mr. L. T. Moggridge,

[1] 'Notes on some tribes of British Central Africa,' op. cit., p. 203.
[2] Op. cit., p. 545.
[3] Africana, op. cit., vol. 2, p. 252-254.

3: Stannus D-5 (ca. 1912) 1922 FT7 Yao FT7

and the baskets and pots. A wooden dish *ubini* may be seen occasionally, but of late years, this has been generally replaced by enamelled articles. 415 [77]

Around the entire hut, or simply enclosing a yard behind it, there is often a fence about five feet high. In the enclosure thus formed, many household duties are performed, such as the pounding and sifting of grain. The grain store *upulus* often stands in this yard with the pigeon-loft and possibly a hen-house or goat kraal; these are sometimes found in the open space at the front of the house. If a grain store is built within the hut itself, it is then known as *ubunga*. Near the pigeon-loft will be seen a pole with prongs supporting an old pot with water for the pigeons to drink. In a tree in the bush nearby, there may stand a beehive, consisting of a bark cylinder. Similar cylinders are sometimes used as pigeon-houses. 361 343 [231]

The large pots for brewing beer are usually set in the yard or on the back veranda, together with a basket of split bamboo for carrying fowls, *chitetete* (Yao and Chin.). 415

Gourds. Gourds are grown in the village for use as vessels of various kinds. Different shapes serve different purposes; names are given them according to use rather than shape, though these more or less coincide. Ladles for water or beer, *mawale* or *upao* (*nawaro* or *chiko*, Chin.) are usually long-handled gourds (Pl. XIV, figs. 7, 8, 9). Drinking vessels for beer, etc. *chipunda* and a specially large one, *ntawala* are usually of the shape illustrated in Plate XIV, fig. 1; sometimes they are like fig. 5, but this shape is more commonly used for water. *Lipache*, the type illustrated by fig. 2, is also used for drinking or for holding gruel. Oil flasks, *chiani* (*itupa*, Chin.), are usually of the double-bellied type (figs. 4 and 6). Salt bottles, *chitumbe* (*chiguru*, Chin.), are similar to oil flasks. Rattles, *sanje*, used at dances etc., are also made from gourds, often from those with tuberosities (fig 3). Other uses for gourds include pipes, snuff-boxes, enema funnels, and resonators for musical instruments.

Pottery. The art of pot-making appears to have been known to the Yao for a very considerable period. There is no history relating to its introduction among them. The art is in the hands of the Yao women. As among all Nyasaland tribes, a particular kind of clay is used and no admixture with any binding substance is made. The pots are simply moulded by hand from base to brim and, without the aid of any wheel or other device, wonderful symmetry is attained. 323

After drying, the pots are fired by being set on their bases on the ground and a wood fire is made round and above them. They are then sprinkled with an infusion of the *ngumyuse* or *ntumbi* tree, a head of millet being used for the purpose, after which the pots are set upon a fire and millet husks are thrown into them and allowed so to be incinerated. These customs, a kind of christening of the pots, "insure their turning out well."

No glaze of any kind is used, but they are sometimes colored red by boiling with a pigment called *ngumu*, prepared from a red sediment found in sluggish streams. The preparation of *ngumu* is in the hands of men and women who make a trade of it, such as a man called

3: Stannus D-5 (ca. 1912) 1922 FT? Yao FT?

3. *M'tungwi*: this large double basket one half of which fits over the other like a cover, is now very common among the Yao; it was copied from the Swahili *kjimundu*. The body is made in the same way as the other baskets, but each half has a broad rim of wood which is always cut profusely into patterns (Pl. XVI, fig. 13, and Pl. XVII). 285 415 [177]

4. *Chimumbi*: the beer mug, a small hemispherical basket rendered waterproof by smearing with a sticky substance prepared from the pounded stem of the *mpono* tree or from the root of the *mpona* plant mixed with charcoal (Pl. XVI, fig. 12).

5. *Lisungulo* (*lupe*, Chin.): the beer strainer made in the shape of *chikungu*, but the strips of bamboo forming the warp and the weft are of different thickness, so that spaces are left for the fluid to run through (Pl. XVI, fig. 14).

Mats. In years gone by the Yao made a rough kind of plaited matting of split reeds called *chipondo*; it is not seen today. Another type of mat seldom used today is the *lichiko* (*chiko*, Chin.), made of a number of reeds of equal length bound together by several rows of interlacing string (Pl. XVI, fig. 7). Reeds are also used to make the *mpono* (*mpone*, Chin.) (Pl. XVI, fig. 10). When dry they are split and fastened out with the smooth surfaces all on one side. A number of reeds so flattened lying side by side are then sewed together with native string, and form a clean, smooth mat for sitting or sleeping. 285

Mats made of plaited strips of sun-dried palm leaf are now in common use, the art of making them, I believe, having been introduced from the coast. Large mats of this kind called *liambi* are used in the chief's courtyard (Pl. XVI, fig. 9). Smaller ones called *mkoko*, or by the old people *mdungu*, made from the leaf of the wild date palm, are used for sleeping (Pl. XVI, fig. 6). Since the advent of the European, mat making has become an important industry, and *liambi* and *mkoko* are to be found in every European house.

A still finer kind of mat, circular in plan and stained in patterns, has lately been introduced by the Swahili. Red and black dyes are generally used; the red is either *mpono*,[1] or a stain called *mchenda* prepared from the bark of a tree called *mnembe*; the black dye is made from the root of a vine, *lilwungu* (*chikwa*, Chin.), the itch bean. [386]

The matting made of these strips of palm leaf is in the form of a ribbon from three to six inches wide, according to the fineness of the strips. The ribbon of matting is sewed into the form of a cylinder by plaiting the edges of the ribbon together in a large spiral. This cylinder of matting is then cut down one side and laid flat, and the cut edges finished off with a plaited mat border (Pl. XVI, fig. 8). It will be seen that, owing to the way they are made, these mats are never quite rectangular. The ribbon of matting used for the circular mats is narrower still and sewed round and round in a flat spiral fashion.

Cloth. The Yao in years gone by made a woven cloth, but the art has long since died out, and I have never seen a piece of native-made cloth. I imagine, inasmuch as bark-cloth is still worn by the poorer people, that the native-made woven cloth was only worn by the few, probably the chiefs. The older cloth was undoubtedly bark-cloth, worn, as I 286

[1] Vide supra, p. 341.

3: Stannus D-5 (ca. 1912) 1922 FT7 Yao FT7

two feet high and fifteen inches in diameter, hollowed out from above for about two-thirds of its length. Many are made with a kind of base or stand, and some have roughly carved bosses on the outside; these are called "the breasts," doubtless emblematical of women, a large part of whose life is spent in preparing flour (Pl. XV, fig. 15). 412 [532]

The fire-stick. Matches are becoming more widespread year by year and soon the knowledge of how to make fire with a fire drill will be lost. The method employed among the Yao is as follows: a flat surface is cut on a piece of partly rotted wood. In the middle of this a small depression is made, and on one side of the piece of wood a groove is cut leading from the flat cut surface. The piece of wood is held firmly on the ground by one person with a piece of old scorched cloth or some charred sticks at the base of the groove. A second person, by rolling a stick of hard wood rapidly between his hands with the point directed against the depression on the flat surface in which a little sand has been placed, drills a hole into it. The heat developed is sufficient to cause the powdered rotten wood to start smouldering. This is then turned out on the cloth, which is gently waved in the air till it catches fire (Pl. XV, fig. 16). 372 [177]

Boats. With the exception of a small coracle-like vessel, *likuŋgwa*, made of rough bark and used for crossing streams, the Yao have no boats. The dug-out canoes which they use at the present day are made for them by the Anyanja. In addition to the bark boat, they use a kind of raft made from the pith tree, *bunguwa*. 501 [539]

Tobacco. The use of tobacco in some form is universal among the tribes of Nyasaland and the Yao are no exception. The method of use varies among the different peoples; smoking, chewing, and snuffing are all practiced, but while the Anyanja is essentially a pipe-smoker, the Yao takes snuff, although I think only lately he has also taken up smoking and chewing. A short time ago, a Yao who chewed would have been laughed at. The Anyanja do not chew but take snuff to a certain extent; the Angoni who do not smoke or chew are inveterate snuff-takers; the Atumbuka, Atonga, Asenga, and Ankonde are pipe-smokers and in lesser degree snuff-takers. 276

Tobacco is called *sesa* (*fodia*, Chin.). It is prepared by sun-curing the leaf, which is then rolled up into a twist and allowed to dry further. The common tobacco pipe consists of a clay bowl, often ornamented, and a reed stem; it was formerly called *ekilonga*, but is now known as *kalio* (Pl. XV, fig. 11). For hemp, *chamba*, the Yao use a water pipe called *ndundu* (*ngundu*, Chin.); this consists of a bamboo water container from which projects a reed stem surmounted by a clay bowl (Pl. XV, fig. 12). The word *ndundu* is also used for a tobacco pipe.

When tobacco is chewed, a little lime paste *ensubala* made from small shells is put in the mouth "to bring out the flavor," a small clay jar being used to carry the *ensubala*.

Both the Wayao and the Anyanja prepare snuff by grinding the broken-up tobacco leaves with a stone in a potsherd; the powder is then turned out into another sherd and warmed over a fire. A few drops of a preparation called *mapodi* is added for flavor. *Mapodi* is

3:Stannus D-5 (ca. 1912) 1922 FT7 Yao FT7

Peas, *ansuma* (*Pisum sativum*), are grown in abundance. There are two other varieties: *mbaa* (groundnuts), and *chindawira*. 244 262

Sweet potatoes: *mbatata* (*Ipomoea batias*), of which the natives are very fond; they distinguish a red and a white variety, *mbatata ayanjejeu* and *mbatata ayaiwaru*.

The tuber-like root of a bush called *ayambu* is also eaten, likewise the young underground shoots of a palm tree. The leaves of the sweet potato and the leaves of many wild growing plants are collected by the women and cooked like spinach; the flowers of pumpkins are used in a similar way. Of fruits eaten, the banana, *lipombo*, takes first place. A very large number of species of *Eugenias* are grown, including *mulumbuka*, *mbinga*, *sukali*, *nasiri ampunga*, *kabuta* a dwarf banana, *kaigwa* a wild banana, and *mangu*, the plantain. The paw-paw is found all over the district. There are several varieties of pumpkin, *lyungu*, including *mbonda*, *chindondoli*, and a very large species called *mtwa wa ngwena*, "the crocodile's head." Varieties of cucumbers include *kapuka* and *kabitungula*. 262 222

A large number of wild fruits are eaten, among them figs, *bakuja* (*Ficus*), *kiutu* (*Uapaca*), *chitili* and *liunga*, the fruits of two species of *Landolphia*, *matonga* or Kaffir oranges (a species of *Strychnos*), *chikundu*, the fruits of *Hyphaene* (palms), *matwatwa* (*Myrianthus*) a wild tree belonging to the mulberry family, and others, *ndowa*, *makangandembo*, *ndondoyoko*, *chingulungulu*, *chindogolya*, *malembe*, *likwenda*, etc. The seeds from the heads of bulrushes (*Typha*) are mashed up and eaten.

All fish are eaten except the *ngunga*, which always causes urticaria. 262

The flesh of all the antelopes, of course, sheep and goats is eaten greedily; only bushbuck is avoided by some people as it is said to cause a skin eruption. Elephant is shunned by many on account of its rough skin, also rhinoceros because of the ulcers which it often has on its body, and hippopotamus on account of the marks on its back which are thought to be akin to leprosy. People eating the flesh of these animals are supposed often to sicken with leprosy, the pachydermatous skin, the ulceration or anaesthetic depigmented patches of that disease being reproduced, as the case may be. Few will eat pig or warthog on account of the digging habits of these animals. It is thought they may sometimes grub up bodies from graves. These flesh taboos may be due to Mohammedan influence. The lion, hyaena, and fox no one would touch, as they are supposed to be connected with *uawi*,[1] but the heart of the lion might be eaten to acquire courage. Few will touch leopard flesh, but Kasungu's descendants do so. All will eat of the flesh of the serval cat but very few of the common wild cat. The rock rabbit, *ngungwaiva* (*mbira*, Chin.), is refused by most Yao as it is a "beast without shame," having no tail to hide what should in decency be hid. Very few will partake of the baboon, but monkey is acceptable to many. A few reject porcupine, supposing they will break out in spots, while the zebra may cause stripes, and none will touch the skunk. No one eats *sunja*, a mouse that is believed to die if it crosses a path. All kinds of rats are eaten, but the shrew-rat and cane-rat only by boys. Snakes 262 753 [77] [834]

[1] Vide supra, p. 286.

3: Stanmus D-5 (ca. 1912) 1922 FT7 Yao FT7

no one will touch. With the exception of carrion birds such as the crow and the hawk, most birds are considered fit to eat. The hornbill is not eaten, as it is supposed to carry part of a corpse on its nose.[1] Fowls form a regular article of diet, but some taboos in this connection are mentioned elsewhere.

Eggs are eaten only by children and old people; that is, by those outside the child propagating age. Milk is never consumed in any form. They say, "What a disgusting habit, to suck the juice of an animal while it is still alive!"

Pregnant women will not eat certain things lest the child be born with some deformity, such as the snout of a pig, or the white stripes of a zebra.

Art and decoration. Sculpture can hardly be said to be an art known to the Yao. The only piece of stone work I have ever seen was a granite boulder, on the surface of which cup-holes had been made for the game of *Bao* (Pl. IV, fig. 4).

Of late years, individuals here and there have begun carving wooden figures of men and animals. The Yao, of course, make no idols. It is uncertain exactly how long it is since any of these people started producing wooden figures. I should think that this art has sprung up within the past twelve or thirteen years, that is to say, since there has been a market for them among European residents. In the first place only natives and some of the common animals, the eland and leopard, were represented; since then, many animals and Europeans have been copied. The native is extraordinarily clever in reproducing characteristic features in dress, etc., so that a Portuguese is easily distinguished from an Englishman. The little models in ivory of animals and native household objects, made by the Swahili people on Lake Nyasa, have never been copied by the Yao. Neither do they make clay images of men and cattle as do the Zulu-descended Angoni and cattle-keeping Wankonde. No native would allow any wooden figure to remain in his house for fear of ill luck; the women especially would look askance at them, fearing some misfortune in their next pregnancy. Little wooden figures of birds, however, are sometimes seen affixed to the point of the hut roof.

The making of carved figures, then, is of recent introduction, or rather is a recent event in the evolution of the Yao, as they were not taught but self-inspired in the work.

The ability to make representations of objects by drawing appears in the same way to originate spontaneously here and there as a sport. Natives with a talent for drawing are found among all the tribes, and among the Yao, it is said, there have always been some who have been able to draw. Naturally enough, their reproductions are made on the walls of their houses, and their subjects are generally animals of the forest, sometimes men and houses, or some other object of particular interest[2] (Pl. VIII, fig. 1). I also give sketches of some other drawings I have noted (Pl. XVIII); the line figure of a man at Makanjila's

[1] Vide supra, p. [illegible].

[2] Cf. A. Werner, 'A Native Painting from Nyasaland,' *Journ. Afric. Soc.*, London 1908, vol. 8, no. 30, p. [illegible].

3:Smanus D-5 (ca. 1912) 1922 F77 Yao F77

301 of bamboo fastened together at one end on the flat side by binding with string, the free ends being sharpened to form the teeth of the comb. If the fastened end is ornamented with beads sewed on in patterns, the comb is called *lisumulo* (*lu-sumulo*, to comb). *Lisumulo* lie

[B24] *shinguendulo* from *lu-nguendulo*, to be sticky, is the name of a small comb worn purely for ornament. On either side of the base of this comb, pieces of wood variously shaped are glued with the sticky juice from the root of the *shinguendulo* tree. In this way, a sort of inlay is produced. Pieces of tin cans are sometimes substituted for wood. Women occasionally wear in their hair the small *shimulo* knife used for tattooing and shaving.

302 The natives taken readily to perfumes of European introduction, but previously he was

● [177] not an entire stranger to the use of such commodities. *Mbolo*, the bulbous root of a kind of grass which grows near water, contains some aromatic principle which has a pleasant odor. The stem is bent around and fixed into the bulb; this is then covered with beads and slung around the neck. *M'ongwa*, the Mlanje cedar, is also used, as well as the fruit of a shrub called *chiungwa*. These substances are scraped into the castor oil used for anointing, and give it a pleasant odor.

No pigments are used on the body. As a sign of great rejoicing, the head and face and perhaps the whole body are covered with ashes, but the natives do not even paint the face with flour as can [illegible] usual [illegible].

301 Bands of beads [illegible] around the head, either as a simple band or a band finished off with a bunch in one spot, [illegible] with a tassel. Finger rings are worn made of ivory, shell hoof and horn, lead, and iron wire. There is also a great variety of bracelets and anklets, a list of which is given below.

Chipunda: made of plaited grass, worn chiefly by little girls and women who cannot afford more expensive bracelets. As many as half a dozen may be worn on the wrist.

Likungulu (pl. *makungulu*): single circles of solid brass, one half to three quarters of an inch in diameter, worn by women usually as anklets, one or two on each limb. They may still be seen on some of the old women, but as they cause much discomfort, they have gone out of fashion. A man used to be very proud to see his wife adorned with so much wealth and she was content to be so hobbled by her vanity. The hammering up and pulling open of the *likungulu* circle in order to remove it cost a fowl.

Chilungu: a brass bracelet of small calibre; *lilungu* (pl.) signifies a spiral cylinder made from the same thick brass wire covering the entire forearm.

Likwinjili: like *chilungu* of thin brass or iron wire, worn on arms and ankles.

Ching'ombe: a bracelet of fine brass wire wound round a slender cane. All the brass comes from the coast.

Likuno: a large ivory bracelet worn by men and women.

[237] *Ulungu:* ("stiff tail hairs of an animal"), the bracelet made of the tail hairs of the elephant or the gnu.

Lidoko: the bracelet made from elephant hoof.

3: Stanner D-5 (ca. 1912) 1922 F77 Yao F77

that she is tattooed more profusely on the buttocks and legs. The circlet of beads was formerly made like *mapanda* with a bark-cloth core, called *ntumbo* or *ndule* (*to-wule*, to slip off), referring to the *ndule* being slipped off over the legs. The fashion now is to wear single strings of beads; each string is of one color but all the strings are different and perhaps number a dozen or more.

Lipembe: a bead belt three-inches wide, worn by Yao women near Lake Nyasa. A bead apron, *Ranjere*, is also worn by them but not near Zomba (Pl. VI, fig. 2).

A woman removes her beads when she is "unclean," that is: (a) during the menstrual period, (b) during the period of mourning for a near relative when coitus is forbidden, (c) before the birth of a child and afterwards until such time as she may resume intercourse with her husband.

A large variety of beads has long been used by the Yao. There are some rarely seen now which were much prized in years gone by, while others are of quite recent introduction. There is no evidence that they themselves made beads and there are few which are probably not of European manufacture.

Clothing. The Yao used bark-cloth before the introduction of woven materials. The older people may still be seen in it and it is used in most of the ceremonies. At one time, they also used to weave a cloth called *likumunde* from a native cotton plant. This has been given up since the introduction of imported materials.

For the method of wearing cloth, see Pl. II, fig. 2. The very poorest people wear only a strip of calico round the *pudenda*, held in position by a string round the waist hanging long behind and in front; this is called *ntuthu*. Yao women, when menstruating, wear under this a little piece of cloth called *likondi*; it is only worn at this time and not always as in certain other tribes.

Warfare. Fighting has naturally played a large part in the life of the Yao as among other African tribes, but at no time were these people a trained fighting race. Warfare was of a desultory character consisting mostly of raids by one feudal chief upon another. A party of men belonging to a chief at enmity with another, meeting some of his followers would challenge them, "*Ahombe*, who are you for?" The name of the rival chief in answer was the sign for battle to begin. A false answer would never be given to gain an advantage. When about to throw a spear, the thrower calls to his adversary.

The Yao have possessed guns for a long time. Going out to fight, the Yao used to leap from one foot to the other, and spin their guns around in their hands. They made their own stocks for the rifles. They also used to make a small, cast-iron cannon about three feet long, called *kombola*, "a little nose." It was carried in the arms and was touched off by a torch. Drums called *ngoje* were taken into battle. There is an old war drum at Malenya's village, taken in 1886 by the old Malenya from a Mang'anja chief called Mkokombo who lived near Lake Chiuta. Since then, this drum has always gone into battle with Malenya. Around it his men would dance and anyone who had killed a man in battle would run up to it and spit upon it in salutation.

3:Stannus D-5 (ca. 1912) 1922 FT7 Yao FT7

Both before and after the introduction of guns, the Yao used spears, *lipunga*, and bows, *ulunja*. The spear is a five foot long throwing spear with metal head and wooden shaft. No shield was used. Bows and arrows are made from the wood of the *tuse* or *pimbingula* tree. The string is made of tendon. A double-bellied bow called *ulunja wa ulumu* was sometimes used, but, I believe, originally came from the Anyanja. The arrows, *mpumbe*, have a metal arrow-head, and were often poisoned with *kombe*. 411

Hunting. The same weapons are used in hunting: the gun, the spear, and the bow and arrow. Smaller bows and arrows made with bamboo or reed shaft are also employed for shooting birds; one of the arrows has a blunt wooden head and serves to stun the bird. 224 411

From the Anyanja, the Yao learned the use of a harpoon for spearing the hippopotamus. The harpoon is a heavy spear-head of iron about eighteen inches long, attached to a rope and float. From the Anyanja, also, was learned the use of the falling block with spear for killing hippo. [177]

Elephants are caught in staked pits, and the larger antelopes are similarly trapped in pits with the sides sloping inwards towards the bottom, so that as the animal falls lower and lower with exhaustion, it is eventually suffocated. 224

Small buck are driven by dogs into nets set for long distances in the forest, and then speared or shot. Traps are also set for these smaller antelope and for many other small animals, rodents, etc. Birds are shot or trapped. Bird-lime is also employed. It is prepared from the juices of a number of trees by pounding the vegetable matter in water; the sticky mass so made is applied to sticks or poles. The sticks are placed near drinking places so that the birds alighting to take water become entangled. The poles are affixed to trees so that they appear to be the topmost boughs; this the native does, recognising the common habit of birds to sit on the very top of trees. The strength of the bird-lime is made according to the size of the bird he wishes to catch. [231] 223

Fishing. I am not sure how far the Yao is a natural fisherman. Not long ago he used only a many-pronged spear to catch his fish. Since then, he has acquired from the Anyanja the knowledge of making fish-traps and nets, and of using the fish poison. When the Yao came to live and intermarry among the Anyanja, there was one practice of the latter which they would not adopt and which caused a good deal of ill-feeling. A Mang'anja man coming home after fishing always used to prepare the fish and, leaving some ready to cook, he cooked others for his wife, bringing her water at the same time to wash her hands. After eating her own fish, she cooked the rest for her husband. A Yao would never cook for his wife. 226 [578 563]

Traps. The following is a list of some of the traps I have found in use among the Yao. The sketches will serve to explain their mechanism better than a lengthy description. Some are very ingeniously made, and most recall similar traps made in other parts of the world. 224

1. *Lulungi lwa litumbu*, a trap for the cane-rat (Pl. XIX, fig. 1).
2. *Lulungi lwa mbindi*, a trap for sharp-toothed gnawing animals, so called from

3:Stanous D-5 (ca. 1912) 1922 FT7 Yao FT7

224 *ndindi*, a joint (of bamboo) which slides down the string next to the noose so that the captured animal cannot bite or gnaw through the string (Pl. IV, fig. 3; Pl. XIX, fig. 3).

3. *Lukwaji* has *mulende* or *ndimwa*, a trap for water-rats (Pl. XX, fig. 7).

4. *Lukwaji* has *ngunda*, a trap for the partridge (Pl. XX, fig. 3).

223 5. *Chijumba* also *ijuwi*, "the house for birds," also used to trap small animals (Pl. XX, fig. 2).

6. *Lukwaji* has *lukwi*, a trap for the neck (of guinea fowl) (Pl. XX, fig. 4).

7. *Lukwaji* has *ndilimata*, a trap for the tread (of the guineafowl); *ku-limata*: to put the foot down, to tread. The string square is about 8 × 4 inches (Pl. XXI, fig. 2).

8. *Liwowa*, a trap made of split bamboo. A bird going to pick up the grain is caught by the head when the trap is released by the string which the trapper pulls (Pl. XXI, fig. 3).

9. *Lwaw* has *ijuwi* or *ngwa*, a bird-trap made of netting on a hinged frame-work, operated by a string (Pl. XXI, fig. 4).

[224] 10. *Lilimo*, a falling stone trap for mice. Rats are said to pull off the trap with their tails and are never caught (Pl. XXI, fig. 1).

10a. The same trap set for catching birds (Pl. XXI, fig. 2).

11. *Mulidya*: (*lidi* = hanging loose), a noose for small birds, set on trees (Pl. XX, fig. 1).

[674] 12. Fowl thieves use a very simple contrivance consisting of two grains of maize threaded on one end of a piece of string some six inches long, at the other end of which is attached a leaf folded up into the form of a cone. The fowl, enticed by the maize, swallows the two grains and the attached string, so that the cone is drawn over its head; it is then helpless and is easily picked up by the thief, who has only to pull on the string to remove the leaf.

224 13. *Chipwumbu*, a hollow cylinder of wood with noose activated by a wooden spring, for catching rats (Pl. XXI, fig. 5).

14. *Chipute*, a similar trap made of bark, for mice.

15. *Lilwa*: a plaited bamboo cone into which a rat forces its head to get at the bait, but finds, when it tries to withdraw, that it is caught by sharpened pieces of bamboo projecting backwards into the cone (Pl. XX, fig. 6).

227 16. *M'wanyi*, a fish-trap of the same design, from the Anyanja (Pl. XX, fig. 5).

17. *M'ejwa*, a fish-trap on the lobster-pot principle, often set in gaps in a fence built across a stream, copied from the Anyanja trap called *mwe* (Pl. XXI, fig. 7).

[177] 18. *Njiwi*, also I think from the Anyanja, consists of a long basket-work, extinguisher-like arrangement which is slapped down over a swarm of small fish; the hand is introduced through an aperture in one side and the fish removed (Pl. XXI, fig. 6).

3:Stanner D-5 (ca. 1912) 1922 FT7 Yao FT7

524 called *bowa*; *makowe* or *nambowe*, the words given by Dr. Sanderson, are not known to the Yao in this district. There is a simple game played among the Anyanja children and therefore called *chiwa* (shellfish or for children), but the common game played is more difficult as shown by Dr. Sanderson. *Mchombwe* is being partly displaced by a Swahili variety called *bao*, or often by the Yao, *ulwa* (Pl. IV, fig. 4). I may here also point out that the words *mawe* and *nade*, which Dr. Sanderson uses for the Manyanja and Angoni varieties of the game, are often replaced by *nyiwe* and *tawa*.

[m]

857 Yao children play at keeping house in little grass *structures*, made near the village or in the fields, while their parents work. Children who can only toddle may be seen practising dancing the steps of their elders. The boys play with miniature bows and arrows made of a kind of grass, *ewe*, and make a toy dart-tube, *uti* (Pl. XXII, fig. 5). Little dug-out canoes eighteen inches long are made for them to sail in pools.

857 Among the lads in a village, games of fighting are much indulged in; two sides are opposed and their weapons are of various kinds. Sometimes each is armed with a length of
526 bamboo, into the hollow end of which sand and pebbles are put, representing powder and shot. This end of the bamboo is then rapidly swung in the direction of the "enemy" and will discharge the sand and pebbles into the face of the opponent. This is called *uti ja mwanga* ("gun for sand"). The boys are sometimes armed with maize cobs for throwing at each other.

Chiwere is another form of fighting. Armed with a collection of small stones, each flicks his stone at the enemy with very good aim, using the fore-finger of the right hand to propel the stone, the index of the left hand acting as trigger and the left thumb as the spring. The name comes from *wer* the sound of the whizzing stone as it goes through the air.

In a pool opposing sides fight with rudimentary syringes made of bamboo, driving streams of water into each other's faces. This is called *pierwa*, from the sound of the stream of water, or *uti ja mani* ("gun for water"). In the water they also play *chitwinyichinga*, (*ku-twinyichinga*, to press down). Boys are ranged on two sides; each tries to "*ntik...*" one of the opposing side and put him down into the water, holding him down between his legs. An old water trick is for a boy to go down to the bottom and there squat with his face turned upwards, the mouth stretched wide open by the fingers; viewed from the surface the face looked flat and very grotesque. There is also diving for *mawa*, *chitiwiliko* (*ku-tiwiliko*, to dive for).

A kind of skipping, called *chiwere*, from *wer wer* the sound of the rope as it goes round in the air, is a great favorite. A man with a heavy rope about fifteen feet long, with a bundle of grass at the free end enclosing a lump of heavy wood or stone, swings it round and round his head. The faster it goes, the higher it will fly out, while the boys in turn run in and jump over it. Sometimes a boy is caught by the rope and gets a nasty blow, occasionally resulting in a broken limb.

3:Scanned D-5 (ca. 1912) 1922 FT7 Yao FT7

Taking advantage of the natural inquisitiveness of youth, a favorite trick for making money is for a man to appear in a village making pretense of having a peep-show, something contained in a covered basket or in a cloth. On payment of some small amount, the youth is allowed to peep in, maybe only to see a dead mouse; finding he had been "done," he of course bursts out laughing and, anxious that all his companions should also be "done," he does not "give it away" and so the peep-show man makes quite a good living. 857 673 543

Yao girls play with dolls of two kinds, *likde*, made from little gourd-like fruits called *likwape*, and others called *mwanache*, "a child," made from maize cobs. These dolls they carry about on their backs as mothers do their children. *Likde* is made of three of these little spherical fruits glued together with beeswax; on the one which represents the head, seed, red and blue, of the *ulungwipe* tree are cemented in rows to represent hair, and often beads, as in the *nchanda* method of hair-dressing. One sees similar dolls made for the children of other tribes. Thus, among Mombera's Angoni, a doll called *mwana*, "a child," is made in a dumb-bell form of two small spherical gourds joined by a bundle of sticks bound together with string and wax; on the head-piece string is cemented to represent hair. Their children also play with little clay images of cattle and men, a custom they have preserved from their old Zulu ancestors but foreign to the Yao. The Ankonde children have carved wooden dolls not seen in any other tribe. *Mwanache* is made from a maize-cob by shredding the papery coverings of the cob; on these shreds are threaded white and red varieties of maize to represent beads, or the shreds are plaited into a number of tags to represent hair. 857 524

Latterly, the children have taken to making hoops and show considerable skill in driving them with a piece of bent reed (Pl. XXII, fig. 8), while the older boys make two-wheeled representations of bicycles with a very clever imitation of all the parts of the machine. [m]

The whipping-top, *mangulpe* or *mangwape* (*ngwali*, Chin.), is found among the boys' toys. It is made of a conical piece of wood with a flat top and no metal peg. It is started spinning by pulling off the string wound round the top. The whip consists of a piece of string fastened to the end of a stick. Sometimes tops of large size are used, and two boys whip them from opposite sides (Pl. XXII, fig. 4).

A game called *chipute* is played by youths; it takes its name from *ku-puta*, to strike, and refers to the action of striking with a finger the hand in which a bean is guessed to be. A spiral is drawn with the finger in the sand with a central point to represent a village, and a tail-piece prolonged on one side to a second point which represents a slave-market on the coast. Along the line, a number of other points are demarcated to represent sleeping places en route. At the village, two white beans are put to represent the two players and with each is a smaller brown bean to represent his slave. At the slave-market are placed a variety of beans to represent trade-goods, calico, beads, etc. Each of the two players in turn shakes a single bean in his closed hands and then closes the hands, separating them at the

857 To the index:

534 "*Lukungulu lwa ng'ombe lwa bwandala mwilumbu!*"

539 "(This one is) the leg of an ox which walks on the plain!"

To the thumb:

"*Chimwene*"

"The fish"

857 *Cat's Cradles* are known as *ukingwa*, "the spider's web" (Pl. XXIII). The position
524 of the string on the hands is as in Position I of Miss Hadden's book and this is followed by Opening A, given by the same author.[1] (Pl. XXIII, figs. 1, 2.) Three methods of arriving at the same figure, which is called "the net," are shown here (Pl. XXIII). Variety C is followed by the making of a knot, figured in C 13, known as "the child." There are probably a number of other forms made by natives, but these, which I saw one of my women patients make, will serve as an example.

Musical Instruments. The number of instruments proper to the Yao appears to be
534 small, indeed probably only two in number, the *mangwanyende* and the *chilipuka*, with perhaps the three holed flute, *ukimbire*.

The former is constructed on the principle of a xylophone; it consists of two trunks of banana trees laid on the ground and held in position by stakes. They are not quite parallel but approach each other somewhat at one end, being from one to two feet apart; on these rest cross-wise a number of pieces of wood of varying thickness and length, kept in position by pegs driven into the banana trunks on each side of each billet. These are struck with sticks by a single player, or by two persons sitting on opposite sides of the instrument. Another variety is found in which the pieces of wood, which may have holes bored in them to effect differences in sound, are arranged over a hole scooped in the ground (Pl. V, fig. 1).

The *chilipuka* consists of a piece of plank hollowed out to form a resonator on which are fixed a number of keys of bamboo or metal of different lengths. These are arranged across a bridge, and the free ends are set in vibration by twanging with the fingers.

[FT] The instrument now most commonly seen is the *ussu* which was introduced, I think, from the coast about 1890 to 1900. It is a type of guitar.

An instrument played by women — and this again is of recent introduction among the Yao — is the *mkungulu*, which consists simply of a stick of wood about a yard long to which is affixed a single string. One end is held between the teeth, the other in the hand; it is twanged by being struck with the thumb and finger of the other hand close to the mouth, which is opened to different degrees, and gives a variety of notes resembling those of a jews' harp.

The *ching'wengang'wengu* and drums are referred to under *Dancing*.

[1] Kathleen Hadden, Cat's cradles from many lands, New York, 1906.

3:Stanner D-5 (ca. 1912) 1922 FT7 Yao FT7

Chindimba: the *chindimba* songs are the favorites among all the older people. They have been in late years partly replaced by others, but, at the present time, there is a tendency to return to them; they are staid in tone and the dance is sedate. *Chindimba* is always played at mourning. While the whole company sits around in a circle with the drums at one side, a couple of people do the dancing in the middle. The drums used are a *chingwanga*, two *ichumu*, and a *likuti*. With the commencement of drumming, a man well known for his songs steps out into the middle and begins singing; he is followed by another man or maybe a woman who sings a second part; the two singers are generally people who have found that they sing well together. Two such people will be welcomed, and they may sing many songs, while any young upstarts who do not sing well together, will be given to understand that their performance does not meet with approval. People have their favorite songs, and there may be much heart-burning if an old man finds some one else singing a song that he considers especially his own. As they sing, they dance their peculiar shuffling steps. (The words of some of these songs are given later.) 535

Sukupe: an Angoni dance sometimes danced by the Yao. It resembles *chindimba* in that all sit singing and clapping while, one at a time, men dance in the open space to time given by bamboo sticks knocked together. The songs are all hunting songs.

It is impossible to describe the steps used in all the dances; for each dance, they differ, of course, and except by a cinematograph film, they cannot be reproduced. The movements of the feet are ordinary stepping motions or patting of the ground with the feet, the actual excursions being very small, so that in most cases it is impossible to devise any means of making out the steps. To enable them to perform these steps, they commonly dance with the knees bent, the buttocks protruded behind, and the back arched. In some cases, this attitude is extreme. [516]

There is a larger series of dances which, to the uninitiated spectator, appear to resemble each other very closely. The general plan of the dance is as follows. The drums are placed in the middle; around them in a circle are the dancers and outside these, the onlookers. The circle may be thirty or forty strong, composed of men only or of men and women as the case may be. Commonly, the ring of dancers is divided into two halves, each half being headed by a leader who sings the song, all joining in the refrain, while the onlookers do the clapping. When the drums begin, they all walk round in a circle, but at a given signal, one of the drums gives out a new time, and the whole circle starts dancing with short, shuffling movements already described, usually progressing in the circle, sometimes going backwards, sometimes facing the drums or turning right around in the line.

M'kwanda is a dance of, I believe, recent introduction which has replaced to some extent *chindimba*, much to the disgust of the older people who dislike the innovation. They shake their heads and say, "*Chilumba chimwalle!*" "The world is finished." The drums used are *likuti*, *ulipulipu*, *mukwa*, and *chingwanga*. It is danced by men and youths only. [177]

Njonda or, as it was known some years ago, *ngwambuli*, is danced like *mkwanda*, but the

3: Stannus D-5 (ca. 1912) 1922 FT7 Yao FT7

524
322

2. A BIT OF YAO LAND

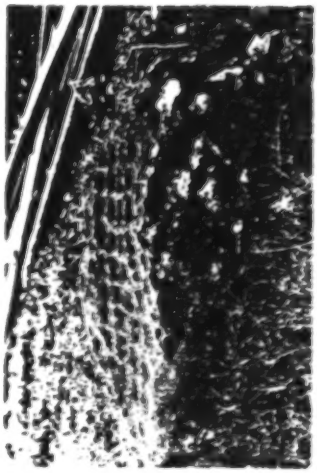

4. GRANITE WORKED WITH CUP-HOLES FOR THE GAME OF *Bao*

346
531
177

1. A MOHAMMEDAN MOSQUE DECORATED WITH GEOMETRIC DESIGNS OF COAST ORIGIN

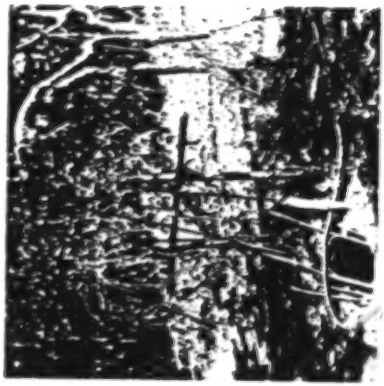

3. A SPRING AND NOOSE TRAP FOR SMALL ANIMALS

[End Plate 4]

3: Stannus D-5 (ca. 1912) 1922 FT7 Yao FT7

142
291
531

1. A Yao girl

2. Yao girl wearing head apron

[177]
[304]

3. Two Yao girls wearing trade cloth

4. A young Yao woman

[End Plate 6]

4: Stannus D-5 (ca. 1909) 1910 FT7 Yao FT7 Marevi FR4

case *mwavi* might be administered; if adjudged guilty the accused would be burned on a pile of wood. M 695

Evidence is given without taking any oath; a false witness is not punished. M 696

Justice is occasionally summary. At Mponda's, after conviction of adultery with one of the chief's wives, a man's throat was cut on the spot. Drowning was the usual punishment with Mponda.

Punishments for all offences practically meant payment.

CUSTOMS, SALUTATIONS, ETC.

The correct salutation among Machinga Yao and Mañanja on meeting is clapping the hands, the hands in front of and at right angles to the body parallel to each other, thumbs against the fingers. The clapping should be continued for ten minutes after having passed; after passing a chief it should be continued for half-an-hour. M Y 576

Another form consists in slowly beating the breast with the right hand, the head slightly inclined forward. The lower in station makes salutation first to the higher, a man to a chief, a woman to a man; exception is made in the case of an old woman, who is saluted by the man. Scattered all over the country a raising of one or both arms is a common form of salutation, but is probably only a corruption of the military salute. M Y [554] [888]

Slapping of the nates or thigh with the right hand is also seen, among old men usually. In imploring mercy from, or on the first occasion of meeting, the chief, a man lies prone on the ground and catching the foot of the chief, puts it on his neck—a sign of absolute submission. Women kneel at the approach of a man. Words and expressions of salutation are few—*Moyo* (=heart) being the only old expression used. Now commonly one hears a word (sounding like *mōnī*) probably a corruption of good morning, and the Swahili greeting *Sukuari* with the double hand-shake of Mohammedans. M Y [201] [562] [177]

A man returned to his village after an absence rests awhile, then his wife comes to him and kneeling greets him, *moyo*, her husband returning *moyo*.

Years ago, a man of any importance was received with firing of guns and shouting. A headman is received now with *Ntungululu*, the women wobbling their tongues in their mouths. Ashes are put on the head as a sign of joy. M Y [152]

In the morning the husband and wife do not greet each other, but in the village friends "give each other good morning" (=*Moyo*). On waking in the morning, a woman cracks all her joints (=*Kulim chala*). She then massages her husband and cracks the joints of his fingers. M Y [512] [576]

One man wishing to see another goes to his house, and squatting outside the door cries "*Icho!*" three times (=there), at the same time clapping his hands. If no answer be given he goes away, even though he knows the man is within, no answer meaning that the inmate does not wish to be seen. If invited to enter he does so, the man of the house rises and gives him salutation. He makes small M 574 576

4: Stannus D-5 (ca. 1909)1910 FT7 Yao FT7
Maravi FR4

M Y 252 M Y 264 spoon into a clean shallow basket or on to a plate. The *ndiwo* or relish, consisting of vegetables such as beans or a kind of spinach, a little fish or chicken, is cooked in a separate pot, and round these those about to eat collect. Washing their left hands in water, they take some of the porridge and making a sausage shape of it, dip it in the *ndiwo* and then cram it into their mouths.

M Y 217 258 Salt was obtained either from natural deposits or from "salt earth" on a stream bank near Fort Johnston, or from the ashes of burnt *bango* reeds or *machedza*; by a method of percolation through porous pots.

M Y 271 515 The native rather drinks between meals—water. After eating he may wash his mouth out and clean his teeth, using the frayed end of a piece of wood as a brush.

M Y 273 *Alcohol.*—With the exception of the people living on the lower river, who drink fermented palm juice,[1] beer is the common alcoholic beverage. Beer is made from maize (*chimanga*) or millet (*mapira*); the crop of the latter is very largely used for beer making; it makes the best beer and is certainly preferred by Angoni.

Gruel is prepared by boiling flour with water; after an hour leaven (*chimala*) is added fermentation sets in; and it may be drunk the next day; it is the sweet beer, *mtibe* or *ontondera*. On the second day it is again boiled and is allowed to cool; the third day more leaven is added (*chikutikwo*); the fourth day fresh gruel is made, and the contents of the original pot, now called *nganga*, is added to it, making two pots of beer. It may be drank the same day while hot or allowed to cool and taken on the second day.

Food-stuffs.

M Y 262

1. Maize (*chimanga*), millet (*mapira*, *mawere*), rice (*mpunga*).
2. Cassava—sweet potato.
3. Beans and peas of many varieties.
4. Pumpkins, cucumbers, melons (*drungu*, *mkuka*, *chibwende*).
5. Many kinds of leaves growing wild—also pumpkin leaves, of which a kind of spinach is made.
6. Bananas (*paw-paw*), sugar cane and reeds are sucked.
7. White ants, locusts, honey.
8. Numbers of small animals are eaten by Chipeta, Angoni, etc. With the spread of Mohammedanism this is going out; rats, mice, hares, rock-rabbit, etc. Chipeta will eat dog, and I once saw one eat baboon. Frogs, shell-fish, snakes, crocodiles, crows, vultures, eagles, are never eaten. M Y [177]
9. Fish (*nsomba*), fresh or dried, is much eaten, thirteen varieties being enumerated.
10. Chickens, ducks, wild birds that they may snare.

[1] Spirits used to be made by distilling from beer and banana-and palm-juice by means of a pot and a gun barrel.

4: Stannus D-5 (ca. 1909) 1910 FT7 Yao FT7
Maravi FR4

Gaga, the residue after pounding maize, is eaten by the women. No oils are used in cooking, but of fat and suet any native is very fond. Meat may be dried and smoked if in large quantity: flesh, fish and fowl is commonly roasted on spits; small pieces of chicken may be made into a kind of stew with beans and eaten as the relish. When on a journey the fire is commonly made against a tree. The cooking vessels are cleaned before use, not after. The fried fish eaten is often partly decomposed, and meat which is very high, even with maggots, is cooked and eaten, maggots and all. M Y 262 [252] [251] [984] [264]

Tabu.—Bushbuck is not eaten by many natives, as they say it feeds near graveyards. Fowls are not eaten by some, as this diet causes them to vomit; a snake-catcher never eats vegetables, and at the same time puts medicine on his hands. Many abstain from the flesh of certain animals as certain skin diseases are said to be caused thereby; all such diseases bear the name *wukwenga*. M Y [753]

A man who loses a relation by drowning takes an oath that he will never again eat fish, and never drink water from such lake, river, etc. Here the idea is of course simply to avoid eating part of the relation.

A Nyanja and Machinga will not eat the flesh of the hippopotamus, because on the body they say there are the marks of a string round the loins and of a mat on his back, adding that long ago he was a man. Animals of prey would never under any circumstances be eaten. Milk used never to be drunk by an adult, as it was said to cause a man to become as a child. A man would not dare to drink woman's milk as it was said he would surely die of dysentery. M [825] M [272]

Tobacco, etc.—The smoking of tobacco was a custom introduced from the coast. Chewing was general among Machinga and Yao men and women, while the Angoni and Mañanja snuffed. With the tobacco a little lime, made by burning shells, was taken in the mouth. Giddiness and sleepy sensations were experienced after chewing. The Nyasa and Awisa smoke a bubble-bubble, the water vessel being a large sausage-shaped gourd with a reed stem supporting a large bowl of *mbabou* wood, sometimes very nicely carved (Plate XXVII, Figs. 5 and 7). The Amyanja smokes a pipe with the bowl made of clay and the stem of bamboo (Plate XXVII, Fig. 6); these are made by the women. Tobacco is grown in nearly every village, a large-leaved rather coarse variety; it is sun-dried and rolled up into hollow rings 6 inches in diameter and 3 inches broad. For snuff (*Fodia wonunas*) the sun-dried tobacco is further dried over a fire on a pan, when cold it is ground on a stone with a smaller stone by the women, and with it is mixed some ashes of the *ngoas* fig-tree. M Y 276 [177]

At Blantyre I obtained a water-pipe made of bamboo stem; this was the water reservoir; a stem of reed supports a little clay bowl. The mouth is placed over the upper end of the bamboo. Bhang (*cannabis indica*) is smoked in a pipe of this kind.

AGRICULTURE.

The people live by cultivating the soil. Both sexes help in hoeing and planting, the collecting of the crops being mostly done by women. The hoe is the M Y 241

4: Stannus D-5 (ca. 1909)1910 FT7 Yao FT7
Moravi FR4

M Y 501 When a number are working they take time from the front man, the rear man steering with his ordinary paddle. The passengers sit in the middle, a chief towards the stern. They never lose sight of land even in crossing the widest part of the lake. Stones are now used occasionally as anchors up the lake; grass houses are made to shelter canoes. The smaller canoes are 2 feet to 2½ feet high, the very large ones used to be 4 and 5 feet high; except on the lower river, where canoes have ends similarly shaped, they are made with a bow more pointed than the stern and having a beak (Fig. 15). There is no ornamentation and no figure heads.

M Y [422] In every lake-shore or river-side village or collection of huts will be found one or more canoes; these belong to some one man, others using them paying a fee. At the launching of a new canoe, beer is made and the women dance, and medicine is made for its safe journey.

SWIMMING.

M 481 Not even all lake-shore natives swim, though most do. The art is learnt in childhood and not taught. They are not very fast swimmers, and I do not think could swim very far. They sometimes dive head first and practise staying under water. They swim rather like a dog, both arms coming a little out of water, but not a trudgeon stroke; arms are kept straight. They sometimes swim on the side, but never use the ordinary breast stroke.

GAMES.

M Y 524 Several games are played resembling the game of *ubau* introduced from Zanzibar (Mancala); *ubau* is played on a board in which rows of holes have been cut; beans are used as counters.

Mchombua.—A game found among Anyanja and Machinga; it may be played on a *ubau* board, but is often played in holes made in the ground with stones. The Angoni game *chipalapala* is played in the same way. At Fort Anderson is a lump of stone in which hollows have been made similar to those made in the ground. It is the only piece of stone-work I know in the country. Children and women play knucklebones (*mdodo.*)

A man tries in one breath to keep saying *mbiri-biri-biri* . . . ., while another makes a pile of stones from another pile of ten, taking one at a time, saying, "To take and put it there makes one," etc. Men play at guessing in which hand an object is hidden, or one out of ten men sitting in a house has to guess with whom a certain object is. No forfeits.

Tandande (=the spider) is cat's cradle.

Tiali (hide and seek), one hiding, five or six seeking.

M Y [177] There are no dice games. Cards were introduced from the coast before the advent of Europeans into the country; the games are various and difficult to follow

M Y 526 A slip-shod kind of wrestling is practised by Anyanja youths; the Machinga

7: Hetherwick M-5 (ca.1900) 1902 FT7 Yao FT7

SOME ANIMISTIC BELIEFS AMONG THE YAOS OF BRITISH CENTRAL AFRICA.

By the Rev. Alexander Hetherwick, M.A., F.R.G.S., of the Blantyre Mission, British Central Africa.

175 The original home of the Yao tribe may be roughly described as the large and lofty plateau which lies to the east of Lake Nyasa, and is bounded by the Rivers Rovuma and Lujenda. Forty years ago, about the time that Livingstone first entered the country, they began to be pressed on the north by the Magwangwara, and on the east by the Makuwa tribes. These invasions caused them to move, some westward down to the shores of Lake Nyasa or the banks of the Upper [131] Shire River, and others southward to the Shire Highlands, Mount Zomba and the eastern slopes of Mount Mlanje. In every case they succeeded in either subjugating or expelling the original Maravi or Mang'anja inhabitants of these districts, and in no case have they lost their own independence.

175 Till about fifty or sixty years ago the Yaos were untouched by any external influences, and when at that time the Arab and coast trader from Kilwa and 177 Zanzibar began to treat and trade with them they appear to have been little affected by contact with these visitors. Only a few of the younger men aped at [797] following Mahommedan tenets, and these they only grafted on to their still cherished belief in the old faiths of their fathers. The Koran, or a few of its texts, was added to the many other charms they had already hung about their necks. The faith which the first missionaries found them in possession of when they entered the country twenty-five years ago may therefore be held to be the unadulterated creed of the tribe from time immemorial.

774 The foundation of the Yao religion is to be found in the *liaolu*, the soul, shade or spirit which every human being possesses, and which is the inspiring agent in his life. They profess to give no definite description of the nature or characteristics of this soul. In their minds however it is allied with the shadow, and would seem to bear to the body the relation which a picture has to the reality. Their word for a shadow is *chiwilili*, which is also the term that they use to denote a picture, and pictures they associate with the shades or shadows of the dead. I have known natives refuse to enter a room where pictures were hung on [123] the walls "because of the *masolu*, souls, which were in them." The photographic camera was at first an object of dread, and when it was turned upon a group of natives they scattered in all directions with shrieks of terror. "The European,"

563 groups presents a problem to be considered but for the main purposes of this paper a brief comment is sufficient.

The Nyanja people who were allowed to remain in the areas, continued to live in their village communities in much the same way as the Yao did. In fact the Nyanja and the Nguru are so similar in culture to the Yao, that it was possible for them to fit into the Yao social structure fairly easily. For example, in Mposa's area Mbande and Mbeta are recognized by the local Yao sub-chief as important personages since they were the indigenous chiefs in the area before the Yao came in as invaders. Both, for example, have adopted [554] the Yao practice of wearing a red band round the head to indicate rank. Both have the right to conduct the Yao indigenous initiation ceremonies. At one meeting I attended Mbande was allowed [554] to sit in a chair while the only other person to do so was Mposa himself. This is a mark of honour since no commoner is allowed to sit in a chair in the presence of the chief.

In the same way the Nguru immigrants have come in small groups of matrilineal kin and have settled either in hamlets alone or set up small hamlets in close vicinity to kinsmen. Their headmen in turn have been absorbed into the general political structure though they have their own language and distinguishing cultural traits. Thus some Nguru initiate their boys according to their own *cidototo*, though others will allow their boys

[Text continues top of P. 151B]

V. THE POLITICAL STRUCTURE

642 177 The accompanying diagram is designed to summarize the main types of interaction that take place in the political structure of the three areas. Interaction between the social personalities in the political structure can be said to take place in reference to certain sets of values. One set of values is that which the Yao recognize and believe to belong to the White people. Another set of values they recognize and subscribe to as their own. A chief may interact with a village headman because he has broken a regulation which

[Text continues bottom of P. 151B]

563 to be initiated according to the Yao custom (*lupanda*). In general, the Nguru headmen are village headmen in the same way as the Yao are and they follow the same pattern in political behaviour.

563 621 At the moment, throughout the areas, the various tribal groups live in kinship clusters so that under one Yao administrative headman there may be two or three unrelated Yao kin-groups and possibly one or two Nguru groups living quite separately. Though the population in the area as a whole is mixed, usually the village groups are tribally homogeneous. So far little inter-marriage has taken place. I shall not here analyse this situation, though it is politically pregnant. In many ways the Nguru immigrants [711] are more progressive than the Yao. Most Yao in this area are professed Moslems and do not attend the local schools which are Christian. However, the missions have been more successful among the Nguru and they are becoming more educated and advanced. A good proportion of the Government posts in the area is filled by Nguru for this reason. This is most significant in the context of the general situation as will become apparent in the description below. For the rest of the paper I shall consider the political structure as I see it, in terms of the social personalities in the structure, and the presence of these non-Yao groups is implicit in the rest of this analysis.

V. The Political STRUCTURE

648 642 the Administration has persuaded the chief to pass and the full significance of which lies in 177 a system of European values. These systems of values are foreign to each other in many features. Opposition between the two groups, White and Black, must arise if their behaviour is affected by different sets of values. The Yao, for example, believe that most deaths are caused by sorcery and claim the right to take punitive measures against the sorcerers. The Whites do not believe in this and prevent punitive action against people

8:Mitchell E-5 (1946-1947) 1949 FT7 Yao FT7

[P.152]

DIAGRAM

SUMMARY OF POLITICAL INTERACTION IN YAO AREAS

648
642
177

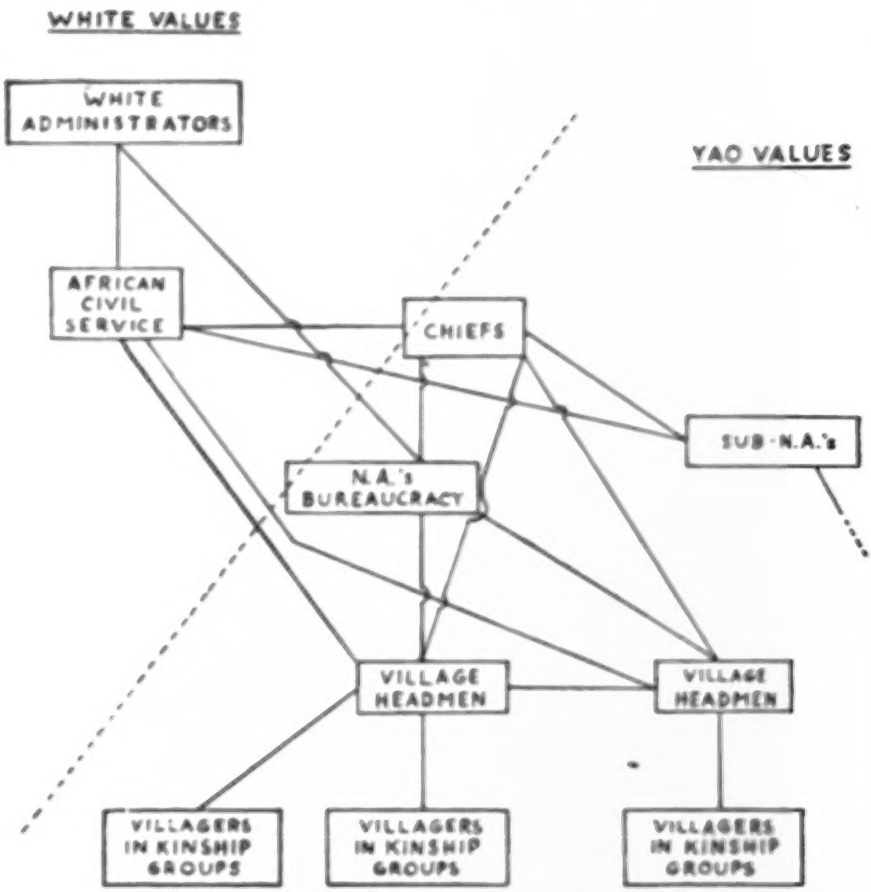

(Only the main lines of interaction are included in this diagram.)

648
642
177

who are, to them, innocent. The diagram has been divided obliquely to represent these two systems or fields of values. The division of the diagram into two parts depicts a major rift in local political relationships. While some political relationships, as say between village headmen, do not directly manifest this cleavage, in most, as say the chief with his subjects, though the Whites are not present in person, they are there in the context of the interaction. This will become evident as the analysis proceeds, but at this point it is sufficient to observe that the Whites and the White system of values are an integral part of the modern Yao political organization.

642
177
534
648

In addition to this, there is a hierarchy of status roughly conforming to the placing of the social personalities in the diagram, i.e., the White Administrator is of higher status than the African Civil Service which is roughly on the same level as the chiefs, but both are on a higher status than the Native Authority's clerk and officials are. The lines represent the main direction of interaction.

648
563

1. *The White Administrator and the African Civil Service*

By the White Administrator I mean the District Commissioners, Agricultural Officers and other Government officials who come into contact with the African populations, particularly in the rural areas. The social distance between a White person in general and the Africans is much larger than that between, say, an African chief and his meanest subject. Social interaction on an intimate basis cannot take place between chief and Administrator mainly because their relationship is dominated by the pattern of all South African territories, where White does not interact intimately with Black. I have already stated that not many Europeans come into the area. Those Whites that do come into the area are immediately accorded the status of an Administrative Officer and are apt to be thought of as such, though they may not be so. The Yao clearly recognizes that the Labour Recruiter is a different sort of person from the Missionary and both differ from District Commissioners, but

692 side the kin-group are usually settled by the arbitration of a local village headman or the chief. What decides whether a case is tried by a village headman or a chief seems to depend largely on the seriousness of the case and hence the amount of compensation that it involves. A quarrel between a village headman and his heir for example was settled by a local village headman, the compensation in this case being a matter of 2/- and a pot of beer. More serious cases are taken to the chief for arbitration and whether the cases are then tried in the court or not depends on the type of case. Certain cases are known to conflict with the system of values of the Whites. They are tried by the same court assessors and arbitrated in by the same chief who preside in the context of the Native Courts Ordinance, but they are handled by an entirely different procedure. Thus, a case involving the accusation of sorcery or the breach of a taboo leading to death and compensation claims is arbitrated on by the chief acting in terms of the indigenous value system. These cases take place outside the court-house, usually at the chief's hut, and are not recorded as a court case at all. The chief awards compensation in the same way but it is not recorded as in ordinary court cases.

Cases which are known not to conflict with White values are tried in the court-house if compensation of some value is involved. If we exclude from consideration the cases following a breach of the N.A.'s regulations we find that the recorded court cases are almost entirely about compensation for adultery, petty theft and assaults. Here the chief and court assessor function as social personalities acting in reference to a set

[TEXT CONTINUES TOP OF P.158B]

VI. GENERAL
Summary

642 177 I have tried to describe the political structure of the Yao in Liwonde, Kawinga and Nyambi sub-areas in terms of the interaction of social personalities in a structure briefly summarised in the diagram. The aspect of the social personality perceivable in set situations of social interaction

[TEXT CONTINUES BOTTOM OF P.158B]

692 of White values which coincide with their own.

Informants say that the position of the village
692 headman in contrast with that of the chief is
643 getting progressively weaker. They maintain
622 that cases once tried by the village headman are now taken to the chief's court. Whether this is true or not is difficult to ascertain. The fact that there is some sanction on the guilty party to settle the compensation if he is tried in the chief's court, probably pays a part. The compensation awarded is recorded in the Court Case book and the chief is empowered to keep a man under remand until it is paid. The chief sometimes supports the village headman against recalcitrant subjects. A man once refused to pay a compensation awarded against him by a village headman. The village headman referred the case to the chief who said to the man: "As you have disobeyed the order of the village headman it means that you have insulted me, the District Commissioner and the Governor". But in general there is a tendency for the central authority to be strengthened and the chief emphasizes his relationships to the White Administration in order to consolidate his position of dominance over his headmen. At a succession ceremony of a village headman the chief who had supported an unpopular candidate said: "This man has been chosen by me and the Governor agrees with me". Clearly in this insecure situation the chief saw himself against his subjects, and as part of the White Administration. He uses his power in this political situation to establish a dominance over the headmen, that he could never have established before the White men came (see p. 144).

VI. General
SUMMARY

642 depends on the field of values in which the inter-
177 action is taking place. To illustrate this with a simple example, when the court messenger exacted a levy of 1d. from each garden-owner in the area where the sacrificial cloth had been stolen from the tree-shrine, they saw in him a

R.Mitchell E-5 (1946-1947) 1949
[P.159 A] PT? Yao PT?

642
177

representative of the chief, acting as he was in terms of a system of values indigenous to the Yao. If during the same trip he informed the villagers that the village roads should be cleaned, to the people he would appear as a representative of the chief who is representative of the Administrator and is acting according to a value held by the Whites and embodied in a regulation governing the cleaning of village roads. Two sets of values intermingle in daily life and social personalities are seen first in this guise and then in that depending on the particular interactional situation. Thus the chief, when he is addressing villagers and village headmen, sees himself opposed to them and shows himself to the people as a representative of the White system of values and emphasizes his bonds with the District Commissioner and the Governor. Talking to the Agricultural Officer he sees himself opposed to the White system of values and opposes contour ridging, saying that unlike the traditional system of agriculture it encourages white ants in the gardens.

642
186

At the same time the White value system, symbolized to the Africans mainly by the Administration, is becoming an integrating force in their life. The otherness of the White system of values emphasizes the unity of their own. Formerly hostile, chiefs are now living at peace under the

9:Lawson Y-5 (ca.1940)1949 FT7 Yao FT7
MARAVI FRY

[P. 180C]

n 161 and Yao tribes, who there predominate. These
[174] peoples seem to have come from different parts
[197] of the continent. Their languages, despite a
common Bantu descent and much recent borrowing, remain as distinct as possible and are obviously not modern dialects of one more primitive tongue ; their original social structures must,
[177] however, have been similar enough to attract them to each other, for they have so intermarried and their customs so fused, that one can now scarcely distinguish their ways of life and village
n 101 organization. Indeed, while homesteads of apparently pure Nyanja and Yao still predominate,
619 every considerable district contains members of both tribes, with some people, at least, of mixed descent ; moreover, and although one perceive a difference of character and manners, and trace it to the influence of Mohammedanism on the
7 Yaos, one may well be unconsciously exagger-
[601] ting. This account of relationship terms, (with brief reference to underlying social structure), must be taken, therefore, to cover the fusion of two once-separate tribes, and Nyanja and Yao equivalents must—unless otherwise stated—be
n [177] understood as identical in meaning. In fact, Nyanja often prefer Yao terms to their own.

n How far can one isolate the Nyanja-Yao social structure in order to study it ? Ngoni
177 immigrants in this district are few, and their
602 original patrilineal social system has largely succumbed to the customs of these earlier comers. The matrilineal system of the still more recent and numerous Lomwe immigrants is, I believe, (though my evidence is fragmentary), exerting a considerable influence on the somewhat dissimilar but also matrilineal Nyanja and Yao.

9:Lawson T-5 (ca. 1940)1969 FT7 Yao FT7
[P.181A] MARAVI FRY

For the most profound influence comes from Europe. Modern large-scale economics engulfing primitive small-scale economics, legislation by Protectorate Government, contact with Christian Missions and with European ways of life and thought—these together are shaking Nyanja and Yao society to its foundations. Constructive elements they do, of course, contain, but rebuilding on the ruins has hardly begun. In order to understand the present with its problems and promises for the future, we must know something of the past; the traditional Nyanja and Yao relationship system is the key to this past which I would try here to put into your hands. It is not yet too late to grasp. The greatest changes began within living memory, and where village and family life has been revolutionized, relationship terms are still untouched. Hence, if we study the more conservative members of the tribes in the light of these terms, we should be able to piece together a fairly accurate outline picture of their original society. I make no attempt here to analyse in detail their relationship system: a study of the mutual responsibilities and interdependencies inherent in it, and the changes it is now undergoing, would require many years, and its results fill a large volume. This paper may, I hope, serve as an introduction to another's study, made before it is too late.

Nyanja society differs from any modern European social group in three ways: it is matrilineal; it is matrilocal; by the traditional practice of bilateral cross-cousin marriage, (i.e. marriage to the daughter of one's mother's brother, or, equally, of one's father's sister) its ties of blood and affinity have become interdependent.

Our English society, like that of the pure Ngoni, is patrilineal, the child belonging primarily to its father's family and the son inheriting wealth, social status and sometimes political power from his father. The Nyanja child, on the other hand, belongs primarily to its mother's group; a boy inherits social and political status from his mother's brother, and a girl from her maternal grandmother. These relatives on the mother's side arrange the children's marriages and have throughout life more authority and

10: Sanderson D-5 (ca. 1920)1922 FT7 Yao FT7

The men and boys now pass through the arch in order of seniority; each splashes 751
himself with the water in the trough, but neither speaks nor rinses the mouth. The 796
women come next, led by the head-wife of the chief; the latter rinses her mouth
and, instructed by the doctor, repeats a prayer similar to that uttered by her husband.
The remainder of the women merely splash themselves, like the men, before passing
through the arch. All then return to the village, where the *yapjila* is continued.

Finally the doctor takes the hammer-head from the trough and hands it to
the chief, who rubs the haft into it, and, a hoe having been placed on the ground,
goes through the form of forging the latter by beating it with the hammer. He
then scrapes the ground with the hoe as if clearing a plot overgrown with grass;
he does not dig with it as in hoeing up the ground for planting seed. After this
rite the chief again bathes in medicated water similar to that in the trough, and the
ceremony is complete.

Whereas the *yapjila* ceremony and its adjunct, the rite of the arch, are now [178]
but rarely performed, no Yao will omit the rite of purification after a death in his 751
family. This ceremony consists of two essential parts, both protective against 764
the *ndoko*, a disease characterised by dropsy and supposed to be contracted by 796
contact with a corpse, or by association, especially by sharing a meal, with those who 783
have been in such contact. The first of these parts is bathing in certain medicines,
which protects the bather from *ndoko*, and the second consists of a sort of communion
meal, shared by all friends and especially relatives with those who have been
contaminated, and designed to protect those friends and relatives.

The decoction for bathing is made by soaking the roots of *lupondondati* and 751
kandondo in water, together with the bark of *mkowere*, one piece each from the 783
east and west aspects of the tree; the water assumes a reddish tint, and the whole 824
body is bathed. 765

The communion meal consists of porridge made from any kind of flour or of [262]
rice, and some spinach leaves. In the latter some scorched and powdered root of
mtondwapilo is mixed, with a little salt. All near relatives of the deceased must
partake of this meal, as well as their wives and their near relatives; part is carefully
put aside for the use of any relative unable to be present at the ceremony.

Latterly, since the spread of Islam among the WaYao, this rite has become [177]
confused with the distribution of food to the poor at the funeral of a Muslim, and [777]
the Arabic word *sadaqa* ("charity") is now generally used for it, to the exclusion
of its wider, correct meaning.

It may be mentioned here that after the death of a child the father is denied 765
access to his wife for a period of about three weeks, and the first act must be one 787
of entire abstinence.

MEREDITH SANDERSON.

11: Sanderson D-5 (ca.1920) 1920 FT7 Yao FT7

RELATIONSHIPS AMONG THE WAYAO.

By MEREDITH SANDERSON,
Medical Officer, Nyasaland Protectorate.

Introductory.—Various writers have attempted to give English equivalents to the Yao terms describing relationship, or have alluded to the outstanding features of the system, but I am not aware that anybody has hitherto worked out the whole system. [12]

Although it is very similar to other classificatory systems, I feel that a description of it may not be quite valueless, more especially on account of the evolutionary changes that are taking place.

The WaYao are a Bantu tribe, exogamous but not totemic, which until the middle of the last century inhabited that part of Central Africa lying to the East of Lake Nyasa, particularly in the valleys of the Lujende and Rovuma rivers. Up to that time the tribe had not extended far from the area indicated except perhaps in a northerly direction, but owing to constant intertribal war in their own territory the Yaos then invaded and conquered a large part of the neighbouring territories, especially to the south, in what is now called Nyasaland. [10] [3]

I have said that the WaYao are not totemic, and that statement is correct at the present time. Opinions differ, however, as to how recent their loss of totemism is; though their initiation ceremonies are generally regarded as totemic, even there, in my opinion, the evidence is not conclusive, and there remains no suspicion of totemism outside those ceremonies. [19]

It should be mentioned that Islam is much more prevalent among the Yaos than among their neighbours, but its influence is not yet so deep-rooted as greatly to obscure the pure tribal customs, except to a certain extent among the rising generation. [19]

To facilitate description the relationships are given in tabular form, the relationship being given with reference to one man or woman. [12]

In Table I, Column 1 describes the relationship, Column 2 gives either the nearest equivalent of the Yao term, or, if none, the actual term. Columns 3-6 give the various relations of the person named in Column 1, as they would be named by the man or woman under consideration. [6]

For example, the brother of (a)'s father (Column 1) is regarded as (a)'s father (Column 3), the wife of (a)'s father's brother is (a)'s aunt (Column 3), their child a his "brother" or "sister" (Column 4), and so on (see Table I).

office tended to become hereditary. Each councillor had his own village which he 631
administered as a headman. A second set of officials were the court assessors, *mapungu*, who, unlike the councillors, were not in charge of villages of their own in addition to their court duties. Their office was not hereditary and they were chosen for their wisdom and their debating ability. They lived at the court of the chief and their main [692]
duty was to sift the evidence in the judicial cases which came before him.

The village headmen were expected to send elephant tusks to the chief (receiving [651]
small gifts in return), and to invite him to a yearly beer drink. Like the chief, the village headman governed through a council of the most important men in his village. They 631
constituted a kind of village court over which he presided, and in the old days he 692
could give capital sentence, or award a fine of as many as four slaves. Appeal from his decision lay to the court of the superior headman, or to the chief. Important cases would be reported direct to the chief. Most crimes would be settled by compensation. In cases of murder, several slaves were paid to the kin of the victim, and a fine for spilling blood to the chief. When compensation was handed over, the recipient always returned some part of it as sign that friendship was restored.[1]

Macdonald's further account of the treatment of crime shows how weak was the 696
political organization, in spite of the apparent orderliness of the system of inferior and superior courts. A murderer caught red-handed might be killed at once. If captured alive he might be ransomed on payment of a fine of from four to twenty slaves, [567]
some of whom might be killed to accompany the dead. If the murderer escaped a relative of his would be captured and ransomed. This applied to murders occurring among parties friendly to one another and living in the same village. If the murderer was from another village, the injured village, if strong enough, would fall upon the other and kill and enslave the inhabitants. If not strong enough, the chief might be called in to help to annihilate the guilty village.[2]

Modern Administration

631
In the whole of Nyasaland there must be between thirty and forty Yao chiefs. In 622
the districts of Liwonde, Fort Johnston, and Zomba, where 60 per cent. of the Yao 178
population is concentrated (1931 boundaries), there are at least fifteen such chiefs. Not all those who have the rank of chief in the old Yao system are recognized as Native Authorities or even as Sub-Native Authorities by the Nyasaland Administration, and many Sub-Native Authorities would be full chiefs in the Yao system, and quite independent of the Native Authorities under whom they are placed.

Nowadays the chief has lost many of his former claims to status. He no longer has monopoly of the trade to the coast, for goods are brought in by Indian traders and bought by African tobacco growers or returned labour migrants. He can no longer use his slaves to increase his wealth by running slaving expeditions. His tribute of food and ivory has ceased, and he can no longer entertain lavishly, but he is still expected to give burial cloths and to make gifts to headmen on their succession to office. Some of his councillors have been made court assessors, and are paid for those duties, but others are expected to work for him unpaid. Some chiefs do reward councillors who retain their traditional status but are not officially recognized as assessors by the

[1] Macdonald, 1882, vol. i, pp. 156–8; Bateman, c. 1922, p. 279.
[2] Macdonald, op. cit., pp. 170–1.

1: Tew E-4 (no date) 1950 FT7 Yao FT7

622 631 178 Administration, but many cannot afford to do this. The people regard the taxes they pay to the Administration as a substitute for the chief's tribute. As the Native Authority the chief appears to be responsible for tax-collection, as the tax-clerk lives at the court.

631 622 693 The chief is responsible to the Administration, among other things, for latrine construction and for punishing the infringement of various regulations. His main duties are judicial, as judge of the Native Authority Court. The bureaucracy attached to the Native Authority includes a number of functionaries, e.g. Kawinga's, in 1947 one of the larger courts, had 1 court clerk, 1 assistant court clerk, 1 community worker, 1 forest guard, 1 agricultural demonstrator, 1 sanitary inspector, 9 court messengers, 2 caretakers, 4 garetta men, 1 market clerk, 1 market sweeper, 6 court assessors. These are paid by the Native Treasury. Court assessors help in the arbitration of cases. The key position at court is held by the court clerk, and usually he is not a Yao, but an Nguru, who, because he is literate, is the medium of all written communications to and from the chief. The court sergeant is the correct channel of approach to the chief, and the court messengers represent the chief to the villages.

631 622 The territory of a Native Authority is divided into 'administrative villages', under officially recognized and paid headmen. Within these areas there are clusters of huts, which do not form officially recognized administrative units, but which are none the less villages under their own hereditary headmen. The administrative village headman is responsible for the payment of taxes in his area, and for the observance of various regulations. He is usually a man with some standing in the Yao social system: one who has the right to conduct a boys' initiation ceremony, or to wear the head-band signifying rank. His authority is derived partly from his status as a senior kinsman, partly from his status as a village headman. If the administrative village under him includes a number of hamlets unrelated to the administrative village headman, he will delegate his responsibilities in these hamlets to their own headmen. Consequently, since village headmen perform administrative duties, whether they are officially recognized or not, there is competition among them for the official posts. In order to bring pressure to bear on the chief to make him concede marks of rank, they may threaten to move out of his area, and so to deplete his following. In spite of this bargaining tool, the position of the village headman *vis-à-vis* the chief is said to be getting progressively weaker. Cases once tried by them are now being taken to the chief's court, and the latter is able to draw on the power of the Administration to establish his dominance over the headmen.

631 648 [117] The chief in the modern system stands as the representative of the people to the white Administration, and as the representative of the white Administration to the people. One reason for the lack of direct contact between the Administration and the people is the fact that Yao is not the official language of the district, and therefore Yao interpreters are necessary.

There are some occasions when the chief and his officials perform the functions proper to their office under the old social system. The white Administration is not concerned with their ritual functions, nor with initiation rites, nor does it take cognisance of witchcraft offences. Accusations of witchcraft are judged by the same personnel as accusations of theft or adultery, but they are not dealt with in the court house, nor recorded in the book.

2: Mitchell E-5 (1946-1949) 1956 FT7 Yao FT7

the last rite the owner of the oblational basket exacts a payment of threepence or so from each parent. The headman does gain financially from the initiation ceremony, but it would be wrong to imagine that this is the only reason why he should want to have the right to hold it. The competition for the rights, which are limited to a few, is part of the general political process whereby village headmen compete for privileges and advantages over their fellows.

Village headmen may hold either the boys' or the girls' initiation ceremonies, or both. Sometimes, when they hold both, they delegate the girls' ceremony to a younger brother or some other relative without referring to the chief. For example, Kawinga's clan relative and important retainer, Ngalawanga, had the rights to both initiation ceremonies, and he allowed his perpetual 'son' Isa [1] to hold the girls'. Also in Nyambi area, Majaja, who had both initiation rights, allowed his perpetual 'son' Nantunga to have the girls' ceremony. It is generally conceded that the right to hold the boys' initiation ceremonies is more valuable than the right to hold the girls'. H. L. Duff, writing in 1906, had also noticed this when he wrote:

> The respective ceremonies seem to be considered as on a somewhat different footing, for the boys' *inyago* can properly be held only at the village and under the patronage of, so to say, the paramount chief of the neighbourhood, whereas the girls' initiation may take place under the auspices of an inferior headman. This distinction is still jealously observed and any breach of the chief's privileges is apt to lead to bitter dispute.[2]

The sanction the chief holds over the headmen in this respect is mystical. A village headman believes that the initiation will be a success (that is, that the initiands will be free from the harm of wild beasts and illness, or the circumcision wounds of the boys will heal quickly and well), only if the approval of the chief's ancestors is obtained. He cannot hold the initiation ceremonies, unless he has obtained the basket from the chief.

Most people still follow tribal initiation customs, but in the extremes of the area in which I worked, religious ideas are bringing about a change. In the north in Jalasi's area where Islam

[1] The first Isa was the son of Ngalawanga and this relationship is preserved by the modern incumbents of the headmanships. See Chap. V, p. 122.

[2] Duff, H. L., *Nyasaland under the Foreign Office* (London, 1906), 312.

2: Mitchell E-5 (1946-1949) 1956 FT7 Yao FT7

881 is most powerful, there is a tendency for the Islamic initiation
178 ceremony for boys, *jandu*, and the Islamic initiation ceremony
795 for girls, *nsondo*, to displace the tribal equivalents, *lupanda* and
622 *ciputu*. These Moslem initiations are conducted by Moslem
554 teachers (*mwalimu*) and are not controlled by the chief. Though it also involves the circumcision of the boys, *jandu* is very much shorter and the boys are secluded for only a week. Some say it is becoming more popular because it is less expensive for the boys' parents. In Chiwalo's area the two ceremonies are run concurrently. The boys and girls go through the normal segregation rites at the beginning of the ceremony, but an *mwalimu* circumcises the boys according to Islamic practice. At the aggregation rites at the end of the period of seclusion, the star and crescent appears as one of the symbols along with the whale (*namungumi*), antelope (*mbalapi*), leopard (*cisuwi*), and the other tribal effigies which are shown to the boys. Christianity in the south has had a similar effect. The Missions actively discouraged initiation ceremonies in the past. Many of the people in Mposa's and Malemia's area have dropped the custom, or have integrated prayers and other parts of Christian ritual into the ceremonies, though circumcision is steadfastly retained. The effect of these changes is that the important ritual control the chief had over the ceremony has been undermined, and so the prestige attached to it has also begun to fade in these areas. What I describe about the prestige of village headmen and the rights they have to initiation ceremonies is only partially true, and is falling away daily. The correlation I seek to establish is also disturbed by the fact that among the Nguru there is a slightly different initiation ceremony (*cidodoto*) for boys. Most Nguru send their boys to the Yao initiations but there are still some who hold their own traditional ceremonies. These are not within the mystical control of the chief so that some Nguru headmen are outside the competition for the initiation rights. I should say, however, that most compete with the Yao for Yao initiation rights so that this factor is not as disturbing as appears at first sight. In addition, village headmen who move into a new area usually must obtain the permission of the chief before they may use the initiation rights they held before coming into the area.

622 There are other indicators of the general high rank of village
554 headmen. Junior headmen, like commoners, must give a special
576

2: Mitchell E-5 (1946-1949) 1956 FT7 Yao FT7

headmen is higher than among the Aborigines or the New-comers. It also shows quite clearly that the chief's direct relatives hold more of the privileges associated with rank than his clan relatives do, and they in turn hold more than his non-relatives. 622 554

The Political Process as a Struggle of Headmen Against the Chief

Modern chiefdoms appear to be organized on essentially the same principles as those described by Duff MacDonald. A chiefdom is headed by a chief and under him his subjects are organized in villages. Each village is represented by a headman, who stands in a relationship to the chief and to other village headmen, according to the prestige of the group he represents. This prestige is determined partly by his historical association with the chief in his past military exploits, partly by the size of his village, and partly by the prestige he has had in other areas. These elements were significant in Yao polity before the advent of the Whites, as we have seen from Duff MacDonald's description. Village headmen then were continually involved in a struggle for power among themselves and against the chief.[1] The struggle for power among village headmen continues to-day though in a changed context. Military power is no longer the object of the competition between them: the struggle for followers has become transmuted into a struggle for tax-payers. In harmony with the new political and economic situation a successful headman is not rewarded by military superiority, but by Government recognition and an official emolument. 643 622 554 178

At the same time, the chief whose power in the pre-White days resided in his armed forces, nowadays draws on the power of the White Administration to exercise his authority over his village headmen. His position is strengthened by Government decree and he does not hesitate to threaten to use it if necessary. Although the prestige of chiefs is higher than that of any of the village headmen, the difference in prestige between any chief and his most important headman is not very great. They are treated with almost the same deference by the minor village headmen and commoners, and they are referred to by the same term (*mwenye* = chief). The chief or an important village headman

[1] See Chap. II, p. 34.

The chief or an important village headman

[60] is usually addressed by a kinship term, either *baba* (father) or
643 *ambuje* (master or grandparent). When he is referred to, his
622 name is not used. Village headmen are owners or wardens of
554 villages (*aryene misi*) but only those headmen of some standing
178 are referred to as *mwenye*.

Important village headmen, like the chief, are in mystical
643 danger from pollution by death. They cannot come to the hut in
622 which a corpse is lying; and they cannot eat the chicken which
554 has been brought to them by relatives of the deceased to announce
761 the death. Like the chief too, an important headman may be buried in a tomb in his village and not in the graveyard.

But an important element in their relationship nowadays is
643 that the Administration will support the chief against a village
622 headman when it comes to a trial of strength, and that a headman
554 these days is precluded by modern conditions from setting up
578 chiefdoms as he did in the old days. Village headmen therefore
691 must struggle for power against their fellows and the chief within the modern Administrative framework. Some attempts are made to resist the power of the chief but these are rarely successful. The dispute between Liwonde and Ndenda illustrates this.

Ndenda was an Nguru headman, who in 1947 had 284 tax-payers under him (Liwonde, the chief, had 186 in his village). Ndenda had come into Liwonde's area before the White invasion and had surrendered with his relative Mlelemba, to Liwonde. The second Liwonde had given him both initiation rights but, unlike his relative, he did not have the right to wear a scarlet headband.

In 1938 or thereabouts, Liwonde decided to move his village site from the Shire River to its present site about half-way up the Great Rift scarp. He sent two of his young men to look for a suitable site, and to plant some mango trees there when they had found one. Ndenda heard of this and sent one of his men to take Liwonde's men into custody. He took their hoes away and then told them to go back to tell the chief they were planting in his (Ndenda's) land. In due course Liwonde moved up to his new site, and asked Ndenda why he had taken the hoes away and whether he owned the country, i.e. was the chief. Ndenda now argued that Mlelemba's ancestors had been given the rights of chieftainship over this area and that the first Mlelemba in the area had given Liwonde some elephant tusks for these rights. Liwonde replied that the chief has a right to tusks and that many had given tusks to him but were not entitled for that reason to rights of chieftainship. Liwonde handled this situation by calling a meeting of the village headmen in the area. They assembled

2: Mitchell E-5 (1946-1949) 1956 FT7 Yao FT7

of his malice towards him, might equally be called upon to do this. The person makes a statement to the effect that he bears no malice and hopes that the sufferer will be well. For example, a woman in Cikoja village who was called upon to 'blow water' during the labour pains of her mother's younger sister's daughter's daughter,[1] because they had quarrelled over a sifting basket, put some water in her mouth, spat it out and said: 'Those words I spoke: the basket is mine. This is my child. Both are mine. When I spoke and asked my child about it, they were not words to place in my heart, so that to-day we should have to go to the diviner because my child is hitched[2] and be accused because of the sifting basket. These words I push aside. I do not know whether there are other words that we fought about, but if they are these, my daughter's child come out!'[3] Sometimes the ancestors are specifically invoked, '*Conde, conde ŵamasoka* . . .' 'Please, please, O spirits . . .' This is a public confession of the tension within the lineage and it allows the lineage leaders to attempt to straighten out the difficulties, as they did in this case.[4]

These beliefs in mystical dangers of one sort or another which beset the matrilineage as the result of bad feelings within it, have the effect of constraining matrilineage members to maintain peaceable relations among themselves and are, therefore, conducive to maximum solidarity.

It is clear from MacDonald's writings that in earlier times the periodic offerings to the spirits of the ancestors was a valuable way in which the solidarity of the matrilineage was expressed. With the introduction of Islam and Christianity these sacrifices have disappeared. I have not worked in Christian areas long enough to be able to say whether the ancestor cult still persists. In the northern area, however, I can say that the ancestor cult survives as part of the practice of Islam. Periodically, feasts are held in

[1] See the history of the division in Cikoja lineage, pp. 165–6.

[2] *Kukolekwa*, i.e. the child cannot be born.

[3] *Une maloŵegala cisclo cila cangune. Aju mwanangu. Yosope yangune. Pinawecetaga nikwusya, kumbusya mwanangu, nginiwa maloŵe gakwika kuntima, gati mpaka lelo nikwenda kucisango cakolekwa mwanangu nikumkamula une ligonga lya cisclo. Celego ngututako. Kwalini nagapali gani getuwa kanganile nambo nagagaga maloŵe gakwe, cinukulu cangu cikopoce.*

[4] I have drawn attention to the cathartic effect of accusations of sorcery and public confession of guilt in a paper, 'A Note on the African Conception of Causality', *The Nyasaland Journal*, v, 2 (July 1952), 57–8.

2: Mitchell E-5 (1946-1949) 1956 FT7 Yao FT7

613 memory of the ancestors. These are called *sadaka*[1] and are
769 similar to those held at the end of the mourning period. They
are usually held when one of the lineage members has had a
●178 dream about an ancestor. The senior members are told of this and interpret it to mean that a feast in his memory should be held. The women cook a meal of mush and relish and on an appointed day the members of the matrilineage who live within a reasonable distance gather at the village of the senior section and share the feast. During this feast Islamic texts are chanted in Arabic. It is clear that in this situation the context of the meeting is exactly the same as that of the old offerings made by the lineage leader at the shrine-tree. The common ancestor is recalled and the matrilineage by meeting reaffirms its solidarity.

The Localized Matrilineage

613 The matrilineage may itself be localized in the form of a
621 hamlet or small village, as in Ali Kasunka village. It has 9 huts situated about half a mile from Chiwalo's court house in Kawinga's area. The genealogy, hut plan and census are set out in Appendix B. I summarize the genealogy here to show how the hut owners in the village are related. The village is about 300 yards across and about a quarter of a mile from the main road.

Ali Kasunka (C6),[2] the warden of the village, formerly lived in a village known by his mother's brother's name Msilo (B1). Ali Kasunka is the son of the chieftain Mposa in Kawinga's area. The village of Msilo still exists in Mposa area. Ali Kasunka and his sisters moved out of Msilo village and established a hamlet in Malemia's area near Zomba township. While they were there Ali Kasunka went to work as a domestic servant in Zomba. One day the sister of the cook in the household in which he was
[695] working came down to visit her brother. She became Ali Kasunka's second wife (he was already married to a woman from Malemia area) and lived with him in Zomba. She was the daughter of the present chief Chiwalo, and was living at her

[1] Sanderson says that this is derived from the Arabic word *sadaqa* which means 'alms'. Sanderson, M., on 'Ceremonial Purification among the Wayao, Nyasaland', *Man*, xxii, 55 (June 1922), 91–3.

[2] The reference number is to assist the reader to identify the person on the genealogy in Appendix B.

2: Mitchell E-5 (1946-1949) 1956 FT7 Yao FT7

621 this happens the husbands take their wives to their several villages with them.

Throughout this general process the links between groups of any particular area are constantly changing but the general pattern remains constant. A village expands outwards, and the various patrilaterally-linked groups, and often some of the segments of the dominant lineage, form hamlets separate from each other. The dominance of one of the local headmen over the others is still recognized and the general pattern of primacy is maintained. Some of the earliest villages in the area remain intact through many years. Villages which were small hamlets twenty or thirty years ago, when they had just moved into the area, have become relatively senior. Many headmen who were senior then have moved, or their villages have disintegrated, or ceased to exist. Other villages have moved in and are ranked lower. Thus through time the rank of any one headman may have changed, but the ranking system and the relationships of senior to junior headmen remain unaltered.

621 The general process is the same for the whole chiefdom,
622 though there is less overall structural change than in smaller
631 areas. The more important a village headman, the less likely is his village to disappear entirely. The most important village headmen, therefore, have long histories of association with the chief. Thus while there is considerable change going on at the lowest levels of the social system, the social structure of the whole chiefdom is remarkably stable. In other words, the rate of change taking place within the structure varies directly with the level of organization within that structure. The names of the *nduna* of Kawinga, Liwonde and Malemia are the same as those of the *nduna* who accompanied these chiefs into Nyasaland in the middle of the nineteenth century. Relatively few of them have disappeared. And so it is with important village headmen. The links between them, fixed by their rank and status relative to each other in perpetual kinship and other ties, form the political structure of the chiefdoms. From chiefdom to chiefdom the same pattern of organization is concealed behind an apparent diversity of actual links.

178 But, as a result of their contact with other peoples and their
622 absorption into the economic and administrative framework of
643 the British Empire, new social relationships are developing

2: Mitchell E-5 (1946-1949) 1956 FT7 Yao FT7

amongst the Yao. The religious sanctions behind tribal initiation ceremonies were weakened when many of the village headmen adopted Islam, and the rights of holding the Islamic equivalents fell to commoners who were leading Moslems. Thus for many village headmen the significance of the holding of initiation rights fell away. The White Administration has introduced new political personalities into the field, such as the court clerk, the court sergeant and other members of the chief's bureaucracy. These persons have been able to acquire peculiar positions of power in competition with the chief's traditional advisers.[1] Some wealthy individuals are able to wear better clothes, build better houses, and have more personal attendants, than the chiefs. For example, there is a carpenter in Kawinga's area living near an Indian store,[2] who is wheeled about in a garetta (ricksha) as the chiefs are, and who dresses far better than any of the chiefs.

But these changes have not yet affected the pattern of social relationships appreciably. Up to the present as new elements were introduced into Yao social structure they have been absorbed in terms of the traditional structure. The traditional chiefs, therefore, became the Principal Headmen when White Administration was imposed on them. Village headmen, no longer able to compete with each other in terms of followers and slaves, now began to vie with each other for 'books'. Important village headmen became the Moslem leaders, and the larger mosques were built at their villages. The chiefs, by virtue of their annuity from the Government, are able to maintain a higher standard of living than most of their subjects: they build burnt-brick houses, they wear finer clothes, they are wheeled about in garettas or, latterly, are pillion passengers on bicycles pedalled by retainers. By using their annuities as capital, they have been able to grow more tobacco than most of their subjects and so still maintain economic ascendancy over them.

So that until 1949, at least, in spite of the introduction of

[1] cf. my 'The Political Organization of the Yao of Southern Nyasaland'.

[2] He does not live in a village as most people do; he is an Nguru, and has none of his relatives near him, which is significant. His relationships with his clients are formal and transitory and he is not bound by traditional kinship ties. He therefore attempts to achieve prestige through conspicuous expenditure.

2: Mitchell E-5 (1946-1949) 1956 FT7 Yao FT7

178 new personalities into Yao society, the social structure remained
622 little altered. There were not enough Government officials, or
643 officials in the chief's bureaucracy, or rich individuals in Yao-land to be able to represent significant elements in the social structure. In the years 1946–49 Yao social structure was still organized in terms of ranked lineage segments at one level, ranked matrilineal groups at a second, and ranked villages at a third.

The men and boys now pass through the arch in order of seniority; each splashes 751
himself with the water in the trough, but neither speaks nor rinses the mouth. The 796
women come next, led by the head-wife of the chief; the latter rinses her mouth and, instructed by the doctor, repeats a prayer similar to that offered by her husband. The remainder of the women merely splash themselves, like the men, before passing through the arch. All then return to the village, where the *ppajila* is continued.

Finally the doctor takes the hammer-head from the trough and hands it to the chief, who refits the haft into it, and, a hoe having been placed on the ground, goes through the form of forging the latter by beating it with the hammer. He then scrapes the ground with the hoe as if clearing a place overgrown with grass; he does not dig with it as in hoeing up the ground for planting seed. After this rite the chief again bathes in medicated water similar to that in the trough, and the ceremony is complete.

Whereas the *ppajila* ceremony and its adjunct, the rite of the arch, are now [178]
but rarely performed, no Yao will omit the rite of purification after a death in his 751
family. This ceremony consists of two essential parts, both protective against 764
the *ndalu*, a disease characterised by dropsy and supposed to be contracted by 796
contact with a corpse, or by association, especially by sharing a meal, with those who 783
have been in such contact. The first of these parts is bathing in certain medicines, which protects the bather from *ndalu*, and the second consists of a sort of communion meal, shared by all friends and especially relatives with those who have been contaminated, and designed to protect those friends and relatives.

The decoction for bathing is made by soaking the roots of *lapulembati* and 751
lumlemela in water, together with the bark of *mkomaru*, one piece each from the 783
east and west aspects of the tree; the water assumes a reddish tint, and the whole 824
body is bathed. 765

The communion meal consists of porridge made from any kind of flour or of [262]
rice, and some *ngunda* beans. In the latter some scorched and powdered root of *mindanpelele* is mixed, with a little salt. All near relatives of the deceased must partake of this meal, as well as their wives and their near relatives; part is carefully put aside for the use of any relative unable to be present at the ceremony.

Latterly, since the spread of Islam among the WaYao, this rite has become [177]
confused with the distribution of food to the poor at the funeral of a Muslim, and [797]
the Arabic word *sadaqa* ("charity") is now generally used for it, to the exclusion of its wider, correct meaning.

It may be mentioned here that after the death of a child the father is denied 765
access to his wife for a period of about three weeks, and the first act must be one 784
of *coitus interruptus*.

MEREDITH SANDERSON.

11: Sanderson D-5 (ca. 1920) 1920 FT7 Yao FT7

The alternative term, *ewe*, common to nearly all Bantu languages, is usually reserved for "own father," but not always. 601

Latterly, though the relationship is really *ukwape*, the husbands of a man's "daughters" or "grand-daughters" are called *atati* in a complimentary sense, not of course in defining relationship.

The word *ukwape* is rapidly falling into desuetude for men, and is, nowadays, never used in speaking to a man of that relationship, though used freely as a mode of address to women.

Amao (or *ankilulu-wangu*, -*wao*, etc., "my, his mother") may be further defined as "great" or "little" in the same manner as *atati*.

The parents of any *atati* or *amao*, and those of one's wife are called *ambaje* ("grandparent"). Great-grandparents are specified as "father" or "mother of my grandfather (or mother)."

The founder of a family is called *Likulu*, especially in prayer—except for the augmentative prefix obviously the same word as *Nwapolo*," a parent," which includes all "fathers" and "mothers." [illegible]

It is curious in this connection that a name for little girls in general, if one does not know their real name, is *ukikulu*. All these words seem to be derived from *-kula* ("have," "possess"), and refer, probably, either to actual or potential possession of offspring.

Ankinampolo are distinguished as "male" or "female" according as they belong to the father's or mother's side—irrespective of their own sex.

Conclusions.—The Yao nomenclature of relationships, bearing as it does the evidence of former group marriages, is, like other classificatory systems, gradually changing in conformity with the development of the race, so that it can be used to express consanguinity; Rivers has, I believe, called attention to this process. 601 198 [illegible]

The Yao custom—now dying out—of lending one's wife to a visitor (usually a close friend) may be a remnant of ideas carried on from communal marriage, though such a privilege is never given to a relative. [illegible]

In the same way a man who has had no children (a great stigma) may request his friend to help him—he will never ask a relative—and all of the three parties will keep the secret of the true paternity of any children resulting. [illegible]

In many tribes the marriage of brother and sister, or a man with his sister's child, is permitted to compensate for the law by which a man's property goes to the son of a stranger, but nothing of the kind is allowed among the Yaos. Indeed, they view any incestuous union with particular horror, and such must be very rare. I have heard of a case of a man committing incest with the idea that he would thereby become endued with supernatural power, but all he gained was ostracism; in the old days he would have been burned. 588 535 [illegible]

11:Sanderson D-5 (ca. 1920) 1920 FT7 Yao FT7

4p8 It is becoming increasingly evident, however, that the law of succession is being avoided, not by extension of the number of marriageable relatives, but by laxity in the observance of the law itself. Nowadays the legal heir is never quite sure of his position, though, as a matter of fact, there is not now much competition for a position which, under European rule, is often exacting and yet unpaidable.

58 Moreover, owing to the abrogation of the drastic native laws regulating the sanctity of the marriage tie, marriages are becoming increasingly temporary in character. This is reflected in the system of relationship, as the relatives by marriage are becoming equally temporary.

1: Stanton D-5 (ca. 1912) 1922 FT7 Yao FT7

After the defeat of Kwetaja, Chikusi and his Angoni routed Kamtumanja, a brother of Malenya, who had also been making a nuisance of himself. Kamtumanja, who suffered from a large hydrocele, is supposed to have lost his balance on account of this impediment, and fallen into a stream where he had stopped to drink and to have been drowned. 175 167 648

The Angoni still burned for more warfare, and Malenya, fearing that with his work done, they might prove a nuisance to him, turned them on to the Amangoche Yao around Ilunziyu. Thither they set off on a raiding expedition and returned to their own country via Chiwindindo. This raid took place in 1884.

During the next few years, Kawinga, who had always held a grudge against Malenya for having got ahead of him to the best country, occupied the chief with raiding and warfare. In 1891, Wandaloma died, and was succeeded by Chimla, the son of his sister, Chingaro, and at the present time, he is the reigning Malenya.

It is of these Amachinga Yao under Malenya that the following notes are written. I have gone at some length into the history of these people in order to discuss criticism by those who, familiar with other sections of the Wayao, may not agree with all my statements.

Life History. Generally speaking, the life of the Yao native in the old days was full of zest spiced with the excitement of intertribal warfare. He cultivated his crops, kept a few goats and chickens, and relieved the monotony by hunting. Even domestic slavery was not a great hardship, nor did the Yao probably suffer from great slave-raiding to the same extent as many other tribes. As children, they are want to spend their days free from care, seldom reprimanded, and rarely or never physically chastised. During youth, the same easy lot is theirs, with the addition from time to time of a few small tasks; minor household duties for the girls, such as drawing water, sweeping the hut, and "minding" the baby, while the boys hoe or fetch and carry for their fathers in the village or in the bush. Left to their own devices, they play games, dig out rat/ nests, or shoot birds with bows and arrows. 161 ● 857

Now, as formerly, when they are about five years old, the girls usually go to live with their grandmother who may then have a number of children around her; or several girls of a somewhat more advanced age may sleep together in a hut dormitory. Boys of this age all live in a big hut called *ngombe ja chakwendo*, "the boys' dormitory." This is their quarters until one by one they leave to get married. The girl, similarly, remains in the girls' dormitory or with her grandmother until she is taken in marriage.

Puberty. The first interruption of this placid life of youth is the onset of puberty or the first initiation ceremonies.[1] Formerly, these ceremonies took place after puberty but of late years, as is pointed out elsewhere, they are performed much earlier. 631

Child betrothal. Betrothal in childhood or before birth is not uncommon. A woman learning that some friend of hers is pregnant will arrange that if a girl is born, her son will marry the friend's daughter, or a man taking a fancy to a little girl will select her as his 584

[1] Vide infra, p. 245. [2] Vide infra, p. 246.

2: Mitchell E-5 (1946-1949) 1956 FT7 Yao FT7

621 his mother was ill and had gone with Lupunje's younger brother to
626 the diviner to find out the cause of the illness. The diviner indicated
that Lupunje thought that Kalambo was not showing him the proper
753 respect. Lupunje knew that his sisters had lost their value in the
lineage since they had stopped bearing children, whereas Kalambo's
sisters were still reproducing. His malice had caused the woman's
illness. When Kalambo got home he asked his mother's brother to
blow water out of his mouth [1] and help him to prepare some medicine
for the sick woman. This Lupunje did and the woman recovered
immediately.

Shortly afterwards Kalambo remonstrated with his mother's brother
for causing the illness of his sister, but Lupunje said that he had no
control over it: the spirits had brought it on her. Kalambo knew
that he could do nothing and abandoned the idea of building his own
village. He knew that there was bound to be more illness if he
carried on with his plan.

182 Clearly the belief in the mystical powers of the ancestors or of
621 sorcery is a force which prevents sections from breaking away
626 from the village. A break follows only when opposition within
the village has reached sufficient pitch to force one of the sections
to take the risk of illness, rather than to continue living in the
village. Sometimes the dissident group comes back because
further deaths at their new village site convince them that their
action was wrong.[2]

Effects of the Headman's Personality

622 Whether a village maintains its unity or not, depends very
largely on the personality of the headman. This is why the
officiating headmen and others at the installation ceremonies are
so insistent that cases should be settled quickly. The main duty
of a headman is to maintain harmonious relationships within
his village and to see to the welfare of its members. All severe
[787] illnesses are immediately reported to him, and so are the results
of all divinations. He usually sends his representative to divina-
[764] tions concerning kinsmen not related to him matrilineally. He
is immediately notified of all deaths and he organizes the funeral
622 rites. Squabbles are brought to him for arbitration and even
692 where squabbles are settled by kinsmen in the village, usually the
headman is formally told of them. Frequently marriage diffi-

[1] An act which means malice. See Chap. VI, p. 139.
[2] See the case history in Chap. VI, p. 133.

6: Mitchell E-5 (1946-1947) 1949 FT7 Yao FT7

be noted that only 27—11 per cent. of the whole sample of 246 women—had never married and that 23, 85 per cent., of these (or 10 per cent. of the total) were under the age of 20 and therefore stood a good chance of yet marrying. Furthermore, 2 of the 4 women over 20 who had not married were known definitely to be incapable of marrying (one is insane and the other has violent epileptic fits).

There were 33 women who were divorcees or widows (13·5 per cent.), but it should be noted that 27 (or 11 per cent. of the 246 women) were over the age of 45 and therefore were past, or nearly past, the child-bearing period. Those in the younger age-groups stood good chances of remarrying. Table IV shows that though the divorce rate is high[1] remarriage is common. By the time a woman's child-bearing period has ended she has been married on the average 1·7 times. Few marriages are contracted after child-bearing ceases.

TABLE IV. *Marriages and Dissolutions of Marriage experienced by all Women over the Age of 15*

Present age	No. of women	No. of marriages contracted	No. of divorces experienced	No. widowed	No. still married	No. of marriages per woman	No. of divorces per woman	No. of marriages per woman ended by death of husband	No. of marriages per woman still existing
15-20	45	22	1	..	21	0·49	0·02	0·00	0·46
20-30	78	104	18	4	84	1·32	0·23	0·05	0·81
30-45	70	122	30	18	73	1·73	0·71	0·25	0·79
Over 45	51	88	29	34	25	1·70	0·57	0·65	0·48
Total	246	335	108	56	203	1·36	0·43	0·22	0·81

These statistics, showing the early age of marriage, the early commencement of child-bearing, the high incidence of marriage among women, and the high rate of remarriage during the child-bearing period, all point to the high valuation of reproduction reflected in Yao culture. This is consistent with their social structure, where the major corporate groups are kinship groups and reproduction is the principal method of recruitment to the group. Furthermore, because the standard of living is almost at subsistence level, children do not entail the economic losses they do in Western society. On the other hand, they are expected to support their aged parents when they themselves are economically independent. In other words, there are few factors militating against reproduction and many in favour of it.

We may expect the beliefs and customs surrounding child-birth to reflect the value of reproduction. For instance, the Yao distinguish clearly between women who have borne children and those who have not. When a girl becomes pregnant for the first time she undergoes a special ceremony (*kitão*) attended only by women who have borne children. This ceremony has many of the features of a *rite de passage* and appears to mark the passing of the woman to a new social status. Furthermore, women are ascribed status according to the number of children they have borne. The word *ammali* signifies a young woman who has not yet borne a child; *ammali*

[1] Between a third and a half of the marriages contracted by women had been dissolved by divorce by the time that the child-bearing period had ended.

1: Tew E-4 (no date) 1950 FT7 Yao FT7

expressed also in the speeches by the marriage sureties. The couple are exhorted to refer disputes to the sureties, and to consult the diviner in case of sickness.[1] After the rite these two sureties have special responsibilities towards the couple; grievances are referred to them, and they must be present when adultery cases are heard in court. If the marriage witness ceremony has not been performed, the relationship is not regarded as legal and no adultery compensation can be claimed by the husband. 585

Divorce used to be a private affair, which was merely signalized by one party giving to the other an arrow as a token of separation.[2] Nowadays all divorce cases go to court. The woman is usually asked to choose between her husband and the adulterer, and the compensation paid to the former, if she decides to leave him, is higher—amounting to about 10s. A man can be sent away from the village by his wife's kin, but if he has given no grounds for divorce he can claim compensation and will also take back any gifts made to his wife. A few small gifts to his mother-in-law are not reclaimed. Divorces are easily obtained and frequent. Grounds for the divorce of a man may include failure to pay hut tax, one of the specific duties of the husband. 586 [431]

The custom of making a marriage payment is recorded by Johnson[3] (on the east coast of Lake Nyasa) as a relatively new adoption. When given it is divided between the bride's father, mother, and mother's brother and brother.[4] 583 177

Slavery

Domestic slavery was an important institution in the Yao social system. Slaves were obtained by capture, purchase, or in compensation for injury.[5] A man would pay a debt by giving slaves (wives or members of his matrilineal kin group) to his creditors.[6] A man might voluntarily enslave himself to a man having charge of many women, as a means of obtaining a wife.[7] The children of a free man and a slave woman were not emancipated, as their father could not take them from the village of their mother's master, who had the right to sell them.[8] Slaves took part in the ordinary life of the village; women slaves ranked as junior wives of their masters and shared the usual work of women. Men might be supplied with guns for hunting or might accompany their masters to war, trade for them, spin, weave, sew, make baskets.[9] The institution of domestic slavery was an expression of a dominant motif in Yao culture—the association of status with a large number of dependents. Its abolition by the British was in itself a major blow to the prestige and authority of the chiefs. 567 [559]

Information about the social organization of the Yao in Portuguese East Africa is scanty, but it is in agreement with what is known of the Nyasaland Yao; Heckel, who knew the Yao in Lindi district, Tanganyika Territory, confirms the correctness of Stannus's account of the South Nyasa Yao. 184 602

The Yao came into Nyasaland in small parties of kinsmen. Their experience and their superior weapons soon enabled them to dominate the Nyanja among whom they settled, and today they dominate the population of the Southern Province. They are organized into loose groups of villages, under petty, independent chiefs. They seem 175 [621] [631]

[1] Stannus, 4, 1922, p. 223; Hynde, 1899; Johnson, 3, 1922, pp. 69-73; Macdonald, 1882, vol. ii; Werner, 1908, pp. 129-32.
[2] 1922, pp. 70-3.
[3] Stannus, 4, 1922, p. 280.
[4] Stannus, 4, 1922, p. 280.
[5] Werner, 1908, pp. 132-3; Stannus, 4, 1922, p. 237.
[6] Reigard, 1909, p. 122 (not a reliable source).
[7] Macdonald, 1882, vol. i, pp. 166-7.
[8] Ibid.
[9] Werner, 1908, p. 273.

3:Stannus D-5 (ca. 1912) 1922 FT7 Yao FT7

That these several sections of the Wayao differ in many respects may be seen by comparing the Amangoche of *Africana*[1] with the Amachinga of this article. I am not sufficiently conversant with the Amangoche to make a definite statement on this point but I am inclined to believe that after longer residence and wider knowledge, Macdonald would have found that some of his statements needed revision. Those whom he considered the "Yao proper" but whom I prefer to speak of as the Amangoche seem to have a considerable mixture of Anyanja, since their language contains many Chinyanja words and many of their customs are practically those of the Anyanja. I am of the opinion that the Amachinga may be regarded as more typical of the Wayao, and except when ambiguity might arise, I shall speak of them as the Yao.

The original home of this Bantu speaking people is uncertain; in historic times all the sections of the Wayao were originally grouped in that part of Portuguese East Africa around the hill called Chao, whence they probably derived their name, *Wa Chao* or *Wa Yao*. About the middle of the nineteenth century, as the result of inroads by neighboring tribes of Alolo from the southeast, and raids by the Makwangala, a branch of the Angoni of Zulu origin, from the northwest, disruption of the Yao people occurred, and the divisions mentioned above, moved toward Nyasaland. The Masaninga branch settled for the most part along the eastern shore of Lake Nyasa but a sub-section known as Tambala Yao reached the west side of the lake. The Machinga made a settlement near Lake Chiuta under a number of old chiefs, including Malemya (Nalutumbo), Kawinga, Chenkula, Kalimbuka, and Mazin.

The descents of the Makwangwala again caused the Wayao to move on from Chiuta to Nanninga on the Mikoko stream. Here Malemya suffered another defeat at the hands of the Angoni; many of his people were driven off and taken to the neighboring Anguru country where they were held in captivity for some time. Finally they were restored by the enterprise of one of Malemya's old men, Kulungala, who went alone to the Angoni, saying that he wished to live with them and with his own brethren. One day, he asked the Angoni if they would like to see their captives dance, and when they assented, he called the Yao together, and clapping his hands to keep time, he began to sing one of their dance songs. Gradually he gathered all the Yao into the village open space, dancing and singing; then, keeping to the same air, he told them why he had come, using their own language which the Angoni did not understand. "Malemya, our chief, remains at the Mikoko stream. It is not far off. We must all join him again. Now dance for joy. If anyone does not return there, it is his own fault." Then, a few at a time, the dancers left the crowd and stole away into the bush and, as night came on, they all made off and reached Malemya's camp in safety.

Malemya's people were again attacked by the Angoni, and on this occasion they defeated their enemies. The Angoni retreated and skirting Zomba mountain, reached the Shiré

[1] Macdonald, op. cit.

7: Hetherwick M-5 (ca. 1900) 1902 FT7 Yao FT7

Unkulunkula, which may therefore be rendered as "The old, old One," or "The great, great One." A like rendering may be given of the Yao form *mulungu*, the "Old One," or the "Great One." In this or a modified form *mungu* (Swahili) it appears in all the Eastern group of the Bantu tongues as the equivalent for "God" (see Father Torrend's *Comparative Grammar of South African Bantu Languages*). To trace it as Father Torrend does to any connection with Moloch, the god of the Phœnicians, is to attach undue weight to a chance coincidence of sounds.

As we have already seen, the word *mulungu* is applied to the human *lisoka* when regarded as an object of worship, or as an inhabitant of the spirit world. But it is also used to denote that spirit world in general, or more properly speaking, the *aggregate of the spirits of all the dead*. The plural form of the word is rarely heard, unless when the allusion is made to the souls in their individualities. In its native use and form the word does not imply personality, for it does not belong to the personal class of nouns. Etymologically it is classed with the leg, heart, arm, head, etc., of the human frame. Its form denotes rather a state or property inhering in something, as the life or health inheres in the body. Among the various tribes where the word is in use as we have described, the missionaries have adopted it as the term for "God." But the untaught Yao refuses to assign to it any idea of being or personality. It is to him more a quality or faculty of the human nature whose signification he has extended so as to embrace the whole spirit world. Once after I had endeavoured to impress an old Yao headman with the personality of the Godhead in the Christian sense of the term, using the term *Mulungu*, my listener began to talk of "Che Mulungu," "Mr. God," showing that originally to him the word conveyed no idea of the personality I was ascribing to it.

And yet the Yao approaches closely to the idea of personality and a personal being, when he speaks of what *mulungu* has done and is doing. It is *mulungu* who made the world, and man, and animals. Far in the interior of the continent, toward the north-west, beyond the plains and swamps of the Loangwa River and Lake Bangweolo, there lies, in Yao legend, an island in the midst of a lake called Kapiritimya. On that island there is to be seen a large flat rock marked by the footprints of men and animals of all kinds. When that rock was once a heap of moist clay, *mulungu* created all living things and sent them across the soft mass, where their footprints remained to be afterwards hardened into the imperishable rock. Such is the Yao legend of the creation of the world, and *mulungu* is always the Great Creator.

Mulungu is also regarded as the agent in anything mysterious. "It's *mulungu*," is the Yao exclamation on being shown anything that is beyond the range of his understanding. The rainbow is always "*mulungu*," although some Yaos have begun to use the Mang'anja term "uta wa Lesa," bow of Lesa.

Offerings are made to the spirit world or to *mulungu* as the great agency in the affairs of human life. Outside the village, or beside the headman's hut, may often be seen a rough shed. In this are placed the first-fruits of the new crop,

642 177 representative of the chief, acting as he was in terms of a system of values indigenous to the Yao. If during the same trip he informed the villagers that the village roads should be cleaned, to the people he would appear as a representative of the chief who is representative of the Administrator and is acting according to a value held by the Whites and embodied in a regulation governing the cleaning of village roads. Two sets of values intermingle in daily life and social personalities are seen first in this guise and then in that depending on the particular interactional situation. Thus the chief, when he is addressing villagers and village headmen, sees himself opposed to them and shows himself to the people as a representative of the White system of values and emphasizes his bonds with the District Commissioner and the Governor. Talking to the Agricultural Officer he sees himself opposed to the White system of values and opposes contour ridging, saying that unlike the traditional system of agriculture it encourages white ants in the gardens.

642 186 At the same time the White value system, symbolized to the Africans mainly by the Administration, is becoming an integrating force in their life. The otherness of the White system of values emphasizes the unity of their own. Formerly hostile, chiefs are now living at peace under the

8:Mitchell E-5 (1946-1947) 1949
[P.159 B] FT7 Yao FT7

642
186

Administration. Africans are becoming increasingly aware of their position in the British Empire and in the world in general. The trips of labour migrants to South Africa and Southern Rhodesia have emphasized this since Yao from formerly hostile groups, Nguru and Nyanja alike, were all classified as "Nyasa boys" and in the situation of being amongst vastly different tribes at these labour centres they have begun to see themselves as a united people. Also during the war there was a high recruitment rate in Nyasaland and since the 1st and 2nd KAR are recruited from Nyasaland, this heightened the feeling of belonging to a new political entity—Nyasaland. The new feeling of unity of Nyasaland people is felt most strongly by the younger people who have been out to work and who have been in the army. This feeling is also strong among the more educated who now read African newspapers from Southern Rhodesia and South Africa in which columns are set aside for "Nyasaland News". Symptomatic of this is the development of associations of a semi-political nature especially among the more educated people—the clerks and the teachers—organizations which cut right across the old tribal barriers, and which are serving to integrate the whole of the African population into a united political body.

648 nevertheless the type of behaviour which is normal
563 between Labour Recruiter and African is dictated by the pattern of behaviour of African to Administrator. The Yao find it extremely difficult to separate out their attitudes to these different types of social personalities and the main reason is that they tend to categorize all White people into a general class "Whites" of whom the most common representative to them is the Adiministrator.

647 It is, however, impossible to consider the Administrator without reference to the African
648 Civil Service. I am using this phrase to mean those Africans who are in constant and direct interaction with the Administrator. I include the clerks, interpreters, messengers, policemen, and other intermediaries between the Administrator himself and the people. Probably of major importance is the interpreter who speaks directly to the people on behalf of the Administrator. In Southern Nyasaland the official language is Nyanja and officials are expected to learn it for their official business. Some of the Yao men
[191] in the area under study can understand and speak Nyanja but some men cannot and certainly most women cannot do so. Therefore, the tendency is for the Administrators to make use of interpreters in dealings with the Yao and other peoples in the area. The Administrators do not interact directly with various social personalities but do so rather through either their own civil service or through the N.A.'s Bureaucracy who, being educated, are able to speak and understand the official language. The Administrators are in direct interaction with their own Civil Service and only in indirect interaction with the other social personalities in the political structure.

The African Civil Service stands for a set of White values and for this reason is placed in the "Whites Values" part of the diagram.[7] The African Civil servant represents the District Commissioner or Agricultural Officer to the tribesman. The Tax Clerk, while he is collecting taxes, is part of the system of the Administrator. The Agricultural Capitao (African official) represents the Agricultural Officer to the villager when he instructs him in the building of contour ridges.

7 [See p.152 — Analyst.]

3:Stannus D-5 (ca. 1912) 1922 FT7 Yao FT7

and uncles as well. I am inclined to believe that the words primarily refer to a person's maternal and paternal relatives whose children bear the relationship of wanko to the person. A strange point, however, crops up, namely, that the paternal aunts are called atati (atati wakupse) and their husbands atati again. 601

An elder brother is ahulu, his younger brother mpunkue, a sister nhumbu, nhumbu wanondi and nhumbu wakulunpse, younger and elder sister.

Disease. Apart from old age, the native recognises in all illness and death the hand of an enemy or the result of transgression of some custom: some one has made medicine against him, or he or some one else has broken a custom founded on superstition which is visited on his head. These ideas are so deeply rooted in the native mind that it is with difficulty any appropriate treatment will be received. They rely, rather, on some medicine-man to cure them by medicine more powerful than that made against them. Even an ordinary accident or an attack of pneumonia is accounted for in this way. 753 754 164

The names given in speaking of sicknesses are, of course, applied rather to symptoms, but in some cases where the symptom named is pathognomic of a disease, the word practically stands for the disease. The word used may imply the supposed cause or refer to a resemblance to some object, or again simply state the part affected; thus chitumbe (the belly) meaning stomach ache, mose (eyes), conjunctivitis, etc.

The following words most of which are found in the Reverend Dr. Hetherwick's *Yao Language*, give some idea of the Yao native's conception of disease. The sense which the above authority gives is not always quite the same as I would venture to give. I shall not enter into the question of the diseases as such but only in so far as they bear on customs, etc.

The word *chikuole* signifies any disease or illness; *chilepe* and *chipindupindu* refer to epidemic diseases; the former refers to a disease of fowls and dogs characterised by wheezing and hence is occasionally used for bronchitis in man. *Chipindupindu* refers to a series of deaths from a cause unknown to the natives. The word *chauole*, which Hetherwick gives as meaning a plague, rather means arrow poison, I think. 164 753 192

Chumbule: a liver disease of fowls.

Chipupe: a congenital deformity of any kind (*kupupse* = to be born with).

Chilumime: a patch of white hair on the scalp of congenital origin.

Chisisumi (a cousin): the word used for a birth-mark or freckle; hernial fistula is also included. Children examine each other to see how many "cousins" each has; anyone with none is made fun of.

Chindumbumali (*tumbumale* = a big lump): a hunchback.

Chimbule (*ku-umbule* = to split): a "splitting" headache, or more commonly, medicine by means of which the possessor can inflict pain or death.

Chinj'alang'ale: a localised pain in the head.

Chipungupungu: giddiness.

3: Stanmus D-5 (ca. 1912) 1922 FT7 Yao FT7

164
753
192

Chibuli: deaf and dumb (Chin); the word is used in slang to mean impotence.
Chiviudu: an old word meaning high fever.
Chilundulundu: "*wakupwa wawile chilundulundu,*" the woman died in confinement without giving birth (incipient). The sense of dumbness and constipation are secondary.
Kubhlhu: constipation.
Mahundupuli: colic; *Mapupu*, rumblings in the bowels, borborygmi.
Mandindili: "pins and needles."
Chiwuu: sore and swollen gums, pyorrhoea; has been translated scurvy.
Chipupuhulutu: hardened skin, like a corn on the hand.
Njumbu: without eye-lashes, as result of disease.
Ndundupuni, Lumpundini: indistinctness of vision (Hetherwick).
Lumso: watering of the nose; nasal catarrh.
Mamboko: the secretion at the corners of the eyes in the morning, also the purulent secretion of conjunctivitis (Hetherwick translates "watering of the eyes").
Nawile: nasal mucus.
Chimbundupulu: crusts from the nasal passages (Hetherwick translates merely "nasal mucus").
Lihumulu: cough.
Chimupupu: after-pains of labor.
Npulusi: hiccough.
Ng'ussung'ussu: nystagmus, from a verb meaning "to look from side to side sinisterly."
Iwupu: any skin eruption supposed to be due to eating various substances, chiefly meat.
Ku-hilimuka: to have a rash on the body of the nature of urticaria.
Npululu: the name of a condition in which the place where a man passes water becomes whitened; hence it refers to cystitis, lithuria, etc.
Chikwukwu (*Ikwukwu* = a snail): the white on the ground resembling a snail track left by a man with *Npululu*.
Ndusi or Milli: smallpox.
Ndungulu or Kazubulu: chicken pox; this term may also include other diseases with similar rash, i.e. modified smallpox and pemphigus.
Chiwulu (*ulwulu* = an elephant): elephantiasis.
Matuwa: leprosy.
Mapuwapuwa: yaws (*chimuhili*, given by Hetherwick as "rodent ulcer," is a Chinyanja word for yaws).
Chindulu: (Swahili) syphilis.
Chimuwu: (Swahili) gonorrhoea.
Lulubilulubi: whooping-cough.
Chilulu: measles.

3: Stanton D-5 (ca. 1912) 1922 FT7 Tao FT7

164
753
1920

M'wera: antlope.
Chindule (*ku-ndule* = to scrape out): diarrhoea, dysentery.
Chipunge (*ukunge* = warding): swelling at angles of jaws, mumps.
Lisendike: nasal or bronchial catarrh.
Mundu: insanity; mumpumpu, delirium of fever (Hetherwick translates as periodic madness).
M'ndu: malice.
Likhomise: goitre (Kikuliu: *pumu ukoma*).
Nduwumbu: leucoderma of hands and feet.
Chimupupulu: a pustule.
Chimudulutu: a boil.
Chilunga (*upunga* = the spotted guinea-fowl): ring-worm of face.
Limuma: any mark on the skin, e.g. birthmark, pigmented spot, ring-worm, scar.
Bumuma: a wart.
Nduudi: a burn of the skin.
Lipulumu: a keloid scar (Hetherwick gives "boil").
Lumpu: a rash after shaving.
Libuku: a blister.
Chipulumu: a wheal after a blow or an insect bite.
Chilipu: oedema of a limb.
Chipupu: whitlow.
Lipulu: an abscess; mumu, pus.
Lilindupu: an abscess; (*ku-undu*: to swell).
Limunpu: a sore or ulcer.
M'bumpumpu: a chronic ulcer.
Lisisubila (*ku-upula* = to come to life again): an ulcer which heals and then breaks out again.
Lilimbulipu: secondary enlarged glands in groin or elsewhere from a sore on the foot, etc.
Nduti: Any freely movable lump under the skin, e.g. sebaceous cyst, pimple, ganglion, etc.
Chilumi (*ku-luma* = to bite): abscess.
Upuru: itch, scabies.
Tundu ndumumu: thrush.
Lumpu: diarrhoea in infants with green stools.
Lulumu: passage of blood in urine; Urinary Bilharziasis.
Ng'ulu: ulcer or lumpus of scrotum.
Ching'ang'u: rabies in dogs.
Lisiklini: round-worm of man.

.3: Stanzus D-5 (ca. 1912) 1922 FT7 Yao FT7

164 *Mongongolosi:* round-worm of dogs or found in the ground.
Wakongwe wajumu: a barren woman (lit. dry).
753 *Chisungulu:* sterility in the male.
● 192 *Chipungulu or pyo:* an impotent man or *Mundu fwa ipyo:* a useless man!
Mpuli: impotent.
Mchau (*ku-chava* = to cut off): a "cut man"; a man soon after he has been castrated.
Mkungu: a eunuch after he has become fat.
Nambundiru (*nalimuimui* Chin.): the word is derived from *kubunda*, to ulcerate. Natives say that when disturbed, the insect of this name which is a locustid, *Rhapidopsis durandi*, makes water which falling on the skin of the passer-by causes ulceration. I have seen a variety of cases of extensive ulceration due to syphilis, etc., assigned to the effects of this insect; I have, however, shown that it does secrete a corroding fluid from pores at the sides of the body which dropped on to the skin will dissolve the superficial layers of the epidermis and should such abrasions become infected, ulceration may, of course, result.
Ulendu: tremor, similar to the movements of one of the wasps.
Manjenje: tremor of old age, *paralysis agitans.*

164 The preceding short list of words will give some idea of the richness of the language in
192 some directions and also its limitations. There now follows an account of diseases which are
753 based on superstition, generally connected with the idea of uncleanness or the transgression
68 of some rule of life. Whatever the symptoms, if there has been a transgression, the disease is labelled with the name of the disease supposed to follow the act. Similar diseases are to be remarked among the other tribes in the country; some of those relating to the Anyanja I have already mentioned,[1] and the following may be read as an amplification of the remarks previously made.

Chingwa (*Fungwa* Chin.) from *kungu*, to defecate: At the birth of a child, if the contents of the bowel (meconium) are passed before the body is born (as often happens in breech presentations), the child is said to be "born with disease." One of the women attending the confinement will always go out and inform the husband of what has happened, saying, "*Apali 'ohwema*," (it is born well) or "*Apali ni chilwala*," (it is born with disease). This only refers to the passage of meconium and not to any antenatal disease.

When this significant event has happened, the husband may not occupy the same sleeping mat as his wife and have intercourse with her until the child of its own accord crawls from the mother's sleeping mat to that of her husband on the other side of the hut; *Kupitiqa mwanake ku mapwa* (*Ku-pitiisa mwana ku mpwa*, Chin.) = "to go the child to the mat." Should the husband disregard this custom, he will sicken with *Chingwa*. The symptoms commonly ascribed to *Chingwa* are pain in the loins and in the hypogastrium.

[1] "Notes on some tribes of British Central Africa," op. cit.

3:Stanner D-5 (ca. 1912) 1922 FT7 Tao FT7

This has led to the word being translated as Bright's disease (Hetherwick). No symptoms referable to the pudenda are included under this disease. *Mawa* (Chin. *Kapunda*): hydrocele; said to be another sequela. A woman soiled by the movement of her infant after birth is not considered unclean and intercourse will have no ill result to the husband. Sometimes in the event of *Apuli ni chilunda*, recourse is had to the practice of intercourse between the woman and some other man. She is thus rendered "clean" and the man who is not her husband will not sicken. Such a man is called *Lihusa* (see Widowhood).

Lowoo: a disease similar to *Chiopwa*, which inflicts a man having coitus with his wife who has not been cleansed after abortion.

Kwisimula: a practice indulged in if a new-born child falls ill; the word refers to the "hardening" of pots when they are being made and the same idea is applied to the child. If the new-born child gets fever, the illness is ascribed to the *mawunda mpitiliwa* about the vulva of the mother. These are cut off by an old medicine-woman and the blood allowed to drop into a mortar; water and some leaves are added and pounded together, and the mother attired only in a cloth reaching to the loins, washes her breasts with the liquid while the baby is supported on one thigh; the child is then given the breast and the mother, turning her back on the mortar, pushes it over backwards with her buttocks.

Ya njala (from nsik; Chin., *dao nsikwa*): If a woman who, after the death of a child, has not been cleansed by medicine, adds salt to her husband's food, he eating it will sicken.

Tsempe (a Chinyanja word): If a man or a woman commits adultery and any member of the family falls ill, the natives say the illness is due to the unlawful act; the sinner is said "to have gone in front of the other"; *kwapunda* (*mpundwa*, Chin.), "he has gone in front of," from *ku-punda* and *ku-pundwa*, to go in front of, or *ku-mpita* (Chin.), to go slyly in front of. Hence the word *tsempe* which also is used loosely for *dao nsikwa*. If a child who according to custom has gone to stay with the grandmother, returns to the parents' house and the parents continue to have sexual intercourse, the child may sicken; it is said that the house is "hot" for the child and its disease may be called *tsempe*. Or if a child which has been weaned is again given the breast after the mother has resumed cohabitation with her husband, it may sicken with *tsempe*. And the husband is called *kwapunda*.

A child which is suckled after menstruation is reestablished, is not affected by any untoward symptoms.

In the event of a woman dying in childbirth, if it so happens the husband has committed adultery, he is held responsible for the death and her relatives claim very heavy compensation.

Ku-simunikwa, to be met with (*ku-kumunikwa*, Chin.): If the act of coitus causes the onset of menstruation and the husband cannot draw back in time to prevent himself being contaminated, he will sicken, and he is said "to have met with (it)" when returning to his illness. In this disease, the penis is said to withdraw into the bladder. Rest from the roof

3: Stanton D-5 (ca. 1912) 1922 F77 Yao F77

161
192
753
688

of the hut, *ulwipidi*, and the red part of the flower of the banana, doubtless on account of its shape, are used as medicine for this disease.

Kwindumpwa or *Ndoko*: If a man dies and his relatives eat of the food-stuffs left by him, such as corn from his grain-store, before they have been cleansed by medicine, they will sicken with ndoko, the symptoms being anaemia and wasting. The word *kwindu ndoko* is also used for sickness due to partaking of food cooked by an unfaithful wife.

Chiputo is a word used by both Yao and Anyanja to denote a disease which a man contracts from adulterous intercourse. Scott[1] derives the word from *ku-puta*, to stick to; the woman is so influenced by medicine made by her husband that should any man have adulterous intercourse with her, the disease will "stick" to him, while it will not affect the woman herself nor her own husband. Both the disease and the medicine made to cause the disease are known as *Chiputo*. Secondarily, the word has come to be used for any disease which may be gained by sexual intercourse and is sometimes used as a general term for venereal disease.

Chiputo cha chipula (*chipula*, a knife): A man who is going away from home obtains medicine and doctors his knife with it. As he leaves his house to go on his journey, he pretends just to remember his knife and calls for it. His wife brings it to him and it is put into its sheath; he then goes out and sticks it in the grass of the roof of the house. The medicine is made from the tail of a dog, an animal in which coitus is prolonged and the two animals cannot separate. Should the wife commit adultery, it is supposed that just as the knife was unsheathed and doctored with dog medicine, so the adulterous pair will remain fixed in coitus and be found out. This may be called *chiputo cha kutega* (*kutega* = to set a trap).

The Anyanja make medicine with the same idea, *chiputo cha kuchera* (*ku-chera*, to set a trap, Chin.); medicine is put round the house and any man crossing the threshold and committing adultery with the wife will be trapped. In all cases, the man will become ill.

Chiputo cha mtuni, *mtuni*, blood (*mwami*, Chin.); disease caused by intercourse with a menstruating woman. Blood is passed in the urine.

Chiputo cha wuwu, *wuwu*, pus (*mafuqua*, Chin.): genitually venereal gonorrhoea.

Chiputo cha kinyji, *kinyji*, cotton (*pinja*, Chin.): the discharge from the urethra resembles a thread of cotton; it is supposed that this thread can be pulled out endlessly.

Chiputo cha nchuchu, *nchuchu*, the white-ants (*chiuza*, Chin.): so called when a man passes whitish-yellow debris in the urine. It is supposed that when he has finished passing water, white ants rush up the penis and enter the bladder, thus causing the pain which characterises this affection. The origin of the idea lies in the fact that if one sprinkles water or urinates on the ground near white-ant burrows, the ants will come to the surface of the ground in numbers and make a rustling sound.

[625]

[1] D. C. Scott, a syntactic dictionary of the Mang'anja language, sp. ch.

Other hypothetical diseases which are caused by disbelieves in custom are mentioned under various other headings. *Kwiyo*: a disease generally characterized by shortnessof the legs but in some cases by pains in the back, or loosely used for a variety of symptoms, is said to be caused by the entry into the body of a worm which lives in water-pools. This worm which I have had identified is a gordius worm and not known to be parasitic in man. *Lomi*: When a man kills another in battle, he will slit open the belly of his victim; otherwise he believes he will sicken with heat and his own belly will swell up like that of the corpse when putrefaction sets in. He is supposed also to hunger after more killing and blood. *Lihunge* is the name of a supposed disease which kills off one child after another in a family when they are about six months old. Congenital syphilis naturally suggests itself but I have never been able to verify this idea. *Lihunge ipe hutuin*: a supposed disease which causes the death of the first child when the second is born, the second when the third is born and so on, whatever the intervals between the births. Each child is said to push (*ku-tuin*) the previous one out of this world. Under these circumstances the disease is ascribed to something wrong with the mother or father and they are examined by a medicine-woman or medicine-man, and any sacrumbos or an external pile found will be cut away.

If a snake inflicts two bites, the man will prove fatal. If a crocodile emits a growling sound when sinking its victim, though he escapes he will certainly die.

Treatment of diseases. Of surgical treatment there is very little to be noted. Nothing in the way of operation is performed with the exception of circumcision (see *Legends*).

As abscess is allowed to burst, the smallest tumor is left untouched, but necessary digits which are not sore, attached only by a fine pedicle, are snipped off.

The natives cannot extract teeth. They are incapable of rendering any assistance in cases of difficult labor. Dislocations are not recognized as such, but fractures are treated by the application of wooden sticks placed at intervals round the circumference of the limb parallel to it and held in position by twisted pieces of bark string (Pl. XXII, fig. 3). The principle of the tourniquet appears to be unknown.

The only instruments used consist of a small knife for incision, a cupping-horn, and a primitive form of funnel for administering enemata (Pl. XXII, figs. 1, 2, 4). The knife has a triangular blade with a stem which is commonly twisted at one of the corners. The knife is used for wet-cupping, tattooing, and circumcision (Pl. XXII, fig. 2). The cupping-horn is a small horn of a cattle. The open is pierced and after application to the part, suction is made with the mouth and then the hole sealed by rubbing a piece of beeswax over it with the tongue. Six small incisions are made in the skin for the withdrawal of the blood. The cupping-horn is called *shoni* (*ishonibo*, Chin.). Cupping is used for headache and for pain in the chest and back. The enema funnel, *shipelpe* (*ishubiri*, Chin.) is made from the neck of a gourd to which is attached a hollow stem for introduction into the anus. Half a pint of an infusion of cowpeas is injected for constipation associated with pain.

In Stamms D-5 (ca. 1912) 1952 FT7 Tao FT7

539

40. *Gwere kwle ratchuta!*
Lying on the rock, lout!

This is a strong expression which in full would read, "It is nice and warm lying on a rock in the sun, but it is not so comfortable as being in bed in company with your wife; you can go on waiting but you won't get anything." This might even be said to a dog, watching on a dog will, every morsel of food lifted to its master's mouth.

41. *Kwapdile nwi ga ashiwi!*
To have hopes of water for maggots!

It is a custom before lying down to sleep on the floor mat, to take it up and pour boiling water on the earth floor to kill any blood-sucking maggots (Congo floor-maggot, *Ambomyiopsis*). If you see a pot cooking on the fire, you naturally think there is food being prepared but you may be disappointed; it may only be the pot for heating the water to kill the maggots. The saying is thus used to a man who has made an assignation and is disappointed but goes on waiting. [513] [761]

42. *Kahowa ugwi!*
To bite underneath-like!

The cockroach is described by natives as going up to what it will eat, remaining quiet for some moments, and then suddenly taking a bite. This is said of a man who comes up to you smiling and then hits you a hard blow. [825]

Among the Tao as among other tribes that I have previously mentioned,[1] signs of salutation to a superior are made by clapping the hands or putting the breast or buttock with one hand, at the same time crouching down. A woman will go off the path and kneel, looking away from a superior passing along the roadway. 576

A person going by the door of a hut where others are sitting, will say "*Kwainga hawa!* At the door here." Passing behind anyone, he will say "*Ka-ugu'wa!* At the back!" Meeting anyone on a path, a man will simply say, "*John, here,*" adding perhaps, "*Ka-shale!* all is well!" A *shief* or headman on returning to his village after a journey, is greeted by the women with trilling of the tongue (*Ka-lulula*). [301]

Man and wife do not greet each other in the morning. The wife rises first and draws water and places it in the hut for the husband's use but nothing may be said.

When a visitor is entertained and a chicken cooked for a repast, the "pope's nose" is always for the visitor. The right hand only is used in dipping into the common pot. A man of small importance, though replete, will go on making pretence of eating at a common meal by taking very small morsels so that his superior shall finish first, and then and go away before him.

I may here add the words used by the Tao for the sounds made by various animals; they are interesting to compare with those of other languages: [82]

[1] "Notes on some tribes of British Central Africa," op. cit., p. 200-202.

3:Stanner D-5 (ca. 1912) 1922 F27 Yao F27

● 192

The dog.....*ma mwi* (as in bull).
The cat.....*ngwa!*
The cock.....*kokolikoo!*
The lion.....*ko ko ko!*
The duck.....*kwa kwa kwa!*
The cow.....*mwa!*
The sheep.....*kwi!* (as in kettle).
The goat.....*mbi!*
The dove.....*ma ma!*
The lion.....*ng'wanyi'ni!*

195 578 Among the Yao, abuse and obscene language are rare; expressions which appear in other languages all the world over are only used on great provocation and commonly with dire results. This, too, is opposed to the ways of neighboring tribes, the *Anyanja* and *Angoni*, who freely make use of such expressions as "*Ngini* pa *mulsi!*" and "*Ntanga* na *mulsi!*" "The pudenda of your mother! Clitoris of your mother!"

The following exclamations of abuse and expressions of obscenity will be seen to follow very closely upon those in other countries.

1. *Mwinishanu!* (to a girl or woman), *mbulule!* (to a boy or man) means you are a person who has not been to your *Unyago*, and therefore "you are without manners!"

2. *Mwana mkungwi!* an expression to a child meaning "you little wretch," "you nasty little thing!"

3. *Akhala kwi kpusi!* he eats with the back of his hand, he is uncircumcised, i.e. "he is a dirty person!"

4. A man with big ears is hailed "look at your ears like a lemur!" (*Likondo*, a lemur).

A Yao woman seldom or never swears at or uses bad language to a man nor the converse; the woman, however, is not behindhand in the art of bitter complaining and nagging.

[201] Pulling down the lower eyelid with the finger accompanying some exclamation has exactly the same significance as in European countries, "I am not as green as I look!"

Ku-ovapa is to make a sound like "pish" with the mouth, and is a great insult, for which a man will fight.

Screwing of the lips to one side as in the action to get rid of the sour skin of a fruit, *ku-mwa ng'wapa* is an expression of contemptuous disgust.

695 539 The similarity to European ways is again seen in swearing or taking oath. A Yao swears by the spirits of his ancestors or by a chief:

"*Chiri! cha Malungu!*"
"(By) the graves of Malungu!"

or he may indirectly name some ancestor:

"*Nyakwikila kpungu!*" or "*Nyakwikila kwinkwi!*"
"I swear by the spear!" "I swear by the lion!"

4:Stanford D-5 (ca. 1909) 1910 FT7 Tan FT7
Marsai FE4

wrestle thus: each man passes his right arm round his opponent's waist and grips his opponent's left wrist. When one has thrown the other, the victor spits on his hand, dips it in the dust and then smears his victim on the forehead.

The boys practise long jumping. Small boys make miniature bows and arrows, spears, etc., to play with; in their ways and toilet small children resemble European children exactly. Little girls play at dolls—they cut cucumbers into shape and dress them in calico cloth, carrying them on their backs and making pretence to suckle them.

The first words spoken by an infant are *ma* (*ma*-mother) and *ta* (*ata*-father); at two years names and tata are words used; a word soon learnt is *ndawa* "No! I don't want to."

The only setting I ever heard of occurred when my own Machila man was seized a village woman, in which a woman (a man dressed up) while pounding corn was seized and raped by another man. At the right moment her husband and others rushed in and collared the man, who was condemned to have his head cut off; the execution followed.

Dances.

The following is a list of dances; opposite each is the name of the tribe who dance it:—

1. *Chindindo*, Tan.
2. *Ndemsie*, Tan.
3. *Ulude*, Tan.
4. *Mdiwari*, Matenje.
5. *Kwaje*, Matenje.
6. *Tindandwe*, Matenje.
7. *Mwawe*, Matenje.
8. *Kwampwe*, Matenje.
9. *Mlende*, Matenje.
10. *Chilwi*.
11. *Ungwe*, Matenje.
12. *Ntule*, Matenje.
13. *Ndwe*, Tan.
14. *Njende*, Tan.
15. *Sukwa*, Tan.
16. *Mwaje*, Tan.
17. *Mlende*, Tan.
18. *Chilende*, Tan.
19. *Mlawa*, Tan.
20. *Mwapwi*.
21. *Sapi*.
22. *Chiwawiwiwi*.
23. *Mawa*, Matenje and Tan.
24. *Mwajwindo*, Tan.

1. *Chindindo.*—Danced at the *mdwie* (mourning ceremony) generally inside the house unless a very large number of people are present.

All sit round and clap while one after the other men and women get up and dance in a rocking motion from one foot to the other, a small drum held against the chest; in former times a large one lying on the ground used also to be used—now two or three, standing on legs, are employed. When danced in the dead man's house, the body lies at one end of the room with the *Ndembele* sitting by it. On one side are the walkers, and on the other the dancers, the dance being sometimes started immediately after death, sometimes the following morning and continued for three days.

This dance is also performed at almost any beer drinking.

ahuba, a woman who is pregnant for the first time; *kawaba*, a woman who has one or two children; *ajiwaba*, a woman who has three or four children, and lastly, *ahuba*, a woman who is past child-bearing age.

The information which I have been able to collect on abortifacients and contraceptives suggests that they are not used by married people merely to prevent their having more children, but that they are used by people who wish to avoid pregnancies which would be embarrassing, for example, by a woman whose husband is a labour migrant. To what extent the abortifacients and contraceptives are effective I cannot say; some, I know for certain, rely on a magical principle, for example, the medicated cord worn by a man during intercourse. On the other hand, the abortifacients taken orally may have some active ingredient.

A barren woman or an impotent man is regarded with some embarrassment and the marriage worries (*ainamgwanwe*) of a childless couple will go to considerable trouble and expense consulting diviners and healers in an attempt to make their wards productive. Childless couples are regarded as not fully adult and are treated in a patronizing way by those who have borne children. Since a man may marry other wives, barrenness in a woman is a cause of sorrow to her husband, but is not in itself a ground for divorce. Where the man is impotent, however, the woman may divorce him on this ground, though she usually takes a paramour and forces her husband to an action for damages which automatically leads to a divorce because it is the usual practice in these cases for the court to ask the woman if she wants to be divorced from her husband.

In contrast to the satisfaction shown at the birth of a child is the sense of sorrow evinced when a child is still-born or the woman miscarries. The Yao do not distinguish between still-births and abortions, both events being known by the word *kwanga*. This is a verb and refers to the process of abortion; there is no term for the dead foetus itself. I made no attempt to enumerate miscarriages and still-births because they are supposed to be due to breaches of sexual taboos on the part of the husband and wife, and interviewees were naturally reluctant to mention them. Miscarriages and still-births are greatly feared, and the woman is considered to be in a very dangerous condition until she and her husband have carried out a ritual purification. Should a man have intercourse with a woman who has miscarried and not yet been purified he will contract a disease called *kwaw* which is believed to be invariably fatal. Still-born children or aborted foetuses are buried in a hole dug with sharpened sticks in the bush by the women, whereas children who are born alive and die afterwards are buried in the graveyard in graves dug by men with hoes. The burial spots of still-born babies or aborted foetuses are marked with a stone or broken pottery, since it is believed that to step on them will induce an illness.

The concern of the immediate kin-groups is shown in the child-birth procedure. Birth normally takes place in a hut in the presence of the older female relatives of the woman and the female representatives of the man. The husband's representatives are necessary because the Yao, like many other Central African peoples, believe that an adulterous child will not be born to the woman unless she confesses (*kupasa*) the name of the genitor. If she persists in concealing the identity of the genitor, they

* *ahuba* = elephant, heavy, lazy. The terms *ahuba* and *ahuba* have both refer to the ivory beads traditionally worn by the women in the puberty initiation ceremony.

T: Hatharwick M-5 (ca. 1900) 1962 FT7 Tao FT7

with the dead. He approaches the shrine, opens the gate of the fence, takes a 769
pathful of beer and pours it into the pot at the head of the grave. Next he places the basket of porridge and the plate of meat on the mound beside it and retires. Kneeling down outside the gate facing the shrine and a few yards in front of the people he chants his prayer in a monotone, each petition commencing with "Chonde, chonde," "Please, please." All the while the people clap their hands in unison with him and sing the responses as they do in a native case in the chief's court.

When the offering has been made at the grave, the rest of the beer or other food is consumed by the worshippers. Grass are fired as a token of respect to the [535]
dead, and the rest of the day is spent in dancing.

Such shrines are to be seen in almost every Tao village where the inhabitants have been located for any length of time. They are regarded with awe—the little 778
boys as they pass whisper to each other in a warning tone, "mzimba." Should the 769
village be moved to any other district, the old shrine is not forgotten. Periodical visits are made to it with the usual offerings. In cases where the old home has been occupied by a people hostile to the old inhabitants, such visits are usually made during the night, and the people awake in the morning to find that the old chief's grave in their midst has been newly repaired, and a fresh offering of food placed at its head.

Sometimes such shrines are found on the summits of hills which once may have been a refuge from the enemy in times of war, but which now lie bare and deserted. Thither in their need the people make their way with their offering of food and beer, and their prayer for rain or suitable weather for the crops. Near Mwenyo such shrines are to be seen on the tops of Mount Sochi and Mount Mchiru. The former is the abode of the spirit of Kankhondo, and the latter of Mpohola, both old Mawri or Mang'anja chiefs who doubtless fled there seeking safety from the war of the invading Tao, and died leaving their records to be the mulungu or spirit of the mountain. Some years ago, during the fear of an Angoni invasion, the Tao of Mount Sochi fled to the hill-top for refuge, and there the old chief Kapani died. He was buried close to the grave of the old Kankhondo, and now, when the Tao on Sochi make an offering, it is to the spirit of Kapani that the homage is paid, and the shrine of Kankhondo lies neglected.

Only the graves of chiefs or headmen are thus treated as shrines of worship. 559
The burying place of slaves and the common people lies away in the thick bush, 769
where only the rank grass or the thicket of old trees marks the spot. No offerings 769
are ever taken there, for such as are buried there can have no influence in the 769
spirit world. The dead are buried, the broken pot or basket is left on the grave to 778
mark the spot, and none ever seek to go there save to lay another in the same neglected ground.

II. But the word mulungu is used by the Tao with a wider application. 776
Etymologically the word is connected with the root *kulungwa*, which in so many 197
of the other branches of the Bantu tongue appears as *kulu* or *kuru*, and signifies 193
"great" or "old." It is the same root which appears in the Kafir word for God,

7: Hetherwick M-5 (ca. 1900) 1902 FT7 Yao FT7

776, 777, 792 Unkulunkulu, which may therefore be rendered as "The old, old One," or "The great, great One." A like rendering may be given of the Yao form *mulungu*, the "Old One," or the "Great One." In this or a modified form *mungu* (*Swahili*) it appears in all the Eastern group of the Bantu tongues as the equivalent for "God" (see Father Torrend's *Comparative Grammar of South African Bantu Languages*). To trace it as Father Torrend does to any connection with Moloch, the god of the Phœnicians, is to attach undue weight to a chance coincidence of sounds.

[114]

796, 795, 776 As we have already seen, the word *mulungu* is applied to the human finds when regarded as an object of worship, or as an inhabitant of the spirit world. But it is also used to denote that spirit world in general, or more properly speaking, the *aggregate of the spirits of all the dead*. The plural form of the word is rarely heard, unless when the allusion is made to the souls in their individualities. In its native use and form the word does not imply personality, for it does not belong to the personal class of nouns. Etymologically it is classed with the leg, heart, arm, hand, etc., of the human frame. Its form denotes rather a state or property inhering in something, as the life or health inherent in the body. Among the various tribes where the word is in use as we have described, the missionaries have adopted it as the term for "God." But the untaught Yao refuses to assign to it any idea of being or personality. It is to him more a quality or family of the human nature whose signification he has extended so as to embrace the whole spirit world. Once after I had endeavoured to impress an old Yao headman with the personality of the Godhead in the Christian sense of the term, using the term *Mulungu*, my listener began to talk of "Che Mulungu," "Mr. God," showing that originally to him the word conveyed no idea of the personality I was ascribing to it.

776, 773 And yet the Yao approaches closely to the idea of personality and a personal being, when he speaks of what *mulungu* has done and is doing. It is *mulungu* who made the world, and man, and animals. For in the interior of the continent, toward the north-west, beyond the plains and swamps of the Lungwa River and Lake Bangweulu, there lies, in Yao legend, an island in the midst of a lake called Kapitimpa. On that island there is to be seen a large flat rock marked by the footprints of men and animals of all kinds. When that rock was once a heap of moist clay, *mulungu* created all living things and sent them across the salt water, where their footprints remained to be afterwards hardened into the impressible rock. Such is the Yao legend of the creation of the world, and *mulungu* is always *the Great Creator*.

776 *Mulungu* is also regarded as the agent in anything mysterious. "It's *mulungu*," is the Yao exclamation on being shown anything that is beyond the range of his understanding. The rainbow is always "*mulungu*," although some Yaos have begun to use the Mang'anja term "*utu wa Lesa*," bow of Lesa.

[117]

Offerings are made to the spirit world or to *mulungu* as the great agency in the affairs of human life. Outside the village, or beside the headman's hut, may often be seen a rough shed. In this are placed the first-fruits of the new crop,

769, 782

8:Mitchell E-5 (1946-1947) 1949 FT7 Yao FT7

[P. 142C]

[illegible]

[illegible]

[illegible

192

The dog.....*nee nee!* (as in *bed*).
The cat.....*ngwa!*
The cock.....*kokokiko!*
The lion.....*ho ho ho!*
The duck.....*hee hee hee!*
The cow.....*mee!*
The sheep.....*bee!* (as in *bette*).
The goat.....*mbi!*
The dove.....*coo coo!*
The lion.....*ng'ooong'o!*

195 578 Among the Yao, abuse and obscene language are rare; expressions which appear in other languages all the world over are only used on great provocation and commonly with dire results. This, too, is opposed to the ways of neighboring tribes, the Anyanja and Angoni, who freely make use of such expressions as "*Ngini pa mulai!*" and "*Ndanga wa mulai!*" "The pudenda of your mother! Clitoris of your mother!"

The following exclamations of abuse and expressions of obscenity will be seen to follow very closely upon those in other countries.

1. *Mwinikanu!* (to a girl or woman), *mkulu!* (to a boy or man) means you are a person who has not been to your *Unyago*, and therefore "you are without manners!"

2. *Mwana mkungwi!* an expression to a child meaning "you little wretch," "you nasty little thing!"

3. *Akulila kwi Kpusi!* he eats with the back of his hand, he is unmannered, i.e. "he is a dirty person!"

4. A man with big ears is hailed "look at your ears like a lemur!" (*Likondo*, a lemur).

A Yao woman seldom or never swears at or uses bad language to a man nor the converse; the woman, however, is not behindhand in the art of bitter complaining and nagging.

[108] Pulling down the lower eyelid with the finger accompanying some exclamation has exactly the same significance as in European countries, "I am not so green as I look!"

Ku-ompa is to make a sound like "pish" with the mouth, and is a great insult, for which a man will fight.

Screwing of the lips to one side as in the action to get rid of the sour skin of a fruit, *ku-mwa 'g'ompa* is an expression of contemptuous disgust.

695 531 The similarity to European ways is again seen in swearing or taking oath. A Yao swears by the spirits of his ancestors or by a chief:

"*Christi cha Mukungwi!*"
"(By) the grave of *Mukungwi!*"

or he may indirectly name some ancestor:

"*Kpakombile kpungwi!*" or "*Kpakombile kimdai!*"
"I swear by the spear!" "I swear by the lion!"

7: Hetherwick M-5 (ca. 1900) 1902 FT7 Yao FT7

Unkulunkulu, which may therefore be rendered as "The old, old One," or "The great, great One." A like rendering may be given of the Yao form *mulungu*, the "Old One," or the "Great One." In this or a modified form *mungu* (Swahili) it appears in all the Eastern group of the Bantu tongues as the equivalent for "God" (see Father Torrend's *Comparative Grammar of South African Bantu Languages*). To trace it as Father Torrend does to any connection with Moloch, the god of the Phœnicians, is to attach undue weight to a chance coincidence of sounds.

As we have already seen, the word *mulungu* is applied to the human *kinda* when regarded as an object of worship, or as an inhabitant of the spirit world. But it is also used to denote that spirit world in general, or more properly speaking, the *aggregate of the spirits of all the dead*. The plural form of the word is rarely heard, unless when the allusion is made to the souls in their individualities. In its native use and form the word does not imply personality, for it does not belong to the personal class of nouns. Etymologically it is classed with the leg, heart, arm, head, etc., of the human frame. Its form denotes rather a state or property inhering in something, as the life or health inhores in the body. Among the various tribes where the word is in use as we have described, the missionaries have adopted it as the term for "God." But the untaught Yao refuses to assign to it any idea of being or personality. It is to him more a quality or faculty of the human nature whose signification he has extended so as to embrace the whole spirit world. Once after I had endeavoured to impress an old Yao headman with the personality of the Godhead in the Christian sense of the term, using the term *Mulungu*, my listener began to talk of "Che Mulungu," "Mr. God," showing that originally to him the word conveyed no idea of the personality I was anything to it.

And yet the Yao approaches closely to the idea of personality and a personal being, when he speaks of what *mulungu* has done and is doing. It is *mulungu* who made the world, and men, and animals. Far in the interior of the continent, toward the north-west, beyond the plains and swamps of the Lungwa River and Lake Bangweulu, there lies, in Yao legend, an island in the midst of a lake called Kapitilungu. On that island there is to be seen a large flat rock marked by the footprints of men and animals of all kinds. When that rock was once a heap of moist clay, *mulungu* created all living things and sent them across the soft mass, where their footprints remained to be afterwards hardened into the impressible rock. Such is the Yao legend of the creation of the world, and *mulungu* is always the Great Creator.

Mulungu is also regarded as the agent in anything mysterious. "It's *mulungu*," is the Yao exclamation on being shown anything that is beyond the range of his understanding. The rainbow is always "*mulungu*," although some Yaos have begun to use the Mang'anja term "uta wa Lesa," bow of Lesa.

Offerings are made to the spirit world or to *mulungu* as the great agency in the affairs of human life. Outside the village, or beside the headman's hut, may often be seen a rough shed. In this are placed the first-fruits of the new crop,

1: Tew E-4 (no date) 1950 FT7 Yao FT7

162. relatively close settlement should be contrasted with conditions 60 years ago, when villages consisted of from 10 to 20 huts, with an average population of 100.[1] The size of villages now ranges from a few huts to 60 or more, with a total average population of about 40 per village, ranging from 15 to 200.

From a sample taken from three groups of hamlets in Liwonde district, it appears that the average gross reproduction rate over the last ten years has been about 2·9, while the net reproduction rate was about 2·2.[2]

Statistics are not available for the Yao population of Portuguese Nyasaland. Livingstone noted that at Mtarika's on the upper Ruvuma (not the town now on the Lujenda but an older one) there was an immense population. Mataka's town had about 1,000 houses, and there were many villages around.[3] The Yao fastnesses at Unangu and Mtonya were also thickly populated.[4] In the barren country south of the Ruvuma, between its confluence with the Lujenda and the beginning of the Makondi plateau, the country was almost uninhabited.[5]

In Tanganyika the Yao are distributed as follows:[6]

District	*Total population*	*Total children*
Tunduru	32,761	13,215
Masasi	13,009	5,048
Kilwa	6,560	1,616
Lindi	6,415	1,574
Mikindani	1,014	283
Songea	7,550	2,879
Dar es Salaam	1,869	270
Rufiji	1,013	189
Tabora	1,909	520
Other districts	2,377	800
	78,499	26,874

Percentage children to adults	*Percentage males to females*		*Increase since*	
	Adult	*Children*	*1928*	*1921*
50	91	113	29,855	34,699

LINGUISTIC DATA

147. The Yao language is spoken over an area extending from near the east coast of Africa to the east shore of Lake Nyasa, and from the sources of the Ruvuma in the north to the Lujenda in the south.[7] There are also two small pockets of Yao who crossed the lake to the west side, who speak their own language.

Duke classifies it as one of the group of Bantu languages in the East Central Zone, which constitutes a bridge between the languages of the East and Central Zones. His

[1] Macdonald, 1882, p. 144.
[2] 1874, pp. 68, 72.
[3] Thompson, 1882.
[4] *Census of Native Population*, 1931, Table VI. There are also 4,832 people at Kilwa called Machinga, whose name indicates that they are probably of Yao origin.
[5] Herlitzvich, J. 1902, p. 216.
[6] Mitchell, 2.
[7] Maples, 2, J. 1895.

1: Tew E-4 (no date) 1950 FT7 Yao FT7

places it in the same group of languages as Makua, Nkonde, and Tumbuka, but not with Makonde. He counts Nginda as a dialect of Yao.[1] Guthrie places it in the Makonde group, but not in the Makua-Lomwe group.[2] 197

The Yao language shows very little dialectical variation, which is attributed to the age-long Yao love of travel. Such differences as occur are found chiefly in accent or idiom, not in grammatical structure. There are five different divisions corresponding to the different branches of the tribe: (*a*) *Amahale*, near the sources of the Ruvuma; (*b*) *Mwende*, near Mataka's, south of the Ruvuma; (*c*) *Masenjaga*, near the south end of Lake Nyasa; (*d*) *Mangoche*, near Blantyre; (*e*) *Machinga*, on Mounts Chikala and Zomba.[3]

PHYSICAL ENVIRONMENT

The Yao boundary on the west, where they mix with Nyanja peoples of the east lake shore, is a line of hills about 1,500 ft. above the lake level, extending south to Mangoche. Starting north-east from the fertile valley of the Mandimba, there is a fairly level plain, watered by other tributaries of the Lujenda, as far as Mataka's and Mtarika. On the east side of the Luchilingo river there is a fairly continuous line of mountain fastnesses and hills, and from the source of the Mainje to its confluence with the Ruvuma, there are lines of fortresses to the east and west, traversed by steep mountain tracks. From the Mainje source to the Ruvuma the country is cut by deep streams and crowned by mountains 2,000 to 3,000 ft. high.[4] On the south bank of the Ruvuma, below the confluence with the Lujenda, the country is a semi-desert, with barren stony soil, little water, and plentiful game. The Yao also inhabit the western edge of the Makondi plateau, where the valley of the Ruvuma widens into a great plain. Here the sandstone of the Makondi plateau is denuded and the soil is barren and stony. The Makondi bush gives way to thin open forest of mimosa and other trees.[5] Most of the Yao country in the east of Portuguese East Africa is tsetse infested, but in the interior, approaching the east shore of Lake Nyasa, it is capable of supporting fine herds.[6] 133 [131]

South Nyasa district is mountainous in the east; the plain in the west stretches into Dedza and Ncheu districts. Owing to scarcity of water in the dry season this plain is thinly populated. The soil of the plain is sandy, except on the shore of the lake and the river bank, where it is rich alluvial soil; in the hilly parts the soil is clayish. During the last few years the lake level has risen and on the lake shore and the banks of the Shire river water is plentiful throughout the year. Smaller rivers have enough water all the year round to supply villages. The average annual rainfall at Fort Johnston is 33 in. for the last six rainy seasons, but the general average is 28 in. The average mean temperature is 73° F. The climate in the plains and at Fort Johnston is hot and trying in the hot season, but cooler on the hills. The greater part of upper Shire district is below 2,000 ft. in altitude and hot and unhealthy. In the dry weather most rivers are 132

[1] 1925, p. 65.
[2] 1948, p. 62. Naturally most of the earlier informants support Doke's classification, since they are mainly the sources on which it was based (Hetherwick, op. cit., Meinhof, Sundermann, 1905, p. viii). Affinity with the language of the Gulf of Guinea has been claimed for Yao by Dr. Albert Drexel, of Innsbruck, quoted by Hoskel, 1922, p. 9.
[3] Hetherwick, 3, 1900, pp. xiii-xv; 1, 1899, p. 80.
[4] Thompson, 1880, pp. 67-78.
[5] Johnson, 3, 1897.
[6] Hamilton, 1905, p. 12.

1: Tew E-4 (no date) 1950 FT7 Yao FT7

Administration, but many cannot afford to do this. The people regard the taxes they pay to the Administration as a substitute for the chief's tribute. As the Native Authority the chief appears to be responsible for tax-collection, as the tax-clerk lives at the court.

The chief is responsible to the Administration, among other things, for latrine construction and for punishing the infringement of various regulations. His main duties are judicial, as judge of the Native Authority Court. The bureaucracy attached to the Native Authority includes a number of functionaries, e.g. Kawinga's, in 1947 one of the larger courts, had 1 court clerk, 1 assistant court clerk, 1 community worker, 1 forest guard, 1 agricultural demonstrator, 1 sanitary inspector, 9 court messengers, 2 caretakers, 4 gazette men, 1 market clerk, 1 market sweeper, 6 court assessors. These are paid by the Native Treasury. Court assessors help in the arbitration of cases. The key position at court is held by the court clerk, and usually he is not a Yao, but an Ngoni, who, because he is literate, is the medium of all written communications to and from the chief. The court sergeant is the correct channel of approach to the chief, and the court messengers represent the chief to the villages.

The territory of a Native Authority is divided into 'administrative villages', under officially recognized and paid headmen. Within these areas there are clusters of huts, which do not form officially recognized administrative units, but which are none the less villages under their own hereditary headmen. The administrative village headman is responsible for the payment of taxes in his area, and for the observance of various regulations. He is usually a man with some standing in the Yao social system: one who has the right to conduct a boys' initiation ceremony, or to wear the head-band signifying rank. His authority is derived partly from his status as a senior kinsman, partly from his status as a village headman. If the administrative village under him includes a number of hamlets unrelated to the administrative village headman, he will delegate his responsibilities in these hamlets to their own headmen. Consequently, since village headmen perform administrative duties, whether they are officially recognized or not, there is competition among them for the official posts. In order to bring pressure to bear on the chief to make him concede marks of rank, they may threaten to move out of his area, and so to deplete his following. In spite of this bargaining tool, the position of the village headman *vis-à-vis* the chief is said to be getting progressively weaker. Cases once tried by them are now being taken to the chief's court, and the latter is able to draw on the power of the Administration to establish his dominance over the headmen.

The chief in the modern sense stands as the representative of the people to the white Administration, and as the representative of the white Administration to the people. One reason for the lack of direct contact between the Administration and the people is the fact that Yao is not the official language of the district, and therefore Yao interpreters are necessary.

There are some occasions when the chief and his officials perform the functions proper to their office under the old social system. The white Administration is not concerned with their ritual functions, nor with initiation rites, nor does it take cognizance of witchcraft offences. Accusations of witchcraft are judged by the same personnel as accusations of theft or adultery, but they are not dealt with in the court house, nor recorded in the book.

1:Stanner D-5 (ca. 1912) 1922 ???? Yao ????

That these several sections of the Wayao differ in many respects may be seen by comparing the Amangoche of *Africana*[1] with the Amachinga of this article. I am not sufficiently conversant with the Amangoche to make a definite statement on this point but I am inclined to believe that after longer residence and wider knowledge, Macdonald would have found that some of his statements needed revision. Those whom he considered the "Yao proper" but whom I prefer to speak of as the Amangoche seem to have a considerable mixture of Anyanja, since their language contains many Chinyanja words and many of their customs are practically those of the Anyanja. I am of the opinion that the Amachinga may be regarded as more typical of the Wayao, and except where ambiguity might arise, I shall speak of them as the Yao.

The original home of this Bantu speaking people is uncertain; in historic times all the sections of the Wayao were originally grouped in that part of Portuguese East Africa around the hill called Chao, whence they probably derived their name, Wa Chao or Wa Yao. About the middle of the nineteenth century, as the result of inroads by neighboring tribes of Abale from the southeast, and raids by the Makwangala, a branch of the Angoni of Zulu origin, from the northwest, disruption of the Yao people occurred, and the divisions mentioned above, moved toward Nyassland. The Mazunga branch settled for the most part along the eastern shore of Lake Nyasa but a sub-section known as Tambala Yao reached the west side of the lake. The Machinga made a settlement near Lake Chiuta under a number of old chiefs, including Malowe, (Nakutumbe), Kawinga, Chembula, Kalambula, and Mazio.

The descents of the Makwangwala again caused the Wayao to move on from Chiuta to Ruvinga on the Mbaka stream. Here Malowe suffered another defeat at the hands of the Angoni; many of his people were driven off and taken to the neighboring Angoni country where they were held in captivity for some time. Finally they were rescued by the enterprise of one of Malowe's old men, Kalungula, who went alone to the Angoni, saying that he wished to live with them and with his own brethren. One day, he asked the Angoni if they would like to see their captives dance, and when they assented, he called the Yao together, and clapping his hands to keep time, he began to sing one of their dance songs. Gradually he gathered all the Yao into the village open space, dancing and singing; then, keeping to the same air, he told them why he had come, using their own language which the Angoni did not understand. "Malowe, our chief, remains at the Mbaka stream. It is not far off. We must all join him again. Now dance for joy. If anyone does not return there, it is his own fault." Then, a few at a time, the dancers left the crowd and stole away into the bush and, as night came on, they all made off and reached Malowe's camp in safety.

Malowe's people were again attacked by the Angoni, and on this occasion they defeated their enemies. The Angoni retreated and skirting Zomba mountain, reached the Shire

7: Hetherwick M-5 (ca. 1900) 1902 FT7 Tao FT7

with the dead. He approaches the shrine, opens the gate of the fence, takes a pot769
pot of beer and pours it into the pot at the head of the grave. Next he places
the basket of porridge and the plate of meat on the mound beside it and retires.
Kneeling down outside the gate facing the shrine and a few yards in front of the
people he chants his prayer in a monotone, each petition commencing with "Chonde,
chonde," "Please, please." All the while the people clap their hands in unison
with him and sing the response as they do in a native case in the chief's court.

When the offering has been made at the grave, the rest of the beer or other
food is consumed by the worshippers. Goats are food as a token of respect to the [635]
dead, and the rest of the day is spent in dancing.

Such shrines are to be seen in almost every Yao village where the inhabitants 778
have been located for any length of time. They are regarded with awe—the little 769
boys as they pass whisper to each other in a warning tone, "nanoko." Should the
village be moved to any other district, the old shrine is not forgotten. Periodical
visits are made to it with the usual offerings. In cases where the old home has
been occupied by a people hostile to the old inhabitants, such visits are usually
made during the night, and the people awake in the morning to find that the old
chief's grave in their midst has been newly repaired, and a fresh offering of food
placed at its head.

Sometimes such shrines are found on the summits of hills which once may
have been a refuge from the enemy in time of war, but which now lie bare and
deserted. Thither in their need the people make their way with their offering of
food and beer, and their prayer for rain or suitable weather for the crops. Near
Blantyre such shrines are to be seen on the tops of Mount Sochi and Mount
Michiru. The former is the abode of the spirit of Kankhomba, and the latter of
Mpelele, both old Maravi or Mang'anja chiefs who doubtless fled there seeking
safety from the war of the invading Yao, and died leaving their wonder to be the
nanyanga or spirit of the mountain. Some years ago, during the fear of an Angoni
invasion, the Yao of Mount Sochi fled to the hill-top for refuge, and there the
old chief Kapeni died. He was buried close to the grave of the old Kankhomba,
and now, when the Yao on Sochi make an offering, it is to the spirit of Kapeni
that the homage is paid, and the shrine of Kankhomba has neglected.

Only the graves of chiefs or headmen are thus treated as shrines of worship. 554
The burying place of slaves and the common people lies away in the thick bush, 769
where only the rank grass or the thicket of old trees marks the spot. No offerings 769
are ever taken there, for such as are buried there can have no influence in the 769
spirit world. The dead are buried, the broken pot or basket is left on the grave to 778
mark the spot, and none ever seek to go there more to lay another in the same
neglected ground.

II. But the word nanyanga is used by the Yao with a wider application. 776
Etymologically the word is connected with the root *kalanyana*, which in so many 197
of the other branches of the Bantu tongue appears as *kala* or *kara*, and signifies
"great" or "old." It is the same root which appears in the Kafir word for God, 192

7: Hetherwick M-5 (ca. 1900) 1902 FT7 Tao FT7

Uukulunkulu, which may therefore be rendered as "The old, old One," or "The great, great One." A like rendering may be given of the Yao form *mulungu*, the "Old One," or the "Great One." In this or a modified form *mungu* (Swahili) it appears in all the Eastern group of the Bantu tongues as the equivalent for "God" (see Father Torrend's *Comparative Grammar of South African Bantu Languages*). To trace it as Father Torrend does to any connection with Moloch, the god of the Phœnicians, is to attach undue weight to a chance coincidence of sounds.

As we have already seen, the word *mulungu* is applied to the human finds when regarded as an object of worship, or as an inhabitant of the spirit world. But it is also used to denote that spirit world in general, or more properly speaking, the *aggregate of the spirits of all the dead*. The plural form of the word is rarely heard, unless when the allusion is made to the souls in their individualities. In its native use and form the word does not imply personality, for it does not belong to the personal class of nouns. Etymologically it is classed with the leg, heart, arm, head, etc., of the human frame. Its form denotes rather a state or property inhering in something, as the life or health inherent in the body. Among the various tribes where the word is in use as we have described, the missionaries have adopted it as the term for "God." But the untaught Yao refuses to assign to it any idea of being or personality. It is to him more a quality or faculty of the human nature whose signification he has extended so as to embrace the whole spirit world. Once after I had endeavoured to impress an old Yao headman with the personality of the Godhead in the Christian sense of the term, using the term *Mulungu*, my listener began to talk of "Che Mulungu," "Mr. God," showing that originally to him the word conveyed no idea of the personality I was ascribing to it.

And yet the Yao approaches closely to the idea of personality and a personal being, when he speaks of what *mulungu* has done and is doing. It is *mulungu* who made the world, and men, and animals. Far in the interior of the continent, toward the north-west, beyond the plains and swamps of the Lungwa River and Lake Bangweulu, there lies, in Yao legend, an island in the midst of a lake called Kapitilungu. On that island there is to be seen a large flat rock marked by the footprints of men and animals of all kinds. Where that rock was once a lump of moist clay, *mulungu* created all living things and sent them across the soft mass, where their footprints remained to be afterwards hardened into the impressible rock. Such is the Yao legend of the creation of the world, and *mulungu* is always the Great Creator.

Mulungu is also regarded as the agent in anything mysterious. "It's *mulungu*," is the Yao exclamation on being shown anything that is beyond the range of his understanding. The rainbow is always "*mulungu*," although some Yaos have begun to use the Mang'anja term "uta wa Lesa," bow of Love.

Offerings are made to the spirit world or to *mulungu* as the great agency in the affairs of human life. Outside the village, or beside the headman's hut, may often be seen a rough shed. In this are placed the foot-drum of the new corp,

O.Lawson T-5 (ca. 1940)1943 FT7 Tao FT7
MARAVI, F.R.Y

[P. 180C]

and Tao tribes, who there, predominate. These peoples seem to have come from different parts of the continent. Their languages, despite a common Bantu descent and much recent borrowing, remain as distinct as possible and are obviously not modern dialects of one more primitive tongue; their original social structures must, however, have been similar enough to attract them to each other, for they have so intermarried and their customs so fused, that one can now scarcely distinguish their ways of life and village organization. Indeed, while homesteads of apparently pure Nyanja and Tao still predominate, every considerable district contains members of both tribes, with some people, at least, of mixed descent; moreover, and although one perceives a difference of character and manners, and trace it to the influence of Mohammedanism on the Tao, one may well be unconsciously exaggerating. This account of relationship terms, (with brief reference to underlying social structure), must be taken, therefore, to cover the fusion of two once-separate tribes, and Nyanja and Tao equivalents must—unless otherwise stated—be understood as identical in meaning. In fact, Nyanja often prefer Tao terms to their own.

How far can one isolate the Nyanja-Tao social structure in order to study it? Ngoni immigrants in this district are few, and their original patrilineal social system has largely succumbed to the customs of these earlier comers. The matrilineal system of the still more numerous and numerous Lomwe immigrants is, I believe, (though my evidence is fragmentary), exerting a considerable influence on the somewhat dissimilar but also matrilineal Nyanja and Tao.

medicine from the gourd by means of a stick; then placed at the forehead, point forwards, held for a second at each armpit, and finally rubbed over in the hands again. The cup was similarly manipulated, especially the edge, and rubbed in the hands, as were the horns on the *ebe* spoon. All this was done with great precision and evidently in definite order, each article being laid on the ground in turn, and the string of matting rolled up. Four pieces of reed of a size that would lie over the mouth of the gourd cup overlapping the edges about an inch were then selected from among others and set ready on the ground. The cattle were treated with medicine from the same gourd. The horn was placed in the gourd by the operator, point upwards and lying towards himself, so he held the gourd by its body in the palm of his left hand, the handle towards him. Shaking the rattle in the right hand, he constantly muttered to the *chisungo* " to tell him truly," " to answer his questions," and so on. By slight movements of his left arm which were well disguised but quite easily perceptible to the watcher, he could make the horn assume the erect position in the gourd and then fall backwards or forwards or to either side. The first position indicates " all is well," "nothing need be done"; the second means "there is trouble," "some one is talking at the village," " there is a case to be settled." These answer questions put to it by the owner who is being consulted about some case of illness, etc.

Another method of divining is with the horn in position as before mentioned and the four pieces of stick set across the mouth of the gourd crossing one another, the ends projecting at the sides. The operator is able to make the horn appear to knock off all the sticks without moving the gourd, or he can make any number of the sticks tumble into the gourd, and repeat the performance. If they fall off, it means a good day to go on a journey; if they fall in, the journey should be postponed.

The *chisungo ebe* spoon is held similarly in the left hand by the middle so that two wings are formed, each with the weight of a horn at the end. The center-of-horn is able by almost imperceptible movements to make the two wings open and fall away from each other or swing together, and together partly roll up. When they fall apart wide open, it is an indication that all will be well; when they close, death may be expected. The gourd and horn and this *chisungo ebe* spoon form a pair which are called female and male.

Chiyanda ebe ndinga: *ndinga* is a word relating to omens in regard to journeys. Thom Chonga told me that he remembers as a boy, when his father was going on a journey, he would take some pieces of root, moistens them in his mouth, and stick them on the wall of the hut. These pieces of root were daily watched by Thom's mother, as unaided they gradually took up a position lower and lower on the wall until they reached the ground. Then she knew that her husband had safely reached his destination.

Omens may be told in yet another way, *chisungo ebe kwandula* (*ku-wandula*, to speak). *Ndambo* is put in an empty house and the medicine man and his clients sit outside. The medicine man is asked some question which he puts to the *ndambo* which then answers like an oracle. I have never seen this done but my native informants tell me the voice that

3:Shanna D-5 (ca. 1912) 1922 FT7 Yao FT7

787
198

speaks is invariably used in shamanism and Chinyanja is the language always used. It is doubtless a case of what we should call ventriloquism. The custom is evidently of Mang'anja origin but in great favor with the Yao.

787
695

Divination also plays an important part in tracing thieves or stolen property or in picking out from a number of people anyone guilty of some crime. Several modes of procedure may be adopted. The *chimanga* called *ukondo* may be used as the *chimanga cha chipote* (*chipote*, a kind of basket). Medicine in the form of certain *ziwisi* is placed on the ground and covered by the inverted basket on which is placed the *ukondo*. Each person in turn is requested to lift the basket and the guilty one is at once revealed by his inability to budge the basket off the ground. This method may even be used to reveal a man guilty of incest.

787

Other methods of divination include a kind of trial by ordeal somewhat similar to a boiling water ordeal. *Kuondola* (from *ku-ondola*, to tramp round, referring to the peregrinations made in search of what is lost, or *nondowola*, the Chinyanja word from *ku-londa*, to follow on the footsteps of) is the name of the witch-doctor who searches for stolen property or traces the thief. The same man may be called *wakondola* in Chinyanja (from *ku-ondola*, to reveal) when he uses his instrument to detect in a crowd the person guilty of some crime. The *kondola* uses the horn of a kudu stuffed with appropriate medicine, the actual mix *ex ante* and methods adopted varying somewhat with different practitioners. The practice I believe to be a Mang'anja one and I think most of the operators were Anyanja men and not Yao, though the Yao, as with other customs, adopted the system fully. In my district, the *kondola* was usually armed with a rattle; when the horn indicated the guilty individual, he intimated the fact to the assembled crowd by throwing flour over him.

When a search is to be made for stolen property, the horn is put into the hands of four men, alternate men pressing down and pulling up on the long horn, while the medicine man stands by, operating his rattle and exhorting the horn to do its work of revelation. I know a man who has on several occasions assisted in holding the horn; he said it simply seemed to drag him on in a series of jerky movements, sometimes going very fast, at other times moving slowly, dragging the holders "along the footsteps of the thief with the stolen goods" in and out of the house, through the bush, and across streams, until suddenly the horn dropped from their hands to the ground, where on digging, the stolen goods were found buried. (Cf. table turning, planchette, etc.)

[114]

A good description of *kondola* under the headings *wakondola* and *nondowola* is given by Corbett,[1] who describes the Mang'anja operators. In this same article, he makes the mistake of describing as *wakondola*, the *kondola*. As I have stated above, the *kondola* is an order of medicine men who trap the man who is an incest while in the incest state, but the *wakondola* points him out while he appears as an ordinary man of the village.

[1] E. W. Corbett, 'Native customs in Nyasa,' (Man, London, 1913, vol. 13, p. 30-32).

2: Mitchell E-5 (1946-1949) 1956 FT7 Yao FT7

vomited human flesh.[1] They said that they had a strong headman and that they could trust him; he was a good headman without witchcraft. If he had been a sorcerer they would have kept wedding him until the next morning.

About two hours after sunrise the people gathered and started dancing. At about this time Cimombo was brought out of the hut and put in the grass shed which had been built for the occasion. This was the climax of the ceremony.[2] He sat on a chair in the grass shed with one of his two wives on either side. Makoka then started a chant, exhorting the visitors to come to throw pennies at Cimombo's feet. Some of the people there made speeches about the type of behaviour they would expect from him. Then Nyambi arrived from the court village in a rickshaw. When the noise had subsided he told the people that if they disobeyed Cimombo it meant that they disobeyed the chief. He emphasized the importance of the rank of the new headman. After the speech he presented 12s. to Cimombo which was received on his behalf by Nciombo. Nyambi then left and the ceremony was over, but the people remained to dance and drink beer.

This description of the procedure following the 'coming out of the hut' is somewhat sketchy. The interaction of the headman and his villagers on this formal and ceremonial occasion is of great interest and importance. During the entire ceremony the headman adopts the pose which is appropriate for any Yao initiand. His hands are on his lap or on the arms of the chair and his head is bowed forward with eyes downcast. He neither speaks nor moves. His attendants, when necessary, wipe the sweat off his face or chase away the flies. The other occupants of the mat, who may be his wives, and sometimes his heir, adopt similar postures. In contrast to this, is the behaviour of the villagers who run about shouting wildly, the men discharging muzzle-loading guns, and women ululating in the typical Central African way.

Before the new headman comes out of the hut his mentors

[1] This is a test based on the witchfinds of the Yao, who believe that sorcerers kill relatives with magic and then share out the flesh of their victims with fellow sorcerers in ghoulish feasts.

[2] Called the 'coming out from the hut' (*kulupuka nyumba*). It is of course the first public appearance of the headman in his newly assumed status.

[illegible] The chief, having appointed a day on which the ceremonies shall begin, sends a messenger with a fowl to a medicine-man whom he asks to conduct the ceremonies. The medicine-man is called ol'mishida "he of the tails." He carries his medicines stuffed in the tail-skin of a gnu or zebra and we shall see that his tail or tails play a very important part. Having sent word back to the chief of his acceptance of the invitation, he goes his wife to prepare some fresh maize-oil with which he will consecrate his medicines, and sends out the boys of the village to collect firewood. A big bonfire is made and dancing goes on all that night in his village. Early next morning he returns to the door of his hut where his wife hands him his "tails." He then immediately departs for the village of the chief. His wife wails with her tongue, this being the sign of his departure, and dancing men, some friend (often his brother) who acts as his chief assistant, his wife, and others will go with him.

[illegible] He signals his approach to the chief's village by singing:

"Ee [illegible] [illegible] [illegible] [illegible]"
"I'm at the village! I don't be long!"

As he enters the village, all the women hail his arrival by trilling the tongue (lu-lulate). He goes straight to the open space in front of the chief's house where the chief awaits him. The chief immediately goes into his house and producing a cloth, gives it to the ol'mishida who then places his "tail" on the ground, (ashida, "things put down"); these are the signs of the compact. A house is given to the ol'mishida wherein he may rest and sleep.

That night, all the mothers of the boys who are to undergo their initiation, are called out (ing, round), ground flour for the morrow. Early the next morning, the ol'mishida visits the place where the pounding is going on and collects a little flour from each woman's basket into a small basket he himself carries.

The chief then gives him a cock and a hen, an ear and a hoe, with these he goes off accompanied by the fathers of the cock to the spot where Lopondo will be made. Arrived there, he first points out the spot where his own hut is to be erected. This is quickly built, followed by the shelters for the cock.

The cock and hen are then killed and cooked, also some porridge; the entire hut is cooked; the hoe is not cooked separately. When it is ready, the ol'mishida takes a piece of the hoe from the pot and some porridge from the other pot together in one hand and then throws them into a little hole where his "tail" has been resting. At this spot, Lopondo is made. The ol'mishida then partakes of both again and eats; after he has finished, the other men eat.

[illegible] After the building of the shelters is finished, fire-wood is collected. On the ends of the green shelters figures of animals in green may be strung up on posts, but they have no definite significance.

In the meantime in the village, the chief has had ekiyani (ceremonial flour) prepared. It is made from millet by his head wife, who must not be near a menstrual period.

48. *Gnawa hada ambaka!*
Lying on the rock, here!

This is a slang expression which in full would read, "It is nice and warm lying on a rock in the sun, but it is not so comfortable as being in bed in company with your wife; you may go on waiting but you won't get anything." This might even be said to a dog, wishing on a dog will, every second of food (*Wuk*) to the master's mouth.

49. *Kalapilla nwal ga ahiwa!*
To have hopes of water for nuggets!

It is a custom before lying down to sleep on the floor mat, to take it up and pour both [5.16] [5.19]
leg water on the earth floor to kill any blood-sucking nuggets (*Gungu* flea-nugget, *Andoscorogia*). If you see a pot cooking on the fire, you naturally think there is food being prepared but you may be disappointed; it may only be the pot for heating the water to kill the nuggets. The saying is thus used to a man who has made an assignation and is disappointed but goes on waiting.

50. *Kalawa ngwal*
To bite unbrunch-fruit!

The unbrunch is described by natives as going up to what it will eat, remaining quiet [5.20]
for some moments, and then suddenly taking a bite. This is said of a man who comes up to you smiling and then bits you a hard blow.

Among the Tao or among other tribes that I have positively mentioned, signs of 5.76
salutation to a superior are made by clapping the hands or putting the breast or buttock with one hand, at the same time crouching down. A woman will go off the path and bend, looking away from a superior passing along the roadway.

A person going by the door of a hut where others are sitting, will say "*Kwanaga hanu!* *Ai* the door here." Passing behind anyone, he will say "*Kwanga* *nwal* *Ai* the back!" Meeting anyone on a path, a man will simply say, "*Ishe, here,*" adding perhaps, "*Ka-shala!* all is well?" A child on business on returning to his village after a journey, is greeted [5.21]
by the women with trilling of the tongue (*Ka-lulula*).

Men and wife do not greet each other in the morning. The wife does feed and draws water and places it in the hut for the husband's use but nothing may be said.

When a visitor is entertained and a chicken cooked for a repast, the "pope's nose" is always for the visitor. The right hand only is used in dipping into the common pot. A man of small importance, though replete, will go on making pretence of eating at a common meal by taking very small morsels so that his superior shall finish first, and rise and go away before him.

I may here add the words used by the Tao for the sounds made by various animals. [5.22]
They are interesting to compare with those of other languages:

* "Some or more tribes of British Central Africa," op. cit., p. 200-208.

[illegible]

The dog ..... *[illegible]* (as in bark).
The cat ..... *[illegible]*
The crab ..... *[illegible]*
The lion ..... *[illegible]*
The dish ..... *[illegible]*
The eye ..... *[illegible]*
The sheep ..... *[illegible]* (as in baby).
The goat ..... *[illegible]*
The deer ..... *[illegible]*
The fox ..... *[illegible]*

[illegible] Among the Tiv, clown and obscene language are rare; expressions which appear in other languages all the world over are only used on great provocation and commonly with dire results. This, too, is opposed to the ways of neighboring tribes, the Angwaja and Angami, who freely make use of such expressions as "*Ityiwi yo mulai*" and "*Ityanga wo mulai*" "The genitals of your mother! Cheeks of your mother!"

The following embarrassment of clown and expression of obscenity will be seen to follow very closely upon those in other countries.

1. *Mwimbelami!* (to a girl or woman), *mbulahi!* (to a boy or man) means you are a person who has not been to your Ungwan, and therefore "you are without manners!"

2. *Mwanu mbungami!* an expression to a child meaning "you little wretch," "you nasty little thing!"

3. *Ahuhlu ivai Ngwai!* he sees with the back of his head, he is undiscriminated, i.e. "he is a dirty person!"

4. A man with big ears is hailed "look at your ears like a hound!" (*Lihundu*, a hound).

5. Two women seldom or never engage in or even hear language to a man are the same; the woman, however, is not indebtedness in the art of bitter complaining and nagging.

[illegible] Pulling down the lower eyelid with the finger accompanying some exclamation has nearly the same significance as in European countries, "I am not as green as I look!"

Ka-ungu is to make a sound like "pish" with the mouth, and is a great insult, for which a man will fight.

Sneezing of the lips to one side or to the action to get rid of the sour skin of a fruit, *ka-nuu* (*i-ungu* is an expression of contemptuous disgust.

[illegible] The similarity to European ways is again seen in swearing or taking oath. A Tiv swears by the spirits of his ancestors or by a chief:

"*Chiri ahu Mdungu!*"
"*Dhi! the graves of Mdungu!*"

or he may indirectly name some ancestor:

"*Kyakwilla Ityangi!*" or "*Kyakwilla Ityadar!*"
"I swear by the spirit!" "I swear by the Dead!"

[illegible] on a stone. They explode with a noise like the sound of a gun. The boys send them off, one after the other, imitating fighting, or sometimes bang them down on some one's head. They go off, making the sound *ipiuw!*

Small boys or girls among themselves play a skipping game called *pepejile*. One sings:

[illegible] "*Pepejile pepejile, pepejile pepejile, pepejile pepejile, fumayere wamaji'je pe ndungo pe' wend*
"Bumy ummy ummy ummy ummy ummy. The one who has passed successfully the at the door at his mother's,

Fingerole, fumu, kendi!" etc.,
Ki kiso ship ness, tuiso!" etc.

They all skip together at the word "*ness*," "*tuiso*," and so on. No one knows how many times they are going to be called on to skip, and some one is sure to skip when no word is given and so is caught and made fun of, so the one who has misbehaved.

[illegible] *Likende* (*lee-kende*, to skip): simple skipping when pleased with anything is commonly indulged in, mostly by women and girls.

Little girls play at making little pots. This is called *pondoisinje*, (*lee-pondo-sinje*, to model a pot). They also play at pounding grain, called *ukindoki*, "learning to keep time," the word itself being an imitation of the sounds. Five or six pound in one mortar; in between strokes, they throw the wooden pestles up in the air, catching them again in time.

[illegible] "*Fumpelude kendi pe' ujo wenni je ukulupe!*"
"The one who spoils little mortar that that one which is knocking!"

This is the song of a game played by little girls. One sits in the middle with a stopper on her head, to represent a grain mortar, while the others form a ring round her holding hands. As they sing, the circle at one point swings to, and one of the girls passes in front of the one sitting down, her back to her all the time, the hands passing over her head. This they do one after the other very quickly and anyone who touches the girl in the middle, "who knocks down the mortar," takes the place of the girl in the middle.

[illegible] "*Kwenwenje kwenwenje ujokati ukal*"
"One wives, one wives, sitting all (*unsyllables*)!"

is the song of a game played by a lot of boys together or a lot of girls together; they do not join with one another. Two opposing groups are formed of equal numbers. Each is led by one of the older children and behind him in the rest of the group, each holding on to the skirt of the one in front. The followers of each leader represent his wives. The two parties then sing and manoeuvre for the leader to get at the tail of the other group and "*ulika*" a wife or two from his opponent. It becomes very exciting. As they go faster and faster, some of the tail may get swung off and captured by the other side before they can again join their own.

4:Dennett D-5 (ca. 1909) 1910 FT7 Yao FT7 Marsh FR4

case second might be administered; if adjudged guilty the accused would be burned on a pile of wood.

Evidence is given without taking any oath; a false witness is not punished.

Justice is summarily summary. At Mpondo's, after conviction of adultery with one of the chief's wives, a man's throat was cut on the spot. Drowning was the usual punishment with Mpondo.

Punishments for all offences practically consist payment.

Gestures, Salutations, etc.

The correct salutation among Mashinga Tao and Makanja on meeting is clapping the hands, the hands in front of and at right angles to the body parallel to each other, thumbs against the fingers. The clapping should be continued for ten minutes after having passed; after passing a chief it should be continued for half an hour.

Another form consists in slowly beating the breast with the right hand, the head slightly inclined forward. The lower in station makes salutation first to the higher, a man to a chief, a woman to a man; exception is made in the case of an old woman, who is saluted by the man. Scattered all over the country a raising of one or both arms is a common form of salutation, but is probably only a corruption of the military salute.

Slapping of the arms or thigh with the right hand is also seen, among old men usually. In imploring mercy from, or on the first occasion of meeting, the chief, a man lies prone on the ground and catching the foot of the chief, puts it on his neck—a sign of absolute submission. Women kneel at the approach of a man. Words and expressions of salutation are few—*Moyo* (=heart) being the only chief expression used. Now commonly one hears a word (sounding like *salut*) probably a corruption of *good morning*, and the Swahili greeting *Sabahri* with the double hand-shake of Mohammedans.

A man returned to his village after an absence some awhile, then his wife comes to him and kneeling greets him, *moyo*, her husband returning *moyo*.

Years ago, a man of any importance was received with firing of guns and shouting. A headman is received now with *Mwapulali*, the women wobbling their tongues in their mouths. *Ashwa* are put on the head as a sign of joy.

In the morning the husband and wife do not greet each other, but in the village friends "give each other good morning" (=*Moyo*). On waking in the morning, a woman cracks all her joints (=*Kulim chuka*). She then massages her husband and cracks the joints of his fingers.

One man wishing to see another goes to his house, and squatting outside the door cries "*Ishe!*" three times (=*chuma*), at the same time clapping his hands. If no answer be given he goes away, even though he knows the man is within, an answer meaning that the inmate does not wish to be seen. If invited to enter he does so, the man of the house rises and gives him salutation. He makes small

1: Tew E-4 (no date) 1950 F77 Tao F77

ciputo yearly in the great initiation festival for boys and girls. Consequently as they repeat each year the lessons of their own initiation, the ceremonies are the main vehicle of Tao culture.[1]

There are also two Muslim ceremonies:

(1) *Jando*, the boys' Muslim baptism, which takes about seven days, and is usually worked in with *lupande*;

(2) *Hondo*, the girls' Muslim baptism, which is the same as *jando*, but usually quite separate from *ciputo*. It is important that the wife of a Muslim should have had *hondo* so that she knows how to prepare the food properly at Ramadan.

Menstrual and Cross Taboos

Menstruation is held to be dangerous. A special mat is used by the woman during this time, and is rolled up and kept during the rest of the cycle. The hut is completely replastered after menstruation. Intercourse during menses leads to disease of the sun. Sexual contact is dangerous to persons at certain other periods: during initiation ceremonies, during mourning, and for Indian who have not been through the protective rite. The danger is thought to lie in *ndoka*, a dread disease characterized by swelling. This may be transmitted by salt in the food. Deaths are often attributed to 'salt'. Much of the significance of the mourning is that medicines are prepared which protect the mourners against the dangers attendant on sexual activity.

Burial Rites

News of a death must be sent to the chief by a messenger carrying a single foot. The chief gives a present of calico for wrapping the body, and a goat for the burial men. These are called *mudo*, neighbours unrelated to the dead, who volunteer for certain duties. They prepare the body for burial and carry it in procession to the graveyard outside the village. No uninitiated person is allowed to see the funeral. All who attend the burial are prohibited from sexual intercourse for one month. After this time the prohibition is lifted by a ceremony of beer drinking and feasting, and on the following day all fires in the village are extinguished, and then relit, and the mourners are shaved. A year later beer is brewed for a final ceremony.

For a period after her husband's death a widow is unclean, and has to be purified by ritual intercourse with a man who is paid. The widow is not allowed to remarry for two or three years. A widower leaves his wife's village, after receiving a parting gift. The widows of ordinary persons are not inherited. If a man has himself a 'name' (rank and social position), he has an heir, who inherits also the wives of his predecessor. But if the heir (the maternal nephew) has married a cross-cousin (mother's brother's daughter) he would not consider the wife's mother as his inherited wife.

Before the burial the dead man's hut used to be destroyed, together with his possessions. Immediately afterwards a consultation is held as to whether retaliatory action against sorcerers is called for. The *mudo*'s duties include not only the conducting of the burial, but also the subsequent inquiry and the conduct of the second ceremony, the beer drinking, at which they shave the mourners. A man who has

[1] Male ceremonies for girls' initiation: Chodzi, [illegible]; Chiwaya, [illegible]; Chiwaya and Dzwa, [illegible]; Dzali, [illegible]; Chimbalala, [illegible]; Mwambwali, [illegible]; Wuma, [illegible]; Jakwanu, [illegible].

2: Mitchell E-5 (1946-1949) 1956 FT7 Yao FT7

[2] But I have used illustrative material from other villages where it was more complete or less confusing. In Appendices, I set out genealogies, hut counts, and plans, of the two villages. In the text I use reference numbers in these genealogies, by generation and position in generations, to identify people.

It is necessary to select illustrations because the structural uniformities I wish to describe are often hidden by the idiosyncrasies of particular examples. The general principles of social structure, as I present them here, have been abstracted from my observations over a period of two years, not only in Cikuja and Ali Kasonka villages, but in many others in the Machinga area. I present my illustrations not with any belief that they prove my analysis, but only to help the reader see the principles I describe in the reality of Yao life.

The Field Work

[23] I spent the first two weeks of my stay in Nyasaland talking over my proposed field work with the Administrative officers of the Nyasaland Government. The Provincial Commissioner suggested that I should do a round trip of the Yao area with the District Commissioner at Zomba. After this tour, in consultation with Chief Kawinga and the District Commissioner, I decided that the best place for me to start would be in Chief Chiwindi's area. The District Commissioner then took me to Chiwindi who indicated a site in his court-village where I could pitch my tent.

[24] For the first week I held meetings with the chief and some of the older men of the vicinity and spent most of my time making notes on material culture, 'customs' and history. On the first page of my notes I find that there is a good description of Yao beliefs in sorcery, all described as if it were in the past: a full year was to pass before my informants were prepared to admit that these beliefs were still held. After a week or two of this [25] general activity I decided to try my first village census. The results were hardly encouraging. Often when villagers knew [26] I was coming they dipped away into the bush. Those who were left frequently refused emphatically to answer my questions. Many rumours arose to explain my presence. I heard, for example, that I had been sent by the Government to record the names of those to be taken away as soldiers for the next

2: Mitchell E-5 (1946-1949) 1956 FT7 Yao FT7

war. I heard that I was an American spy, and also that I was a spy for the Portuguese, because Nyasaland, or at least the Yao area of it, was going to become part of Mozambique. I spent much of my enforced idleness during these early months copying down texts in Yao from my clerk and translating them into English.

Towards the end of 1946, when the rains had set in, I decided to move into a vacant house on a tobacco market about five miles from where I had first pitched my tent. I then started to make a census of the nearest village. Here the attitude of the people was markedly different and I established friendly and happy relationships with them. For some weeks I systematically made censuses of the surrounding villages, and got my first insight into the structural principles of Yao villages. I left this area to attend a conference of research officers of the Institute, and when I returned I pitched my tent in the village into which my personal servant had married. By this time I was speaking some of the language and had started to talk to people directly. I now began to establish a set of informants who would come to my tent in the afternoons and dictate texts to me in Yao on various topics of interest, which I immediately translated into English. The mornings I spent out in neighbouring villages. It was during this period that I gradually heard about the various ceremonies that were being performed and was able to attend them. My wife too was able to attend some of the women's ceremonies. Some months later I moved down to Kawinga's area and pitched my tent in one of the largest and most complex villages I could find and made a complete census of it. I chose this village so that it would be sufficiently close for me to attend Kawinga's court, which was the largest in the area. I left the field in September 1947, and in September 1948 returned to Chiwalo's village. I now engaged a new clerk who could speak no English and who came from the village in Chiwalo's area where I had originally settled. During my second trip I visited Jalasi, Kanali and Kalembo chieftdoms, all in different parts of the Yao country, and made village censuses in each.

The procedure I adopted in making village censuses was as follows. Usually I visited the headman a day or so in advance to explain my intention to him. Most of the villages I studied were fairly close to that in which I was camped so that the people

one of Malangu's sons died, after giving birth to quintuplets, some thirty years ago. Deformed children are buried alive. A large number of children is always hoped for and where polygamy is practised, some families are of considerable size, although the mortality among young children is very high. It is, of course, very difficult to state the child-bearing period among natives. It does not start as early as is commonly supposed, and I think the menopause is found within about the same limits as among Europeans.

Death. Natives of Wyandotland live to a good old age. That such is not the case I have found to be one of the many fallacious beliefs concerning native which should be relegated to the realm of exploded theories, as I have pointed out elsewhere.*

Death in old age is recognized as a natural event but apart from this, all sickness and death were formerly held are still to a large extent looked upon as the result of the machinations of some person, an idea which forms the outstanding feature in their belief in witchcraft, sorcery.*

Here I shall mention the ordinary customs in the case of death. During the last hours of a mortal illness, a man is tended by his wife or wives; the head wife she constantly supporting his head on her lap or against her breast. A woman is similarly tended by her mother, sisters, and friends. As unconsciousness sets in and the extremities become cold, they say, "He spirit has gone and only the heart remains alive."

The native does not like the idea of lingering on and a man on his death-bed will say to his sons, "Now watch me that I die quickly." He may take medicine to help him over that time or he may give his sons instructions as to what to do. Should a man linger unconscious for a long time, friends will ask his sons, "Did he give you any instructions?" If he has done so, the sons will then carry them out. This perhaps consists of burying themselves in necklaces left by their father, while they stand on the roof of his house. Sometimes, the natives say of a lingering man, "Ah, perhaps he has eaten of a tortoise's heart!" Knowing the phenomenon of the tortoise's heart and believing that by partaking of it, the same property can be conferred on the heart of a man.

When death is manifest, the body is covered with a cloth by a brother, a son, or some other person in attendance. The eyes are closed, the mouth shut, and at the present time, the body straightened out. This, however, is a recent practice copied from the Anyanja, Europeans, and Mohammedans.

News of the death must be sent to the chief, and a messenger goes to his village where the chief and his people sit in the village open space. He carries a knot in his hand. The presence of a single knot always denotes bad tidings. One of the chief's sons, seeing the stranger approach with the single knot, will jump up and take the knot. He is joined by the others and they go away to the cross-roads where they kill the knot, pluck it, cook it, and eat it. In the meantime, the messenger delivers his news to the chief who will produce from his house about eight yards of white calico; if the deceased has been a chief's supported

* Hugh S. Stanner, "The Burgess of Legues", (Lusaka, April 15, 1954, p. [illegible]). * This idea, p. [illegible].

person, he may also give a gift. The office is to wrap up the body of the dead, the gift is for the undertaker, *sulu*.[1]

Until eight or ten years ago, the Wayan buried their dead in a posture of complete flexion. The preparation of the body after death is carried out by friends from a neighboring village who volunteer for the service. They are known as *sulu*, (*ulug*, *sululu*). Marshmallé[2] thinks the word originally meant relatives; it has essentially the opposite meaning now. The corpse is washed in ordinary water and no embalment is made. The limbs, formerly, were then flexed on the body and at all the joints. The clenched hands were placed under the chin of the bent head or the hands were spread over the face of the flexed head, while the legs were tightly bent at the knees and brought up close against the abdomen. The corpse was recently bound in this position and adorned with a bile-cloth of bark. The body of a man bound stiff and extended was a source of great trouble. Women cups heated, and the body bathed until it was as relaxed as possible. An *ensile* knee would then be applied as was necessary to gain the required degree of flexion, the knees often being broken in the process.

In the case of a woman, her female friends put on her bark-cloth bile covering, but the washing and trussing up of the body were usually done by men unless there were some women particularly skilled in the operation.

The flexed body was then set up on the deceased's sleeping mat within the hut, and from time to time, as long as it remained exposed, it was washed, people coming from other villages to offer their services for this task. Watchers sat continually by the body, the wife and perhaps a brother on either side, while others slept in the hut to take their turn later. The rest of the mourners sat on the veranda about the door.

As soon as the male had finished their work, wailing began, started by the wife and carried on by all the women of the village and the women relatives from elsewhere. Wailing continued all day until about ten in the evening, and then started again between two and three in the morning. This went on for three or four days or was intermittent for a longer time, always commencing with the arrival of a party from another village. I have never heard of four being put on the heads by Tao mourners, as mentioned in *Africana*.[3]

News of a death was always sent to all the relatives, and burial might be delayed to allow for the arrival of those from a distance. Under such circumstances, the body was enclosed in a sealing of bark, the ends being closed by bamboo pegs. Exaggerated signs of grief were sometimes made by the mourners who beat their breasts with their hands while they bounded their heads against the ground or a wall, but the Tao did not indulge in the excesses of the *Sayanja* near Lake Chibya, who practiced a kind of flagellation, the mourners within the house sending any new-comers on the door and beating them with sticks. This treatment was not resented. Women alone did the wailing; a man indulging in such expression would be laughed at. The part in the old days when the native possessed firearms was

[1] See infra, p. 364. [2] Op. cit., vol. 1, p. 180. [3] Ibid.

19: Sanderson D-5 (ca. 1929)1932 F'77 Tan F'77

A-Drum, Central; Religion. **Sanderson.**

A Note on Ceremonial Prostitution among the Wa'Kwa, Nyasaland.

By Kendall Sanderson, *M.D.C.S., F.R.G.S.*

One of the efforts of European influence in Africa is the breaking up of tribal organization and discipline. The rights of the individual being no longer subordinated to the common good, customs formerly observed by the village community as a whole die out, while those affecting the individual are still practised.

This tendency is well seen in the ancient ceremonies of prostitution among the Wa'Kwa which are now rarely performed collectively, though the rules, however lightly "observed," still give to the doctor to obtain the necessary medicines for removing, for instance, the contamination caused by contact with a corpse.

These collective ceremonies have already been described by various writers in respect of both Uyendland and elsewhere,[1] but the Wa'Kwa have not, I think, been given in detail, and the following notes may not, therefore, be altogether valueless.

The *Fipyile* ceremony (*fipyile*, "to pounds") is common to most Bantu tribes. In its simplest form it used to be performed annually by the Wa'Kwa, at the beginning of the twelfth month, most of the months (*lunar*) being kept by means of a "calendar"[2]. The whole village is thoroughly "spring-cleaned," all rubbish

* In this, where the game is played on 10 holes' sight in the sandy, Arabic-speaking Kyor (pronounced), the song is Kyoroh runs:—

Kyoro, kyoro, quantity no margin.
Kyoro, jibbo, Kay mate
Kyoro, gate, where you mate.
Kyoro, jaro, I shall not be there any more.

Words indicated, pronounced, in the hollow hole.

1 Sir Harry Johnston, G.C., "The Bantu Kingdoms" pp. 444 (sic), 1-2-1-0, *Journal Royal, Anthropological Institute*, 1901.

2 Frazer, "Golden Bough" (1), 179, 180.

3 A "calendar" consists of a strong twig in the shape of the moon, or hanging from the gable, on which are threaded twelve pieces of rock, feathers or cowrieds. One of these is moved to the other end of the twig each time a new month is seen.

693 paid by the chief but still advise him, and retain
694 much of the prestige due to their rank, which is inherited. Others have been incorporated as court assessors though they may not actually take part in the duties. Some now combine both sets of duties and function both as councillors and court assessors. Some of the duties of both sets of officials, however, have been taken over by the court clerk and other court functionaries. Although the position of court assessor was part of the old tribal structure, modern court assessors see themselves as occupying a position in a structure largely of White fashioning. I once heard a court assessor when conducting an enquiry into a case of adultery, cut short the perfidity of a witness saying: "None of these long stories. We are conducting this case according to the customs of the Whites."

More illuminating still is the position that the court clerks occupy in the modern structure.
• [212] They are differentiated from the vast majority of the population because they are literate. All of them have been educated, usually in a mission school. A high proportion of them are Ngoni
[213] because more Ngoni are Christian (hence educated) than Yao (see p. 191). Because he can read and write, the chief court clerk is the medium through which the chief expresses himself in writing and the medium through which he gets written information from the Administration and others. The court clerk is therefore in a unique position of knowing all the business that comes into the chief's hand by letter. He, of course, must also write the replies so that he has a very good knowledge of what is going on in the territory. In addition, because of his education and knowledge of the ways of the White people the court clerk often makes a better councillor than the uneducated and naive traditional councillor does. Therefore in certain matters the court clerk, rather than the councillor, is the chief's most important adviser.

693 The various other officials have different
694 functions to perform, frequently of a semi-ceremonial nature. There are sanitary inspectors, well inspectors, etc. The court sergeant who is present at the court now performs many of the

G. Dragoman D-5 (GR. 1989)1919 FFT Tan FFT Matrix: 72-4

[illegible] square into a clean shallow basket or on to a plate. The relish or relish, consisting of vegetables such as beans or a kind of spinach, a little fish or chicken, is cooked in a separate pot, and round these dishes above to eat relish. Washing their left hands in water, they take some of the porridge and making a sausage shape of it, dip it in the relish and then cram it into their mouths.

[illegible] Salt was obtained either from natural deposits or from "salt earth" on a stream bank near Fort Johnston, or from the ashes of burnt longo reeds or sandalwe; by a method of percolation through porous pots.

[illegible] The native rather drinks between meals—water. After eating he may wash his mouth out and clean his teeth, using the frayed end of a piece of wood as a brush.

Alcohol.—With the exception of the people living on the lower river, who drink fermented palm juice/ beer is the common alcoholic beverage. Beer is made from maize (chimangat) or millet (mapira); the strip of the latter is very largely used for beer making; it makes the best beer and is certainly preferred by Angoni.

Grain is prepared by boiling flour with water; after an hour barm (chimbiri) is added fermentation sets in; and it may be drunk the next day; it is the sweet beer, strong or concentrated. On the second day it is again boiled and is allowed to cool; the third day more barm is added (chimbiri); the fourth day fresh grain is made, and the contents of the original pot, now called sponge, is added to it, making two pots of beer. It may be drunk the same day while hot or allowed to cool and taken on the second day.

Food staple.

[illegible]

1. Maize (chimangat), millet (mapira, mawere), rice (mpunga).
2. Cassava—sweet potato.
3. Beans and peas of many varieties.
4. Pumpkins, marrowhead, melons (dzungu, mikoko, chibwandi).
5. Many kinds of leaves growing wild—also pumpkin leaves, of which a kind of spinach is made.
6. Bananas (ndizi-pisi), sugar cane and plants are cooked.
7. Wild nuts, berries, honey.

[illegible]

8. Numbers of small animals are eaten by Chipeta, Angoni, etc. With the spread of Mohammedanism this is going out; rats, mice, bats, rock-rabbits, etc. Chipeta will eat dog, and I once saw one eat baboon. Frogs, shell-fish, snakes, crocodiles, snakes, vultures, eagles, are never eaten.
9. Fish (nsombo), fresh or dried, is much eaten, thirteen varieties being enumerated.
10. Chickens, ducks, wild birds that they may snare.

* Spirits said to be made by distilling from beer and banana and palm juice by means of a pot and a gun barrel.

2: Mitchell E-5 (1946-1949) 1956 FT7 Yao FT7

months November to March inclusive. Diagram 1 shows the distribution of the rainfall during the year. Very little rain falls during other months. The initial rains of the year are ushered in by convectional storms and very heavy downpours. This causes a heavy run-off, flooding of the rivers and lake shores, and much erosion of the parched land which by this time has become

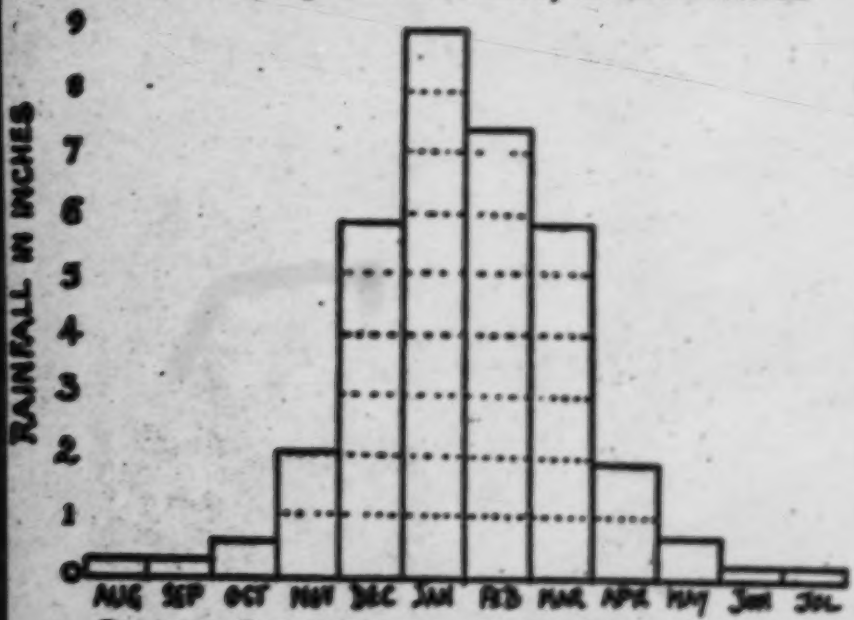

DIAGRAM 1. RAINFALL IN LIWONDE AND FORT JOHNSTON DISTRICTS.
This diagram shows that almost the whole of the rainfall occurs between November and April.

very dusty. During December there is usually little rain for a short period of a week or two. After that the rains change their character and become more steady and drenching. They decrease in March and April, and thereafter, little rain falls.

The Yao concept of the seasons follows this feature of the climate. The year is divided into two seasons, called *caku*, the wet season, and *cau*, the dry season. The wet season is the one in which most agricultural activity is carried out. The gardens are hoed up and planted, weeded and tended, and the crops harvested, between the months of October and May. During

2: Mitchell E-5 (1946-1949) 1956 FT7 Yao FT7

the dry season, in contrast to the busy wet season, there is much visiting and social activities are resumed. Dances and initiation ceremonies also are mostly held during the dry season. The only agricultural work done during this time is the clearing of the bush and the stacking of the brushwood ready for burning.

The temperatures are high. I have no records for the three stations in the area because recording has started only recently. It is hottest during the months just preceding the rains, i.e. September to December, and coldest during May to August. I have never heard of frosts in the area so it is unlikely that the temperature falls below freezing point. Hornby records the mean maximum temperature for Liwonde as 82·3° F. and the mean minimum temperature as 59·3° F. These are for Liwonde station which is in the Shire Valley. The temperature for the plains and the highlands is probably a few degrees less.

Vegetation

The natural vegetation in this area varies from thick rain forest along the permanent watercourses to open grassland in the marshy patches. In forestry reserves and other places where the vegetation has not been cut out, trees 20 to 30 feet high predominate with thin undergrowth. Along the Shire Valley much of the vegetation is untouched, but in the highlands and on the plain most of the unprotected forest has been cut out for garden lands. In the open spaces between trees the land is covered by elephant grass six to eight feet high.

Population

The density of the population in Nyasaland as a whole is high in comparison with that in the surrounding territories.[1] Within the Territory itself the densities in some districts are as high as anywhere in Africa.[2] The population as a whole is concentrated in the highland districts of Dedza and the Shire Highlands. The districts in which I worked are less densely populated than most of the districts in the Southern Province, but of average density

[1] Expressing densities as total population per square mile. Nyasaland, 55·5 (1945); Tanganyika, 17·0 (1946); Portuguese East Africa, 14·5 (1938); Southern Rhodesia, 11·5 (1946); Northern Rhodesia, 5·0 (1946).

[2] Chiradzulu district, 309·8; Cholo, 191·9; Zomba, 152·4. *Nyasaland Census*, 1945, Table 8.

Peas, cowpeas (*Pisum sativum*), are grown in abundance. There are two other varieties, colour (groundnuts), and chinkwaire.

Sweet potatoes: ubinato (*Ipomoea batata*), of which the natives are very fond; they distinguish a red and a white variety, ubinato spanjipie and ubinato spanjiwere.

The tuber-like root of a bush called ngombe is also eaten, likewise the young underground shoots of a palm tree. The leaves of the sweet potato and the leaves of many wild growing plants are collected by the women and cooked like spinach; the flowers of pumpkins are used in a similar way. Of fruits eaten, the bananas, lipombo, tuber-fruit plum. A very large number of species of *Ficus* are grown, including mukumbulu, mikinga, mukoli, mumi mungunga, kubuta a *Ficus* banana, kuipuo a wild banana, and mikunga, the plantain. The pawpaw is found all over the district. There are several varieties of pumpkins, lipungu, including mikunda, shindondoli, and a very large species called mimo ma nguwa, "the crocodile's head." Varieties of cucumbers include lingulu and kulimangulu.

A large number of wild fruits are eaten, among them figs, kulugu (*Ficus*), kaulu (*Cissus*), shiili and lisungu, the fruits of two species of *Landolphia*, mutunga or Kafir oranges (a species of *Strychnos*), shikunda, the fruits of *Hyphaene* (palms), mukumbwa (*Myrianthus*) a wild tree belonging to the mulberry family, and others, mikoma, mukungumbulu, mikundumulu, shingulungulu, shindugulgu, mulundu, lilumulu, etc. The seeds from the heads of kulumbwa (*Typha*) are roasted up and eaten.

All fish are eaten except the mpungu, which always causes urticaria.

The flesh of all the antelopes, of course, sheep and goats is eaten generally; only bushbuck is avoided by some people as it is said to cause a skin eruption. Elephant is shunned by many on account of its rough skin, also rhinoceros because of the ulcers which it often has on its body, and hippopotamus on account of the marks on its back which are thought to be akin to leprosy. People eating the flesh of these animals are supposed often to sicken with leprosy, the pachydermatous skin, the ulceration or anaesthetic depigmented patches of that disease being reproduced, so the case may be. Pig will not pig or wallow on account of the digging habits of these animals. It is thought they may sometimes grub up bodies from graves. These fish taboos may be due to Mohammedan influence. The lion, hyaena, and fox no one would touch, as they are supposed to be connected with sanni,[1] but the heart of the lion might be eaten to acquire courage. Few will touch leopard flesh, but Kazungu's descendants do so. All will eat of the flesh of the serval cat but very few of the common wild cat. The rock rabbit, nyangumire (mbira, Chin.), is refused by most. Yao as it is a "beast without shame," having no tail to hide what should be decently hidden. Very few will partake of the baboon, but monkey is acceptable to many. A few reject porcupine, supposing they will break out in spots, while the zebra may cause stripes, and some will touch the shrew. No one eats mujo, a mouse that is believed to die if it crosses a path. All kinds of rats are eaten, but the shrew-rat and mole-rat only by boys. Snakes

[1] This name, p. 266.

Both before and after the introduction of guns, the Ture used spears, firespits, and bows, ulungu. The spear is a five foot long throwing spear with metal head and wooden shaft. No shield was used. Bows and arrows are made from the wood of the bow or pinkingwale tree. The string is made of tendon. A double-bulbed bow called ulungu ne ulimu was sometimes used, but, I believe, originally came from the Asyungu. The arrows, reputedly, have a metal arrow-head, and were often poisoned with bombe. 221

Hunting. The same weapons are used in hunting: the gun, the spear, and the bow and arrow. Smaller bows and arrows made with bamboo or cane shaft are also employed for shooting birds; one of the arrows has a blunt wooden head and serves to stun the bird. 224 [illegible]

From the Asyungu, the Ture learned the use of a bamyoma for spearing the bimyoma cows. The bamyoma is a heavy spear-head of iron about eighteen inches long, attached to a rope and float. From the Asyungu, also, we learned the use of the falling block with spear for killing hippo. [illegible]

Elephants are caught in staked pits, and the larger antelopes are similarly trapped in pits with the stake sloping towards towards the bottom, so that as the animal falls lower and lower with exhaustion, it is eventually suffocated. 224

Small buck are driven by drge into nets set for long distances in the forest, and then speared or shot. Traps are also set for these smaller antelopes and for many other small animals, rodents, etc. Birds are shot or trapped. Bird-lime is also employed. It is prepared from the juices of a number of trees by pounding the vegetable matter in water; the sticky mass so made is applied to sticks or poles. The sticks are placed near drinking places so that the birds alighting to take water become entangled. The poles are affixed to trees so that they appear to be the topmost boughs; this the native does, recognizing the excessive habit of birds to sit on the very top of trees. The strength of the bird-lime is made according to the size of the bird he wishes to catch. [271] 225

Fishing. I am not sure how far the Ture is a national fisherman. Not long ago he used only a many-pronged spear to catch his fish. Since then, he has acquired from the Asyungu the knowledge of making fish-traps and nets, and of using the fish poison. When the Ture came to live and intermarry among the Asyungu, there was one practice of the latter which they would not adopt and which caused a good deal of ill-feeling. A Mang'anja man coming home after fishing always used to prepare the fish and, having some ready to cook, he cooked others for his wife, bringing her water at the same time to wash her hands. After eating her own fish, she cooked the rest for her husband. A Ture would never cook for his wife. 226 [278 568]

Traps. The following is a list of some of the traps I have found in use among the Ture. The sketches will serve to explain their mechanism better than a lengthy description. Some are very ingeniously made, and merit small similar traps made in other parts of the world. 224

1. *Lukungi lwa limonde*, a trap for the mane-rat (Pl. XIX, fig. 1).

2. *Lukungi lwa ndimali*, a trap for sharp-toothed gnawing animals, so called from

224 [illegible], a joint (of bamboo) which slides down the string sent to the noose so that the captured animal cannot bite or gnaw through the string (Pl. IV, fig. 5; Pl. XXX, fig. 8).

3. *Lukungi* has *mulende* or *shiteme*, a trap for water-rats (Pl. XX, fig. 7).

4. *Lukungi* has *ngunda*, a trap for the partridge (Pl. XX, fig. 8).

203 5. *Chijumbu* also *ijuni*, "the house for birds," also used to trap small animals (Pl. XX, fig. 9).

6. *Lukungi* has *bolowi*, a trap for the *mole* (of guinea fowl) (Pl. XX, fig. 4).

7. *Lukungi* has *shilimuna*, a trap for the *tread* (of the guineafowl); *ku-lumba*: to put the foot down, to tread. The string square is about 9 × 4 inches (Pl. XXI, fig. 6).

8. *Lisuma*, a trap made of split bamboo. A bird going to pick up the grain is caught by the head when the trap is released by the string which the trapper pulls (Pl. XXI, fig. 8).

9. *Luna* has *ijuni* or *ngunu*, a bird-trap made of netting on a hinged frame-work, operated by a string (Pl. XXI, fig. 4).

[24] 10. *Lilimu*, a falling stone trap for mice. Rats are said to pull off the trap with their teeth and are never caught (Pl. XXI, fig. 1).

10a. The same trap set for catching birds (Pl. XXI, fig. 2).

11. *Mulalaga*: *Ishile* = hanging bowl, a noose for small birds, set on trees (Pl. XX, fig. 1).

[26] 12. *Fwel* (*kiswa*) is a very simple *ensilwa* noose consisting of two grains of maize threaded on one end of a piece of string some six inches long, at the other end of which is attached a leaf folded up into the form of a cone. The leaf, sustained by the maize, swallows the two grains and the attached string, so that the cone is drawn over its head; it is then helpless and is easily picked up by the fowler, who has only to pull on the string to remove the leaf.

224 13. *Chipumumbu*, a hollow cylinder of wood with noose activated by a wooden spring, for catching rats (Pl. XXI, fig. 3).

14. *Chiyoto*, a similar trap made of bark, for mice.

15. *Lilimu*: a plaited bamboo cone into which a rat forces its head to get at the bait, but finds, when it tries to withdraw, that it is caught by sharpened pieces of bamboo projecting backwards into the cone (Pl. XX, fig. 6).

227 16. *Mlomyori*, a fish-trap of the same design, from the *Anyanja* (Pl. XX, fig. 5).

17. *Mnjoe*, a fish-trap on the lobster-pot principle, often set in gaps in a fence built across a stream, copied from the *Anyanja* trap called *nsoe* (Pl. XXI, fig. 7).

[17] 18. *Nfjisi*, also I think from the *Anyanja*, consists of a long basket-work, extinguisher-like arrangement which is clapped down over a swarm of small fish; the hand is introduced through an aperture in one side and the fish removed (Pl. XXI, fig. 5).

Trapping and catching of animals is pursued with great glee by small boys. They make many of the traps, particularly the two kinds of *ikhoro*, *ekipuda*, *ekipunda*, *ekimoro*, *ikamoro*, and *ugaro*. *Ikhoro* is set in rat runs and the rats are driven into them (Pl. XX, fig. 4). Digging out rats is a favorite amusement for the boys and brings meat to the pot. May is the best month for this sport. They are adepts at recognizing burrows which have rats inside. Digging is commenced at one entry to the rat-warren, the escape holes being closed with tufts of grass. As they get nearer the rat chambers, they smell the earth and so know when they are quite close to the rats. A bunch of grass is then put in this hole, lighted, and kept aglow by blowing on it. One of the rats will try to bolt and is knocked on the head. The head is then smashed to kill him effectually, and the skin of the tail of the first rat is always pulled off for luck, "so that they may catch many." They will try to guess how many there are going to be, "ten and ten and five and two!" Each rat when caught is hooked under some earth, so that the hawks will not swoop down and carry it off. When they have finished one warren, one of the party is appointed to carry all the rats. He ties a string round his waist, and the rats are slipped underneath it and so secured. They then go on to another; the carrier will bear the whole catch for the day and may, before they have finished, have several strings of rats round his body, one above the other.

Digging out crabs, *ba-kopa ugaba*, is another favorite amusement for children; (*ba-kopa* is to dig up anything like sand which makes a squelching sound). Crabs are never eaten with flour, but always with manioc, the grain beans, "crabs and brown-bread!"

Youths and girls fish with a rod, line, wire hook, and worm, *ba-kopaga ununbu*, to pull up fish. They also catch fish, using the fish poison, *ontoto*. Birds are killed with a bow and a blunt-pointed wooden arrow.

A small boy, seeing a girl or a younger boy with a rub of manioc and wanting it himself, will say, "Let me make a path to the sound!" He will then remove, say a couple of cows of manioc grains for himself, much to the interest of the owner; or "Let me make *ikonko*" (*ikonko* is a shovel hand on the scale), or "Let me make the scale's eyes!" when two ordinary grains are left, surrounded by a simple ring of other grains, as the girl's portion.

Children are taught a little saying about their fingers which reminds one of the "This little pig went to market" of one's infancy. Starting with the little finger, they say:

> "*Ikoko* *kanyinko* *kanyinko!*"
> "This little one (is) the one which cannot draw water!"

Pointing to the ring finger,

> "*Kwikokopo* *ugunyunda!*"
> "This little one's brother (is) the one that picks the nuts!"

To the middle finger,

> "*Ugunyunda* *ununda* *ununda!*"
> "(The brother of) the one that picks the nuts (is) the one who finishes nuts!"

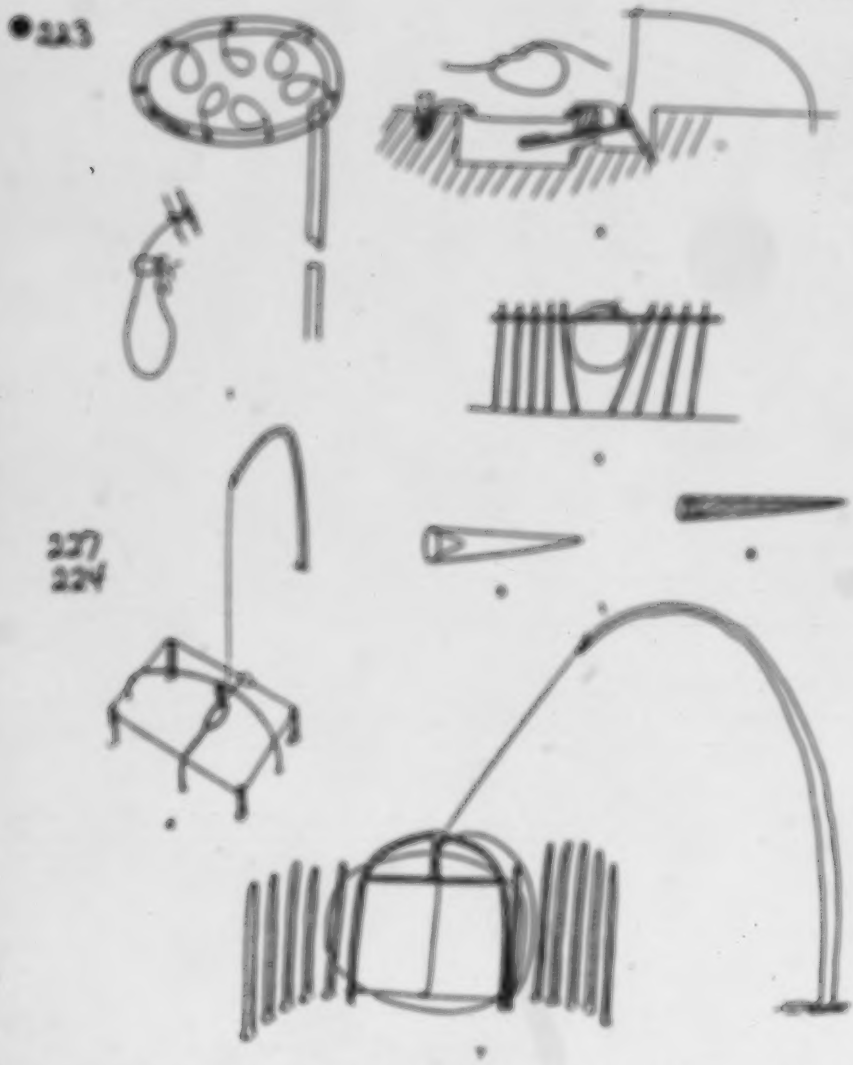

[illegible]

[End Plate 20]

[illegible]

[End Plate 21]

2: Mitchell E-5 (1946-1949) 1956 FT7 Yao FT7

613 members goes to an outsider and grumbles to him about the
757 family squabbles[1] and quarrels. The outsider then takes the
578 opportunity of using this squabble to introduce his sorcery into
626 the lineage. The Yao greatly fear backbiting because of their dread of sorcery and more dreads it more than a village headman, a warden of a sorority-group,[2] or a person in the position of having to keep a matrilineage or section together. These people are continually adjuring the women under them—for it is the women who are believed to be the main culprits—not to fight among themselves; and if they do, not to take their complaints to an outsider but to the senior member of the matrilineage. The significance of this in relation to lineage unity is plain enough.

613 Apart from sorcery, strained relationships between members of
578 a matrilineage are believed to be dangerous for other reasons.
643 Malice may adversely affect people who are in mystically danger-
224 ous states. The most common of these states is pregnancy. If a woman has a quarrel with a matrilineage member while she is pregnant she is likely to have a difficult labour. The Yao say 'the womb has heard these bad words'. Another situation where malice or quarrelling will cause difficulties is in hunting. The luck of the chase is capricious and malice may easily bring bad fortune to an otherwise good hunter. For example, a successful hunter once gave each of his two sisters a piece of venison. Each complained that the other had been given the larger piece and quarrelled vehemently about it for weeks. The hunter now found that no game fell into his traps. He went to a diviner who indicated the quarrel of the sisters as the cause of his failure and told the hunter to get them to 'blow water' (*hupenye*). He did this; good relationships were restored and his traps were filled once more.

613 These deleterious effects, like the curse, are connected in some
578 way with the ancestor spirits. This is sometimes expressed quite
761 clearly when a person is called upon to 'blow water'. A
755 mother who wishes to revoke a curse, a woman who wishes to recant her malice towards her matrilineal relative who is suffering in childbirth, or a man whose sister's son is ill supposedly because

[1] This is called *mimi*, which I have translated as 'backbiting'. This idea is extremely important, as we shall see later.

[2] i.e. those men who are responsible for their sisters and their descendants. See p. 145 ff.

56
778
769

leaves and shoots, at intervals emptying their bodies from side to side and shaking their heads. Massage then ordered all to go and bathe, men and women separately. As they returned from the stream, rain began to fall.

Intercession on behalf of the sick may be made, especially by anyone who is likely to be accused of causing the illness by witchcraft.[1] The man standing with arms outstretched, downcastle and a little in front of his body, the hands replete, takes some water in his mouth and discharges it in a stream on the ground, (probably as a sign of purification of his tongue), and then invoking "all the spirits above," asks that they will intercede to restore health to the sick man and bear witness to his own innocence of any wish to do the sick man injury. *Ka-pepe* is the word meaning to offer sacrifice and prayer.

755
769

Harvesting and hunting are occasions when sacrifices may be offered. It was formerly the custom for the chief to determine the day on which harvesting of millet should begin. On the day appointed, a big drum was beaten in the village and word passed round; then everyone would go down to his garden, gather a head of millet, and bring it back to the village where it was all handed over to the chief's headgirls. After drying and threshing, a little of the grain was laid at the grave of an old chief by one of the reigning chief's advisers, the remainder being again distributed to all the people gathered together in the village meeting-place, who ate it raw. After this ceremony, harvesting began.

769
241
782

In passing through a millet garden, if a child asks his mother to give him some to eat, she plucks a heads or two and reverently laying one at the foot of a *mawa* tree for the spirits or at the base of some other tree, if she cannot see a *mawa*, she gives the rest to the child.

When a hunting expedition makes its first killing, part of the flesh of the animal is laid at the base of a tree as a thank offering to the spirits and in anticipation of further favors to be vouchsafed. All such offerings are supposed by the natives to be partaken of by the spirits, though they are well aware that they do not actually diminish in quantity. There is an interesting point in this connection: any man who has acted as *ndala* (undertaker) to some well-known man may appropriate these offerings. In the case of the hunting offering, he will run round the tree, saying, "I am a hyaena, the spirits will not mind me," and will then take part of the flesh-offering and eat it.

782
224

In the same way, a *ndala* may drink from a grave hour-pot after three days, when the spirits are supposed to have taken what they want.

With the exception of the *mawa* tree above mentioned (*ndima*, Chin.), and possibly another called *mala-ngama* (Chin.), which is never used as firewood and which is supposed to be used by *mazuri*, I do not think there are any sacred trees properly so-called. Miss Werner supposes that many of the big trees (often a species of *Ficus*) in villages are sacred.[2] The truth is, I believe, simply that a village is made naturally round a big tree which conveniently offers its shade for the village meeting place. The spirits of deceased chiefs may

824
778

[1] This *supra*, p. 302.

[2] The natives of British Central Africa, op. cit., p. 66.

Both before and after the introduction of guns, the Yao used spears, lances, and bows, *ulungu*. The spear is a five foot long throwing spear with metal head and wooden shaft. No shield was used. Bows and arrows are made from the wood of the tree or pinkingwale tree. The string is made of tendon. A double-bulbed bow called *ulungu* an *ulumu* was sometimes used, but, I believe, originally came from the Anyanja. The arrows, *mpamba*, have a metal arrow-head, and were often poisoned with bonde.

Hunting. The same weapons are used in hunting: the gun, the spear, and the bow and arrow. Smaller bows and arrows made with bamboo or reed shaft are also employed for shooting birds; one of the arrows has a blunt wooden head and serves to stun the bird.

From the Anyanja, the Yao learned the use of a harpoon for spearing the hippopotamus. The harpoon is a heavy spear-head of iron about eighteen inches long, attached to a rope and float. From the Anyanja, also, was learned the use of the falling block with spear for killing hippo.

Elephants are caught in staked pits, and the larger antelopes are similarly trapped in pits with the sides sloping towards the bottom, so that as the animal falls lower and lower with exhaustion, it is eventually suffocated.

Small buck are driven by dogs into nets set for long distances in the forest, and then speared or shot. Traps are also set for these smaller antelopes and for many other small animals, rodents, etc. Birds are shot or trapped. Bird-lime is also employed. It is prepared from the juices of a number of trees by pounding the vegetable matter in water; the sticky mass so made is applied to sticks or poles. The sticks are placed near drinking places so that the birds alighting to take water become entangled. The poles are affixed to trees so that they appear to be the topmost boughs; this the native does, recognizing the common habit of birds to sit on the very top of trees. The strength of the bird-lime is made according to the size of the bird he wishes to catch.

Fishing. I am not sure how far the Yao is a natural fisherman. Not long ago he used only a many-pronged spear to catch his fish. Since then, he has acquired from the Anyanja the knowledge of making fish-traps and nets, and of using the fish poison. Where the Yao came to live and intermarry among the Anyanja, there was one practice of the latter which they would not adopt and which caused a good deal of ill-feeling. A Mang'anja man coming home after fishing always used to prepare the fish and, having some ready to cook, he cooked others for his wife, bringing her water at the same time to wash her hands. After eating her own fish, she cooked the rest for her husband. A Yao would never cook for his wife.

Traps. The following is a list of some of the traps I have found in use among the Yao. The sketches will serve to explain their construction better than a lengthy description. Some are very ingeniously made, and must recall similar traps made in other parts of the world.

1. *Lukwaji lwa limunda*, a trap for the mass-rat (Pl. XIX, fig. 1).

2. *Lukwaji lwa mbindi*, a trap for sharp-toothed gnawing animals, so called from

[illegible] animals, a joint (of bamboo) which slides down the string until in the noose so that the captured animal cannot bite or gnaw through the string (Pl. IV, fig. 2; Pl. XIII, fig. 3).

3. *Ladungli* has *nadumbi* or *ahiimu*, a trap for water-rats (Pl. XX, fig. 7).

4. *Ladungli* has *ngandi*, a trap for the partridge (Pl. XX, fig. 8).

[illegible] 5. *Chijumbu ahu ijuni*, "the house for birds," also used to trap small animals (Pl. XX, fig. 10).

6. *Ladungli* has *lahoni*, a trap for the nest (of guinea fowl) (Pl. XX, fig. 4).

7. *Ladungli* has *ahikumu*, a trap for the trend (of the guineafowl); *ha-ikumu* to put the foot down, to trend. The string square is about 8 × 4 inches (Pl. XXI, fig. 6).

8. *Limuru*, a trap made of split bamboo. A bird going to pick up the grain is caught by the head when the trap is released by the string which the trapper pulls (Pl. XXI, fig. 8).

9. *Lumu-lun ijuni* or *ngunu*, a bird-trap made of matting on a hinged frame-work, operated by a string (Pl. XXI, fig. 4).

[illegible] 10. *Lilimu*, a falling stone trap for mice. Rats are said to pull off the trap with their tails and are never caught (Pl. XXI, fig. 1).

11a. The noose trap set for catching birds (Pl. XXI, fig. 3).

11. *Mulidapu* (*lidde* = hanging loop), a noose for small birds, set on trees (Pl. XX, fig. 11).

[illegible] 12. *Fuel ilaiwu* (see a very simple snare) noose consisting of two grains of maize threaded on one end of a piece of string some six inches long, at the other end of which is attached a leaf folded up into the form of a noose. The fuel, entered by the maize, swallows the two grains and the attached string, so that the noose is drawn over the head; it is then helpless and is easily picked up by the thief, who has only to pull on the string to remove the leaf.

[illegible] 13. *Chipumumbu*, a hollow cylinder of wood with noose activated by a wooden spring, for catching rats (Pl. XXI, fig. 2).

14. *Chipuru*, a similar trap made of bark, for mice.

15. *Lilumu*: a plaited bamboo cone into which a rat forces its head to get at the bait, but finds, when it tries to withdraw, that it is caught by sharpened pieces of bamboo projecting backwards into the cone (Pl. XX, fig. 6).

[illegible] 16. *Mlungupui*, a fish-trap of the noose design, from the Anyanja (Pl. XX, fig. 3).

17. *Mulipu*, a fish-trap on the lobster-pot principle, often set in gaps in a fence built across a stream, copied from the Anyanja trap called *nunu* (Pl. XXI, fig. 7).

[illegible] 18. *Njini*, also I think from the Anyanja, consists of a long basket-work, antelope-like arrangement which is slipped down over a swarm of small fish; the head is introduced through an aperture in one side and the fish removed (Pl. XXI, fig. 5).

Trapping and sending of animals is pursued with great glee by small boys. They make many of the traps, particularly the two kinds of bliss, *ekpuin*, *ekpuuin*, *ekinam*, *ikanna*, and *upin*. *Ekbee* is set in rat runs and the rats are driven into them (Pl. XX, fig. 4). Digging out rats is a favorite amusement for the boys and brings meat to the pot. May is the best month for this sport. They are adepts at recognizing burrows which have rats inside. Digging is commenced at one entry to the rat warren, the escape holes being closed with tufts of grass. As they get nearer the rat chambers, they smell the earth and so know when they are quite close to the rats. A bunch of grass is then put in this hole, lighted, and kept alight by blowing on it. One of the rats will try to bolt and is knocked on the head. His head is then squashed to kill him effectually, and the skin of the tail of the first rat is always pulled off for luck, "so that they may catch many." They will try to guess how many there are going to be, "two and two and five and two!" Each rat when caught is buried under some earth, so that the hawks will not swoop down and carry it off. When they have finished one warren, one of the party is appointed to carry all the rats. He ties a string round his waist, and the rats are slipped underneath it and so secured. They then go on to another, the carrier will bear the whole catch for the day and may, before they have finished, have several strings of rats round his body, one above the other.

Digging out crabs, *ko-kopu ugulu*, is another favorite amusement for children; *Ko-kopu* is to dig up anything like coal which makes a sparkling sound). Crabs are never eaten with flour, but always with meats, the grain beaten, "crabs and brown bread!"

Youths and girls fish with a rod, line, wire hook, and worm, *ko-kopugu uwaku*, to pull up fish. They also catch fish, using the fish poison, *ntiuin*. Birds are killed with a bow and a blunt-pointed wooden arrow.

A small boy, seeing a girl or a younger boy with a *ntu* of maize and wearing it himself, will say, "Let me make a path to the east!" He will then remove, say a couple of rows of maize grains for himself, south to the interest of the corner, or "Let me make *Ibenko*" (*Ibenko* is a shrewd bird on the south), or "Let me make the south's equal" when two ordinary grains are left, surrounded by a simple ring of other grains, as the girl's portion.

Children are taught a little saying about their fingers which reminds one of the "This little pig went to market" of our's infancy. Starting with the little finger, they say:

> "*Ekuku* *kanpuinin* *kanpuinin*"
> "This little one (is) the one which sweeps down water!"

Pointing to the ring finger,

> "*Kankuiqaw* *ugangwuki*"
> "This little one's brother (is) the one that picks the nuts!"

To the middle finger,

> "*Ejangwuin* *uwuin* *uwuin*"
> "(The brother of) the one that picks the nuts (is) the one who finishes nuts!"

●224

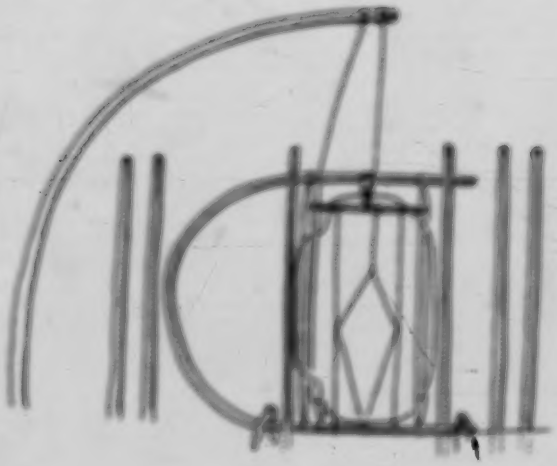

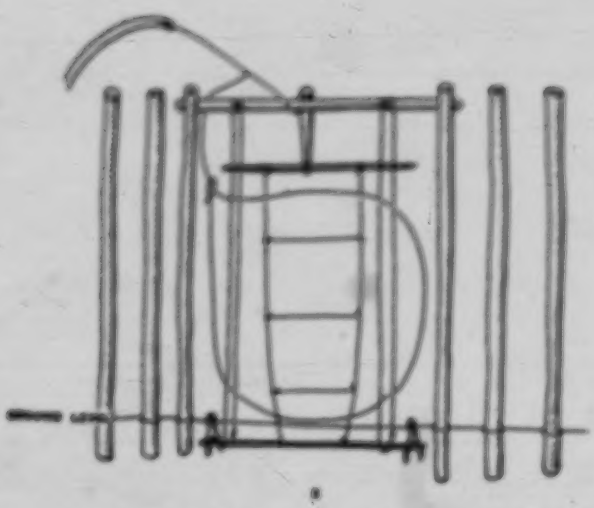

1. [illegible] 2. [illegible]

[End Plate 19]

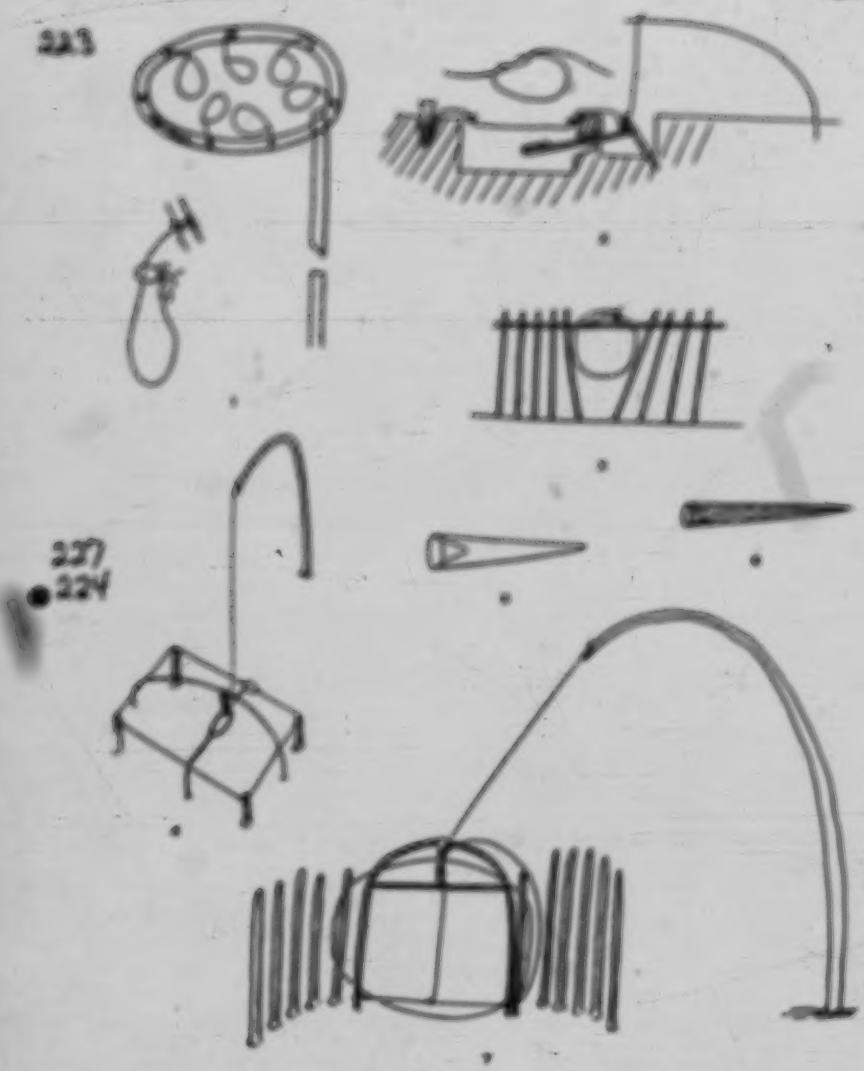

[illegible]

[End Plate 20]

3: Stannus D-5 (ca. 1912) 1922 FT7 Yao FT7

● 224

223
224
227

1, 2, 3. Traps for rats and mice; 4, 4. Bird traps; 5, 7. Fish traps; 8. Trap for guinea fowl.

[End Plate 21]

4: Stannus D-5 (ca. 1909) 1910 FT7 Yao FT7
Marovi FR4

is beaten with branches, or leaves are thrown at him. Men join from all the villages. Next day they set out in line towards the nets they have set, the inaugurator of the hunt in the middle. Game is driven into the nets by the advancing line of men and their dogs and is speared. On the other side of the nets are men set as watchers, who would let down the net at the approach of any big antelope, who would otherwise break it. All the game killed is taken back to the boy clad in the leaves, who watches it in the background. At the end of the hunt (*saimba*) the inaugurator of the hunt chooses his portion after it has all been divided up, and gets a hind leg of every beast killed by the others. The net used is 200 to 400 yards long. Hunting is done in the early morning during the month of July. M 224

The Mañanja and Chipeta did not hunt elephant, but dug game pits. They used bows and arrows. The Yao, Machinga and Amangoche, possessing guns in the old days, used to make big hunting parties, staying away two and three months and killing elephant and other game. The hunter inaugurating the hunt had the first shot at an elephant, and all ivory was his till sold at the coast, when the followers got their proportion of calico brought back. The skins and horns were divided. The flesh was cut into strips and dried over wood fires. The chief has choice of the biggest tusk on the return of the party to the village. Yao elephant were shot in the vicinity of the village, the chief claimed the ground tusk, *i.e.*, the tusk on the side on which the elephant dropped. Before starting on such a hunt the *sin* would be cast to see that they would have good luck. All those taking part would have "medicine" rubbed into little incisions cut on arms, shoulders, and sometimes on body. *Mankwala* (medicine) was also tied on the guns; it consisted sometimes of a number of pieces of wood threaded on a string, or I have seen another made of sun-dried animals' blood and charcoal. Should the wife of anyone of the expedition commit adultery her husband might get killed. A man going to hunt will never have intercourse with his wife the night before, otherwise he would be unsuccessful. M 224 [411]

Bows and arrows are used, the bows being sometimes about 5 to 6 feet long. The "Mediterranean release" is employed, and the arrow rests against the left side of the bow. Three kinds of arrows are carried in the same quiver (*pofo*): *nyanikwa*, a blunt arrow for stunning birds; *nchato*, with a large iron blade; and *upolisa*, with a small poisoned head. M Y 411

The Mañanja use a long-handled, short-bladed spear, usually thrown at a short distance (a few yards), when it is grasped in the hand about the middle. From a further distance (thirty yards) it may be pitched by holding at the extreme end. Traps of various kinds, made of a bent sapling and noose, are commonly used. Dogs are used in hunting to drive, to run down small game and to keep the bigger animals at bay. The only arrow poison used is *chaula*, made from euphorbia juice and other things; it is used in warfare and elephant hunting. The flesh of animals killed with *chaula* is not considered safe to eat. Children from twelve years of age accompany their fathers hunting. M 411 M 224 M [278] [857]

II. The Political Structure
BEFORE THE WHITES CAME

173 (*kuhamula lukongolo*), i.e. to surrender to the chief
643 in the area. Also the chief sent out expeditions
167 to capture slaves or he purchased slaves with the cloth and beads he had exchanged for ivory at the East coast.

643 Within his territory certain privileges and rights were held by the chief and he had certain reli-
421 gious duties to perform in which the unity of the people in the territory was expressed. In general the chief had rights over any ivory either found or hunted in his territory. If a dead elephant were found the tusks belonged to the chief, though he usually rewarded the finder with cloth. If a man killed an elephant the tusk that lay on
[224] the ground belonged to the chief while the other belonged to the killer. The killer's tusk was in-
[439] cluded in the chief's caravan to the coast and its value paid in cloth to the killer when the caravan returned.

643 The chief was also entitled to an annual tribute
657 of food and beer from all villages in his area, but this was used to entertain visitors who came to the court-village.

643 The chief's religious duties lay mainly in propitiating the spirits of his ancestors on occasions
782 when the community at large, in contrast to the chief's own private affairs, was either threatened or directly affected. The most obvious occasion was immediately before the rains came when flour was poured on the tree shrine and the spirits of the ancestors asked for good rains. Later when the rains were over a similar sacrifice was made asking for a good harvest. Sacrifices to the ancestors were also made on two other public occasions. They were made when some calamity had occurred or was believed to be impending. A run of unsuccessful campaigns induced Cingwalugwalu, a son of the Yao chief Mponda near Fort Johnston, to ask his father's father's brother to make sacri-

1: Tew E-4 (no date) 1950 FT7 Yao FT7

132 completely exhausted or reduced to a mere trickle. The average annual rainfall over
[136] the last ten years is 29·75 in. The shore waters of Lake Pamolombe are well stocked
with fish. Both districts are well wooded, with a large variety of timber trees. In the
[137] dry sandy soil where the population is unable to live for lack of water, the prevalent
type is *tsanya*. A line of foothills from Zomba to Chikala are conserved as Forest
Reserves.[1]

MAIN FEATURES OF ECONOMY[2]

241 The Yao are chiefly agriculturists, and in the old days were also hunters. As they
live largely in tsetse-infested areas, they do not keep cattle, except for a few herds
[231] near Fort Johnston and Zomba, in Nyasaland, and on the east of Lake Nyasa,[3] in the
mountains of the Ruvuma valley around Mataka's.[4]

439 Abdullah describes a time when the Yao were economically self-sufficient, making
their own bark-cloth, weaving, burning herbs for salt, and working iron for the tools
they needed. Nevertheless, the tradition of coastward journeys for trading with the
Arabs was well developed before the Europeans came to the country. They used to
trade cattle and salt from the Manganja and Lomwe for tobacco and hoes, and in
[567] exchange for slaves they got from the Arabs gunpowder, guns, swords, beads, coloured
cloths, earthenware, and foodstuffs.[5] Slaving expeditions were among the most
important activities of the chiefs.[6] The old tradition of the absence of the men from
the village owing to these expeditions, is continued in modern times by soldiers and
labour migrants to Southern Rhodesia and the Union. These men send back remit-
tances to the area, but the main population is supported by agriculture. Cash is needed
for purchasing salt and cloth, for paying certain dues and fines formerly paid in kind—
adultery compensation, diviner's and initiation fees—as well as for tax and rent. Con-
sequently, while certain crops, such as tobacco and ground-nuts, are grown for cash,
any food crop is liable to be sold in one form or another in local markets or by the
roadside.

262 The food crops are maize, sorghum, finger millet, sweet potatoes, ground-nuts,
[241] legumes. Fish is an important article of diet. Eggs are believed to cause sterility and
are only eaten by those outside the child-propagating age; milk is disliked and never
consumed.[7] *Termite alates* (flying ants) are a much relished food when they come out
on nuptial flights. Rice is considered a superior food, and is eaten when possible on
ritual occasions.[8]

249 Tobacco is the main cash crop, with individual production under the supervision
439 of the Agricultural Department. The average cash earned per grower in 1943–4 was
£5. 3*s*. This is overwhelmingly an external trade. Ground-nuts, which are sold at
government-controlled markets to licensed buyers, bring in only a few shillings a year
226 to the average seller. Women obtain cash by selling beer. At the lake shore the fishing
439 industry is very important. Natives owning big nets are said to make between £20

[1] Murray, 1932, pp. 147–61.

[2] Unless otherwise stated, the information is from J. C. Mitchell, and relates to the Yao of south Nyasaland.

[3] Young, E., 1877, p. 102.

[4] Livingstone, 1874, pp. 72 and 80.

[5] Abdullah, 1919, pp. 10–11, 26–30.

[6] See Livingstone, 1874, p. 68; Young, E., 1877, p. 139; Thompson, 1882, p. 78; Sclater, 1893, p. 422; Maugham, 2, 1929, pp. 86–7; Laws, 1934, pp. 35–7.

[7] Stannus, 4, 1922, p. 34.

[8] Barker, 1934, p. 14.

1: Tew E-4 (no date) 1950 FT7 Yao FT7

and £30 per annum. It is profitable to carry fresh fish inland by bicycle even as far as Blantyre,[1] as the shore price to the retailer is 4*s.* a load, which later may fetch from 16*s.* to 24*s.*[2] Yao on the south-west lake shore grow an excellent quality rice.[3] Rice is also grown near Lake Chilwa, but is mainly sold in the market organized near the lake shore by the Agricultural Department.

Division of Labour

The man builds the house, hunts, fishes, makes the nets, baskets, grain-store, game-traps, and, in the old days, the bark-cloth. He cultivates the tobacco. He cuts down the trees and may help with the hoeing and harvesting. The woman hoes, muds the floor of the hut, sweeps, cooks, brings firewood, draws water, brews beer, makes the pots and pipes.[4]

Land Usage

There are two types of garden in the Yao areas south of Lake Nyasa: one the ordinary garden in which the staples grow, and second, gardens along the stream beds. These latter are especially valuable for providing out-of-season crops. In addition most householders have a few small plots for tobacco and ground-nuts.

The main garden is cultivated by the slash-and-burn method, common in Central Africa. The Yao, unlike the Bemba, garden occupies the whole area cleared. Burning is done just before the rainy season (October–November). The ash and soil are hoed into elongated mounds and grain is planted along the ridges. Gardens may be cultivated for more than five years. In the second and subsequent years of cultivation the stalks and weeds are piled up and burnt. There are signs of soil impoverishment. The gardens are cleared in August, and heaped to dry for burning. After the burning the seeds are planted in late November. By February and March green maize is available to supplement the diet, and by the end of April the crops are ready to be harvested. The maize is stored in wicker containers, while sorghum is stored in the huts on a stand. Cassava is planted in large mounds made by turning the turfs over, so that the roots are outside the mound and the vegetable matter inside. Legumes are planted in smaller gardens, or interplanted with the main crop. Ground-nuts are stored, after being shelled, in mud-plastered wicker containers, designed to be rat-proof. Tobacco is planted at the sides of the streams for hand-watering in the seedling stage, and then transplanted about January. The leaves are ready to be plucked about April and soon afterwards they are marketed. Sweet potatoes are planted in the rainy season, and are ready for eating in May. The stream gardens yield out-of-season crops—maize, beans, pumpkins, and also sugar-cane, which is used in the initiation ceremonies.

Craftsmanship

The Yao have few skills. All cultivation is by hoe; axes and knives are their only other technological equipment. The men make mats from reeds and palm leaf, and the women make pottery. The huts are strongly built from poles laced with bamboo and plastered with mud. The roof is thatched with grass. Under Arab influence the

[1] *Census of Native Population*, 1931, p. 26.
[2] Codrington, 1898, p. 517.
[3] Stannus, 4, 1922, p. 236; Macdonald, 1882, vol. i, p. 137.
[4] Aplin, 1931, p. 19.

622 hut of one of Meya's wives. Meya's sister wrote a letter to tell him
558 of this and he replied that he could do nothing until he returned.
837 In 1946, Meya returned to be demobilized. The third night after his
166 return he questioned his wives about their fidelity during his absence. They at first held out against him but before long he intimidated them into admitting that they had slept with the village headman. Meya now went to complain to Mapata, who was Cikumba's perpetual mother's brother, and he said that he would come to the village the next day.

When Mapata came he confronted Cikumba with the accusation. Cikumba denied it until Mapata called the women. When they confessed Cikumba was forced to admit his guilt. Mapata now decided to call in an arbitrator, Isa, an important but unrelated headman who lived close at hand. Isa said he would come the following day when the matter could be thrashed out. When Isa and Mapata came they asked the women about the affair in public. They admitted the charge and Cikumba did not deny it. Isa then remonstrated with him for being a bad man and said that he was ashamed to hear about it. Cikumba had to pay £6 10s. to the injured man, Meya, who, however, refused to take it. He argued that Cikumba ought to have behaved as a father to him. But Cikumba had not. He, Meya, could not remain living in the village because his wives would be as Cikumba's wives. Isa said that he could not object because Cikumba had caused the trouble and had broken the village himself. How could he complain? Meya took two-thirds of the huts in the village away with him.

The Headman as a Representative of a Corporate Group

622 The headman is not only responsible for keeping the peace
689 between the members of his village, but he is also supposed to control his members in their relationships with other villages. If members take corporate action against other villages, even if they do so without the consent of the headman, the chief will consider the village headman responsible. This was brought out clearly in the relationships between Cikoja, Mapata and Masimbo in Chiwalo's section.

622 Cikoja and Mapata are two of the more important headmen in
689 Chiwalo's section. Masimbo is a minor village headman who lives
423 in Mapata's village area. The quarrel arose over the question of fishing rights in a small pool lying between the two main villages.
226 This pool was excavated by Cikoja and his villagers in 1924 during

2: Mitchell E-5 (1946-1949) 1956 FT7 Yao FT7

a severe drought, and he claimed the rights over it. One day in 1930, some boys from Mapata village came down to the pool with fish-poison. At about noon some boys from Cikoja's village arrived with their traps. When they saw the Mapata boys using fish-poison they told them to desist and tried to take away the fish. This led to a fight in which knives were drawn. One of Cikoja's boys ran back to tell him, and in anger he came down to the pool with some adults. The Mapata boys now ran back to Masimbo who immediately assembled some men and came to the assistance of the Mapata boys. The two groups joined battle immediately and there were casualties on both sides. Mapata heard about this and came running down to separate them. 622 689 423 226

The next morning they took the dispute to Chiwalo. He started by asking why Mapata had used fish-poison in someone else's pool without permission. Mapata replied that he did not know that his boys had gone down there. He said that Masimbo had told him about the conflict and that he had gone down to stop it. He was not aware of it before. Chiwalo now turned to Masimbo and said, 'Masimbo, you are in the wrong. You have caused the children to suffer. You went to make war because of your children. The people of Mapata, they are in the wrong because they did not report to the owner of the pool.' 622 689 423

When Cikoja was asked if he had anything to say he only replied that he was ashamed of what had happened because he was the first in the area, and until then they had been friends. The conflict had arisen because the children had done something which they did not know was wrong.

Chiwalo ordered Masimbo to pay 5*s.* and Mapata 6*s.* to Cikoja. He then told Cikoja that he should brew some beer and share it with the other two villages so that friendship might be restored and the children might go from village to village without fear. The chief's instructions were carried out and normal amicable relationships were re-established.

The way in which the villages acted as corporate groups is well illustrated by this incident. The responsibility of the village headmen for the activity of their members also emerges. The chief found Masimbo in the wrong for causing the fight, but he also fined Mapata because his boys had used fish-poison. The fines were paid by the village headmen, Masimbo and Mapata, to the village headman Cikoja, for they are the representatives of the corporate groups under them. 622 689

In no other field of village relationships is the corporate 621 423

3: Stanmus D-5 (ca. 1912) 1922 FT7 Yao FT7

Strophanthus is specially reserved for poisoning arrows and it is doubtful if it is ever given by mouth; *Kombe* is the name used in this country, but there are two species of strophanthus in Nyasaland, *Strophanthus kombe* and *Strophanthus courmonti*. The seeds and bark are used and, less commonly, the root. They are mixed with the roots of a shrub called *Nchaimba*, pounded together and boiled, and the liquid used to anoint the arrows. The use of poisoned arrows is a Manyanja custom adopted to some extent by the Yao. 137 278 [107]

A number of poisons are also employed in catching fish, *Ngunga* and *Mtatu* being the most common, also *Kamsimbile Ngochi* (*Nhudzi*, Chin.), and *Chingunga*. [22]

Witchcraft. In my article on the Anyanja,[1] reference is made to witchcraft and *mfiti*. Beside the Nyanja *mfiti* or the Yao *mazwi*, all tribes as far as I know in Nyasaland have firmly fixed among their beliefs, the conception of the supernatural human-flesh eater. It is a little difficult to define the term *mfiti* or *mazwi*, as it has come to have the somewhat generalised sense of one who practices witchcraft, but the original meaning is defined by Scott,[2] a person who has acquired the knowledge of occult medicine by which he can kill his fellow men; "what makes the power so dreaded is not that the *mfiti* exercises this power for reasons of spite but (as is supposed), to eat the body of his victim." It is at once interesting to note that the word *mfiti* does not belong, according to Scott, to the personal class of nouns but to the *pa-ex* class, which seems to imply that they believe a *mfiti* to be something outside the idea of a person. Among the Anyanja in Zomba district, however, the word belongs to the first class of nouns (the personal class) as also does *mazwi* in Chiyao. 754

The natives believe that any man in a village may be a *mfiti* or it might be more correct to say, is capable of changing into a *mfiti*. *Ufiti* is the state of being a *mfiti*; in Chiyao, *uzwi*.

As I have pointed out under *Diseases*, practically all illness and death are thought to be due to the machinations of some person or persons. The inciting motive which may cause a man to compass the death of another may be spite, revenge, etc., or the desires of *uzwi*. Until recent years, when the Government legislated to put down witchcraft, the charges of *uzwi* were everyday occurrences. Whether or not the prevalence of the idea of cannibalism has any substance in correspondingly frequent practice has never been and now probably never will be surely proved. Duff Macdonald believes it to be so.[3] It is true that native graves have been and are still rifled and that the graves of some Europeans have been so opened in the past, as I have learned from eyewitnesses. It seems probable that the graves were tampered with by natives with the object of removing the human remains, possibly to be eaten or to obtain portions of the body to use as charms. Mr. L. T. Moggridge,

[1] 'Notes on some tribes of British Central Africa,' op. cit., p. 302.
[2] Op. cit., p. 545.
[3] *Africana*, op. cit., vol. 2, p. 213-214.

3: Stannus D-5 (ca. 1912) 1922 FT7 Yao FT7

Both before and after the introduction of guns, the Yao used spears, *lipanga*, and bows, *ukanja*. The spear is a five foot long throwing spear with metal head and wooden shaft. No shield was used. Bows and arrows are made from the wood of the *tsas* or *pimbinyolo* tree. The string is made of tendon. A double-bellied bow called *ukanja wa mbama* was sometimes used, but, I believe, originally came from the Anyanja. The arrows, *mpamba*, have a metal arrow-head, and were often poisoned with *kombe*. 411

Hunting. The same weapons are used in hunting: the gun, the spear, and the bow and arrow. Smaller bows and arrows made with bamboo or reed shaft are also employed for shooting birds; one of the arrows has a blunt wooden head and serves to stun the bird. 224 411

From the Anyanja, the Yao learned the use of a harpoon for spearing the hippopotamus. The harpoon is a heavy spear-head of iron about eighteen inches long, attached to a rope and float. From the Anyanja, also, was learned the use of the falling-block with spear for killing hippo. [177]

Elephants are caught in staked pits, and the larger antelopes are similarly trapped in pits with the sides sloping inwards towards the bottom, so that as the animal falls lower and lower with exposition, it is eventually suffocated. 224

Small buck are driven by dogs into nets set for long distances in the forest, and then speared or shot. Traps are also set for these smaller antelope and for many other small animals, rodents, etc. Birds are shot or trapped. Bird-lime is also employed. It is prepared from the juices of a number of trees by pounding the vegetable matter in water; the sticky mass so made is applied to sticks or poles. The sticks are placed near drinking places so that the birds alighting to take water become entangled. The poles are affixed to trees so that they appear to be the topmost boughs; this the native does, recognising the common habit of birds to sit on the very top of trees. The strength of the bird-lime is made according to the size of the bird he wishes to catch. [231] 223

Fishing. I am not sure how far the Yao is a natural fisherman. Not long ago he used only a many-pronged spear to catch his fish. Since then, he has acquired from the Anyanja the knowledge of making fish-traps and nets, and of using the fish poison. When the Yao came to live and intermarry among the Anyanja, there was one practice of the latter which they would not adopt and which caused a good deal of ill-feeling. A Mang'anja man coming home after fishing always used to prepare the fish and, leaving some ready to cook, he cooked others for his wife, bringing her water at the same time to wash her hands. After eating her own fish, she cooked the rest for her husband. A Yao would never cook for his wife. 226 [578 563]

Traps. The following is a list of some of the traps I have found in use among the Yao. The sketches will serve to explain their mechanism better than a lengthy description. Some are very ingeniously made, and most recall similar traps made in other parts of the world. 224

1. *Lukonji lua kimusala*, a trap for the cane-rat (Pl. XIX, fig. 1).

2. *Lukonji lua ukindi*, a trap for sharp-toothed gnawing animals, so called from

3: Stannus D-5 (ca. 1912) 1922 FT7 Yao FT7

Trapping and catching of animals is pursued with great glee by small boys. They make many of the traps, particularly the two kinds of *liliwa*, *chipoto*, *chijumba*, *chitawa*, *liwuma*, and *ngau*. *Lilesa* is set in rat runs and the rats are driven into them (Pl. XX, fig. 6). Digging-out rats is a favorite amusement for the boys and brings meat to the pot. May is the best month for this sport. They are adepts at recognizing burrows which have rats inside. Digging is commenced at one entry to the rat-warren, the escape holes being closed with tufts of grass. As they get nearer the rat chambers, they smell the earth and so know when they are quite close to the rats. A bunch of grass is then put in this hole, lighted, and kept aglow by blowing on it. One of the rats will try to bolt and is knocked on the head. His head is then squashed to kill him effectually, and the skin of the tail of the first rat is always pulled off for luck, "so that they may catch many." They will try to guess how many there are going to be, "ten and ten and five and two!" Each rat when caught is buried under some earth, so that the hawks will not swoop down and carry it off. When they have finished one warren, one of the party is appointed to carry all the rats. He ties a string round his waist, and the rats are slipped underneath it and so secured. They then go on to another; the carrier will bear the whole catch for the day and may, before they have finished, have several strings of rats round his body, one above the other. 224 857

Digging-out crabs, *ku-kopa ngola*, is another favorite amusement for children; (*ku-kopa* is to dig up anything like mud which makes a squelching sound). Crabs are never eaten with flour, but always with *masete*, the grain husks, "crabs and brown-bread!" 226 857

Youths and girls fish with a rod, line, wire hook, and worm, *ku-loposya semba*, to pull up fish. They also catch fish, using the fish poison, *mtutu*. Birds are killed with a bow and a blunt-pointed wooden arrow. 223 411

A small boy, seeing a girl or a younger boy with a cob of maize and wanting it himself, will say, "Let me make a path to the coast!" He will then remove, say a couple of rows of maize grains for himself, much to the interest of the owner; or "Let me make *ilemba*" (*ilemba* is a shaved band on the scalp), or "Let me make the crab's eyes!" when two solitary grains are left, surrounded by a simple ring of other grains, as the girl's portion. 857

Children are taught a little saying about their fingers which reminds one of the "This little pig went to market" of one's infancy. Starting with the little finger, they say: 857 524 539

> "*Akaka kangateka kangateka!*"
> "This little one (is) the one which cannot draw water!"

Pointing to the ring finger,

> "*Kankulagwe njungundo!*"
> "This little one's brother (is) the one that picks the nose!"

To the middle finger,

> "*Njungundo nunala wondu!*"
> "(The brother of) the one that picks the nose (is) the one who finishes men!"

3: Stanzas D-5 (ca. 1912) 1922 FT7 Yao FT7

224 *mkindi*, a joint (of bamboo) which slides down the string next to the noose so that the captured animal cannot bite or gnaw through the string (Pl. IV, fig. 3; Pl. XIX, fig. 2).

3. *Lukonji lua malende* or *chiluwa*, a trap for water-rats (Pl. XX, fig. 7).

4. *Lukonji lua ngwale*, a trap for the partridge (Pl. XX, fig. 3).

223 5. *Chijumbe cha ijuni*, "the house for birds," also used to trap small animals (Pl. XX, fig. 2).

6. *Lukonji lua lukosi*, a trap for the neck (of guinea fowl) (Pl. XX, fig. 4).

7. *Lukonji lua chiliwuta*, a trap for the tread (of the guineafowl); *ku-liwuta:* to put the foot down, to tread. The string square is about 8 × 4 inches (Pl. XXI, fig. 8).

8. *Liwono*, a trap made of split bamboo. A bird going to pick up the grain is caught by the head when the trap is released by the string which the trapper pulls (Pl. XXI, fig. 3).

9. *Luwu lua ijuni* or *ngwu*, a bird-trap made of netting on a hinged frame-work, operated by a string (Pl. XXI, fig. 4).

[224] 10. *Liliwa*, a falling stone trap for mice. Rats are said to pull off the trap with their tails and are never caught (Pl. XXI, fig. 1).

10a. The same trap set for catching birds (Pl. XXI, fig. 2).

11. *Malelepa:* (*lelele* = hanging loose), a noose for small birds, set on trees (Pl. XX, fig. 1).

12. Fowl thieves use a very simple contrivance consisting of two grains of maize threaded
[674] on one end of a piece of string some six inches long, at the other end of which is attached a leaf folded up into the form of a cone. The fowl, enticed by the maize, swallows the two grains and the attached string, so that the cone is drawn over its head; it is then helpless and is easily picked up by the thief, who has only to pull on the string to remove the leaf.

224 13. *Chiguwembe*, a hollow cylinder of wood with noose activated by a wooden spring, for catching rats (Pl. XXI, fig. 5).

14. *Chipoto*, a similar trap made of bark, for mice.

15. *Lilesa:* a plaited bamboo cone into which a rat forces its head to get at the bait, but finds, when it tries to withdraw, that it is caught by sharpened pieces of bamboo projecting backwards into the cone (Pl. XX, fig. 6).

227 16. *Mkungwi*, a fish-trap of the same design, from the Anyanja (Pl. XX, fig. 5).

17. *Mwipu*, a fish-trap on the lobster-pot principle, often set in gaps in a fence built
[177] across a stream, copied from the Anyanja trap called *wowo* (Pl. XXI, fig. 7).

18. *Njisi*, also I think from the Anyanja, consists of a long basket-work, extinguisher-like arrangement which is clapped down over a swarm of small fish; the hand is introduced through an aperture in one side and the fish removed (Pl. XXI, fig. 6).

3: Stannus D-5 (ca 1912) 1922 FT7 Yao FT7

223

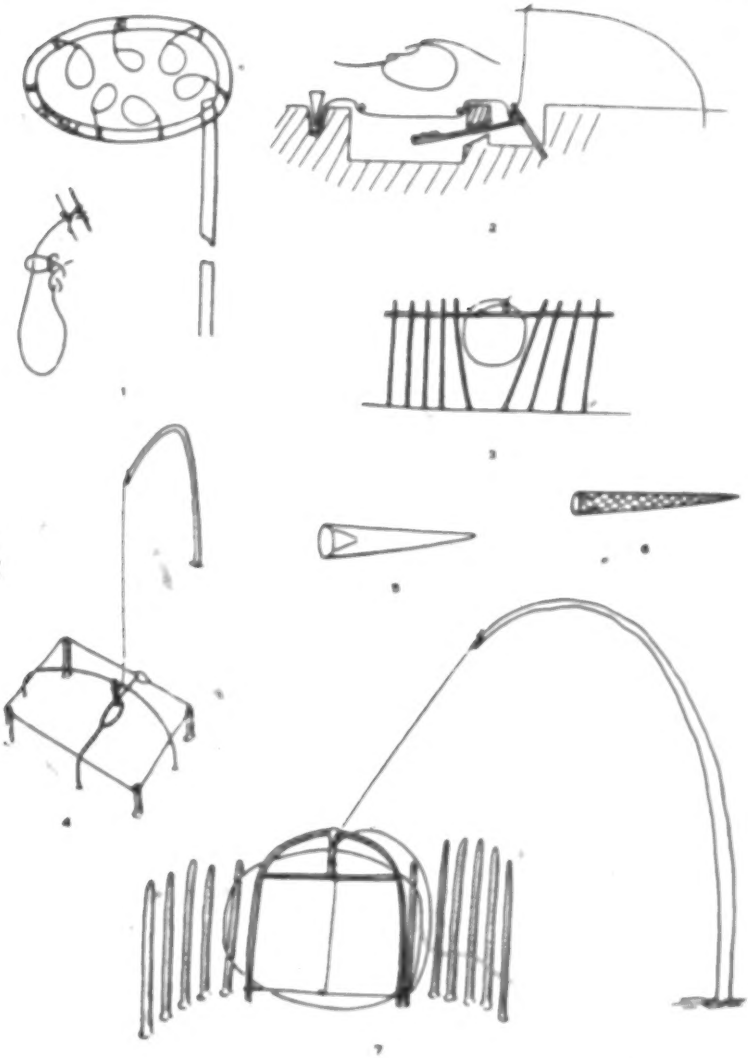

227
224

1-6, Bird traps; 4, Trap for guinea fowl; 5, Fish-trap; 6, Rat trap; 7, Trap for the water-rat

[End Plate 20]

224

1

2

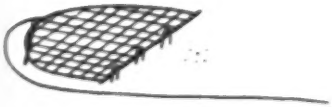

4

223
224
●227

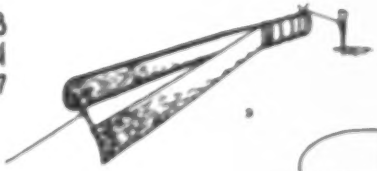

3

6

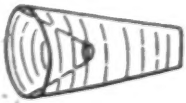

7

8

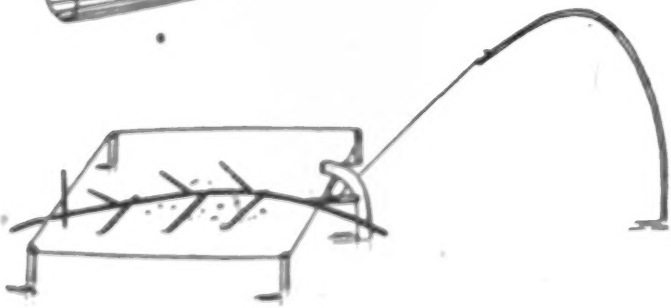

9

1, 2, 3, Traps for rats and mice; 4, 5, Bird traps; 6, 7, Fish traps; 8, Trap for guinea pigs.

[End Plate 21]

1: Tew E-4 (no date) 1950 FT7 Yao FT7

132 completely exhausted or reduced to a mere trickle. The average annual rainfall over the last ten years is 29·75 in. The shore waters of Lake Pamolombe are well stocked [136] with fish. Both districts are well wooded, with a large variety of timber trees. In the [137] dry sandy soil where the population is unable to live for lack of water, the prevalent type is *tsawya*. A line of foothills from Zomba to Chikala are conserved as Forest Reserves.[1]

MAIN FEATURES OF ECONOMY[2]

241 The Yao are chiefly agriculturists, and in the old days were also hunters. As they live largely in tsetse-infested areas, they do not keep cattle, except for a few herds [231] near Fort Johnston and Zomba, in Nyasaland, and on the east of Lake Nyasa,[3] in the mountains of the Ruvuma valley around Mataka's.[4]

439 Abdullah describes a time when the Yao were economically self-sufficient, making their own bark-cloth, weaving, burning herbs for salt, and working iron for the tools they needed. Nevertheless, the tradition of coastward journeys for trading with the Arabs was well developed before the Europeans came to the country. They used to trade cattle and salt from the Manganja and Lomwe for tobacco and hoes, and in [567] exchange for slaves they got from the Arabs gunpowder, guns, swords, beads, coloured cloths, earthenware, and foodstuffs.[5] Slaving expeditions were among the most important activities of the chiefs.[6] The old tradition of the absence of the men from the village owing to these expeditions, is continued in modern times by soldiers and labour migrants to Southern Rhodesia and the Union. These men send back remittances to the area, but the main population is supported by agriculture. Cash is needed for purchasing salt and cloth, for paying certain dues and fines formerly paid in kind—adultery compensation, diviner's and initiation fees—as well as for tax and rent. Consequently, while certain crops, such as tobacco and ground-nuts, are grown for cash, any food crop is liable to be sold in one form or another in local markets or by the roadside.

262 The food crops are maize, sorghum, finger millet, sweet potatoes, ground-nuts, [241] legumes. Fish is an important article of diet. Eggs are believed to cause sterility and are only eaten by those outside the child-propagating age; milk is disliked and never consumed.[7] *Termite alates* (flying ants) are a much relished food when they come out on nuptial flights. Rice is considered a superior food, and is eaten when possible on ritual occasions.[8]

249 Tobacco is the main cash crop, with individual production under the supervision 439 of the Agricultural Department. The average cash earned per grower in 1943–4 was £5. 3*s*. This is overwhelmingly an external trade. Ground-nuts, which are sold at government-controlled markets to licensed buyers, bring in only a few shillings a year 226 to the average seller. Women obtain cash by selling beer. At the lake shore the fishing 439 industry is very important. Natives owning big nets are said to make between £20

[1] Murray, 1932, pp. 147–61.

[2] Unless otherwise stated, the information is from J. C. Mitchell, and relates to the Yao of south Nyasaland.

[3] Livingstone, 1874, pp. 72 and 80.

[4] See Livingstone, 1874, p. 68; Young, E., 1877, p. 139; Thompson, 1882, p. 78; Schuler, 1893, p. 422; Maugham, 2, 1929, pp. 86–7; Lows, 1934, pp. 35–7.

[5] Bannon, 4, 1922, p. 34.

[6] Young, E., 1877, p. 102.

[7] Abdullah, 1919, pp. 10–11, 26–30.

[8] Barker, 1934, p. 14.

APPENDIX A

ECONOMIC DATA

249
433
435

Amount and Value of Tobacco bought in Jalasi–Kawinga Areas 1942–49

Year	Growers	Amount in lbs.	Cash Value £	Av. Price per Grower (pence per lb.)	Lbs. per Grower	Cash per Grower £ s. d.
1941/2 .	1055	393,964	6695	4·08	373	6 6 9
1942/3 .	2106	465,477	7044	3·02	221	4 0 0
1943/4 .	1792	464,929	8025	4·15	259	4 8 5
1944/5 .	1246	269,212	3067	2·84	216	2 9 3
1945/6 .	1074	127,237	6471	12·41	119	6 0 6
1946/7 .	918	116,590	4020	8·28	127	4 7 5
1947/8 .	1570	132,832	5035	9·18	85	3 4 3
1948/9 .	1315	171,865	5206	9·60	130	4 0 0

241
433
435

Agricultural Produce bought in Kawinga–Jalasi Areas at Namwera, Liwonde, Mlomba, Ntaja, Nyambi, and Masuku Markets. Average for the Years 1945–47 inclusive

(in 1000 lb.)

Year	Maize	Groundnuts	Rice	Beans
1945	23·6	1395	94·0	31·0
1946	101·4	1268	60·4	34·6
1947	nil	1465	122·8	2·8
Total	125·0	4128	277·2	68·4
Average . . .	41·6	1376·1	92·4	22·8

231

Livestock Census in Kawinga–Jalasi Areas, 1947

(Jalasi, Kawinga, Liwonde and Nyambi, and Malemia areas)

Goats	Sheep	Pigs	Cattle
4319	2498	4	225*

* Most of these are owned by White settlers.

3:Stanaua D-5 (ca. 1912) 1922 FT7 Yao FT7

and the baskets and pots. A wooden dish *ndisi* may be seen occasionally, but of late years, this has been generally replaced by enamelled articles. 415 [177]

Around the entire hut, or simply enclosing a yard behind it, there is often a fence about five feet high. In the enclosure thus formed, many household duties are performed, such as the pounding and sifting of grain. The grain store *nyuwo* often stands in this yard with the pigeon-loft and possibly a hen-house or goat kraal; these are sometimes found in the open space at the front of the house. If a grain store is built within the hut itself, it is then known as *mbunga*. Near the pigeon-loft will be seen a pole with prongs supporting an old pot with water for the pigeons to drink. In a tree in the bush nearby, there may stand a beehive, consisting of a bark cylinder. Similar cylinders are sometimes used as pigeon-houses. 361 343 [231]

The large pots for brewing beer are usually set in the yard or on the back veranda, together with a basket of split bamboo for carrying fowls, *chitetete* (Yao and Chin.). 415

Gourds. Gourds are grown in the village for use as vessels of various kinds. Different shapes serve different purposes; names are given them according to use rather than shape, though these more or less coincide. Ladles for water or beer, *mazuulo* or *ngwo* (*nzuuro* or *chibo*, Chin.) are usually long-handled gourds (Pl. XIV, figs. 7, 8, 9). Drinking vessels for beer, etc. *chipunda* and a specially large one, *ntumba* are usually of the shape illustrated in Plate XIV, fig. 1; sometimes they are like fig. 5, but this shape is more commonly used for water. *Lipunka*, the type illustrated by fig. 2, is also used for drinking or for holding gruel. Oil flasks, *chinsi* (*insya*, Chin.), are usually of the double-bellied type (figs. 4 and 6). Salt bottles, *chitumbu* (*chipuru*, Chin.), are similar to oil flasks. Rattles, *nsuju*, used at dances etc., are also made from gourds, often from those with tuberosities (fig 3). Other uses for gourds include pipes, snuff-boxes, enema funnels, and resonators for musical instruments.

Pottery. The art of pot-making appears to have been known to the Yao for a very considerable period. There is no history relating to its introduction among them. The art is in the hands of the Yao women. As among all Nyasaland tribes, a particular kind of clay is used and no admixture with any binding substance is made. The pots are simply moulded by hand from base to brim and, without the aid of any wheel or other device, wonderful symmetry is attained. 323

After drying, the pots are fired by being set on their bases on the ground and a wood fire is made round and above them. They are then sprinkled with an infusion of the *nyungwe* or *ntumbi* tree, a head of millet being used for the purpose, after which the pots are set upon a fire and millet husks are thrown into them and allowed so to be incinerated. These customs, a kind of christening of the pots, "insure their turning out well."

No glaze of any kind is used, but they are sometimes coloured red by boiling with a pigment called *ngwera*, prepared from a red sediment found in sluggish streams. The preparation of *ngwera* is in the hands of men and women who make a trade of it, such as a man called

3: Stannus D-5 (ca. 1912) 1922 FT7 Yao FT7

Both before and after the introduction of guns, the Yao used spears, *lipunga*, and bows, *ulunja*. The spear is a five foot long throwing spear with metal head and wooden shaft. No shield was used. Bows and arrows are made from the wood of the *tsau* or *pimbinpinitree*. The string is made of tendon. A double-bellied bow called *ulunja wa mkawa* was sometimes used, but, I believe, originally came from the Anyanja. The arrows, *mpondo*, have a metal arrow-head, and were often poisoned with *kombe*. 411

Hunting. The same weapons are used in hunting: the gun, the spear, and the bow and arrow. Smaller bows and arrows made with bamboo or reed shaft are also employed for shooting birds; one of the arrows has a blunt wooden head and serves to stun the bird. 224 411

From the Anyanja, the Yao learned the use of a harpoon for spearing the hippopotamus. The harpoon is a heavy spear-head of iron about eighteen inches long, attached to a rope and float. From the Anyanja, also, was learned the use of the falling block with spear for killing hippo. [177]

Elephants are caught in staked pits, and the larger antelopes are similarly trapped in pits with the sides sloping inwards towards the bottom, so that as the animal falls lower and lower with exhaustion, it is eventually suffocated. 224

Small buck are driven by dogs into nets set for long distances in the forest, and then speared or shot. Traps are also set for these smaller antelope and for many other small animals, rodents, etc. Birds are shot or trapped. Bird-lime is also employed. It is prepared from the juices of a number of trees by pounding the vegetable matter in water; the sticky mass so made is applied to sticks or poles. The sticks are placed near drinking places so that the birds alighting to take water become entangled. The poles are affixed to trees so that they appear to be the topmost boughs; this the native does, recognising the common habit of birds to sit on the very top of trees. The strength of the bird-lime is made according to the size of the bird he wishes to catch. [231] 223

Fishing. I am not sure how far the Yao is a natural fisherman. Not long ago he used only a many-pronged spear to catch his fish. Since then, he has acquired from the Anyanja the knowledge of making fish-traps and nets, and of using the fish poison. When the Yao came to live and intermarry among the Anyanja, there was one practice of the latter which they would not adopt and which caused a good deal of ill-feeling. A Mang'anja man coming home after fishing always used to prepare the fish and, leaving some ready to cook, he cooked others for his wife, bringing her water at the same time to wash her hands. After eating her own fish, she cooked the rest for her husband. A Yao would never cook for his wife. 226 [578 568]

Traps. The following is a list of some of the traps I have found in use among the Yao. The sketches will serve to explain their mechanism better than a lengthy description. Some are very ingeniously made, and most recall similar traps made in other parts of the world. 224

1. *Lukonji lwa lituwale*, a trap for the cane-rat (Pl. XIX, fig. 1).
2. *Lukonji lwa mbindi*, a trap for sharp-toothed gnawing animals, so called from

3:Stannus D-5 (ca. 1912) 1922 FT7 Yao FT7

301 of bamboo fastened together at one end on the flat side by binding with string, the free ends being sharpened to form the teeth of the comb. If the fastened end is ornamented with beads sewed on in patterns, the comb is called *lisemale* (*lu-osemala*, to comb). *Lisemale lia*
[824] *shinpembete* from *lu-upembete*, to be sticky, is the name of a small comb worn purely for ornament. On either side of the base of this comb, pieces of wood variously shaped are glued with the sticky juice from the root of the *shinpembete* tree. In this way, a sort of inlay is produced. Pieces of tin cans are sometimes substituted for wood. Women occasionally wear in their hair the small *chiwende* knife used for tattooing and shaving.

302 The native takes readily to perfumes of European introduction, but previously he was
[177] not an entire stranger to the use of such essences. *Mboka*, the bulbous root of a kind of grass which grows near water, contains some aromatic principle which has a pleasant odor. The stem is bent around and fixed into the bulb; this is then covered with beads and slung around the neck. *Mlunguse*, the Mlanje cedar, is also used, as well as the fruit of a shrub called *chiungue*. These substances are scraped into the castor oil used for anointing, and give it a pleasant odor.

No pigments are used on the body. As a sign of great rejoicing, the head and face and perhaps the whole body are covered with ashes, but the natives do not even paint the face with flour on ceremonial occasions.

301 Bands of beadwork are worn around the head, either as a simple band or a band finished off with a bunch in one spot, or with a tassel. Finger rings are worn made of ivory, eland hoof and horn, lead, and iron wire. There is also a great variety of bracelets and anklets, a list of which is given below.

Chipumbe: made of plaited grass, worn chiefly by little girls and women who cannot afford more expensive bracelets. As many as half a dozen may be worn on the wrist.

Likungula (pl. *makungula*): single circles of solid brass, one half to three quarters of an inch in diameter, worn by women usually as anklets, one or two on each limb. They may still be seen on some of the old women, but as they cause much discomfort, they have gone out of fashion. A man used to be very proud to see his wife adorned with so much wealth and she was content to be so hobbled by her vanity. The hammering up and pulling open of the *likungula* circle in order to remove it cost a fowl.

Chilungu: a brass bracelet of small calibre; *ilungu* (pl.) signifies a spiral cylinder made from the same thick brass wire covering the entire forearm.

Likwinjili: like *chilungu* of thin brass or iron wire, worn on arms and ankles.

Ching'onde: a bracelet of fine brass wire wound round a circular core. All the brass comes from the coast.

Likoso: a large ivory bracelet worn by men and women.

[237] *Ulungu:* ("stiff tail hairs of an animal"), the bracelet made of the tail hairs of the elephant or the gnu.

Likoko: the bracelet made from elephant hoof.

3:Stanner D-5 (ca. 1912) 1922 FT7 Yao FT7

Women stick on a small spit a pretty green and white beetle, one of the *Cetoniidae*. The free end of the spit is then held between the teeth. At different positions on the stick, the humming of the impaled insect gives rise to different notes. The beetle is named *chingwangwanga* or *chimmmm* (*mangalire*, Chin.). The wing-covers of another beetle, *matchetoke*, a *Lamellicorn*, are used by women for the making of a musical instrument. The wing-covers of some twenty of these insects are threaded on a string arranged round the shoulders and feet of the player as she sits on the ground. The string on each side, as it passes from the shoulder to the foot of the same side, is plucked by the fingers of the opposite hand, different notes being obtained by different degrees of tension put on the string by pressure with the feet. The wing-covers give a buzzing quality to the notes which all natives like. 534 237

Mention should also be made of the horn, *lipenga*, commonly made of a long piece of reed or bamboo with a trumpet-shaped end, made out of a portion of a gourd. Antelope horns are also used. The horn is blown on journeys. [484]

Dancing. Dancing among the Yao, as among many other peoples, is the outcome of the pleasure experienced in rhythmical movements. The first accompaniment was probably the clapping of hands to mark time, followed by some exclamatory sounds more or less prolonged and occurring at regular intervals. Later, there was probably some refrain and, later still, drums were added to mark time, and songs formed an additional accompaniment. I believe that, here, dancing has always been an expression of pleasure and happiness and has been secondarily introduced at many ceremonies. In the majority of cases, such ceremonies were occasions of joy, the only exception being at funerals, but there I think their introduction was rather as a means of passing the time and avoiding silent brooding than as any real part of the rite. 535

The names given to various dances indicate their time or rhythm, and are, therefore, comparable to our own words, waltz, two-step, etc. There may be a number of airs for each time, and many sets of words to each air. The time may be given by clapping only, or by the addition of drums. Anyone acquainted with these dances, hearing drumming in the distance, can at once recognise the dance that is going on.

The drums which are used at dances (Pl. XXII), are made of a hollowed-out log of wood with a skin tambour stretched over the mouth of the drum and fixed by wooden pegs. On the tambour is smeared a layer of beeswax. The tambour is tightened by warming over a fire, so that the correct note is obtained; a fire is always kept burning close to the spot where drums are being played. 534 535

Likuti: a drum shaped somewhat like a native flour mortar, three to six feet high with the tambour one to two feet in diameter. The drum usually lies on the ground, the player sitting on the barrel of the drum, or he may have it suspended from him by a cord, the body of the drum dragging on the ground between his legs. It is played with both hands and gives a deep, resonant note, "*ki, ki, ki*" (Pl. XXII, figs. 12, 13). 534

1: Tew E-4 (no date) 1950 FT7 Yao FT7

132 completely exhausted or reduced to a mere trickle. The average annual rainfall over
the last ten years is 29·75 in. The shore waters of Lake Pamolombe are well stocked
[136] with fish. Both districts are well wooded, with a large variety of timber trees. In the
[137] dry sandy soil where the population is unable to live for lack of water, the prevalent
type is *tsanya*. A line of foothills from Zomba to Chikala are conserved as Forest
Reserves.[1]

MAIN FEATURES OF ECONOMY[2]

241 The Yao are chiefly agriculturists, and in the old days were also hunters. As they
live largely in tsetse-infested areas, they do not keep cattle, except for a few herds
[231] near Fort Johnston and Zomba, in Nyasaland, and on the east of Lake Nyasa,[3] in the
mountains of the Ruvuma valley around Mataka's.[4]

439 Abdullah describes a time when the Yao were economically self-sufficient, making
their own bark-cloth, weaving, burning herbs for salt, and working iron for the tools
they needed. Nevertheless, the tradition of coastward journeys for trading with the
Arabs was well developed before the Europeans came to the country. They used to
trade cattle and salt from the Manganja and Lomwe for tobacco and hoes, and in
[567] exchange for slaves they got from the Arabs gunpowder, guns, swords, beads, coloured
cloths, earthenware, and foodstuffs.[5] Slaving expeditions were among the most
important activities of the chiefs.[6] The old tradition of the absence of the men from
the village owing to these expeditions, is continued in modern times by soldiers and
labour migrants to Southern Rhodesia and the Union. These men send back remit-
tances to the area, but the main population is supported by agriculture. Cash is needed
for purchasing salt and cloth, for paying certain dues and fines formerly paid in kind—
adultery compensation, diviner's and initiation fees—as well as for tax and rent. Con-
sequently, while certain crops, such as tobacco and ground-nuts, are grown for cash,
any food crop is liable to be sold in one form or another in local markets or by the
roadside.

262 The food crops are maize, sorghum, finger millet, sweet potatoes, ground-nuts,
[241] legumes. Fish is an important article of diet. Eggs are believed to cause sterility and
are only eaten by those outside the child-propagating age; milk is disliked and never
consumed.[7] *Termite alates* (flying ants) are a much relished food when they come out
on nuptial flights. Rice is considered a superior food, and is eaten when possible on
ritual occasions.[8]

249 Tobacco is the main cash crop, with individual production under the supervision
437 of the Agricultural Department. The average cash earned per grower in 1943–4 was
£5. 3*s*. This is overwhelmingly an external trade. Ground-nuts, which are sold at
government-controlled markets to licensed buyers, bring in only a few shillings a year
226 to the average seller. Women obtain cash by selling beer. At the lake shore the fishing
439 industry is very important. Natives owning big nets are said to make between £20

[1] Murray, 1932, pp. 147–61.
[2] Unless otherwise stated, the information is from J. C. Mitchell, and relates to the Yao of south Nyasaland.
[3] Livingstone, 1874, pp. 72 and 80.
[4] See Livingstone, 1874, p. 68; Young, E., 1877, p. 130; Thompson, 1882, p. 78; Sclater, 1893, p. 402; Maugham, R., 1909, pp. 86–7; Lewis, 1934, pp. 35–7.
[5] Bentzon, A., 1902, p. 34.
[6] Young, E., 1877, p. 102.
[7] Abdullah, 1919, pp. 10–11, 28–30.
[8] Barker, 1934, p. 14.

and £30 per annum. It is profitable to carry fresh fish inland by bicycle even as far as Blantyre,[1] as the shore price to the retailer is 4*s.* a load, which later may fetch from 16*s.* to 24*s.*[2] Yao on the south-west lake shore grow an excellent quality rice.[3] Rice is also grown near Lake Chilwa, but is mainly sold in the market organized near the lake shore by the Agricultural Department.

Division of Labour

The man builds the house, hunts, fishes, makes the nets, baskets, grain-store, game-traps, and, in the old days, the bark-cloth. He cultivates the tobacco. He cuts down the trees and may help with the hoeing and harvesting. The woman hoes, muds the floor of the hut, sweeps, cooks, brings firewood, draws water, brews beer, makes the pots and pipes.[4]

Land Usage

There are two types of garden in the Yao areas south of Lake Nyasa: one the ordinary garden in which the staples grow, and second, gardens along the stream beds. These latter are especially valuable for providing out-of-season crops. In addition most householders have a few small plots for tobacco and ground-nuts.

The main garden is cultivated by the slash-and-burn method, common in Central Africa. The Yao, unlike the Bemba, garden occupies the whole area cleared. Burning is done just before the rainy season (October–November). The ash and soil are hoed into elongated mounds and grain is planted along the ridges. Gardens may be cultivated for more than five years. In the second and subsequent years of cultivation the stalks and weeds are piled up and burnt. There are signs of soil impoverishment. The gardens are cleared in August, and heaped to dry for burning. After the burning the seeds are planted in late November. By February and March green maize is available to supplement the diet, and by the end of April the crops are ready to be harvested. The maize is stored in wicker containers, while sorghum is stored in the huts on a stand. Cassava is planted in large mounds made by turning the turfs over, so that the roots are outside the mound and the vegetable matter inside. Legumes are planted in smaller gardens, or interplanted with the main crop. Ground-nuts are stored, after being shelled, in mud-plastered wicker containers, designed to be rat-proof. Tobacco is planted at the sides of the streams for hand-watering in the seedling stage, and then transplanted about January. The leaves are ready to be plucked about April and soon afterwards they are marketed. Sweet potatoes are planted in the rainy season, and are ready for eating in May. The stream gardens yield out-of-season crops—maize, beans, pumpkins, and also sugar-cane, which is used in the initiation ceremonies.

Craftsmanship

The Yao have few skills. All cultivation is by hoe; axes and knives are their only other technological equipment. The men make mats from reeds and palm leaf, and the women make pottery. The huts are strongly built from poles laced with bamboo and plastered with mud. The roof is thatched with grass. Under Arab influence the

[1] *Census of Native Population*, 1931, p. 26.
[2] Aplin, 1931, p. 19.
[3] Codrington, 1898, p. 517.
[4] Stannus, 4, 1922, p. 236; Macdonald, 1882, vol. i, p. 137.

2: Mitchell E-5 (1946-1949) 1956 FT7 Yao FT7

241

(*a*) Patchwork cultivation in Chiwalo area. Note how the natural vegetation has been cleared for staple gardens. Patches of ash from burnt garden refuse can be seen to the left. There are also two small villages in the foreground and a large village distinguishable by the dark patch of mango trees at the foot of the hill in the top left-hand corner.

(*October 1948*)

137

(*b*) A small village in typical surroundings in Chiwalo area.

(*August 1948*)

PLATE II [facing p. 12]

2: Mitchell E-5 (1946-1949) 1956 FT7 Yao FT7

APPENDIX A

ECONOMIC DATA

AMOUNT AND VALUE OF TOBACCO BOUGHT IN JALASI–KAWINGA AREAS 1942–49

249
433
435

Year	Growers	Amount in lbs.	Cash Value £	Av. Price per Grower (pence per lb.)	Lbs. per Grower	Cash per Grower £ s. d.
1941/2 .	1055	393,964	6695	4·08	373	6 6 9
1942/3 .	2106	465,477	7044	3·02	221	4 0 0
1943/4 .	1792	464,929	8025	4·15	259	4 8 5
1944/5 .	1246	269,212	3067	2·84	216	2 9 3
1945/6 .	1074	127,237	6471	12·41	119	6 0 6
1946/7 .	918	116,590	4020	8·28	127	4 7 5
1947/8 .	1570	132,832	5035	9·18	85	3 4 3
1948/9 .	1315	171,865	5206	9·60	130	4 0 0

AGRICULTURAL PRODUCE BOUGHT IN KAWINGA–JALASI AREAS AT NAMWERA, LIWONDE, MLOMBA, NTAJA, NYAMBI, AND MASUKU MARKETS. AVERAGE FOR THE YEARS 1945–47 INCLUSIVE

241
433
435

(in 1000 lb.)

Year	Maize	Groundnuts	Rice	Beans
1945	23·6	1395	94·0	31·0
1946	101·4	1268	60·4	34·6
1947	nil	1465	122·8	2·8
Total	125·0	4128	277·2	68·4
Average . . .	41·6	1376·1	92·4	22·8

LIVESTOCK CENSUS IN KAWINGA–JALASI AREAS, 1947
(Jalasi, Kawinga, Liwonde and Nyambi, and Malemia areas)

231

Goats	Sheep	Pigs	Cattle
4319	2498	4	225*

* Most of these are owned by White settlers.

3: Stanner D-5 (ca. 1912) 1922 FT7 Yao FT7

832 *Mpasi* is a love potion. Men are often anxious that women should ask them for love (*ku-pala*). A man seeing a woman whom he fancies, takes up some of the dust where she has trodden and mixing this with medicine puts it in his hair. If he meet her again, though he takes no notice of her, she will come to him.

789 When crops are harvested, a layer of the cereal is laid at the bottom of the corn-store, 241 and *uwke*, which consists of medicines contained in the skull of or made from the body of [826] a still-born infant, is then put in and the store filled. In this way, he who has only a small garden may be sure that his grain will last a long time. Similar medicine is put in gardens with the first rains to insure heavy crops. A man on the approach of the planting season should never give away seed to anyone until his own seed is put in or it may bring bad luck to his crop. This is evidently a superstition arising from the fact that if he gives seed away, he may not have enough left to raise a crop sufficient to support his family. Some people are considered "lucky at planting pumpkins, other people when they plant, reap only watery pumpkins." A man, therefore, will often ask one of the lucky people to plant his pumpkins for him. My hospital boy always got the cook to plant his pumpkins.

789 A man wishing to become a person of importance, with a village of his own, takes a 824 medicine made from a certain tree and then builds his hut in a new place, hoping people will flock to him. The tree is known as *chukambili*. Another medicine, taken in the belief that people will flock to a man in consequence, is made from the bush called *sitola*. Cf. *litule* planted at the threshold to attract visitors.

789 Conjuring. There are other performances akin to magic in the eyes of the natives, 791 which I have never had the opportunity of witnessing but which would appear to be of the nature of juggling or possibly hypnotism; some resemble the tricks of jugglers; others are more like some of the performances in India. I naturally supposed that they had been learned from men at the coast (Zanzibar), but I am assured that they belong to the Yao themselves.

Kambenje, a Yao of Chiradzulu, well-known at dances and *Unyago*, after some preliminary dancing, stands still and is covered by a cloth; when the cloth is again removed, he is discovered with a number of squealing puppies held in his loin cloth, which he then hands round. He begins to dance again and the persons to whom the puppies have been given watch him and then find they are holding excrement, not puppies. Or mud-fish are handed round and the people find they are holding women's diapers.

Another trick often performed by Kambenje was the burial of a man in the ground, covered up completely with earth; at the sounding of the drums the buried man comes running in from the back of the watching crowd.

Kasonga, a Yao of Malemya's, priest, and medicine man, after an *Unyago* ceremony used to put on his red blanket and walk over the hot embers of an enormous fire in the village open space. He admitted that he smeared himself with medicine and an eyewitness told me that when he put his feet on the hot logs, it caused a sizzling sound.

3: Stannus D-5 (ca. 1912) 1922 FT7 Yao FT7

516 731 769

knees and elbows, at intervals swaying their bodies from side to side and clapping their hands. Kasonga then ordered all to go and bathe, men and women separately. As they returned from the stream, rain began to fall.

Intercession on behalf of the sick may be made, especially by anyone who is likely to be accused of causing the illness by witchcraft.[1] The man standing with arms outstretched, downwards and a little in front of his body, the hands supine, takes some water in his mouth and discharges it in a stream on the ground, (probably as a sign of purification of his tongue), and then invoking "all the spirits above," asks that they will intercede to restore health to the sick man and bear witness to his own innocence of any wish to do the sick man injury. *Ku-pepa* is the word meaning to offer sacrifice and prayer. 755 769

Harvesting and hunting are occasions when sacrifices may be offered. It was formerly the custom for the chief to determine the day on which harvesting of millet should begin. On the day appointed, a big drum was beaten in the village and word passed round; then everyone would go down to his garden, gather a head of millet, and bring it back to the village where it was all handed over to the chief's headwife. After drying and threshing, a little of the grain was laid at the grave of an old chief by one of the reigning chief's advisers, the remainder being again distributed to all the people gathered together in the village meeting-place, who ate it raw. After this ceremony, harvesting began. 769 241 782

In passing through a millet garden, if a child asks his mother to give him some to eat, she plucks a bunch or two and reverently laying one at the foot of a *maoro* tree for the spirits or at the base of some other tree, if she cannot see a *maoro*, she gives the rest to the child.

When a hunting expedition makes its first killing, part of the flesh of the animal is laid at the base of a tree as a thank offering to the spirits and in anticipation of further favors to be conferred. All such offerings are supposed by the natives to be partaken of by the spirits, though they are well aware that they do not actually diminish in quantity. There is an interesting point in this connection: any man who has acted as *sbilo* (undertaker) to some well-known man may appropriate these offerings. In the case of the hunting offering, he will run round the tree, saying, "I am a hyaena, the spirits will not mind me," and will then take part of the flesh-offering and eat it. 782 224

In the same way, a *sbilo* may drink from a grave beer-pot after three days, when the spirits are supposed to have taken what they want.

With the exception of the *maoro* tree above mentioned (*ndima*, Chin.), and possibly another called *nsilo-ngoma* (Chin.), which is never used as firewood and which is supposed to be used by *mawi*, I do not think there are any sacred trees properly so-called. Miss Werner supposes that many of the big trees (often a species of *Ficus*) in villages are sacred.[2] The truth is, I believe, simply that a village is made naturally round a big tree which conveniently offers its shade for the village meeting place. The spirits of deceased chiefs may 824 778

[1] Vide supra, p. 287.

[2] The natives of British Central Africa, op. cit., p. 62.

3:Stanmus D-5 (ca. 1912) 1922 FT7 Yao FT7

never leave any food outside at night, not even the chaff from the grain she has been pounding, lest these most miserable of beings be attracted by it.

Chitowe is a word common to several tribes and among them appears to have various shades of meaning. Among the Wayao, the *itowe* are "the little people" of the leprechaun order. They rob the gardens and cause rot among the pumpkins; their little footprints can be seen where they have passed hither and thither; fruits and vegetables that they touch will become bitter. To prevent these disasters, the Yao, at the time when their crops are ripening, place different kinds of vegetables at cross-roads, hoping thereby to satisfy the *itowe* and prevent them coming into the gardens. As far as I am aware, the *itowe* have nothing to do with famine and are in no way connected with *Mtanga*, to be mentioned below, as Macdonald believed.[1] The *chitowe* is variously said to be "like a man but rather like an animal." He has two legs but goes on all fours.

The Yao describe another legendary race of "little people" who used to live in this country and who may still be met with, — "who knows?" They were of a very small stature, grew long beards, were very touchy, quarrelsome, and fierce, and carried spears. When anybody met one, he was immediately asked: "*Mumbonele kwapi?*", "From how far did you see me?" and it was always well to pretend to have seen the little man coming a long way off and make him believe he was considered quite a big person; if you said "Hullo, I've only just spotted you!", he would immediately spear you. They are commonly supposed to dwell on the tops of high mountains and are iron workers. They are called the *Mumbonele kwapi*.

There is no relation as far as I know between these two classes of "little people," but I think these stories go to uphold the theory recently reiterated by Hastings Guilford in his Hunterian Lecture (1914) that folk-lore fables of hobgoblins, etc., have a basis in fact. He believes that dwarf races at one time were to be found, possibly over a very wide area of the globe. In this country, I think it may be that one sees the transition from historical facts to true fairy stories.

The Anyanja have the same legend about these "little people," the *mwandi omwaluti* ("where-did-you-see-me"); it is indeed not only wide-spread throughout this country, (the Ahenga and Ankonde in North Nyasa district speak of the *mwandionwandu* who ask the same question), but there is a very similar legend among the Akikuyu in British East Africa.[2]

The *chitowe* is doubtless the *chiruwi* of the Anyanja, mentioned in Scott's dictionary,[3] as Miss Werner[4] has supposed, for one finds that among the Anyanja at the southern end of the Protectorate, the *chitowe* is described as having only one side to his body so that he is invisible when viewed from the off side, thus resembling the *chiruwe* who has one half of his body made of wax.

[1] Op. cit., vol. I, p. 71.
[2] M. W. H. Beech, 'Pre-Bantu companies of East Africa,' (Man, London, 1915, p. 40-41).
[3] Op. cit., p. 97.
[4] British Central Africa, op. cit., p. 89.

533
539

3

1st voice. *Atindili mbatata nganga yalele eja wakalabwe,*
potatoes guinea fowl eeh! thank you you,
2d voice. *Atindili mbatata akundanda atiyana'wo mwanja.*
potatoes they are calling me Atiyana there is going away home;
Chorus. *Kwanda, akakulile!*
Remove the hoe from its handle!

The name of any person may be introduced into these songs, sometimes the name of a member of the village or of some person well known in the district. To introduce a name thus is *ku-lumba*. *Eja!* is an exclamation of thanks; when receiving anything, both hands are held out, and the words *eja, eja, eja!* or *nanga, nanga!* are uttered.

4

1st voice. *Makolowele 'galile sombe apalapala nganapanda nguamba.*
The millet have eaten locusts you place did not plant not.
2d voice. *'Galile sombe apalapala nganapanda mpunga, atati, nguamba!*
Have eaten locust you place did not plant rice, father, not!
2d voice. *Apalapala nganapanda mpunga, atati, nguamba!*
1st voice. *Apalapala nganapanda mpunga, atati, nguamba!*
Chorus. *Makolowele, galile sombe!*

Makolowele: after the first crop of millet has been taken in, the stalks are cut off near the ground and the roots allowed to remain in the soil. Next season, they again sprout and yield a second crop. This second year growth is *makolowele*. [241]

5

1st voice. *Mazimba m'chinguamba chilo chilo chilao chilo chilo!*
Lions in the palm-trees at night, etc.
2d voice. *Mazimba m'chinguamba, kwimba likwata Atiyana! Tinjiwa chilo chilo etc.*
Lions in the palm-trees to sing *likwata Atiyana!* I shall die tonight, tonight, etc.
Chorus. *Mazimba m'chinguamba!*

Likwata is the name of a dance, *Atiyana* is a woman's name. Cf. "Let us eat, drink, and be merry, for tomorrow we die."

6

1st voice. *Ndandes, ndande, ndandes!* Repeat.
Teasing, teasing, teasing!
2d voice. *Nakolaga chilanda tanda, nandanda'na, nguanda!*
If you have teasing teasing, me tease me, I am going away!
Chorus. *Ndandes!*

4: Stannus D-5 (ca. 1909) 1910 FT7 Yao FT7
Marovi FR4

Gaga, the residue after pounding maize, is eaten by the women. No oils are used in cooking, but of fat and suet any native is very fond. Meat may be dried and smoked if in large quantity: flesh, fish and fowl is commonly roasted on spits; small pieces of chicken may be made into a kind of stew with beans and eaten as the relish. When on a journey the fire is commonly made against a tree. The cooking vessels are cleaned before use, not after. The fried fish eaten is often partly decomposed, and meat which is very high, even with maggots, is cooked and eaten, maggots and all. M Y 262 [252] [251] [184] [264]

Taboo.—Bushbuck is not eaten by many natives, as they say it feeds near graveyards. Fowls are not eaten by some, as this diet causes them to vomit; a snake-catcher never eats vegetables, and at the same time puts medicine on his hands. Many abstain from the flesh of certain animals as certain skin diseases are said to be caused thereby; all such diseases bear the name *wokuscenga*. M Y [753]

A man who loses a relation by drowning takes an oath that he will never again eat fish, and never drink water from such lake, river, etc. Here the idea is of course simply to avoid eating part of the relation.

A Nyasa and Machinga will not eat the flesh of the hippopotamus, because on the body they say there are the marks of a string round the loins and of a mat on his back, adding that long ago he was a man. Animals of prey would never under any circumstances be eaten. Milk used never to be drunk by an adult, as it was said to cause a man to become as a child. A man would not dare to drink woman's milk as it was said he would surely die of dysentery. M [825] M [272]

Tobacco, etc.—The smoking of tobacco was a custom introduced from the coast. Chewing was general among Machinga and Yao men and women, while the Angoni and Mañanja snuffed. With the tobacco a little lime, made by burning shells, was taken in the mouth. Giddiness and sleepy sensations were experienced after chewing. The Nyasa and Awisa smoke a hubble-bubble, the water vessel being a large sausage-shaped gourd with a reed stem supporting a large bowl of *mbabwa* wood, sometimes very nicely carved (Plate XXVII, Figs. 5 and 7). The Amyanja smokes a pipe with the bowl made of clay and the stem of bamboo (Plate XXVII, Fig. 6); these are made by the women. Tobacco is grown in nearly every village, a large-leaved rather coarse variety; it is sun-dried and rolled up into hollow rings 6 inches in diameter and 3 inches broad. For snuff (*Podia womuna*) the sun-dried tobacco is further dried over a fire on a pan, when cold it is ground on a stone with a smaller stone by the women, and with it is mixed some ashes of the *ngoza* fig-tree. M Y 276 [177]

At Blantyre I obtained a water-pipe made of bamboo stem; this was the water reservoir; a stem of reed supports a little clay bowl. The mouth is placed over the upper end of the bamboo. Bhang (*cannabis indica*) is smoked in a pipe of this kind.

AGRICULTURE.

The people live by cultivating the soil. Both sexes help in hoeing and planting, the collecting of the crops being mostly done by women. The hoe is the M Y 241

4: Stannus D-5 (ca. 1909)1910 FT7 Yao FT7
Marayi FR4
Ngoni FR5

M Y 241 M Y [423] N [422] only implement used. Sowing is done after the first rains, about November; the harvest takes place in May to July. Gardens are at varying distances from the villages, depending partly on the soil becoming exhausted after years of cultivation. Boundaries are marked by leaving a line of uncultivated ground, sowing a line of a different crop, tying knots in the young crops at intervals, ditches, etc. In starting a new garden, woodland is often taken; the trees are cut down, leaving stumps 3 feet high; the undergrowth is cleared away and burnt, the ashes distributed over the land, which is then hoed, really very superficially; the earth is then made up into little heaps with a central hole in each, after the first rains four or five grains of the cereal (maize, millet) are dropped in each and covered with earth; as the young shoots grow the hole is more and more filled in.

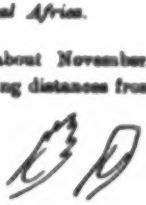

FIG. 8.

With the cereal is planted the seed of peas, beans, pumpkins, the former on coming up then grow up the maize stalks. The seed is last year's product and not specially selected.

M Y [343] [417] M Y [251] Depredations among crops made by elephant, hippopotamus, large antelope (eland and kudu), pigs and baboons, vary in extent in different districts. Little grass huts are built, raised above the ground like a pile-dwelling, in which watchers are stationed. Fences, sometimes extending for miles, are built. The gardens of the chief are hoed by his slaves or the people of the village. Maize is collected in the cob, and after the outer coverings have been removed is stored; so is the *nkolwe*, millet in the head; beans and peas are stored in baskets. Medicine is put on the ground to ensure a good crop, and a piece of stick is sometimes hung up for good luck.

CATTLE, ETC.

N 231 [422] The keeping of cattle is practically restricted to certain tribes living in districts free from tsetse-fly (Angoni, Wankonde); among these people wealth is reckoned by cattle. The milk is little used; the flesh is eaten only when an animal dies. Marks of ownership are made by cutting the ears (Fig. 8). Cattle are kept in open kraals by Angoni, in a compartment of their houses by Wankonde; they are tended by the small boys as a rule. Goats and sheep are kept all over the country. Castration of cattle is a recognised practice (*kufula*).

N 281 Angoni make their shields from cattle skins; their spear handles are covered with goat hair (beard); hair anklets and armlets in dancing costume are made from goat hair. Skins are used as dress to a small extent.

HUNTING.

M 224 A man intimates to the community around that he is making a hunt by clothing a boy of about ten years in leaves, who precedes him and the men from his own village through adjacent villages; at each village the lad has to lie down and

3: Stanner D-5 (ca. 1912) 1922 FT7 Yao FT7

276 made by boiling down the solution obtained by straining a decoction of water and the ashes of banana leaves; it contains, of course, some of the inorganic salts from the banana leaves. Without this addition, snuff is said to lack its proper aroma. The Angoni do not warm their snuff, but add a magnesi made in a similar way from cow dung.

262 146 Food stuffs. According to the general supposition, the native lives on a very monotonous diet, with a great excess of carbohydrates to the exclusion of proteids and fats. While it is certainly true that he does not consider that he has been fed without his "whank" of flour (maize, millet, rice or cassava), still he feels that his meal is a poor one if it does not also include some secondary dish, such as beans, fish, or green vegetables cooked like spinach.

● 243 262 The grains chiefly grown and used by the Yao are maize, millet, and a certain amount of rice.

Millets (sorghum): *Mapembe*, a tall variety, eight feet high, which is harvested late; *Mapembe pa mnunji*, a hairy variety; *Liambalaba*, a short kind, five feet high, which matures early; *Mbulwe*, characterized by the fact that the ripe grains will fall when the plant is shaken, and by a rather bitter taste; *Nandanji*, a variety six feet high which ripens quickly; *Kapile*, a shorter variety with a bitter taste but, according to the natives, a pleasant smell. (It makes good beer.)

Eleusine: *Liwanje*, about four feet high with very small grains; *Chindumbo*, used for making a very strong beer; *Mvundi*, a variety eight feet high. Cyprus grasses: *Usanje;* [273] there are two varieties, *Kaumbata*, which curls up and is used for making strong beer, and another kind which is not curly.

Maize: A number of varieties of the species *Zea mays* are grown by the Yao: *Chiaowa*, a black-grained variety; *Nampalala*, red maize; *Liwanje*, the seeds of which are large, white, and dented; *Nanchinga*, with grains flattened on the free surface; *Kanjelanjala*, a dwarf maize about four feet high.

Rice (*Oryza sativa*): *Mpunga* (generic name *Likoti*), a large-grained variety; *Singuna*, with very long grains; *Linguindimba*, red rice; *Mbangala*, characterized by the strong, not unpleasant odor it gives out when being cooked.

244 262 Cassava: *Chinangwa* is grown everywhere, but the Yao do not prepare flour from it, preferring to eat it raw at odd times. There are several varieties; *Chinangwa cha chiwowa*, white cassava; *Chinangwa cha mbawi*, a brown variety; *Liwanga*, a bitter species (*Manihot utilissima*) which produces a very large root; *Chilwi* and *Kam"anya*, varieties of *Manihot aipi*, the former characterized by its long, tapering leaves, while the latter is a dwarf variety with a big root.

Beans: there are a number of species of beans grown: *Mbarwanda* (*Cajanus indicus*), *ngunda* (*Vigna catiang*), *mbawa* (*Phaseolus mungo*), *mbwanda*, (*Phaseolus sp.*), *nambahodo*, (*Phaseolus sp.*), *ngundamalisi*, and a ground bean *njama* (*Voandzia subterranea*).

276 made by boiling down the solution obtained by straining a decoction of water and the ashes of banana leaves; it contains, of course, some of the inorganic salts from the banana leaves. Without this addition, snuff is said to lack its proper aroma. The Angoni do not warm their snuff, but add a *mapuli* made in a similar way from cow dung.

262 146 Food stuffs. According to the general supposition, the native lives on a very monotonous diet, with a great excess of carbohydrates to the exclusion of proteids and fats. While it is certainly true that he does not consider that he has been fed without his "whack" of flour (maize, millet, rice or cassava), still he feels that his meal is a poor one if it does not also include some secondary dish, such as beans, fish, or green vegetables cooked like spinach.

263 262 The grains chiefly grown and used by the Yao are maize, millet, and a certain amount of rice.

Millets (sorghum): *Mapembe*, a tall variety, eight feet high, which is harvested late; *Mapembe pa mnunji*, a hairy variety; *Lisambalaba*, a short kind, five feet high, which matures early; *Mbabao*, characterized by the fact that the ripe grains will fall when the plant is shaken, and by a rather bitter taste; *Nundunji*, a variety six feet high which ripens quickly; *Kapila*, a shorter variety with a bitter taste but, according to the natives, a pleasant smell. (It makes good beer.)

Eleusine: *Lisunje*, about four feet high with very small grains; *Chindumbo*, used for making a very strong beer; *Mundi*, a variety eight feet high. Cyprus grasses: *Usunje*; there are two varieties, *Kumbata*, which curls up and is used for making strong beer, and another kind which is not curly. 273

Maizes: A number of varieties of the species *Zea mays* are grown by the Yao: *Chiowa*, a black-grained variety; *Nungulala*, red maize; *Lisunje*, the seeds of which are large, white, and dented; *Nanchinga*, with grains flattened on the free surface; *Kanjalanjala*, a dwarf maize about four feet high.

Rice (*Oryza sativa*): *Mpunga* (generic name *Lihati*), a large-grained variety; *Singuno*, with very long grains; *Linguindimba*, red rice; *Mbungulu*, characterized by the strong, not unpleasant odor it gives out when being cooked.

291 262 Cassava: *Chinangwa* is grown everywhere, but the Yao do not prepare flour from it, preferring to eat it raw at odd times. There are several varieties; *Chinangwa cha chiwowa*, white cassava; *Chinangwa cha mbawani*, a brown variety; *Lisunga*, a bitter species (*Manihot utilissima*) which produces a very large root; *Chilasi* and *Kaw"anga*, varieties of *Manihot aipi*, the former characterized by its long, tapering leaves, while the latter is a dwarf variety with a big root.

Beans: there are a number of species of beans grown: *Mbarawanda* (*Cajanus indicus*), *ngunda* (*Vigna catiang*), *mbawo* (*Phaseolus mungo*), *mbaunda*, (*Phaseolus* sp.), *nkambakada*, (*Phaseolus* sp.), *ngandamalui*, and a ground bean *njuma* (*Voandzeia subterranea*).

3:Stannus D-5 (ca. 1912) 1922 FT7 Yao FT7

Peas, *ensuwe* (*Pisum sativum*), are grown in abundance. There are two other varieties; *ensuwe* (groundnuts), and *chindwaiwa*. 244 262

Sweet potatoes: *ubutate* (*Ipomoea batas*), of which the natives are very fond; they distinguish a red and a white variety, *ubutate ngunjejeu* and *ubutate ngwiimwa*.

The tuber-like root of a bush called *ngumbu* is also eaten, likewise the young underground shoots of a palm tree. The leaves of the sweet potato and the leaves of many wild growing plants are collected by the women and cooked like spinach; the flowers of pumpkins are used in a similar way. Of fruits eaten, the banana, *lipombo*, takes first place. A very large number of species of *Rumnus* are grown, including *mukumbuku*, *mbinga*, *mbali*, *mwiri* (*mapuqa*, *kabuta* a dwarf banana, *kaipuu* a wild banana, and *mlanga*, the plantain. The paw-paw is found all over the district. There are several varieties of pumpkin, *lipungu*, including *mbondu*, *chindondoli*, and a very large species called *ntaw ua ngwena*, "the crocodile's head." Varieties of cucumbers include *liapuka* and *kahitungulu*. 262 222

A large number of wild fruits are eaten, among them figs, *lubuje* (*Ficus*), *kaubu* (*Uapaca*), *chiili* and *liungu*, the fruits of two species of *Landolphia*, *mainga* or Kaffir oranges (a species of *Strychnos*), *chilundu*, the fruits of *Hyphaene* (palms), *mukwakwa* (*Myrianthus*) a wild tree belonging to the mulberry family, and others, *ndowa*, *malangamdembu*, *ndondombo*, *chingulungulu*, *chindupulpu*, *mulumbu*, *likwendu*, etc. The seeds from the heads of bulrushes (*Typha*) are mashed up and eaten.

All fish are eaten except the *ngunga*, which always causes urticaria. 262

The flesh of all the antelopes, of oxen, sheep and goats is eaten greedily; only bushbuck is avoided by some people as it is said to cause a skin eruption. Elephant is shunned by many on account of its rough skin, also rhinoceros because of the ulcers which it often has on its body, and hippopotamus on account of the marks on its back which are thought to be akin to leprosy. People eating the flesh of these animals are supposed often to sicken with leprosy, the pachydermatous skin, the ulceration or anaesthetic depigmented patches of that disease being reproduced, as the case may be. Few will eat pig or warthog on account of the digging habits of these animals. It is thought they may sometimes grub up bodies from graves. These flesh taboos may be due to Mohammedan influence. The lion, hyaena, and fox no one would touch, as they are supposed to be connected with witch,[1] but the heart of the lion might be eaten to acquire courage. Few will touch leopard flesh, but Kawinga's descendants do so. All will eat of the flesh of the serval cat but very few of the common wild cat. The rock rabbit, *ngungunire* (*mbira*, Chin.), is refused by most Yao as it is a "beast without shame," having no tail to hide what should in decency be hid. Very few will partake of the baboon, but monkey is acceptable to many. A few reject porcupine, supposing they will break out in spots, while the zebra may cause stripes, and none will touch the skunk. No one eats *ewoje*, a mouse that is believed to die if it crosses a path. All kinds of rats are eaten, but the show-rat and cane-rat only by boys. Snakes 262 753 [77] 834

[1] Vide supra, p. 324.

1: Tew E-4 (no date) 1950 FT7 Yao FT7

completely exhausted or reduced to a mere trickle. The average annual rainfall over the last ten years is 29·75 in. The shore waters of Lake Pamalombe are well stocked with fish. Both districts are well wooded, with a large variety of timber trees. In the dry sandy soil where the population is unable to live for lack of water, the prevalent type is *tsanya*. A line of foothills from Zomba to Chikala are conserved as Forest Reserves.[1]

MAIN FEATURES OF ECONOMY[2]

The Yao are chiefly agriculturists, and in the old days were also hunters. As they live largely in tsetse-infested areas, they do not keep cattle, except for a few herds near Fort Johnston and Zomba, in Nyasaland, and on the east of Lake Nyasa,[3] in the mountains of the Ruvuma valley around Mataka's.[4]

Abdullah describes a time when the Yao were economically self-sufficient, making their own bark-cloth, weaving, burning herbs for salt, and working iron for the tools they needed. Nevertheless, the tradition of coastward journeys for trading with the Arabs was well developed before the Europeans came to the country. They used to trade cattle and salt from the Mangonja and Lomwe for tobacco and hoes, and in exchange for slaves they got from the Arabs gunpowder, guns, swords, beads, coloured cloths, earthenware, and foodstuffs.[5] Slaving expeditions were among the most important activities of the chiefs.[6] The old tradition of the absence of the men from the village owing to these expeditions, is continued in modern times by soldiers and labour migrants to Southern Rhodesia and the Union. These men send back remittances to the area, but the main population is supported by agriculture. Cash is needed for purchasing salt and cloth, for paying certain dues and fines formerly paid in kind—adultery compensation, diviner's and initiation fees—as well as for tax and rent. Consequently, while certain crops, such as tobacco and ground-nuts, are grown for cash, any food crop is liable to be sold in one form or another in local markets or by the roadside.

The food crops are maize, sorghum, finger millet, sweet potatoes, ground-nuts, legumes. Fish is an important article of diet. Eggs are believed to cause sterility and are only eaten by those outside the child-propagating age; milk is disliked and never consumed.[7] *Termite alates* (flying ants) are a much relished food when they come out on nuptial flights. Rice is considered a superior food, and is eaten when possible on ritual occasions.[8]

Tobacco is the main cash crop, with individual production under the supervision of the Agricultural Department. The average cash earned per grower in 1943–4 was £5. 3s. This is overwhelmingly an external trade. Ground-nuts, which are sold at government-controlled markets to licensed buyers, bring in only a few shillings a year to the average seller. Women obtain cash by selling beer. At the lake shore the fishing industry is very important. Natives owning big nets are said to make between £20

[1] Meeuwse, 1950, pp. 147–61.

[2] Unless otherwise stated, the information is from J. C. Mitchell, and relates to the Yao of south Nyasaland.

[3] Livingstone, 1874, pp. 72 and 80.

[4] See Livingstone, 1874, p. 68; Young, E., 1877, p. 139; Thompson, 1882, p. 78; Sohnee, 1895, p. 502; Maughan, c. 1900, pp. 86–7; Lewis, 1924, pp. 20–3.

[5] Swanson, c. 1900, p. 30.

[6] Young, E., 1877, p. 100.

[7] Abdullah, 1919, pp. 10–11, 26–30.

[8] Barber, 1954, p. 14.

APPENDIX A

ECONOMIC DATA

AMOUNT AND VALUE OF TOBACCO BOUGHT IN JALASI-KAWINGA AREAS 1942-49

249
433
435

Year	Growers	Amount in lbs.	Cash Value £	Av. Price per Grower (pence per lb.)	Lbs. per Grower	Cash per Grower £ s. d.
1941/2 .	1055	393,964	6695	4·08	373	6 6 9
1942/3 .	2106	465,477	7044	3·02	221	4 0 0
1943/4 .	1792	464,929	8025	4·15	259	4 8 5
1944/5 .	1246	269,212	3067	2·84	216	2 9 3
1945/6 .	1074	127,237	6471	12·41	119	6 0 6
1946/7 .	918	116,590	4020	8·28	127	4 7 5
1947/8 .	1570	132,832	5035	9·18	85	3 4 3
1948/9 .	1315	171,865	5206	9·60	130	4 0 0

AGRICULTURAL PRODUCE BOUGHT IN KAWINGA-JALASI AREAS AT NAMWERA, LIWONDE, MLOMBA, NYAJA, NYAMBI, AND MASUKU MARKETS. AVERAGE FOR THE YEARS 1945-47 INCLUSIVE

241
433
435

(in 1000 lb.)

Year	Maize	Groundnuts	Rice	Beans
1945	23·6	1395	94·0	31·0
1946	101·4	1268	60·4	34·6
1947	nil	1465	122·8	2·8
Total	125·0	4128	277·2	68·4
Average . . .	41·6	1376·1	92·4	22·8

LIVESTOCK CENSUS IN KAWINGA-JALASI AREAS, 1947
(Jalasi, Kawinga, Liwonde and Nyambi, and Malemia areas)

231

Goats	Sheep	Pigs	Cattle
4319	2498	4	225*

* Most of these are owned by White settlers.

1: Tew E-4 (no date) 1950 FT7 Yao FT7

and £30 per annum. It is profitable to carry fresh fish inland by bicycle even as far as Blantyre,[1] as the shore price to the retailer is 4s. a load, which later may fetch from 16s. to 24s.[2] Yao on the south-west lake shore grow an excellent quality rice.[3] Rice is also grown near Lake Chilwa, but is mainly sold in the market organized near the lake shore by the Agricultural Department.

Division of Labour

The man builds the house, hunts, fishes, makes the nets, baskets, grain-store, game-traps, and, in the old days, the bark-cloth. He cultivates the tobacco. He cuts down the trees and may help with the hoeing and harvesting. The woman hoes, muds the floor of the hut, sweeps, cooks, brings firewood, draws water, brews beer, makes the pots and pipes.[4]

Land Usage

There are two types of garden in the Yao areas south of Lake Nyasa: one the ordinary garden in which the staples grow, and second, gardens along the stream beds. These latter are especially valuable for providing out-of-season crops. In addition most householders have a few small plots for tobacco and ground-nuts.

The main garden is cultivated by the slash-and-burn method, common in Central Africa. The Yao, unlike the Bemba, garden occupies the whole area cleared. Burning is done just before the rainy season (October–November). The ash and soil are hoed into elongated mounds and grain is planted along the ridges. Gardens may be cultivated for more than five years. In the second and subsequent years of cultivation the stalks and weeds are piled up and burnt. There are signs of soil impoverishment. The gardens are cleared in August, and heaped to dry for burning. After the burning the seeds are planted in late November. By February and March green maize is available to supplement the diet, and by the end of April the crops are ready to be harvested. The maize is stored in wicker containers, while sorghum is stored in the huts on a stand. Cassava is planted in large mounds made by turning the turfs over, so that the roots are outside the mound and the vegetable matter inside. Legumes are planted in smaller gardens, or interplanted with the main crop. Ground-nuts are stored, after being shelled, in mud-plastered wicker containers, designed to be rat-proof. Tobacco is planted at the sides of the streams for hand-watering in the seedling stage, and then transplanted about January. The leaves are ready to be plucked about April and soon afterwards they are marketed. Sweet potatoes are planted in the rainy season, and are ready for eating in May. The stream gardens yield out-of-season crops—maize, beans, pumpkins, and also sugar-cane, which is used in the initiation ceremonies.

Craftsmanship

The Yao have few skills. All cultivation is by hoe; axes and knives are their only other technological equipment. The men make mats from reeds and palm leaf, and the women make pottery. The huts are strongly built from poles laced with bamboo and plastered with mud. The roof is thatched with grass. Under Arab influence the

[1] *Census of Native Population*, 1931, p. 16.
[2] Codrington, 1898, p. 317.
[3] Swanson, c. 1902, p. 236; Macdonald, 1882, vol. i, p. 137.
[4] Aylin, 1931, p. 19.

539 "*Lokoto lokoto kondo ko*"
"Picking up picking up a little basket full"

to which the listeners exclaim

"*Lokotoni*"
"Overfloweni"

At the completion of each sentence in the story, one of his listeners will exclaim, "Go!" When he has finished his story, he says,

"*Ajikoko kotoko kotokowanga yamiwe yakowere, unko ekipungi*!"
"Take off the fire, the little mouse lost it in stupid, by the hood it is very hard, the hair (is) in a hump!"

During the intervals of a long story, one of the listeners may break in and sing some little song, such as the song of the *nkondo* in the story of the greedy man, thus giving the story-teller a rest.

The house and household utensils. The Yao house does not differ greatly from the
342 Nyanja habitation which I have already described elsewhere.[1] The accompanying figure (Pl. XIV, fig. 12) gives the circular plan of a hut with a veranda partly open and partly enclosed to form a room. The central pole of the hut is indicated, the hearth (H), the position of the sleeping mats (M), and the place where the water pots are kept (P). The
352 bed may be a bamboo platform supported by forked sticks a foot above the ground (*mpumuli*), or a dais of mud, over which is spread the sleeping-mat, *upuse*. (Pl. XIV, fig. 14.) Seats, *ekilengo*, are made of logs of wood with conveniently placed branches acting as legs. I have seen a symmetrically carved log with shaped legs all in one piece, which suggested by its form and by the presence of a button on the midline of the under surface that it was made in the imitation of an animal. Plank seats with peg legs are now sometimes seen. Wooden pegs are driven into the wall and serve to hang odd articles upon.

[359] The hearth is simply a shallow depression in the mud floor, around which are placed three large stones to support the cooking pots. Sometimes a canopy is built over the hearth, consisting of four upright poles supporting a platform made of reeds and grass, upon which millet and other seed grains are often stored. From this platform *kipulo* (*ionyje*,
[251] Chin.), the gourd containing the supply of salt is often hung. The seed grain tied up in little bundles is suspended from the *kipulo* where it becomes very dry and smoked, without any ill effect to the next year's crop. (Pl. XIV, fig. 16.) Four pronged branches of trees are often stuck in the ground with a string tied around the prongs, and used as holders for gourds, salt bottles, etc.; this device is called *kipunda* (*phunda*, Chin.). (Pl. XIV, fig. 10.)
415 The smaller utensils include the porridge stirring stick *mtiko* (Yao and Chin.) (Pl. XIV, fig. 12), several wooden spoons *ukiwosi* (*ukipunda* or *namulowa*, Chin.), (Pl. XIV, figs. 11, 13), a number of gourds of various shapes and sizes used as ladles and drinking vessels,

[1] 'Notes on some tribes of British Central Africa,' op. cit., p. 320-322.

4: Stannus D-5 (ca. 1909) 1910 FT7 Yao FT7
Marovi FR4

Gaga, the residue after pounding maize, is eaten by the women. No oils are used in cooking, but of fat and suet any native is very fond. Meat may be dried and smoked if in large quantity: flesh, fish and fowl is commonly roasted on spits; small pieces of chicken may be made into a kind of stew with beans and eaten as the relish. When on a journey the fire is commonly made against a tree. The cooking vessels are cleaned before use, not after. The fried fish eaten is often partly decomposed, and meat which is very high, even with maggots, is cooked and eaten, maggots and all.

Taboo.—Bushbuck is not eaten by many natives, as they say it feeds near graveyards. Fowls are not eaten by some, as this diet causes them to vomit; a snake-catcher never eats vegetables, and at the same time puts medicine on his hands. Many abstain from the flesh of certain animals as certain skin diseases are said to be caused thereby; all such diseases bear the name *wolwawaga*.

A man who loses a relation by drowning takes an oath that he will never again eat fish, and never drink water from such lake, river, etc. Here the idea is of course simply to avoid eating part of the relation.

A Nyanja and Machinga will not eat the flesh of the hippopotamus, because on the body they say there are the marks of a string round the loins and of a mat on his back, adding that long ago he was a man. Animals of prey would never under any circumstances be eaten. Milk used never to be drunk by an adult, as it was said to cause a man to become as a child. A man would not dare to drink woman's milk as it was said he would surely die of dysentery.

Tobacco, etc.—The smoking of tobacco was a custom introduced from the coast. Chewing was general among Machinga and Yao men and women, while the Angoni and Mananja snuffed. With the tobacco a little lime, made by burning shells, was taken in the mouth. Giddiness and sleepy sensations were experienced after chewing. The Nyasa and Awisa smoke a hubble-bubble, the water vessel being a large sausage-shaped gourd with a reed stem supporting a large bowl of mahogany wood, sometimes very nicely carved (Plate XXVII, Figs. 5 and 7). The Amyanja smokes a pipe with the bowl made of clay and the stem of bamboo (Plate XXVII, Fig. 6); these are made by the women. Tobacco is grown in nearly every village, a large-leaved rather coarse variety; it is sun-dried and rolled up into hollow rings 6 inches in diameter and 3 inches broad. For snuff (*Fodia womanae*) the sun-dried tobacco is further dried over a fire on a pan, when cold it is ground on a stone with a smaller stone by the women, and with it is mixed some ashes of the *upoo* fig-tree.

At Blantyre I obtained a water-pipe made of bamboo stem; this was the water reservoir; a stem of reed supports a little clay bowl. The mouth is placed over the upper end of the bamboo. Bhang (*cannabis indica*) is smoked in a pipe of this kind.

AGRICULTURE.

The people live by cultivating the soil. Both sexes help in hoing and planting, the collecting of the crops being mostly done by women. The hoe is the

4: Stannus D-5 (ca. 1909)1910 FT7 Yao FT7
Marayi FR4
NGONI FR5

M Y 241 only implement used. Sowing is done after the first rains, about November; the harvest takes place in May to July. Gardens are at varying distances from the villages, depending partly on the soil becoming exhausted M Y [923] after years of cultivation. Boundaries are marked by leaving a line of uncultivated ground, sowing a line of a different crop, N [922] tying knots in the young crops at intervals, ditches, etc. In starting a new garden, woodland is often taken; the trees are cut down, leaving stumps 3 feet high; the undergrowth is cleared away and burnt, the ashes distributed over the land, which is then hoed, really very superficially; the earth is then made up into little heaps with a central hole in each, after the first rains four or five grains of the cereal (maize, millet) are dropped in each and covered with earth; as the young shoots grow the hole is more and more filled in.

FIG. 8.

With the cereal is planted the seed of peas, beans, pumpkins, the former on coming up then grow up the maize stalks. The seed is last year's product and not specially selected.

M Y [343] Depredations among crops made by elephant, hippopotamus, large antelope (eland and kudu), pigs and baboons, vary in extent in different districts. Little [417] grass huts are built, raised above the ground like a pile-dwelling, in which watchers are stationed. Fences, sometimes extending for miles, are built. The gardens of the chief are hoed by his slaves or the people of the village. Maize is collected M [251] in the cob, and after the outer coverings have been removed is stored; so is the [illegible], millet in the head; beans and peas are stored in baskets. Medicine is put on the ground to ensure a good crop, and a piece of stick is sometimes hung up for good luck.

CATTLE, ETC.

N 231 The keeping of cattle is practically restricted to certain tribes living in districts free from tsetse-fly (Angoni, Wankonde); among these people wealth is [922] reckoned by cattle. The milk is little used; the flesh is eaten only when an animal dies. Marks of ownership are made by cutting the ears (Fig. 8). Cattle are kept in open kraals by Angoni, in a compartment of their houses by Wankonde; they are tended by the small boys as a rule. Goats and sheep are kept all over the country. Castration of cattle is a recognised practice (*bufula*).

N 281 Angoni make their shields from cattle skins; their spear handles are covered with goat hair (beard); hair anklets and armlets in dancing costume are made from goat hair. Skins are used as dress to a small extent.

HUNTING.

M 224 A man intimates to the community around that he is making a hunt by clothing a boy of about ten years in leaves, who precedes him and the men from his own village through adjacent villages; at each village the lad has to lie down and

against all evils — witchcraft, attack by lions, etc. The *akamusi* then set about building 881
shelters in which the *wali* will remain during their term of instruction. According to the number of the *wali* so the number of places where shelters are built may vary from one, two or three, to as many as eight. Each of these places is called *Ndapala*. They may be many [346]
miles apart and are so placed for the convenience of the mothers in various groups of villages who bring the food daily to the group of boys from those villages.

The boys when they originally left the village were wearing a large bark-cloth covering, with beads and calico, which latter articles have been taken by the *m'michila* and his assistants. At *Ndapala* they wear simply a loin-cloth of bark.

During their stay at *Ndapala*, the *wali* are given animal names by the *akamusi* who [553]
carry on the instruction of the boys until their return to *Lupanda*, the *m'michila* having gone back to his village immediately after the circumcision. The names given to the boys [551]
are commonly names of beasts of prey such as Alikula (*likula* = the jackal), Achisuwi (*chisuwi* = the leopard), etc.

Certain restrictions as to diet are laid upon the *wali* by the *m'michila*, e.g. no meat of 881
an animal killed by a beast of prey, no mudfish, *likambale*. He will not allow any villager 262
to visit *Ndapala* after seven P.M. and visitors may only be men who have been through the ceremony. An uncircumcised man is called *nabalale*, one who has not been to his *Unyago*.

Other restrictions as to foodstuffs may be made by the *akamusi*, generally in connection with the mythical origin of such food substances. A finger-shaped yam called *lipeta* is taboo, as it is said to have first sprung from the grave of a leper, the inference being obvious. After the *Unyago*, the boys have to undergo a special doctoring before they may partake of them. Bananas and rice are similarly refused them, the latter on account of a story to the effect that rice grew from the nostrils of a dead man, the idea doubtless having relation to the resemblance of rice grains to maggots. Fish is denied them by some masters of cere- [825]
monies, as it is said to have originated from the diaper of a woman which she threw away while bathing.

Each *m'michila* may have special observances of his own. One near Zomba caused all cassava to be roasted in a certain way. Rows of pieces of cassava were placed in split [252]
bamboo spits and so roasted before the fire in the manner of fish. If roasted in the ordinary way, the cassava would split and show the white floury material inside, signified by the verb *ku-lagala*. If this is eaten by the *wali*, it is said that the preputial wound would reopen.

The length of time spent at *Ndapala* varies from four weeks to as long as three or four 881
months. In the first place they must wait till the circumcision wounds of all are completely healed. Delay may be occasioned by complications having arisen in some cases. Again, permission to return may be withheld by the chief for some reason or other. Should one of the *wali* die at *Ndapala*, the body is buried out in the bush and nothing [766]
is said to the parents until after the ceremonies are over and all have returned to the village.

3:Stannus D-5 (ca. 1912) 1922 FT7 Yao FT7

286 have said, to this day, and also appearing as the proper dress in all ceremonies. Clothing nowadays, among the majority, consists of calico of various kinds brought in by traders and further referred to under *Dress*.

287 **Bark-cloth,** *lisondo* (*chisondo*, Chin.) is made by the men. A piece of bark about two feet by one is cut from the living tree; the outside portions are removed and the whole piece, after being well scraped, is soaked in water. When partly softened, it is removed and hammered out with a wooden mallet; the process is repeated till the piece of bark is soft enough to enable it to be wrung in the hands, thus further loosening the fibres. The soaking, hammering, wringing, and pulling are continued till a piece of cloth three by five feet is obtained. This is sun-dried and yields a soft, pliable, and warm material. Several pieces may be sewed together to make a large sheet. Bark-cloth is sometimes stained black by soaking it in a kind of thick mud found on the plains. The mallet consists of a piece of hard wood with serrations on its face, held in a split stick handle; it is called *mbomaro*. A log of wood with a flattened surface, called *mbongwa*, plays the part of the anvil, the man who is using the mallet usually sitting on one end of the log.

281 **Skins.** The Yao are unacquainted with the art of tanning. Skins are prepared only by drying, and then softened by hammering with stones. They are not employed as articles of clothing but the larger ones are used to sit upon, the skins of the leopard and the lion being reserved for chiefs. Others are used to make bags to carry flour, for powder pouches, and to cover guns. The blacksmith's bellows are made of goat's skin.

283 **String,** *lukonji* (*chingwe*, Chin.): Two kinds of string are made, one from flax, the other from the inner part of the bark of the baobab tree. Fishing nets are made from the former, game nets from the latter.

326 **Metals and metal working.** The only metal ever obtained from the ore by the Wayao was iron, and it is probable that they learned this from the Anguru and Anyanja. The industry is now nearly dead since the introduction of trade articles. A few blacksmiths still ply their trade, but their work is restricted to the manufacture of knives, spear-heads, and razors. Hoes are no longer made. The hoe blade supplied by traders is in the form of the old native-made article, which had in turn displaced the older hoeing-stick. The blacksmith deals with his mass of metal by hammering it with stones. He provides himself with bellows, a small iron hammer, and a rudimentary kind of tongs. He is called *wachipala*.

324 **Stone.** The only important uses for stones among the Yao are for supporting the cooking pots on the fire, for heating water in some medicinal preparations, and for grinding millet. For this last purpose, a large, flat stone, inclined at an angle, is set up in some convenient spot, often on the veranda, and the grain is ground by means of a smaller stone held in the hands.

412 **The flour pestle and mortar.** Maize flour is prepared by pounding the grain in a [252] big wooden mortar, by means of a wooden pestle, consisting of a pole some five feet long and four inches in diameter with round ends. The mortar consists of a tree trunk about

4: Stannus D-5 (ca. 1909) 1910 FT7 Yao FT7
Ngoni FR5
Maravi FR4

Women wear their cloth folded across the upper level of the breasts from right to left. Men and women often have two cloths, one over the loins, only the second fastening over the chest. M Y N 291

A menstruating woman also wears a small piece of calico corresponding to a diaper supported by string round the waist.[1] The same thing is worn after child-birth for six months. Angoni women always wear them. M Y N [841] [846]

The Angoni, Chipeta wear their cloth toga-fashion, carrying a fold of cloth on the left arm. An Angoni chief wears three such, blue, white and coloured, the first outside, the last next to the skin.

The material used is now practically everywhere European-made calico, formerly bark cloth only was used by Nyanja, though weaving had been accomplished by Angoni, where skins were and are used as articles of clothing. M Y N [246]

There is nothing to distinguish men of various grades, etc. Fashion at the present time is very capricious—some patterned cloth being much worn one month will have no sale a month later; this is true both of men and of women.

There is no class uniform, and no "costumes" are worn save in dancing (*q.v.*).

Men are now seen wearing a piece of calico twisted up on the head in turban form, a custom lately introduced from the coast—the only indigenous head-gear is the string skull-cap worn by Angoni widows. N [589]

Under the heading of dress must be included the bead aprons worn by Yao and Angoni. Among the former the use of this garment is restricted to the women, who in the house sometimes wear nothing else; among the Angoni the children often have them and no other clothing.

Sandals are sometimes made of skin and fastened on the feet with a thong when crossing thorny country.

Among Angoni the *mwado* only used to be worn; this is a small hard-cased fruit which was hollowed out and worn just covering the glans penis. N 291 824

FOOD, ETC.

The staple food throughout the country is either maize or rice, the latter only at various spots on the lake shore where it can be grown. Two fixed meals per diem are taken, at 9 or 10 a.m. and again at 6 p.m.; each consists of *nsima* porridge made from maize flour or rice flour or boiled rice with some *ndiwo* (relish) to which the salt is added. At odd times the native will eat anything that opportunity offers—a piece of cassava root, a boiled sweet potato, a roasted maize cob, etc. M Y 262 [264]

The *nsima* is made by stirring flour (*ufa*) into boiling water till a stiff paste is formed; this is kept cooking for five minutes and then scraped out with a wooden M Y 252

[1] Diaper = *mthete*: a woman keeps five or six; they are never put away in baskets but always hung up; a woman changes every time she bathes, using two or three per diem; they may be given to a female child to wear, but are then not worn again by a woman.

4: Stannus D-5 (ca. 1909)1910 FT7 Yao FT7
Maravi FR4

M Y 252 M Y 264 M Y 217 258 M Y 271 515 M Y 273

spoon into a clean shallow basket or on to a plate. The *ndiwo* or relish, consisting of vegetables such as beans or a kind of spinach, a little fish or chicken, is cooked in a separate pot, and round these those about to eat collect. Washing their left hands in water, they take some of the porridge and making a sausage shape of it, dip it in the *ndiwo* and then cram it into their mouths.

Salt was obtained either from natural deposits or from "salt earth" on a stream bank near Fort Johnston, or from the ashes of burnt *bango* reeds or *machedza*; by a method of percolation through porous pots.

The native rather drinks between meals—water. After eating he may wash his mouth out and clean his teeth, using the frayed end of a piece of wood as a brush.

Alcohol.—With the exception of the people living on the lower river, who drink fermented palm juice,[1] beer is the common alcoholic beverage. Beer is made from maize (*chimanga*) or millet (*mapira*); the crop of the latter is very largely used for beer making; it makes the best beer and is certainly preferred by Angoni.

Gruel is prepared by boiling flour with water; after an hour leaven (*chimala*) is added fermentation sets in; and it may be drunk the next day; it is the sweet beer, *mtibe* or *ontondera*. On the second day it is again boiled and is allowed to cool; the third day more leaven is added (*chikutiko*); the fourth day fresh gruel is made, and the contents of the original pot, now called *nganga*, is added to it, making two pots of beer. It may be drank the same day while hot or allowed to cool and taken on the second day.

Food-stuffs.

M Y 262

1. Maize (*chimanga*), millet (*mapira*, *mawaere*), rice (*mpunga*).
2. Cassava—sweet potato.
3. Beans and peas of many varieties.
4. Pumpkins, cucumbers, melons (*drungu*, *mkuka*, *chibwende*).
5. Many kinds of leaves growing wild—also pumpkin leaves, of which a kind of spinach is made.
6. Bananas (*paw-paw*), sugar cane and reeds are sucked.
7. White ants, locusts, honey.
8. Numbers of small animals are eaten by Chipeta, Angoni, etc. With the spread of Mohammedanism this is going out; rats, mice, hares, rock-rabbit, etc. Chipeta will eat dog, and I once saw one eat baboon. Frogs, shell-fish, snakes, crocodiles, crows, vultures, eagles, are never eaten.
9. Fish (*nsomba*), fresh or dried, is much eaten, thirteen varieties being enumerated.
10. Chickens, ducks, wild birds that they may snare.

M Y [177]

[1] Spirits used to be made by distilling from beer-and banana-and palm-juice by means of a pot and a gun barrel.

4: Stannus D-5 (ca. 1909) 1910 FT7 Yao FT7
Morovi FR4

Gaga, the residue after pounding maize, is eaten by the women. No oils are used in cooking, but of fat and suet any native is very fond. Meat may be dried and smoked if in large quantity: flesh, fish and fowl is commonly roasted on spits; small pieces of chicken may be made into a kind of stew with beans and eaten as the relish. When on a journey the fire is commonly made against a tree. The cooking vessels are cleaned before use, not after. The fried fish eaten is often partly decomposed, and meat which is very high, even with maggots, is cooked and eaten, maggots and all. M Y 262 [252] 251 484 264

Tabo.—Bushbuck is not eaten by many natives, as they say it feeds near graveyards. Fowls are not eaten by some, as this diet causes them to vomit; a snake-catcher never eats vegetables, and at the same time puts medicine on his hands. Many abstain from the flesh of certain animals as certain skin diseases are said to be caused thereby; all such diseases bear the name *wokwaenga*. M Y [753]

A man who loses a relation by drowning takes an oath that he will never again eat fish, and never drink water from such lake, river, etc. Here the idea is of course simply to avoid eating part of the relation.

A Nyanja and Machinga will not eat the flesh of the hippopotamus, because on the body they say there are the marks of a string round the loins and of a mat on his back, adding that long ago he was a man. Animals of prey would never under any circumstances be eaten. Milk used never to be drunk by an adult, as it was said to cause a man to become as a child. A man would not dare to drink woman's milk as it was said he would surely die of dysentery. M [825] M [272]

Tobacco, etc.—The smoking of tobacco was a custom introduced from the coast. Chewing was general among Machinga and Yao men and women, while the Angoni and Mañanja snuffed. With the tobacco a little lime, made by burning shells, was taken in the mouth. Giddiness and sleepy sensations were experienced after chewing. The Nyasa and Awisa smoke a hubble-bubble, the water vessel being a large sausage-shaped gourd with a reed stem supporting a large bowl of *mbobwa* wood, sometimes very nicely carved (Plate XXVII, Figs. 5 and 7). The Amyanja smokes a pipe with the bowl made of clay and the stem of bamboo (Plate XXVII, Fig. 6); these are made by the women. Tobacco is grown in nearly every village, a large-leaved rather coarse variety; it is sun-dried and rolled up into hollow rings 6 inches in diameter and 3 inches broad. For snuff (*Fidia womunas*) the sun-dried tobacco is further dried over a fire on a pan, when cold it is ground on a stone with a smaller stone by the women, and with it is mixed some ashes of the *ngoma* fig-tree. M Y 276 [177]

At Blantyre I obtained a water-pipe made of bamboo stem; this was the water reservoir; a stem of reed supports a little clay bowl. The mouth is placed over the upper end of the bamboo. Bhang (*cannabis indica*) is smoked in a pipe of this kind.

AGRICULTURE.

The people live by cultivating the soil. Both sexes help in hoeing and planting, the collecting of the crops being mostly done by women. The hoe is the M Y 241

4: Stannus D-5 (ca. 1909)1910 FT7 Yao FT7
Maravi FR4

M Y 252 M Y 264 spoon into a clean shallow basket or on to a plate. The *ndiwo* or relish, consisting of vegetables such as beans or a kind of spinach, a little fish or chicken, is cooked in a separate pot, and round these those about to eat collect. Washing their left hands in water, they take some of the porridge and making a sausage shape of it, dip it in the *ndiwo* and then cram it into their mouths.

M Y 217 258 Salt was obtained either from natural deposits or from "salt earth" on a stream bank near Fort Johnston, or from the ashes of burnt *bango* reeds or *machedza*; by a method of percolation through porous pots.

M Y 271 515 The native rather drinks between meals—water. After eating he may wash his mouth out and clean his teeth, using the frayed end of a piece of wood as a brush.

M Y 273 *Alcohol.*—With the exception of the people living on the lower river, who drink fermented palm juice,[1] beer is the common alcoholic beverage. Beer is made from maize (*chimanga*) or millet (*mapira*); the crop of the latter is very largely used for beer making; it makes the best beer and is certainly preferred by Angoni.

Gruel is prepared by boiling flour with water; after an hour leaven (*chimala*) is added fermentation sets in; and it may be drunk the next day; it is the sweet beer, *mtibe* or *ontondera*. On the second day it is again boiled and is allowed to cool; the third day more leaven is added (*chikutiko*); the fourth day fresh gruel is made, and the contents of the original pot, now called *nganga*, is added to it, making two pots of beer. It may be drank the same day while hot or allowed to cool and taken on the second day.

Food-stuffs.

M Y 262

1. Maize (*chimanga*), millet (*mapira*, *mawere*), rice (*mpunga*).
2. Cassava—sweet potato.
3. Beans and peas of many varieties.
4. Pumpkins, cucumbers, melons (*dzungu*, *mkuka*, *chibwende*).
5. Many kinds of leaves growing wild—also pumpkin leaves, of which a kind of spinach is made.
6. Bananas (*paw-paw*), sugar cane and reeds are sucked.
7. White ants, locusts, honey.
8. Numbers of small animals are eaten by Chipeta, Angoni, etc. With the spread of Mohammedanism this is going out; rats, mice, hares, rock-rabbit, etc. Chipeta will eat dog, and I once saw one eat baboon. Frogs, shell-fish, snakes, crocodiles, crows, vultures, eagles, are never eaten. M Y [177]
9. Fish (*nsomba*), fresh or dried, is much eaten, thirteen varieties being enumerated.
10. Chickens, ducks, wild birds that they may snare.

[1] Spirits used to be made by distilling from beer and banana-and palm-juice by means of a pot and a gun barrel.

1: Tew E-4 (no date) 1950 FT7 Yao FT7

132 completely exhausted or reduced to a mere trickle. The average annual rainfall over the last ten years is 29·75 in. The shore waters of Lake Pamolombe are well stocked [136] with fish. Both districts are well wooded, with a large variety of timber trees. In the [137] dry sandy soil where the population is unable to live for lack of water, the prevalent type is *tsunya*. A line of foothills from Zomba to Chikala are conserved as Forest Reserves.[1]

MAIN FEATURES OF ECONOMY[2]

241 The Yao are chiefly agriculturists, and in the old days were also hunters. As they live largely in tsetse-infested areas, they do not keep cattle, except for a few herds [231] near Fort Johnston and Zomba, in Nyasaland, and on the east of Lake Nyasa,[3] in the mountains of the Ruvuma valley around Mataka's.[4]

439 Abdullah describes a time when the Yao were economically self-sufficient, making their own bark-cloth, weaving, burning herbs for salt, and working iron for the tools they needed. Nevertheless, the tradition of coastward journeys for trading with the Arabs was well developed before the Europeans came to the country. They used to trade cattle and salt from the Manganja and Lomwe for tobacco and hoes, and in [567] exchange for slaves they got from the Arabs gunpowder, guns, swords, beads, coloured cloths, earthenware, and foodstuffs.[5] Slaving expeditions were among the most important activities of the chiefs.[6] The old tradition of the absence of the men from the village owing to these expeditions, is continued in modern times by soldiers and labour migrants to Southern Rhodesia and the Union. These men send back remittances to the area, but the main population is supported by agriculture. Cash is needed for purchasing salt and cloth, for paying certain dues and fines formerly paid in kind—adultery compensation, diviner's and initiation fees—as well as for tax and rent. Consequently, while certain crops, such as tobacco and ground-nuts, are grown for cash, any food crop is liable to be sold in one form or another in local markets or by the roadside.

262 The food crops are maize, sorghum, finger millet, sweet potatoes, ground-nuts, [241] legumes. Fish is an important article of diet. Eggs are believed to cause sterility and are only eaten by those outside the child-propagating age; milk is disliked and never consumed.[7] *Termite alates* (flying ants) are a much relished food when they come out on nuptial flights. Rice is considered a superior food, and is eaten when possible on ritual occasions.[8]

249 Tobacco is the main cash crop, with individual production under the supervision 439 of the Agricultural Department. The average cash earned per grower in 1943–4 was £5. 3*s*. This is overwhelmingly an external trade. Ground-nuts, which are sold at government-controlled markets to licensed buyers, bring in only a few shillings a year 226 to the average seller. Women obtain cash by selling beer. At the lake shore the fishing 439 industry is very important. Natives owning big nets are said to make between £20

[1] Murray, 1932, pp. 147–61.

[2] Unless otherwise stated, the information is from J. C. Mitchell, and relates to the Yao of south Nyasaland.

[3] Young, E., 1877, p. 102.

[4] Livingstone, 1874, pp. 72 and 80.

[5] Abdullah, 1919, pp. 10–11, 26–30.

[6] See Livingstone, 1874, p. 68; Young, E., 1877, p. 139; Thompson, 1882, p. 78; Sclater, 1893, p. 422; Maugham, 2, 1909, pp. 86–7; Laws, 1934, pp. 35–7.

[7] Buannus, 6, 1922, p. 34.

[8] Barker, 1934, p. 14.

3: Stannus D-5 (ca. 1912) 1922 FT7 Yao FT7

against all evils — witchcraft, attack by lions, etc. The *ahawusi* then set about building 881
shelters in which the *wali* will remain during their term of instruction. According to the number of the *wali* so the number of places where shelters are built may vary from one, two or three, to as many as eight. Each of these places is called *Ndapala*. They may be many [346]
miles apart and are so placed for the convenience of the mothers in various groups of villages who bring the food daily to the group of boys from those villages.

The boys when they originally left the village were wearing a large bark-cloth covering, with beads and calico, which latter articles have been taken by the *m'michila* and his assistants. At *Ndapala* they wear simply a loin-cloth of bark.

During their stay at *Ndapala*, the *wali* are given animal names by the *ahawusi* who [553]
carry on the instruction of the boys until their return to *Lapanda*, the *m'michila* having gone back to his village immediately after the circumcision. The names given to the boys [551]
are commonly names of beasts of prey such as Alikale (*likale* = the jackal), Achinawi (*chinawi* = the leopard), etc.

Certain restrictions as to diet are laid upon the *wali* by the *m'michila*, e.g. no meat of 881
an animal killed by a beast of prey, no mudfish, *likumbale*. He will not allow any villager 262
to visit *Ndapala* after seven P.M. and visitors may only be men who have been through the ceremony. An uncircumcised man is called *mbalale*, one who has not been to his *Unyago*.

Other restrictions as to foodstuffs may be made by the *ahawusi*, generally in connection with the mythical origin of such food substances. A finger-shaped yam called *lipeta* is taboo, as it is said to have first sprung from the grave of a leper, the inference being obvious. After the *Unyago*, the boys have to undergo a special doctoring before they may partake of them. Bananas and rice are similarly refused them, the latter on account of a story to the effect that rice grew from the nostrils of a dead man, the idea doubtless having relation to the resemblance of rice grains to maggots. Fish is denied them by some masters of cere- [825]
monies, as it is said to have originated from the diaper of a woman which she threw away while bathing.

Each *m'michila* may have special observances of his own. One near Zomba caused all cassava to be roasted in a certain way. Rows of pieces of cassava were placed in split [252a]
bamboo spits and so roasted before the fire in the manner of fish. If roasted in the ordinary way, the cassava would split and show the white floury material inside, signified by the verb *ku-lapala*. If this is eaten by the *wali*, it is said that the preputial wound would reopen.

The length of time spent at *Ndapala* varies from four weeks to as long as three or four 881
months. In the first place they must wait till the circumcision wounds of all are completely healed. Delay may be occasioned by complications having arisen in some cases. Again, permission to return may be withheld by the chief for some reason or other. Should one of the *wali* die at *Ndapala*, the body is buried out in the bush and nothing [766]
is said to the parents until after the ceremonies are over and all have returned to the village.

3:Stannus D-5 (ca. 1912) 1922 FT7 Yao FT7

19. That portion of the gut of animals having folds of mucus membrane inside, may be eaten only by old people past the child-propagating age. If a young woman should eat it, she would have difficulty in labor. 771 784 DLA

20. It is believed that people who eat too freely of a little fish like whitebait called *matumba* get obstruction of the bowel by the wedging together of the bones. The treatment adopted is to pass up the rectum a smooth stick with a pad of rag at the end. This cannot be done by the person himself and so the aid of another has to be called in; only an intimacy, such as the relationship of brother-in-law gives, will warrant this service being asked.

21. The Yao believe that there is a little insect which lives in the ear, called *chinyene kipilumile*, which tells the person what is said to him, the wax in the ear being its environment. The pupil is called *mwanache jwa lisu*, the child of the eye. [826]

22. Among women, the uterus is called *nawuse* (*nuso* = eyes); it is supposed to be a little person who holds the foetus. When the child is born, *nawuse* cannot find it and starts looking about, the movements causing the afterpains.

23. A man making his first journey to the coast used to sprinkle himself with water from every stream he crossed to give him a safe journey. In the same way, women at the present day going between Zomba and Blantyre sprinkle their babies with water from each stream. [484]

24. An ant-like insect called *ndopetumbe* (*lumbotumbe*, Chin.) [*Anaphidris mephistis*] is lucky. On seeing it a native pats its belly and then rubs his own, wishing for plenty of food that day. If he is embarking on a journey or beginning some enterprise, he will wrap one of these insects in a fold of his loin cloth and take it with him for luck. [825]

25. When a native hears the *mwipe* bird call (its call is like the mew of a cat), if he wants something, he immediately says, "Oh *mwipe*, I want so-and-so. Be quiet and I will then be quiet, too!" If the bird ceases calling, he knows the wish will be granted. The female bird is said to be the more certain prophet.

26. The snake, *nabulubuti*, which lives in trees and is of a buff clay color with green markings, is said by natives to pierce the chest and tie a knot in itself on each side so that it can only be withdrawn by cutting off one knot. When the snake is thus withdrawn, its blood mixes with that of the man and he will die.

27. Najives have a habit of marking the spot where any event takes place by a stone by the side of the path, and every passer-by will add a stone for luck. In this way some large piles of stones have been made. [777]

28. A man resting on his way home from a long journey places a stone in the fork between the branches of a nearby tree, so that on his arrival he may find his wife has put by some food for him and has not used up the day's stock of flour.

29. A chameleon found digging in the path is said to presage the death of the finder's nearest relative. [789]

276 made by boiling down the solution obtained by straining a decoction of water and the ashes of banana leaves; it contains, of course, some of the hongwale salts from the banana leaves. Without this addition, snuff is said to lack its proper aroma. The Angoni do not warm their snuff, but add a snupdi made in a similar way from cow dung.

262 146 Food stuffs. According to the general supposition, the native lives on a very monotonous diet, with a great excess of carbohydrates to the exclusion of proteids and fats. While it is certainly true that he does not consider that he has been fed without his "nsali" of flour (maize, millet, rice or cassava), still he feels that his meal is a poor one if it does not also include some secondary dish, such as beans, fish, or green vegetables cooked like spinach.

243 262 The grains chiefly grown and used by the Yao are maize, millet, and a certain amount of rice.

Millets (sorghum): *Mapemba*, a tall variety, eight feet high, which is harvested late; *Mapemba ga nsunji*, a hairy variety; *Liambalaba*, a short kind, five feet high, which matures early; *Mbalao*, characterized by the fact that the ripe grains will fall when the plant is shaken, and by a rather bitter taste; *Nandenji*, a variety six feet high which ripens quickly; *Kapile*, a shorter variety with a bitter taste but, according to the natives, a pleasant smell. (It makes good beer.)

Elusine: *Liwanja*, about four feet high with very small grains; *Chindumbo*, used for making a very strong beer; *Mwendi*, a variety eight feet high. Cyperus grasses: *Usanja*; [273] there are two varieties, *Kanimbata*, which ripens up and is used for making strong beer, and another kind which is not early.

Maizes: A number of varieties of the species *Zea mays* are grown by the Yao: *Chinwan*, a black-grained variety; *Nampinda*, red maize; *Liwanja*, the seeds of which are large, white, and dented; *Nambinga*, with grains flattened on the free surface; *Kanjakanjala*, a dwarf maize about four feet high.

Rice (*Oryza sativa*): *Mpunga* (generic name *Likoti*), a large-grained variety; *Singawa*, with very long grains; *Linguvindimbo*, red rice; *Mbangala*, characterized by the strong, not unpleasant odor it gives out when being cooked.

244 262 Cassava: *Chimangwa* is grown everywhere, but the Yao do not prepare flour from it, preferring to eat it raw at odd times. There are several varieties; *Chingangwa cha chinwere*, white cassava; *Chimangwa cha nhwani*, a brown variety; *Liangu*, a bitter species (*Manihot utilissima*) which produces a very large root; *Chilasi* and *Kaw"ongo*, varieties of *Manihot aipi*, the former characterized by its long, tapering leaves, while the latter is a dwarf variety with a big root.

Beans: there are a number of species of beans grown: *Mbawanda* (*Cajanus indicus*), *ngunda* (*Vigna sinensis*), *ndunza* (*Phaseolus vulgaris*), *ndumba*, (*Phaseolus* sp.), *nandukuda*, (*Phaseolus* sp.), *ngandamuhi*, and a ground bean *njanza* (*Voandzeia subterranea*).

Peas, cowpeas (*Pisum sativum*), are grown in abundance. There are two other varieties: 244
mimo (groundnuts), and chindwaire. 262

Sweet potatoes: mbatata (*Ipomoea batas*), of which the natives are very fond; they distinguish a red and a white variety, mbatata nyanjojoo and mbatata nyamwera.

The tuber-like root of a bush called ngwendu is also eaten, likewise the young underground shoots of a palm tree. The leaves of the sweet potato and the leaves of many wild growing plants are collected by the women and cooked like spinach; the flowers of pumpkins are used in a similar way. Of fruits eaten, the banana, *lipondo*, takes first place. A very large number of species of *Ficus* are grown, including mwiwandudu, mbingo, mkoli, mwiri nyangaya, *lubutu* a dwarf banana, *lulywa* a wild banana, and mlungu, the plantain. The paw-paw is found all over the district. There are several varieties of pumpkin, lipungu, including mbonda, chindondoli, and a very large species called mtwa wa ngwena, "the crocodile's head." Varieties of cucumbers include *lingunda* and *lukitungulu*. 262 222

A large number of wild fruits are eaten, among them figs, *lubaja* (*Ficus*), *lindwa* (*Uapaca*), *chimili* and *lisungu*, the fruits of two species of *Landolphia*, mutungu or *Kaffir* oranges (a species of *Strychnos*), *chilundu*, the fruits of *Hyphaene* (palms), mukwakwa (*Myrianthus*) a wild tree belonging to the mulberry family, and others, mdimu, mukungumbwala, mkwakwa, chingulungulu, *chindungulu*, mukwala, likwanda, etc. The seeds from the heads of bulrushes (*Typha*) are roasted up and eaten.

All fish are eaten except the nyanga, which always causes urticaria.

The flesh of all the antelopes, of cows, sheep and goats is eaten greedily; only bushbuck is avoided by some people as it is said to cause a skin eruption. Elephant is shunned by many on account of its rough skin, also rhinoceros because of the ulcers which it often has on its body, and hippopotamus on account of the marks on its back which are thought to be skin to leprosy. People eating the flesh of these animals are supposed often to sicken with leprosy, the pachydermatous skin, the ulceration or anaesthetic depigmented patches of that disease being reproduced, as the case may be. Few will eat pig or warthog on account of the digging habits of these animals. It is thought they may sometimes grub up bodies from graves. These fish taboos may be due to Mohammedan influence. The lion, hyaena, and fox no one would touch, as they are supposed to be connected with sorcery;[1] but the heart of the lion might be eaten to acquire courage. Few will touch leopard flesh, but Kasungu's descendants do so. All will eat of the flesh of the serval cat but very few of the common wild cat. The rock rabbit, nyangwaiwa (mbira, Chin.), is refused by most. Yao say it is a "beast without shame," having no tail to hide what should in decency be hid. Very few will partake of the baboon, but monkey is acceptable to many. A few reject porcupine, supposing they will break out in spots, while the zebra may cause stripes, and none will touch the skunk. No one eats *ungulu*, a mouse that is believed to die if it crosses a path. All kinds of rats are eaten, but the shrew-rat and mice-rat only by boys. Snakes 262 753 [77] 262 [534]

[1] Vide supra, p. 336.

no one will touch. With the exception of carrion birds such as the crow and the hawk, most birds are considered fit to eat. The hornbill is not eaten, as it is supposed to carry part of a corpse on its nose.[1] Fowls form a regular article of diet, but some taboos in this connection are mentioned elsewhere.

Eggs are eaten only by children and old people; that is, by those outside the child propagating age. Milk is never consumed in any form. They say, "What a disgusting habit, to suck the juice of an animal while it is still alive!"

Pregnant women will not eat certain things lest the child be born with some deformity, such as the snout of a pig, or the white stripes of a zebra.

Art and decoration. Sculpture can hardly be said to be an art known to the Yao. The only piece of stone work I have ever seen was a granite boulder, on the surface of which cup-holes had been made for the game of *Bao* (Pl. IV, fig. 4).

Of late years, individuals here and there have begun carving wooden figures of men and animals. The Yao, of course, make no idols. It is uncertain exactly how long it is since any of these people started producing wooden figures. I should think that this art has sprung up within the past twelve or thirteen years, that is to say, since there has been a market for them among European residents. In the first place only natives and some of the commoner animals, the eland and leopard, were represented; since then, many animals and Europeans have been copied. The native is extraordinarily clever in reproducing characteristic features in dress, etc., so that a Portuguese is easily distinguished from an Englishman. The little models in ivory of animals and native household objects, made by the Swahili people on Lake Nyasa, have never been copied by the Yao. Neither do they make clay images of men and cattle as do the Zulu-descended Angoni and cattle-keeping Wankonde. No native would allow any wooden figure to remain in his house for fear of ill luck; the women especially would look askance at them, fearing some misfortune in their next pregnancy. Little wooden figures of birds, however, are sometimes seen affixed to the point of the hut roof.

The making of carved figures, then, is of recent introduction, or rather is a recent event in the evolution of the Yao, as they were not taught but self-inspired in the work.

The ability to make representations of objects by drawing appears in the same way to originate spontaneously here and there as a sport. Natives with a talent for drawing are found among all the tribes, and among the Yao, it is said, there have always been some who have been able to draw. Naturally enough, their reproductions are made on the walls of their houses, and their subjects are generally animals of the forest, sometimes men and houses, or some other object of particular interest[2] (Pl. VIII, fig. 1). I also give sketches of some other drawings I have noted (Pl. XVIII); the line figure of a man at Makanjila's

[1] Vide supra, p. [illegible].

[2] Cf. A. Werner, 'A Native Painting from Nyasaland,' Geog. Jour., London 1899, vol. 8, no. 3, p. [illegible].

4: Stanmus D-5 (ca. 1909) 1910 FT7 Yao FT7
Ngoni FR5
Marravi FR4

Women wear their cloth folded across the upper level of the breasts from right to left. Men and women often have two cloths, one over the loins, only the second fastening over the chest. M Y N 291

A menstruating woman also wears a small piece of calico corresponding to a diaper supported by string round the waist.[1] The same thing is worn after child-birth for six months. Angoni women always wear them. M Y N [244] [246]

The Angoni, Chipeta wear their cloth toga-fashion, carrying a fold of cloth on the left arm. An Angoni chief wears three such, blue, white and coloured, the first outside, the last next to the skin.

The material used is now practically everywhere European-made calico, formerly bark cloth only was used by Nyanja, though weaving had been accomplished by Angoni, where skins were and are used as articles of clothing. M Y N [286]

There is nothing to distinguish men of various grades, etc. Fashion at the present time is very capricious—some patterned cloth being much worn one month will have no sale a month later; this is true both of men and of women.

There is no class uniform, and no "costume" are worn save in dancing (q.v.).

Men are now seen wearing a piece of calico twisted up on the head in turban form, a custom lately introduced from the coast—the only indigenous head-gear is the string skull-cap worn by Angoni widows. N [289]

Under the heading of dress must be included the head aprons worn by Yao and Angoni. Among the former the use of this garment is restricted to the women, who in the house sometimes wear nothing else; among the Angoni the children often have them and no other clothing.

Sandals are sometimes made of skin and fastened on the feet with a thong when crossing thorny country.

Among Angoni the *mondo* only used to be worn; this is a small hard-cased fruit which was hollowed out and worn just covering the glans penis. N 291 [324]

FOOD, ETC.

The staple food throughout the country is either maize or rice, the latter only at various spots on the lake shore where it can be grown. Two final meals per diem are taken, at 9 or 10 a.m. and again at 6 p.m.; each consists of *nsima* porridge made from maize flour or rice flour or boiled rice with some *ndiwo* (relish) to which the salt is added. At odd times the native will eat anything that opportunity offers—a piece of cassava root, a boiled sweet potato, a roasted maize cob, etc. M Y 262 [268]

The *nsima* is made by stirring flour (*ufa*) into boiling water till a stiff paste is formed; this is kept cooking for five minutes and then scraped out with a wooden M Y 252

[1] Diaper or *mikoto*: a woman keeps five or six; they are never put away in baskets but always hung up; a woman changes every time she bathes, using two or three per diem; they may be given to a female child to wear, but are then not worn again by a woman.

4: Stanner D-5 (ca. 1909)1910 FT7 Yao FT7
Marawi FR4

M Y 252 spoon into a clean shallow basket or on to a plate. The *ndiwo* or relish, consisting of vegetables such as beans or a kind of spinach, a little fish or chicken, is cooked M Y 264 in a separate pot, and round these those about to eat collect. Washing their left hands in water, they take some of the porridge and making a sausage shape of it, dip it in the *ndiwo* and then cram it into their mouths.

M Y 217 Salt was obtained either from natural deposits or from "salt earth" on a stream 258 bank near Fort Johnston, or from the ashes of burnt *bango* reeds or *mankodze*; by a method of percolation through porous pots.

M Y 278 515 The native rather drinks between meals—water. After eating he may wash his mouth out and clean his teeth, using the frayed end of a piece of wood as a brush.

M Y 273 *Alcohol.*—With the exception of the people living on the lower river, who drink fermented palm juice,[1] beer is the common alcoholic beverage. Beer is made from maize (*chimanga*) or millet (*mapira*); the crop of the latter is very largely used for beer making; it makes the best beer and is certainly preferred by Angoni.

Grout is prepared by boiling flour with water; after an hour leaves (*chimoto*) is added fermentation sets in; and it may be drunk the next day; it is the sweet beer, *utile* or *ontendere*. On the second day it is again boiled and is allowed to cool; the third day more leaves is added (*chikotile*): the fourth day fresh grout is made, and the contents of the original pot, now called *upungu*, is added to it, making two pots of beer. It may be drunk the same day while hot or allowed to cool and taken on the second day.

Food-stuffs.

M Y 262

1. Maize (*chimanga*), millet (*mapira, mawere*), rice (*mpunga*).
2. Cassava—sweet potato.
3. Beans and peas of many varieties.
4. Pumpkins, cucumbers, melons (*dzungu, mkoko, chikwende*).
5. Many kinds of leaves growing wild—also pumpkin leaves, of which a kind of spinach is made.
6. Bananas (*pese-pese*), sugar cane and reeds are sucked.
7. White ants, locusts, honey.
8. Numbers of small animals are eaten by Chipeta, Angoni, etc. With the spread of Mohammedanism this is going out; rats, mice, hares, rock-rabbit, etc. Chipeta will eat dog, and I once saw one eat baboon. Frogs, shell-fish, snakes, crocodiles, otters, vultures, eagles, are never eaten.

M Y [177]

9. Fish (*nsomba*), fresh or dried, is much eaten, thirteen varieties being enumerated.
10. Chickens, ducks, wild birds that they may snare.

[1] Spirits used to be made by distilling from beer-and banana-and palm-juice by means of a pot and a gun barrel.

4:Stannus D-5 (ca. 1909) 1910 FT7 Yao FT7
Morovi FR4

Gupa, the residue after pounding maize, is eaten by the women. No oils are used in cooking, but of fat and suet any native is very fond. Meat may be dried and smoked if in large quantity: flesh, fish and fowl is commonly roasted on spits; small pieces of chicken may be made into a kind of stew with beans and eaten as the relish. When on a journey the fire is commonly made against a tree. The cooking vessels are cleaned before use, not after. The fried fish eaten is often partly decomposed, and meat which is very high, even with maggots, is cooked and eaten, maggots and all.

Taboo.—Bushbuck is not eaten by many natives, as they say it feeds near graveyards. Fowls are not eaten by some, as this diet causes them to vomit; a snake-catcher never eats vegetables, and at the same time puts medicine on his hands. Many abstain from the flesh of certain animals as certain skin diseases are said to be caused thereby; all such diseases bear the name *mdwewenge*.

A man who loses a relation by drowning takes an oath that he will never again eat fish, and never drink water from such lake, river, etc. Here the idea is of course simply to avoid eating part of the relation.

A Nyanja and Machinga will not eat the flesh of the hippopotamus, because on the body they say there are the marks of a string round the loins and of a mat on his back, adding that long ago he was a man. Animals of prey would never under any circumstances be eaten. Milk used never to be drunk by an adult, as it was said to cause a man to become as a child. A man would not dare to drink woman's milk as it was said he would surely die of dysentery.

Tobacco, etc.—The smoking of tobacco was a custom introduced from the coast. Chewing was general among Machinga and Yao men and women, while the Angoni and Mananja snuffed. With the tobacco a little lime, made by burning shells, was taken in the mouth. Giddiness and sleepy sensations were experienced after chewing. The Nyasa and Awisa smoke a hubble-bubble, the water vessel being a large sausage-shaped gourd with a reed stem supporting a large bowl of ebonite wood, sometimes very nicely carved (Plate XXVII, Figs. 5 and 7). The Amanja smoke a pipe with the bowl made of clay and the stem of bamboo (Plate XXVII, Fig. 6); these are made by the women. Tobacco is grown in nearly every village, a large-leaved rather coarse variety; it is sun-dried and rolled up into hollow rings 6 inches in diameter and 3 inches broad. For snuff (*Fodia* women) the sun-dried tobacco is further dried over a fire on a pan, when cold it is ground on a stone with a smaller stone by the women, and with it is mixed some ashes of the *nyasa* fig-tree.

At Blantyre I obtained a water-pipe made of bamboo stem; this was the water reservoir; a stem of reed supports a little clay bowl. The mouth is placed over the upper end of the bamboo. Bhang (*cannabis indica*) is smoked in a pipe of this kind.

AGRICULTURE.

The people live by cultivating the soil. Both sexes help in hoeing and planting, the collecting of the crops being mostly done by women. The hoe is the

10: Sanderson D-5 (ca. 1920)1922 FT7 Yao FT7

The men and boys now pass through the arch in order of seniority; each splashes himself with the water in the trough, but neither speaks nor rinses the mouth. The women come next, led by the head-wife of the chief; the latter rinses her mouth and, instructed by the doctor, repeats a prayer similar to that offered by her husband. The remainder of the women merely splash themselves, like the men, before passing through the arch. All then return to the village, where the *pyajile* is continued. 751 796

Finally the doctor takes the hammer-head from the trough and hands it to the chief, who adds the haft into it, and, a hoe having been placed on the ground, goes through the form of forging the latter by beating it with the hammer. He then scrapes the ground with the hoe as if clearing a place overgrown with grass; he does not dig with it as in hoeing up the ground for planting seed. After this rite the chief again bathes in medicated water similar to that in the trough, and the ceremony is complete.

Whereas the *pyajile* ceremony and its adjunct, the rite of the arch, are now but rarely performed, no Yao will omit the rite of purification after a death in his family. This ceremony consists of two essential parts, both protective against the *ndoko*, a disease characterized by dropsy and supposed to be contracted by contact with a corpse, or by association, especially by sharing a meal, with those who have been in such contact. The first of these parts is bathing in certain medicines, which protects the bather from *ndoko*, and the second consists of a sort of communion meal, shared by all friends and especially relatives with those who have been contaminated, and designed to protect those friends and relatives. [178] 751 764 796 783

The decoction for bathing is made by soaking the roots of *lapodendati* and *lambondo* in water, together with the bark of *ndomwe*, one piece each from the east and west aspects of the tree; the water assumes a reddish tint, and the whole body is bathed. 751 783 824 765 [262]

The communion meal consists of porridge made from any kind of flour or of rice, and some *ngwada* beans. In the latter some scorched and powdered root of *ntandangulele* is mixed, with a little salt. All near relatives of the deceased must partake of this meal, as well as their wives and their near relatives; part is carefully put aside for the use of any relative unable to be present at the ceremony.

Latterly, since the spread of Islam among the WaYao, this rite has become confused with the distribution of food to the poor at the funeral of a Muslim, and the Arabic word *sadaqa* ("charity") is now generally used for it, to the exclusion of its wider, correct meaning. [177] [177]

It may be mentioned here that after the death of a child the father is denied access to his wife for a period of about three weeks, and the first act must be one of entire *interaction*. 765 784

MERRIOTTH SANDERSON.

4: Stahnus D-5 (ca. 1909)1910 FT7 Yao FT7
Maravi FR4

M 832 this is then added to a brew of new beer and given to her husband to drink. He will then think of and love only herself. This is said to have caused the death of some husbands.

Mpasi: medicine made and drunk by a woman to make her beloved by a certain man.

M 837 844 [847] At confinement a woman has to answer whether she has ever committed adultery; if she denies an adultery she may die, if she owns up and gives the name of the man this can be remedied. Adultery on the part of the father or mother is said to be a cause of abortion.

M 837 A man going away from his village for several months and leaving his wife behind and wishing her to remain faithful puts a knife into its sheath and hangs it in the hut, telling his brother. It is then believed that should anyone commit adultery with his wife separation after the coitus is impossible till some third party comes and pulls the knife from its sheath, and in doing so becomes a witness of the adultery.

M 833 M [262] [825] [522] Eating of eggs is believed to cause impotence in children or adults. Much fat eaten is said to have the same effect. It is believed that if a hare run up against the leg of a man while going through the forest he will become impotent. It is for this reason that dung of the hare is put at the door of a man to make fun of him as impotent. This is a trick played by *Adzukulu*.

M Y 837 263 758 If a woman who has committed adultery puts salt into the food while cooking, of which her husband will partake, will thereby cause his death. At the present time among the Yao-Mañanja community a woman always calls one of the children to do it—this speaks for itself. A woman, after connection with her husband, putting salt in food, may cause illness among any children partaking of the food.

M 837 If a man accuse his wife of adultery and she denies it, he will procure medicine and place it under her pillow, then in the middle of the night she will wake her husband and tell him the name of her lover.

M 787 777 *Mpingu* = ill omen. A journey would always be stopped if on setting out one of the party die; or should they meet an ant-eater or black snake. It used to be considered a sign of bad luck if one of them knocked the toes against a stone; now if blood flows from the big toe they say it presages good luck.

Y 832 826 The Yao at the age of sixteen years climbs the *mtumba* tree, and finding a fruit which is soft makes a hole in the middle and inserts the penis. After this procedure the penis is said to enlarge as the fruit grows; when the size desired is reached the fruit is cut down.

M 827 The native says that every one has a small animal inside the ear, the sounds it makes causes the man to hear. If the animal escapes the man becomes deaf. The animal is said to be ½-inch long, and wax is said to be its excrement.

M 484 777 Where a man rests on a journey he often puts a stone in the fork of the nearest tree; on many journeys there are regular halting places, often at cross roads, and here every passer-by adds a stone for luck, making quite big heaps.

4: Stannus D-5 (ca. 1909)1910 FT7 Yao FT7
Maravi FR4

M Y 614 [579] Men of the same clan must help each other. Two men of different clans fighting will be joined each by men of his clan; such two men may be interfered with and stopped fighting by someone of the same clan, but not by others. A fight between men of different clans is a lasting thing, not so a quarrel in the clan.

Every clan has a (king) *Karonga* and a (prince) *Chilembwe*, who is his son. These grades are only found among the Nyanja peoples.

M Y 264 [554] The Karonga may break bones when eating—this is significant of his power to break anything; the Chilembwe may not do so, being without land. Neither may eat while walking. These two are always chiefs.

Clan names.—In Machila men's songs one hears a number of clan names repeated sometimes.

After sneezing people sometimes exclaim, "*Musana wa* . . .; *Mdzukulu wa* . . .; *Kubala kwa* . . ." (giving name of clan).

A man hearing another say this asks him, "Where do you come from?" He tells him, giving him names of his father and mother, etc.; if he does not know them he gives names of generations before.

The following are a few clan names:—

Achitalo, small rat.
Anamvula, rain.
Azimbiri, puff-adder.
Achikalembo.
Achikalina.
Achingamina, thunder.
Achimaunde, cloud.
Amwali-ngosi, hartebeeste.
Ambiwi, pig.
Ang'oni, birds.
Achiombe, fish.
Achinawombe.

MARRIAGE.

M 584 A man seeing a girl he would like to marry deputes his brother to go to the brother of the girl, who then calls the girl's maternal uncle, and he speaks to the mother on the subject. The mother consults the girl; if she refuse, nothing further is done. If she consents, the man calls his relations to come and be witness of his taking the girl as his wife; they meet in the *Bwala*. A house is assigned to the M 585 man in the village of the girl and there they go to live.

After six months the mother of the girl prepares beer. The uncles of the young couple, mothers, fathers, sisters, and brothers are invited. The girl's maternal uncle then speaks, addressing himself to the maternal uncle of the husband, saying, "We have called you here to drink beer and to see the house of your brother that you may return when you like. Should anything arise between these two newly married ones in the nature of a dispute, let them come to their respective uncles about the matter."

Then five pots of beer are drunk in the village, two are reserved for the witnesses to drink in the evening, and one for the two fathers and the headman.

4: Stannus D-5 (ca. 1909) 1910 FT7 Yao FT7
Ngoni FR5
Maravi FR4

Women wear their cloth folded across the upper level of the breasts from right to left. Men and women often have two cloths, one over the loins, only the second fastening over the chest. M Y N 291

A menstruating woman also wears a small piece of calico corresponding to a diaper supported by string round the waist.[1] The same thing is worn after child-birth for six months. Angoni women always wear them. M Y N [841] [846]

The Angoni, Chipeta wear their cloth toga-fashion, carrying a fold of cloth on the left arm. An Angoni chief wears three such, blue, white and coloured, the first outside, the last next to the skin.

The material used is now practically everywhere European-made calico, formerly bark cloth only was used by Nyanja, though weaving had been accomplished by Angoni, where skins were and are used as articles of clothing. M Y N [286]

There is nothing to distinguish men of various grades, etc. Fashion at the present time is very capricious—some patterned cloth being much worn one month will have no sale a month later; this is true both of men and of women.

There is no class uniform, and no "costumes" are worn save in dancing (*q.v.*).

Men are now seen wearing a piece of calico twisted up on the head in turban form, a custom lately introduced from the coast—the only indigenous head-gear is the string skull-cap worn by Angoni widows. N [589]

Under the heading of dress must be included the bead aprons worn by Yao and Angoni. Among the former the use of this garment is restricted to the women, who in the house sometimes wear nothing else; among the Angoni the children often have them and no other clothing.

Sandals are sometimes made of skin and fastened on the feet with a thong when crossing thorny country.

Among Angoni the *mundo* only used to be worn; this is a small hard-cased fruit which was hollowed out and worn just covering the glans penis. N 291 824

FOOD, ETC.

The staple food throughout the country is either maize or rice, the latter only at various spots on the lake shore where it can be grown. Two fixed meals per diem are taken, at 9 or 10 a.m. and again at 6 p.m.; each consists of *usima* porridge made from maize flour or rice flour or boiled rice with some *ndiwo* (relish) to which the salt is added. At odd times the native will eat anything that opportunity offers—a piece of cassava root, a boiled sweet potato, a roasted maize cob, etc. M Y 262 [264]

The *usima* is made by stirring flour (*ufa*) into boiling water till a stiff paste is formed; this is kept cooking for five minutes and then scraped out with a wooden M Y 252

[1] Diaper = *mthete*; a woman keeps five or six; they are never put away in baskets but always hung up; a woman changes every time she bathes, using two or three per diem; they may be given to a female child to wear, but are then not worn again by a woman.

4: Stannus D-5 (ca. 1909)1910 FT7 Yao FT7
Maravi FR4

M Y 252 M Y 264 spoon into a clean shallow basket or on to a plate. The *ndiwo* or relish, consisting of vegetables such as beans or a kind of spinach, a little fish or chicken, is cooked in a separate pot, and round these those about to eat collect. Washing their left hands in water, they take some of the porridge and making a sausage shape of it, dip it in the *ndiwo* and then cram it into their mouths.

M Y 217 258 Salt was obtained either from natural deposits or from "salt earth" on a stream bank near Fort Johnston, or from the ashes of burnt *bango* reeds or *machedza*; by a method of percolation through porous pots.

M Y 271 515 The native rather drinks between meals—water. After eating he may wash his mouth out and clean his teeth, using the frayed end of a piece of wood as a brush.

M Y 273 *Alcohol.*—With the exception of the people living on the lower river, who drink fermented palm juice,[1] beer is the common alcoholic beverage. Beer is made from maize (*chimanga*) or millet (*mapira*); the crop of the latter is very largely used for beer making; it makes the best beer and is certainly preferred by Angoni.

Gruel is prepared by boiling flour with water; after an hour leaven (*chimala*) is added fermentation sets in; and it may be drunk the next day; it is the sweet beer, *mtibe* or *ontondera*. On the second day it is again boiled and is allowed to cool; the third day more leaven is added (*chikutiko*); the fourth day fresh gruel is made, and the contents of the original pot, now called *nganga*, is added to it, making two pots of beer. It may be drank the same day while hot or allowed to cool and taken on the second day.

Food-stuffs.

M Y 262

1. Maize (*chimanga*), millet (*mapira, mawaera*), rice (*mpunga*).
2. Cassava—sweet potato.
3. Beans and peas of many varieties.
4. Pumpkins, cucumbers, melons (*drungu, mkulu, chibwende*).
5. Many kinds of leaves growing wild—also pumpkin leaves, of which a kind of spinach is made.
6. Bananas (*paw-paw*), sugar cane and reeds are sucked.
7. White ants, locusts, honey.
8. M Y [177] Numbers of small animals are eaten by Chipeta, Angoni, etc. With the spread of Mohammedanism this is going out; rats, mice, hares, rock-rabbit, etc. Chipeta will eat dog, and I once saw one eat baboon. Frogs, shell-fish, snakes, crocodiles, crows, vultures, eagles, are never eaten.
9. Fish (*nsomba*), fresh or dried, is much eaten, thirteen varieties being enumerated.
10. Chickens, ducks, wild birds that they may snare.

[1] Spirits used to be made by distilling from beer and banana and palm-juice by means of a pot and a gun barrel.

4: Stannus D-5 (ca. 1909) 1910 FT7 Yao FT7
Marovi FR4

Gaga, the residue after pounding maize, is eaten by the women. No oils are used in cooking, but of fat and suet any native is very fond. Meat may be dried and smoked if in large quantity: flesh, fish and fowl is commonly roasted on spits; small pieces of chicken may be made into a kind of stew with beans and eaten as the relish. When on a journey the fire is commonly made against a tree. The cooking vessels are cleaned before use, not after. The fried fish eaten is often partly decomposed, and meat which is very high, even with maggots, is cooked and eaten, maggots and all. M Y 262 [252] [251] [484] [244]

Tabo.—Bushbuck is not eaten by many natives, as they say it feeds near graveyards. Fowls are not eaten by some, as this diet causes them to vomit; a snake-catcher never eats vegetables, and at the same time puts medicine on his hands. Many abstain from the flesh of certain animals as certain skin diseases are said to be caused thereby; all such diseases bear the name *wokuwenga*. M Y [753]

A man who loses a relation by drowning takes an oath that he will never again eat fish, and never drink water from such lake, river, etc. Here the idea is of course simply to avoid eating part of the relation.

A Nyanja and Machinga will not eat the flesh of the hippopotamus, because on the body they say there are the marks of a string round the loins and of a mat on his back, adding that long ago he was a man. Animals of prey would never under any circumstances be eaten. Milk used never to be drunk by an adult, as it was said to cause a man to become as a child. A man would not dare to drink woman's milk as it was said he would surely die of dysentery. M [825] M [272]

Tobacco, etc.—The smoking of tobacco was a custom introduced from the coast. Chewing was general among Machinga and Yao men and women, while the Angoni and Mañanja snuffed. With the tobacco a little lime, made by burning shells, was taken in the mouth. Giddiness and sleepy sensations were experienced after chewing. The Nyasa and Awisa smoke a hubble-bubble, the water vessel being a large sausage-shaped gourd with a reed stem supporting a large bowl of *mbabwa* wood, sometimes very nicely carved (Plate XXVII, Figs. 5 and 7). The Amyanja smokes a pipe with the bowl made of clay and the stem of bamboo (Plate XXVII, *Fig.* 6); these are made by the women. Tobacco is grown in nearly every village, a large-leaved rather coarse variety; it is sun-dried and rolled up into hollow rings 6 inches in diameter and 3 inches broad. For snuff (*Fodia wonnan*) the sun-dried tobacco is further dried over a fire on a pan, when cold it is ground on a stone with a smaller stone by the women, and with it is mixed some ashes of the *ngwa* fig-tree. M Y 276 [177]

At Blantyre I obtained a water-pipe made of bamboo stem; this was the water reservoir; a stem of reed supports a little clay bowl. The mouth is placed over the upper end of the bamboo. Bhang (*cannabis indica*) is smoked in a pipe of this kind.

AGRICULTURE.

The people live by cultivating the soil. Both sexes help in hoeing and planting, the collecting of the crops being mostly done by women. The hoe is the M Y 241

1: Tew . E-4 (no date) 1950 FT7 Yao FT7

775 Kangomba, used to persuade Nyanja to help in the sacrificial rite. When Kapeni in
782 turn fled to Mount Soche from the Ngoni, and died there, the Yao addressed their offerings to him, not to Kangomba.[1] The word *Muhungu* has sometimes been interpreted to mean Supreme Being, God, Creator, but among the Yao it seems not to have
[776] a personal connotation. It was used to describe the agent in any mysterious event,[2] or the place where the ancestor spirits (*masoka*) were supposed to dwell. Daily life was
[769] full of acts of respect towards the ancestors, who were regarded as jealous of the living, and requiring constant propitiation.[3]

Sorcery

754 Accusations of witchcraft and measures for dealing with it play a dominant role in Yao social life. With certain exceptions nearly all diseases and deaths are thought to be caused by sorcery. The exceptional causes are: the hand of God, old age, the transgression of certain taboos, and battle wounds. If sorcery is suspected the relatives of the sick or dead man consult the diviner to identify the offender.

Yao (in common with the Maravi and many peoples of Central Africa) believe that sorcerers have a craving for human flesh, which they satisfy by killing with magic the
[835] victims of their malice and hatred. They acquire their magical powers by an apprenticeship, which might include incestuous relations with mother, sister, or mother-in-law, or sleeping on the grave of the mother for one night. The sorcerer then learns the medicines and finally demonstrates his power by killing a young relative by magic;
[266] he waits till the victim is buried, and then magically exhumes him for the secret feast with his fellow sorcerers. Each sorcerer who shares the flesh owes a debt to the one who secured the victim.

[755] Charms are used as preventive measures against sorcery. When a diviner has
754 diagnosed the cause of death as sorcery, retaliatory measures are taken. The headmen
683 of the village could either call in the witchfinder to identify the offender or he could call in the diviner to take action against all the sorcerers in the village. After the
[695] diviner, *Mabisalila*, had revealed the guilty ones, they were challenged to take the poison ordeal to prove their innocence. If they died, the proof and the punishment were simultaneously accomplished. If they survived, the diviner was held to have been at fault and they were acquitted. The witch doctor was supposed to entice sorcerers to the graveside, and slay them with magic more powerful than their own.

[695] The diviner's findings are to-day checked by the poison ordeal administered to a chicken. A sorcerer detected in this way might be asked to provide medicine for the man whose sickness he had caused, or after a death he might be compelled to pay compensation. If the accused is a village headman, he will not be summoned before a chief, but his brother will take the villagers away from the sphere of his influence, or he may be chased away from the district. Accusations of sorcery follow certain regular lines. Nearly all accusations fall on relatives. Diviners are consulted by matrilineal relatives of the sick or dead person, and the man most usually accused is the brother of the accuser, or the husband of his sister. Witchcraft is therefore a manner of expressing the hostilities latent in these relations, which are, in the Yao social system, full of tension.

[1] Macdonald, 1882, vol. i, p. 70.
[2] Hetherwick, 3, 1902.
[3] Heckel, 1935, pp. 14–15; Macdonald, 1882, vol. i, pp. 58–75, 204–13.

2: Mitchell E-5 (1946-1949) 1956 FT7 Yao FT7

622 neglect neither his sorority-group nor the husbands in his village,[1] that his sorority-group and his village were his garden and he must take care of the young plants in it. The husbands were the watchmen who look after the women in the village. A headman dare not take sides or be unfair, nor must he talk behind people's backs. He must take care to settle differences amicably by discussion at meetings. They advised him not to pay too much attention to his wives who may have quarrelled with his sisters and tell him that they have been insulting him. When he hears a report like that he may be unfair to his sisters and people will say that he has broken his village through listening to nonsense. This sort of instruction went on through the night.

On Friday when the beer was brewed, Mlamba and Mbalwe, both headmen and perpetual sons of Nyambi, came to the village [344] and told the men to build a small grass shed for the successor to sit in. This the men did, and the women were told to plaster it and clean the huts out for the strangers who would be coming to the ceremony. On Saturday morning before cockcrow, Makoka and Ncimba got up and told the women to cook a big pot of porridge because they were taking Cimombo to bathe and when they returned they would want to find porridge ready. [415] Makoka took some medicine called *mkulumo* in a bark container (*likungwa*) into the toilet enclosure. He put the medicine into [751] two jars of water and told Cimombo to wash himself in it daily as he was an important headman, and it would strengthen his 622 body.[2] After Cimombo had washed he went back into the hut where a mat was spread on the floor and on it were a dish of 266 porridge and three dishes of relish. Makoka and Ncimbo told him to take a little porridge, dip it into one of the relishes—whichever he chose—and eat it. Cimombo did so. They did not tell him that one of the dishes contained human flesh.[3] When he tried the dish of human flesh he vomited and all the villagers cried with joy, saying that he was a good chief because he had

[1] *Mbumba jao ni akamwini wao*—the meaning and significance of this in the village context is explained on p. 183.

[2] This is a euphemism for protective medicine against sorcery.

[3] The immediate question is: Where did the human flesh come from? No informant could tell me and I am inclined to believe that one of the dishes is 'ritually' made into human flesh for this ceremony. This special ceremony was always spoken about as if it were secret, especially from White people.

2: Mitchell E-5 (1946-1949) 1956 FT7 Yao FT7

vomited human flesh.[1] They said that they had a strong head- 622
man and that they could trust him; he was a good headman 266
without witchcraft. If he had been a sorcerer they would have kept scolding him until the next morning.

About two hours after sunrise the people gathered and started 622
dancing. At about this time Cimombo was brought out of the 527
hut and put in the grass shed which had been built for the occasion. This was the climax of the ceremony.[2] He sat on a chair in the grass shed with one of his two wives on either side. Makoka [533]
then started a chant, exhorting the visitors to come to throw pennies at Cimombo's feet. Some of the people there made [537]
speeches about the type of behaviour they would expect from him. Then Nyambi arrived from the court village in a ricksha. [493]
When the noise had subsided he told the people that if they disobeyed Cimombo it meant that they disobeyed the chief. He emphasized the importance of the rank of the new headman. After the speech he presented 12*s.* to Cimombo which was received on his behalf by Ncimbo. Nyambi then left and the ceremony was over, but the people remained to dance and drink beer.

This description of the procedure following the 'coming out 622
of the hut' is somewhat sketchy. The interaction of the head- 516
man and his villagers on this formal and ceremonial occasion is of great interest and importance. During the entire ceremony the headman adopts the pose which is appropriate for any Yao initiand. His hands are on his lap or on the arms of the chair and his head is bowed forward with eyes downcast. He neither speaks nor moves. His attendants, when necessary, wipe the sweat off his face or chase away the flies. The other occupants of the mat, who may be his wives, and sometimes his heir, adopt similar postures. In contrast to this, is the behaviour of the [201]
villagers who run about shouting wildly, the men discharging muzzle-loading guns, and women ululating in the typical Central African way.

Before the new headman comes out of the hut his mentors 622

[1] This is a test based on the witchlore of the Yao, who believe that sorcerers [754]
kill relatives with magic and then share out the flesh of their victims with fellow sorcerers in ghoulish feasts.

[2] Called the 'coming out from the hut' (*kukupeka nyumba*). It is of course the first public appearance of the headman in his newly assumed status.

3: Stanner D-5 (ca. 1912) 1922 FT7 Yao FT7

175 167 148 River at Mpimbi where they intended to settle. Here, an old chief, knowing that their presence would cause trouble, persuaded them by tales of many cattle far away on the other side of the river, to cross over, and there they remained.

Kawinga and Malemya, then, to avoid further raids from the north went down to the Upper Shiré River near Lake Pamalombe, Kawinga going to Mvera, while Malemya stayed on the east side of the river among the Anyanja, claiming friendship with them because they bore many of the same clan names. Later, Malemya moved up to the highlands about fifteen miles north of what is now Zomba, and Kawinga went to Chikala. Malemya was friendly with the Anyanja chief, Chenyusi, who was of his clan, and was therefore able to buy from him for a red blanket all the country from the Likwenu stream to the Namadzi River, a district thirty to forty miles long. There his people settled. [131]

Kawinga was once again attacked by the Makwangwala from the north, but beat them back, after which they returned to the country whence they came — German East Africa near Lake Nyasa. The Angoni chief was killed in this battle, and the story goes that two Yao captives were told off to carry the eviscerated body back to the Angoni country for burial. As they were not provided with food for the journey, the two men began to eat the corpse. After several days, this was discovered; one of the men was killed but the other escaped to tell the tale. These were barbarous days, and the Yao relate that after raiding a village, the Angoni would leave a pot cooking on the fire with the body of a child in it, well covered with beans, so that when they had gone away with their booty and the villagers who had taken refuge in the forest returned hungry, they would start eating the beans and then come upon the body of the child, and having eaten of the juices of a human body, they would have committed a terrible sin. [726] [262]

The immigration of the Amachinga into the country around Mangoche mountain caused the Amangoche Yao settled there to move. They passed into the Blantyre and Mlanje districts, and invaded the country of the Anyanja. The chief, Malemya, known as Nalutumbo died about 1880, and was succeeded by his nephew, a sister's son, according to the Yao custom. This nephew, Wandalama, then took the name of Malemya.

In consequence of this succession, there was considerable bad feeling between Wandalama and the other aspirant to the chieftainry, his cousin, Kumtaja. The latter moved down to the plain below Zomba mountain to the south, where he gathered about him a band of friends and malcontents. Malemya decided to attack him and with this purpose, sent two messengers, Nkopili and Mapundela, asking Chikusi and his Angoni to come and do the job for him. Led by Nyamuka, Njerumali, and Kabayi, the Angoni came from the Shiré River opposite Blantyre, via Matope. They attacked and routed Kumtaja who, owing to the thick country, managed to fall back with most of his people toward Lake Chilwa. Here he was received by his cousin, Chimombo, a son of Nalutumbo, and father of my interpreter, Chonga, who ruled among the Anyasa. Afterwards, he moved to Mpimbi on the Shiré where he built a stockaded village.

* Died July 16, 1918.

3:Stannus D-5 (ca. 1912) 1922 FT7 Tao FT7

754 Resident Magistrate at Blantyre, told me of a case where the grave of a well-known European hunter was opened and his trigger finger removed, the reason being obvious. The same thing is said to have occurred in regard to the heart of a brave man. In the former case the finger was probably worn as a charm; in the latter, the heart partly eaten and partly made into medicine. I have found human fingers and skulls among the outfits of witch-doctors. Such practices seem akin to those of cannibalistic societies found in other parts of Africa.

754 266 [575] 266 The natives insist that *wasawi* are banded together in some sort of society. There are numerous discrepancies in the evidence brought forward about *wasawi*, but such would necessarily arise and they do not, therefore, disprove the general belief in the actuality of *wasawi*. Be that as it may, it seems probable that though there may be little or no cannibalism at the present day, the beliefs about *wasawi* have arisen in consequence of common cannibalistic practices in the past. There are individual cases of cannibalism well known and one has only to call to mind that of Kamtukule of Malemya's village. This man more or less openly killed and ate a number of people. On one occasion after a fight, he was seen looking over the dead bodies of the slain foes and in answer to an enquiry, he denied that he wanted any spoils but said he was just marking the bodies, "that would be his share." Later on, his own son, who tells the story, brought an Angoni man into the village who wished to settle under Malemya. It was evening, so he was introduced into his father's (Kamtukule's) house where Kamtukule gave him food and later a mat on which to sleep, the son meanwhile having gone to a beer drinking. In the morning, he returned to take his Angoni friend to the chief, but his father said he had gone away. Entering the hut, however, the son came upon the Angoni's snuff-box, and said to his father, "No Angoni would go away and leave his snuff-box." But the father said, "Well, he has gone." The lad being suspicious again went into the hut and found the place where the Angoni had been sleeping drenched with blood. Going out again, he noticed blood dripping through the bottom of Kamtukule's grain-store and looking inside, he found the body.

This man Kamtukule was a great friend of the reigning Malemya's headwife, Kang'ando; after the death of Malemya and after his wives had passed to the present Malemya, circumstances arose in the village which cast suspicion on Kamtukule and the woman. One of two brothers was ill and, it appeared afterwards, that the woman had said to Kamtukule, "Won't you finish him off?" It is supposed that Kamtukule thought she meant the brother who was not sick; for it so happened that both died the same night. It was supposed they were killed in order that Kamtukule and the woman, his friend, might eat them. Malemya had the woman turned out of the village. She now lives near Zomba and has once come under my care. The man, who was also turned out, took up his abode near a highway where he is reported to have killed several Angoni porters whom he said he preferred, because "being travellers far away from their homes, no one would bother about them."

The father of one of my servants helped to clear out the remains of a body from his grain store on one occasion and shortly afterwards, it is supposed that his own sons who had said they could not allow it to go on any longer, employed some one to kill him, as he was found, one day, with his head smashed in. These are, I believe, a number of similar cases known. 266

A person is supposed to gain the powers of wanzi by procuring medicine from some one willing to sell his secrets at a price, and by performing certain rites usually connected with his method of bathing. It is said that "such and such a one takes his bath on the top of an ant hill" or "on the roof of his house by moonlight." The usual initiation into wanzi is a long business, the individual being successively initiated into all the various practices of ukoma, the supernatural. Medicines are made from a still-born child, from various plants, from the hyaena, etc., and used for preparing the individual in the new science. He is introduced to the hyaena, the fox, etc. It is also asserted that a man may acquire supernatural powers by having sexual intercourse with a near relative, a sister or mother. I have had pointed out to me an old man who is said to have wished thus to acquire power but the woman refused and he has been a laughing-stock ever since. 754 575 [835]

On one occasion, a man related to me the pathetic life story of his attempt to find his favorite sister who, like himself, had been taken away to the coast as a slave. In desperation he has adopted the above procedure to try to gain supernatural powers to help him but without result. It would therefore seem to be a method not particularly associated with wanzi.

The wanzi is supposed to bring about the death of his victim not by administering poison or other such direct means, but by the more subtle mode of making medicine "against" him. When the victim has succumbed and is in due course buried, the wanzi arrives at the grave to secure that for which he has been working. To the wanzi is attributed the power of making himself invisible, and of taking the form of an animal; owing to the carrion-eating habits of the hyaena, this animal form is most commonly taken. Other animal forms which are associated with the wanzi are the leopard, the fox, and the owl, all night-going animals. The Yao say, "The cry of the fox (jackal) is heard at night because he associates with wanzi doings." 754 [825]

Arrived at the grave after sunset, the wanzi blows his horn, the horn of a small antelope, to call his brethren; a fire with a blue flame is made by the grave and around it they dance, or the grave may be illuminated by blue flame without a visible fire. The wanzi calls upon the deceased to rise from the grave, addressing him by the name he bore before he was initiated, i.e. his child-name. Obeying the summons, the dead man rises to the surface of the ground, though how he comes out is not quite clear — "the hole may be ever so small." The risen dead is then killed again by magic medicine and his body divided to be eaten by the congregation of wanzi. It is said that the skull is made into a gourd, the eyes are used as beads, and the ribs formed into a girdle. [266]

4: Stanner D-5 (ca. 1909)1910 FT7 Yao FT7
Marawi FR4

M Y 352 M Y 264 M Y 317 259 G 318 515 M Y 273 M Y 262 M Y [177]

spoon into a clean shallow basket or on to a plate. The relish or relish, consisting of vegetables such as beans or a kind of spinach, a little fish or chicken, is cooked in a separate pot, and round them those about to eat collect. Washing their left hands in water, they take some of the porridge and making a scoop shape of it, dip it in the relish and then cram it into their mouths.

Salt was obtained either from natural deposits or from "salt earth" on a stream bank near Fort Johnston, or from the ashes of burnt *bango* reeds or mankolobe; by a method of percolation through porous pots.

The native rather drinks between meals—water. After eating he may wash his mouth out and clean his teeth, using the frayed end of a piece of wood as a brush.

Alcohol.—With the exception of the people living on the lower river, who drink fermented palm juice,[1] beer is the common alcoholic beverage. Beer is made from maize (*chimangu*) or millet (*mapira*); the crop of the latter is very largely used for beer making; it makes the best beer and is certainly preferred by Angoni.

Grout is prepared by boiling flour with water; after an hour leaves (*chimtole*) is added fermentation sets in; and it may be drunk the next day; it is the sweet beer, *mtole* or *catandwa*. On the second day it is again boiled and is allowed to cool; the third day more leaves is added (*chimtole*); the fourth day fresh grout is made, and the contents of the original pot, now called *ngwangu*, is added to it, making two pots of beer. It may be drunk the same day while hot or allowed to cool and taken on the second day.

Food-stuffs.

1. Maize (*chimangu*), millet (*mapira*, *mawere*), rice (*mpunga*).
2. Cassava—sweet potato.
3. Beans and peas of many varieties.
4. Pumpkins, cucumbers, melons (*dzungu*, *mkoko*, *chikwandi*).
5. Many kinds of leaves growing wild—also pumpkin leaves, of which a kind of spinach is made.
6. Bananas (*pese-pese*), sugar cane and reeds are cooked.
7. White ants, locusts, honey.
8. Numbers of small animals are eaten by Chipeta, Angoni, etc. With the spread of Mohammedanism this is going out; rats, mice, hares, rock-rabbit, etc. Chipeta will eat dog, and I once saw one eat baboon. Frogs, shell-fish, snakes, crocodiles, otters, vultures, eagles, are never eaten.
9. Fish (*nsombo*), fresh or dried, is much eaten, thirteen varieties being enumerated.
10. Chickens, ducks, wild birds that they may snare.

[1] Spirits used to be made by distilling from beer and banana and palm-juice by means of a pot and a gun barrel.

3:Stanzas D-S (ca. 1912) 1922 FT7 Tao FT7

881 During the period of seclusion at *N'dapulo*, rigorous discipline is maintained among the boys, the day commencing with bathing in a stream whither the *ualí* are driven before sunrise, a favorite form of punishment being to make the boy sit for hours in the cold water. Other disciplinary measures take the form of frequent beatings. At one *Uapape* I know of, there was a kind of mutiny among the boys. The *ohamuí* from a nearby *Uapape* were called in and the boys received very severe "hidings" for their trouble.

For the entire time, the *ualí* are occupied in receiving instruction given by their *ohamuí*, on the discipline of manhood; they are taught native customs as applied to their relations with their fellows, an exacting code of etiquette to be observed to their elders, and the observances of married life. They learn to become proficient in the arts associated with their sex — the making of baskets, mats, traps, etc., the method of agriculture, drumming and dancing. They stay up late into the night listening to the stories of their tribal history.

Until such time as the circumcision wound is healed, each boy must cook his own food, after which food is brought ready cooked by his mother.

Posted in the bush a little way from the encampment are some of the boy's guardians, *ohamuí* or *olombee* (sing. *olombe*) who act as pickets to ward off innocent or intentional intruders. They are armed with sticks, etc., and give pretty severe treatment to any inquisitive persons they catch. A visitor to *N'dapulo* may be required by them to give visible evidence of not being *olombe*. The mothers who come with food call from a distance, "*Alomee olombe!*" Answer is made, "*Atatchile tulpe!*" "Put down for us that we may eat."

881 When the chief decides that the time has come for the return from *N'dapulo*, he sends
273 for the *m'mitchile*. Arrived in the village with medicine which he has collected, he is given millet by the mother of the leader from which the malt for beer making is to be prepared, also a cock and a hen and a pot. Into the pot he puts a tail feather from the cock and one from the hen, together with his medicine; then the millet, and water is poured on, after which he goes to *N'dapulo* and shaves the heads of all the *ualí* beginning with the leader and then returns to his own village. When the millet has sprouted, the woman takes it out to dry on a mat, and the two feathers and the packet of medicine are laid on the mat by its side. From this time, all the mothers are busy preparing malted grain for brewing beer, and, when it is ready, the *m'mitchile* is again called to the village. He orders the women to prepare for brewing, to bring firewood, their brewing pots, and stones to support them on the fire. These are all set round in a circle in the presence of the chief and headmen. Across the stones the *m'mitchile* lays his "tails" and on the firewood he sprinkles some medicine; the "tails" are then removed and the pots set on the fire. Commencing with the pots belonging to the mother of the leader, he acts similarly all round. The following day, he again visits the scene of the brewing. Putting his "tails" on the ground, he dips from each pot in turn and pretending to drink the sweetener from the dipper, he empties it into other pots carried by his assistants. From his own pots, he then empties

3:Stanner D-5 (ca. 1912) 1922 FT7 Tao-FT7

some swamber into a big gourd. These his assistants will carry away, together with a hoe, to *Lapunda*, whither the o'mishila now goes to remain while brewing goes on for four days. 881

During their stay at *Lapunda*, the o'mishila and his assistants live on flour and chickens begged from the mothers of the well. On the first day nothing is done; on the second day they begin making the *Inpupo* or figures in relief of animals, etc., to be described later; *Nawumpowi* is made this day. On the third day the other figures are made and on the fourth day *ching'wulung'wula*. Into the ground where *ching'wulung'wula* is made, some of the strong beer, known as *ngungu*, which is added to the flour and water mixture on the fourth day as signified by *bo-kalpula*, is poured by the o'mishila. 273

When the work at *Lapunda* is finished, the o'mishila carrying his "tail" leads his assistants wearing their feather headdresses back to the chief's village singing:

"*Kingulula* *ukusu* *kunga* *ukulupula* *ku* *usui*, *wulungu* *ukusuwi* [533
"I must go and see beer perhaps they have mind at the village, sometimes ah dear! 534]
Ukilumula *ukusupiwi* *ngulpu* *usuu* *ukupumula* *uulu*!"
The going out of a day or two ago if I had not taken tobacco I would have died of hunger!"

Arriving at the village where the brewing is going on, the o'mishila takes a cup and putting his "tails" on the ground, he dips into the pot of beer belonging to the leader's mother, pours some on his "tail," and then drinks some. Then he puts more into a gourd, together with some medicine, and going up to the chief who sits in his verandah overlooking the brewing place, he hands, and first drinking a little himself, he presents the drinking gourd of beer to the chief who drinks and then returns the cup to the o'mishila who finishes it. Picking up his "tail," he then goes straight back to *Lapunda* while his assistants with some men nominated by the chief go round showing pots of beer in turn. The assistants shows by striking a pot with a medicine-tail. These pots of beer are then put aside to cool, while moderate drinking begins in the chief's house. This takes place in the morning of the day on which the well will return from *Ndapula* to *Lapunda*, and in the afternoon, the people from the villages will go out to *Lapunda* to take part in the return. The return is made about sunset.

The well at *Ndapula* are put into their shelters and the doorways barricaded. At sunset or just after, the place is set on fire and the well have to change their way through the back of the shelters. They then form in line, wearing a slip of bark cloth round their loins and over this, a kind of kilt called *mayajuwin* if made of frilled-out bark-cloth, or *mayuwa* if made of palm leaves. Accompanied by the elements, they proceed towards *Lapunda*, each carrying a stick of smouldering wood and an unlit torch of bark-cloth. 881 [343]

The burning of the huts at *Ndapula* has been the sign to the o'mishila that the well have left; he puts round his waist a bark cloth belt, shambu, and a calico sash round his chest with the ends hanging down behind and on his head he wears the large headdress made of the feathers of *ukungu*, the widow-bird. In each hand he carries the tail of gnu or zebra, held right end up, with the hollow end filled with "medicine." Thus arrayed, he goes out 881 533 534

While the wali thus march solemnly along shaking their wands, the assistants begin singing:

"Ee wanga ambiri"
"To the gate they have shot!"

to which the wali reply:

"Ennwa kwakupiri"
"There is no place where to pass!"

The n'nimbile remains at *Lepanda* till everyone else has left; he then sets fire to the shelters and leaving without looking back, runs to overtake the procession and then leads it on towards the village still at a slow pace, while all around is a yelling crowd of delighted mothers and other relatives and the assistants and drummers, all singing and shouting.

When the outskirts of the village are reached, the n'nimbile halts and waits for the chief to come out and give them permission to enter. The chief brings coins which unrolled on the ground measure the length of the procession of wali. Headed now by their leader, the wali walk over this coins, while the assistants roll it up behind them for the n'nimbile, as it is part of his payment. Flour may be brought him at the same time, carried by the chief's wives.

At an Unyago I witnessed at Kwimawa's, the halt was called on the bank of a stream at the edge of the village where a bamboo arch had been erected. The arrival of Chief Malenya at this point with coins and flour was the sign for a demonstration by his young men who ran forward as if in battle, firing off blank rounds from old Tower muskets and executing a kind of war dance.

After the coins has been handed over, the chief returns to his kraal and the procession continues into the village, across the village open space to the fence round the chief's house. There, the wali enter by a gateway and disperse over the courtyard where they find their sleeping-mats laid out ready for them by their mothers. The n'nimbile lays his "tail" on the leader's mat to bring good luck thereafter. With Mimmbile, there is no further part for the wali, but in some cases they are called upon by the chief to give an exhibition of their dancing and drumming. The wali sleep that night in the kraal and disperse the following day.

In the morning, the n'nimbile takes his "tail" and a stirring stick made from a millet stalk with the roots on it, and strikes the ground at points in a row in front of the chief's house. Here the pots of beer which have been prepared are placed in rows, those chosen by the chief and those chosen by the n'nimbile, and drinking commences. The n'nimbile, before he joins in, takes the wali to an ash-heap in the village and there sprinkles them with medicine from a grain-mortar after which they go with their shawari behind a house and change into new clothes. They then go and salute the chief by clapping their hands and depart to their villages, duly initiated and somewhat subdued by what they have been through. Their new names as "nam," may be given them by the shawari either at *Lepanda* or after the return to the village.

3: Stanner D-5 (ca. 1912) 1922 F77 Tao F77

There has never been any shortage of land and therefore the plotting out of gardens was a matter which caused little trouble. A man wishing to make a new garden the next season simply marked the site in the bush by snaring some trees or hoeing around some patches of grass and tying the grass ends into a knot. If anyone else came along and hoed this plot, the man who had marked it out still claimed it and need not pay for the hoeing done. Whenever a man was doubtful about a piece of land, he would ask advice of the headman of the village. 423

When an abandoned garden had become overgrown, anyone wishing to take it up applied to the headman who sent him to ask the original owners whether they wished to take it up again. The newcomer could take possession only with their permission. 361

Often if a village were moved, during the first season the people simply put up shelters in their gardens. Later, the site of the village was chosen and around it a medicine man sprinkled medicine to insure happiness and prosperity. The tree from which this medicine was made became sacred to the village and might not be used for firewood, or was subject to any other taboo the medicine man might care to make. He might also say, "In this village there shall be no pounding of grain at night," etc. 423 [789] [778]

If a village were to be built near a spot previously inhabited, medicine and offerings were made to the departed spirits of the former occupants to put them at rest and "open" the place to the newcomers. The beer-pot from the grave of some former chief or headman, who was supposed to have directed the destinies of the old village, was brought to the new location and beer placed in it to insure his continued guidance. [761]

In the case of a village into which a number of men had married, the spouses of the wives went to the spouses of the husbands and asked permission to move the village.* Later, beer was brewed in the new village and the spouses invited to come and drink and "put foot in the new village." [203]

Relationship. Family relationship among native presents certain difficulties to the European accustomed to equivalent relationship of males and females on both sides of the family. In the diagram below (Fig. 1) the relationship of the two children (C 8) will be traced. The mother and father (B 10 and 9) are the subjects and some but are addressed as sister and stati. The maternal uncles older and younger than the mother (B 11 and 12) are called abambwa and their wives (B 13 and 14) abangwa. The maternal aunts are addressed as sister, mother, anyone older than the mother being distinguished as sister wakubangwa, "the bigger" (B 15), a younger aunt as sister wanandi, "the lesser" (B 17); their respective husbands are addressed stati, stati wakubangwa (B 16), and stati wanandi (B 18). On the father's side the uncles are called stati wakubangwa (B 1) and stati wanandi (B 2), respectively, for those older and younger than the father, and their wives sister wakubangwa (B 3) and sister wanandi (B 4). The paternal aunts are called stati wakubangwa (female uncles) (B 5 and 7), their husbands (B 6 and 8) stati. 595 601

* Vide supra, p. 280.

3:Suanne D-5 (on. 1912) 1922 F77 Yao F77

276 made by boiling down the solution obtained by steeping a decoction of water and the ashes of banana leaves; it contains, of course, some of the inorganic salts from the banana leaves. Without this addition, snuff is said to lack its proper aroma. The Angoni do not warm their snuff, but add a vaspoil made in a similar way from cow dung.

262 146 Food stuffs. According to the general supposition, the native lives on a very monotonous diet, with a great excess of carbohydrates to the exclusion of proteids and fats. While it is certainly true that he does not consider that he has been fed without his "chisuki" of flour (maize, millet, rice or cassava), still he feels that his meal is a poor one if it does not also include some secondary dish, such as beans, fish, or green vegetables cooked like spinach.

283 The grains chiefly grown and used by the Yao are maize, millet, and a certain amount of rice.

262 Millets (sorghum): *Mapondo*, a tall variety, eight feet high, which is harvested late; *Mapondo ga wanaji*, a hairy variety; *Lisambalala*, a short kind, five feet high, which matures early; *M'balani*, characterized by the fact that the ripe grains will fall when the plant is shaken, and by a rather bitter taste; *Nandanji*, a variety six feet high which ripens quickly; *Kapile*, a shorter variety with a bitter taste but, according to the natives, a pleasant smell. (It makes good beer.)

Elevsine: *Lisanje*, about four feet high with very small grains; *Chindumbe*, used for making a very strong beer; *Mwendi*, a variety eight feet high. Cyprus grasses: *Usanje*; there are two varieties, *Kasambata*, which ripens up and is used for making strong beer, and another kind which is not early.

[273] Maizes: A number of varieties of the species *Zea mays* are grown by the Yao: *Chiuwa*, a black-grained variety; *Nanpalala*, red maize; *Lisanje*, the seeds of which are large, white, and dented; *Nambinga*, with grains fastened on the free surface; *Kanjalanjala*, a dwarf maize about four feet high.

Rice (*Oryza sativa*): *Mpunga* (generic name *Lihali*), a large-grained variety; *Singano*, with very long grains; *Linpanindimba*, red rice; *M'bungala*, characterized by the strong, not unpleasant odor it gives out when being cooked.

264 262 Cassava: *Chimangwa* is grown everywhere, but the Yao do not prepare flour from it, preferring to eat it raw at odd times. There are several varieties; *Chingangwa cha chiuwa*, white cassava; *Chimangwa cha wikuwi*, a brown variety; *Lisanga*, a bitter species (*Manihot utilissima*) which produces a very large root; *Chilusi* and *Kaw'anga*, varieties of *Manihot aipi*, the former characterized by its long, tapering leaves, while the latter is a dwarf variety with a big root.

Beans: There are a number of species of beans grown: *M'barawanda* (*Cajanus indicus*), *ngwanda* (*Vigna catiang*), *mbawa* (*Phaseolus mungo*), *mbawanda*, (*Phaseolus sp.*), *nimalalanda*, (*Phaseolus sp.*), *ngwalawalai*, and a ground bean *ngawa* (*Voandzeia subterranea*).

4. Stannus D-5 (ca. 1909)1910 FT7 Yao FT7
Maravi FR4

M Y 252 M Y 254 M Y 217 258 M Y 278 515 M Y ●273

spoon into a clean shallow basket or on to a plate. The *ndiwe* or relish, consisting of vegetables such as beans or a kind of spinach, a little fish or chicken, is cooked in a separate pot, and round these those about to eat collect. Washing their left hands in water, they take some of the porridge and making a sausage shape of it, dip it in the *ndiwe* and then cram it into their mouths.

Salt was obtained either from natural deposits or from "salt earth" on a stream bank near Fort Johnston, or from the ashes of burnt *bango* reeds or *machedza*; by a method of percolation through porous pots.

The native rather drinks between meals—water. After eating he may wash his mouth out and clean his teeth, using the frayed end of a piece of wood as a brush.

Alcohol.—With the exception of the people living on the lower river, who drink fermented palm juice,[1] beer is the common alcoholic beverage. Beer is made from maize (*chimanga*) or millet (*mapira*); the crop of the latter is very largely used for beer making; it makes the best beer and is certainly preferred by Angoni.

Gruel is prepared by boiling flour with water; after an hour leaven (*chimala*) is added fermentation sets in; and it may be drunk the next day; it is the sweet beer, *utibe* or *ontondera*. On the second day it is again boiled and is allowed to cool; the third day more leaven is added (*chikutiko*); the fourth day fresh gruel is made, and the contents of the original pot, now called *ngunga*, is added to it, making two pots of beer. It may be drank the same day while hot or allowed to cool and taken on the second day.

Food-stuffs.

M Y 262

1. Maize (*chimanga*), millet (*mapira*, *mawere*), rice (*mpunga*).
2. Cassava—sweet potato.
3. Beans and peas of many varieties.
4. Pumpkins, cucumbers, melons (*dzungu*, *mkulu*, *chibwende*).
5. Many kinds of leaves growing wild—also pumpkin leaves, of which a kind of spinach is made.
6. Bananas (*paw-paw*), sugar cane and reeds are sucked.
7. White ants, locusts, honey.

M Y [177]

8. Numbers of small animals are eaten by Chipeta, Angoni, etc. With the spread of Mohammedanism this is going out; rats, mice, hares, rock-rabbit, etc. Chipeta will eat dog, and I once saw one eat baboon. Frogs, shell-fish, snakes, crocodiles, crows, vultures, eagles, are never eaten.
9. Fish (*nsumbu*), fresh or dried, is much eaten, thirteen varieties being enumerated.
10. Chickens, ducks, wild birds that they may snare.

[1] Spirits used to be made by distilling from beer and banana and palm-juice by means of a pot and a gun barrel.

3: Stannus D-5 (ca. 1912) 1922 FT7 Yao FT7

two feet high and fifteen inches in diameter, hollowed out from above for about two-thirds of its length. Many are made with a kind of base or stand, and some have roughly carved bosses on the outside; these are called "the breasts," doubtless emblematical of women, a large part of whose life is spent in preparing flour (Pl. XV, fig. 15). 412 [532]

The fire-stick. *Ma'chese* are becoming more widespread year by year and soon the knowledge of how to make fire with a fire drill will be lost. The method employed among the Yao is as follows: a flat surface is cut on a piece of partly rotted wood. In the middle of this a small depression is made, and on one side of the piece of wood a groove is cut leading from the flat cut surface. The piece of wood is held firmly on the ground by one person with a piece of old scorched cloth or some charred sticks at the base of the groove. A second person, by rolling a stick of hard wood rapidly between his hands with the point directed against the depression on the flat surface in which a little sand has been placed, drills a hole into it. The heat developed is sufficient to cause the powdered rotten wood to start smouldering. This is then turned out on the cloth, which is gently waved in the air till it catches fire (Pl. XV, fig. 16). 372 [177]

Boats. With the exception of a small coracle-like vessel, *likwiqwa*, made of rough bark and used for crossing streams, the Yao have no boats. The dug-out canoes which they use at the present day are made for them by the Anyanja. In addition to the bark boat, they use a kind of raft made from the pith tree, *bungwa*. 501 [439]

Tobacco. The use of tobacco in some form is universal among the tribes of Nyasaland and the Yao are no exception. The method of use varies among the different peoples; smoking, chewing, and snuffing are all practiced, but while the Anyanja is essentially a pipe-smoker, the Yao takes snuff, although I think only lately he has also taken up smoking and chewing. A short time ago, a Yao who chewed would have been laughed at. The Anyanja do not chew but take snuff to a certain extent; the Angoni who do not smoke or chew are inveterate snuff-takers; the Atumbuka, Atonga, Asenga, and Ankonde are pipe-smokers and in lesser degree snuff-takers. 276

Tobacco is called *sesa* (*fodia*. Chin.). It is prepared by sun-curing the leaf, which is then rolled up into a twist and allowed to dry further. The common tobacco pipe consists of a clay bowl, often ornamented, and a reed stem; it was formerly called *ckilanga*, but is now known as *kalio* (Pl. XV, fig. 11). For hemp, *chamba*, the Yao use a water pipe called *ndundu* (*ngundu*, Chin.); this consists of a bamboo water container from which projects a reed stem surmounted by a clay bowl (Pl. XV, fig. 13). The word *ndundu* is also used for a tobacco pipe.

When tobacco is chewed, a little lime paste *ensubula* made from snail shells is put in the mouth "to bring out the flavor," a small clay jar *boiwe* used to carry the *ensubula*.

Both the Wayao and the Anyanja prepare snuff by grinding the broken-up tobacco leaves with a stone in a potsherd; the powder is then turned out into another sherd and warmed over a fire. A few drops of a preparation called *mapuli* is added for flavor. *Mapuli* is

3:Stanmus D-5 (ca. 1912) 1922 FT7 Yao FT7

276 made by boiling down the solution obtained by straining a decoction of water and the ashes of banana leaves; it contains, of course, some of the inorganic salts from the banana leaves. Without this addition, snuff is said to lack its proper aroma. The Angoni do not warm their snuff, but add a mapadi made in a similar way from cow dung.

262 146 **Food stuffs.** According to the general supposition, the native lives on a very monotonous diet, with a great excess of carbohydrates to the exclusion of proteids and fats. While it is certainly true that he does not consider that he has been fed without his "whack" of flour (maize, millet, rice or cassava), still he feels that his meal is a poor one if it does not also include some secondary dish, such as beans, fish, or green vegetables cooked like spinach.

243 262 The grains chiefly grown and used by the Yao are maize, millet, and a certain amount of rice.

Millets (sorghum): *Mapemba*, a tall variety, eight feet high, which is harvested late; *Mapemba ga nnunji*, a hairy variety; *Lisembelaka*, a short kind, five feet high, which matures early; *Mbelau*, characterized by the fact that the ripe grains will fall when the plant is shaken, and by a rather bitter taste; *Nandonji*, a variety six feet high which ripens quickly; *Kapile*, a shorter variety with a bitter taste but, according to the natives, a pleasant smell. (It makes good beer.)

Eleusine: *Liwanje*, about four feet high with very small grains; *Chindumba*, used for making a very strong beer; *Mwundi*, a variety eight feet high. Cyprus grasses: *Usunje;* there are two varieties, *Kaumbata*, which curls up and is used for making strong beer, and another kind which is not curly. [273]

Maizes: A number of varieties of the species *Zea mays* are grown by the Yao: *Chiaowa*, a black-grained variety; *Nangalala*, red maize; *Liwanje*, the seeds of which are large, white, and dented; *Nsachinya*, with grains flattened on the free surface; *Kanjalanjala*, a dwarf maize about four feet high.

Rice (*Oryza sativa*): *Mpunga* (generic name *Lihoti*), a large-grained variety; *Singano*, with very long grains; *Lingwindimba*, red rice; *Mbungala*, characterized by the strong, not unpleasant odor it gives out when being cooked.

244 262 Cassava: *Chinangwa* is grown everywhere, but the Yao do not prepare flour from it, preferring to eat it raw at odd times. There are several varieties; *Chinangwa cha chiwera*, white cassava; *Chinangwa cha mbwani*, a brown variety; *Liwapa*, a bitter species (*Manihot utilissima*) which produces a very large root; *Chilasi* and *Kam"anga*, varieties of *Manihot aipi*, the former characterized by its long, tapering leaves, while the latter is a dwarf variety with a big root.

Beans: there are a number of species of beans grown: *Mbevemende* (*Cajanus indicus*), *ngunde* (*Vigna sativa*), *mbwesa* (*Phaseolus mungo*), *mbwanda*, (*Phaseolus sp.*), *ntambakada*, (*Phaseolus sp.*), *ngondomalusi*, and a ground bean *njama* (*Voandzia subterranea*).

3: Stannus D-5 (ca. 1912) 1922 FT7 Yao FT7

415
531

● 276

276
412
372

1-10, Pottery; 11-14, Pipes; 15, Grain mortar; 16, Fire drill.

[End Plate 15]

4: Stannus D-5 (ca. 1909) 1910 FT7 Yao FT7
Moravi FR4

Gupa, the residue after pounding maize, is eaten by the women. No oils are used in cooking, but of fat and suet any native is very fond. Meat may be dried and smoked if in large quantity: flesh, fish and fowl is commonly roasted on spits; small pieces of chicken may be made into a kind of stew with beans and eaten as the relish. When on a journey the fire is commonly made against a tree. The cooking vessels are cleaned before use, not after. The fried fish eaten is often partly decomposed, and meat which is very high, even with maggots, is cooked and eaten, maggots and all. M Y 262 [252] [251] [184] [264]

Taboo.—Bushbuck is not eaten by many natives, as they say it feeds near graveyards. Fowls are not eaten by some, as this diet causes them to vomit; a snake-catcher never eats vegetables, and at the same time puts medicine on his hands. Many abstain from the flesh of certain animals as certain skin diseases are said to be caused thereby; all such diseases bear the name *wokwenga*. M Y [753]

A man who loses a relation by drowning takes an oath that he will never again eat fish, and never drink water from such lake, river, etc. Here the idea is of course simply to avoid eating part of the relation.

A Nyanja and Machinga will not eat the flesh of the hippopotamus, because on the body they say there are the marks of a string round the loins and of a mat on his back, adding that long ago he was a man. Animals of prey would never under any circumstances be eaten. Milk used never to be drunk by an adult, as it was said to cause a man to become as a child. A man would not dare to drink woman's milk as it was said he would surely die of dysentery. M [825] M [272]

Tobacco, etc.—The smoking of tobacco was a custom introduced from the coast. Chewing was general among Machinga and Yao men and women, while the Angoni and Mañanja snuffed. With the tobacco a little lime, made by burning shells, was taken in the mouth. Giddiness and sleepy sensations were experienced after chewing. The Nyasa and Awisa smoke a hubble-bubble, the water vessel being a large sausage-shaped gourd with a reed stem supporting a large bowl of mbalwa wood, sometimes very nicely carved (Plate XXVII, Figs. 5 and 7). The Amyanja smokes a pipe with the bowl made of clay and the stem of bamboo (Plate XXVII, Fig. 6); these are made by the women. Tobacco is grown in nearly every village, a large-leaved rather coarse variety; it is sun-dried and rolled up into hollow rings 6 inches in diameter and 3 inches broad. For snuff (*Fodia* [illegible]) the sun-dried tobacco is further dried over a fire on a pan, when cold it is ground on a stone with a smaller stone by the women, and with it is mixed some ashes of the upas fig-tree. M Y 276 [177]

At Blantyre I obtained a water-pipe made of bamboo stem; this was the water reservoir; a stem of reed supports a little clay bowl. The mouth is placed over the upper end of the bamboo. Bhang (*cannabis indica*) is smoked in a pipe of this kind.

AGRICULTURE.

The people live by cultivating the soil. Both sexes help in hoeing and planting, the collecting of the crops being mostly done by women. The hoe is the M Y 241

4: Stannus D-5 (ca. 1909) 1910 FT7 Yao FT7
Maravi F R4

M 535

and the feature of it was the introduction of life-size representations of animals made of bamboo and grass with men inside.

I once saw these at a *namwali* ceremony among the Awisa (*q.v.*).

12. *Nkula.*—Woman only present; danced on the occasion of a girl's first menstruation.

13. *Litiwo.*—Women only, on the occasion of the quickening with first child.

Y 535

14. *Njeula.*—Men and women, a quick shuffling step while standing in a circle.

15. *Sukuza.*—The body shaking (shoulders) dance of boys, they walk round in a ring, some fifty of them, the drums in the middle; when the bass drum breaks into a quicker time they all start shaking shoulders and bodies with intervals for two or three steps.

16. *Nanja.*—Danced in a circle, men and women alternately.

17. *Nkonde.*—A big dance with *sanji* rattles.

18. *Chibonde.*—Dancing boys dance.

19. *Mberuza.*—(1907) men and women; each carries a bango reed filled with pebbles—no drums.

20. *Manganji.*—A coast dance; palm leaf bags filled with pebbles are tied on the legs.

21. *Sanja.*—A *pas-de-deux*, each man with a rattle and head-dress; for a few moments they wander round each other picking up the time and tune, and then jump into a very fast step dancing and jumping into the air shaking the rattles.

22. *Chimwiniwini.*—A *pas-seul* by a man carrying a viol and bow with anklets of small sticks.

Y M 535

23. *Masuwo.*—Danced no longer. At Mponda's village a big crowd used to dance with skins round the loins and wooden anklets: in their hands they carried live snakes which had been rendered harmless by putting medicine over their holes before digging them out. Four drums as in *chindimba* were used. The women all fled away.

Description of Plates.

PLATE XXVI.

M 789 778 534 412

1. Iron tube with human hair.
2. Tortoise-shell containing "medicine."
3. Leaf packet of "medicine."
4. Tortoise-shell.
5. Iron knife.
6. Horn containing "medicine."
7. Seed rattle.
8. Bead amulet.
9. Stuffed squirrel skin.

1–9. Contents of the bag of an *Ula*-man.

PLATE XXVII.

M Y ● 415 787 534 276● 531

1. Gourd vessel, Yao.
2. Gourd rattle, Yao.
3. Divining-gourd.
4. Gourd for casting lots.
5. Malanja.
6. Amachinga.
7. Awisa.

4: Stannus D-5 (ca. 1909)1910 FT7 Yao FT7
Marawi FR4

Journal of the Royal Anthropological Institute, Vol. XL, 1910, Plate XXVII.

M
Y
415
787
534
276
531

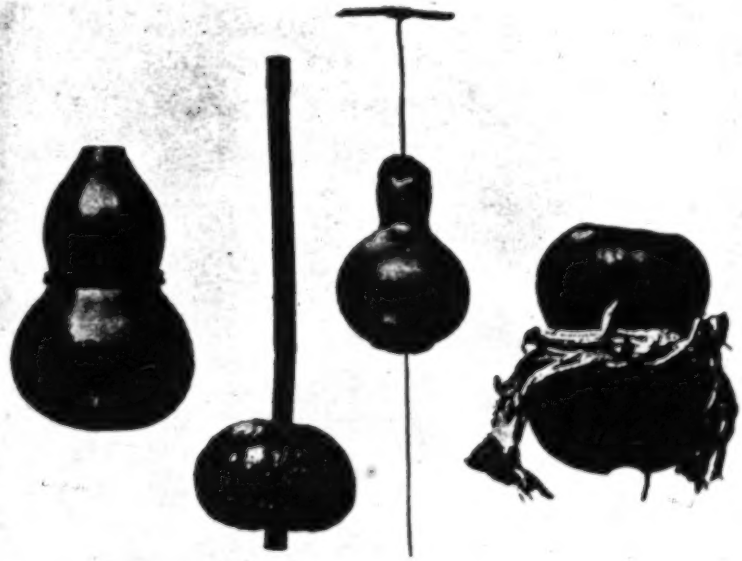

1 2 3 4

SOME TRIBES OF BRITISH CENTRAL AFRICA.

[P, 334(B)]

3:Stanmus D-5 (ca. 1912) 1922 FT7 Yao FT7

Again, charm medicine may be contained in various articles which are also generally worn round the neck. The teeth and claws of the beasts of prey are so employed, generally arranged in pairs bound together so as to form a crescent and suspended from a string. The teeth of crocodiles, lions, leopards, and the claws of the same beasts and of some large birds of prey are thus employed. The teeth etc., are in themselves charms against injury, probably against what one might call homologous injury. The idea of stuffing them with medicine is probably a secondary consideration, a process of fortification of the charm so that its use comes to have a more powerful influence. It is interesting to see of late years that the native, recognising the decorative value of these crescent-shaped amulets, has begun to copy them in lead and ivory. A series of these of graduated size is worn as a necklace by women. 751 757 825

When a medicine-man is consulted, part payment is made in advance, "payment to go and dig medicine (roots)." The rest of the payment is made when the cure is effected. Should a patient not be satisfied with his treatment and wish to consult some other medicine-man, he pays to the first a quarter of the fee he would have paid if his cure had been effected; this is called "paying him to get his medicine away." Unless this is done, should he recover later, he will be liable to claims for full fees from all of the medicine-men he has consulted; each will say his own medicine has gone on acting and has effected the cure. A medicine-man may take a case he is treating into his own house. 756

In prescribing medicine, very particular instructions are given with an embargo on certain things which may or may not have some use and significance. A medicine-man in 1901 at Malenya's, who inoculated every one in the forehead with bullet proof medicine, said that no one must step across a *mwini* (pestle for pounding grain), and no one must eat the leaves of the sweet potato.

A medicine-man always partakes of part of the decoction he is giving to a patient to show that it is harmless; I think these preparations are mostly inactive. I should hate to sample all the castor oil I have prescribed, though many natives have had suspicions about me when I have not done so.

Poisons. Though there are a large number of species in this country, both vegetable and animal, from which poison might be extracted, those that have gained any reputation among natives and have come under my observation are but few in number. *Mwai* (*Mwabai* Chin.) "the ordeal poison," is the bark of *Erythrophleum guineense*. The natives distinguish two varieties of *mwai*, the two trees differing slightly in leaf, flower and bark; *mwai* is the *Erythrophleum guineense*, the second variety known as *mpanjila* is doubtless an allied species. *Mwai* is the poison employed in the poison ordeal.[1] It is administered in a poisonous dose as a decoction of the bark, recovery or otherwise depending on whether or not the poison is voided by vomiting. Natives give as the symptoms headache, giddiness, disturbances of vision, vomiting and purging, with slowing of heart beat. *Mpan-* 137 278 [695]

[1] Vide Index, p. [illegible].

3:Stanton D-5 (ca. 1912) 1922 FT7 Yao FT7

[137] ●278 aqila is a more deadly poison and is not used in the poison ordeal but is administered with intent to murder; it is usually given mixed with beer or in porridge. Death is said to be assured in a few hours. *Lipembele:* the Yao name of beetles belonging to the genus *Mylabris*, found in large numbers in June and July in the native gardens where they do much [136] damage to the bean crops. The name is, I think, more especially applied to a species with [278] yellow bands, those with red markings being said to be harmless. These beetles are prepared for poisoning food by frying and then grinding into a powder. In this form, they are administered with intent to murder or they may be taken for suicidal purposes, five or six beetles being used. These beetles contain cantharidin in a greater proportion than cantharis itself. The symptoms described by the natives as occurring after exhibition are constipation followed by high fever, and death eight hours later. This same beetle is known to other tribes and is the *nsunse* of the Anyanja.

The bile of the crocodile, *nyenge* (*nduku*, Chin.); *nyenge* and *nduku* also are used, meaning the gall-bladder. Crocodile gall has the reputation of being a powerful poison over nearly the length and breadth of Africa. It is known, I think, to all the tribes in Nyasaland. In this district, they qualify their beliefs by saying that the bile of crocodiles from Lake Chilwa and Chiuta which do not eat men is not poisonous. The poison is also said not to be used on the Lower Shiré River where, and where only, crocodiles are eaten as food by the natives. Among the Yao, the gall-bladder is removed with the contained gall, dried, and then ground in a little mortar or on a stone. The dose of the powder is said to be as much as would cover a sixpence. Symptoms are said to be great pain in the stomach, swelling and discoloration of the tongue, and loss of speech. Public destruction of [171] the gall-bladder of any crocodile which has been killed is said to be the custom on the West Coast of Africa, and the same is true of some tribes in Nyasaland as at Kotakota, but so far as I am aware, this is not done among the Yao.

The gall of other animals is similarly used, but among the Yao I am not quite certain of the species. *Lipiri*, the puff-adder, certainly is utilized, and I think other snakes, such as *Nahuhuhuti*, a grey, ash coloured snake, *Lisupi*, a water-snake six feet long, and *Soupe*, the crowing-snake. Certain lizards are also employed, such as *Lilwahwala*, and frogs, both *Chiulo* and the running frog, *Chinsenene*. Scorpions too have found a place among poisonous preparations, so it is said, and likewise, the bile of some mammals. Bamboo fibre, animal hair, the bones of fish, and ground glass, I have also heard mentioned as being administered with the desire to produce a fatal enteritis.

Pupal cases made of twigs and the contained pupa (species of the family of *Psychidae*) called *chimunga* or *chimu nyeri* (fr[illegible] "to eat" and *nyeri*, "fire-wood") are said when eaten by cattle to cause dea[illegible] I cannot vouch for the truth of this nor can I say whether they are ever given to man.

[137] 278 A wild yam, *mbwa* (*mulapa*, Chin.) is poisonous if not well boiled and the water thrown away, but is not used as a poison so far as I know. The same is true of *nyenge*, a kind of cassava.

3: Stannus D-5 (ca. 1912) 1922 FT7 Yao FT7

Strophanthus is specially reserved for poisoning arrows and it is doubtful if it is ever given by mouth; *Kombe* is the name used in this country, but there are two species of strophanthus in Nyasaland, *Strophanthus hombe* and *Strophanthus courmonti*. The seeds and bark are used and, less commonly, the root. They are mixed with the roots of a shrub called *Ntsanimba*, pounded together and boiled, and the liquid used to anoint the arrows. The use of poisoned arrows is a Manyanja custom adopted to some extent by the Yao.

A number of poisons are also employed in catching fish, *Nyanga* and *Mtulu* being the most common, also *Kamsimbila Nguchi* (*Nkudzi*, Chin.), and *Chingunga*.

Witchcraft. In my article on the Anyanja,[1] reference is made to witchcraft and *wfiti*. Beside the Nyanja *wfiti* or the Yao *mawi*, all tribes as far as I know in Nyasaland have firmly fixed among their beliefs, the conception of the supernatural human-flesh eater. It is a little difficult to define the term *wfiti* or *mawi*, as it has come to have the somewhat generalized sense of one who practices witchcraft, but the original meaning is defined by Scott,[2] a person who has acquired the knowledge of occult medicine by which he can kill his fellow man; "what makes the power so dreaded is not that the *wfiti* exercises this power for reasons of spite but (as is supposed), to eat the body of his victim." It is at once interesting to note that the word *wfiti* does not belong, according to Scott, to the personal class of nouns but to the *pa-ma* class, which seems to imply that they believe a *wfiti* to be something outside the idea of a person. Among the Anyanja in Zomba district, however, the word belongs to the first class of nouns (the personal class) as also does *mawi* in Chiyao.

The natives believe that any man in a village may be a *wfiti* or it might be more correct to say, is capable of changing into a *wfiti*. *Ufiti* is the state of being a *wfiti*; in Chiyao, *mawi*.

As I have pointed out under *Diseases*, practically all illness and death are thought to be due to the machinations of some person or persons. The inciting motive which may cause a man to compass the death of another may be spite, revenge, etc., or the desire of *mawi*. Until recent years, when the Government legislated to put down witchcraft, the charges of *mawi* were everyday occurrences. Whether or not the prevalence of the idea of cannibalism has any substance in correspondingly frequent practice has never been and now probably never will be surely proved. Duff Macdonald believes it to be so.[3] It is true that native graves have been and are still rifled and that the graves of some Europeans have been so opened in the past, as I have learned from eyewitnesses. It seems probable that the graves were tampered with by natives with the object of removing the human remains, possibly to be eaten or to obtain portions of the body to use as charms. Mr. L. T. Moggridge,

[1] 'Notes on some tribes of British Central Africa,' op. cit., p. 202.
[2] Op. cit., p. 545.
[3] Africana, op. cit., vol. 2, p. 313-314.

286 have said, to this day, and also appearing as the proper dress in all ceremonies. Clothing nowadays, among the majority, consists of calico of various kinds brought in by traders and further coloured to under *Dress*.

287 **Bark-cloth, Ikenede** (*ikinende*, Chin.) is made by the men. A piece of bark about two feet by one is cut from the living tree; the outside portions are removed and the whole piece, after being well scraped, is soaked in water. When partly softened, it is removed and hammered out with a wooden mallet; the process is repeated till the piece of bark is soft enough to enable it to be wrung in the hands, thus further lengthening the fibres. The soaking, hammering, wringing, and pulling are continued till a piece of cloth three by five feet is obtained. This is sun-dried and yields a soft, pliable, and warm material. Several pieces may be sewed together to make a large sheet. Bark-cloth is sometimes stained black by soaking it in a kind of thick mud found on the plains. The mallet consists of a piece of hard wood with serrations on its face, held in a split stick handle; it is called *ndumere*. A log of wood with a flattened surface, called *ndumpere*, plays the part of the anvil, the man who is using the mallet usually sitting on one end of the log.

281 **Skins.** The Tao are unacquainted with the art of tanning. Skins are prepared only by drying, and then softened by hammering with stones. They are not employed as articles of clothing but the larger ones are used to sit upon, the skins of the leopard and the lion being reserved for chiefs. Others are used to make bags to carry flour, for powder pouches, and to cover guns. The blacksmith's bellows are made of goat's skin.

283 **String,** *Ishenji* (*ishinjen*, Chin.): Two kinds of string are made, one from flax, the other from the inner part of the bark of the baobab tree. Fishing nets are made from the former, game nets from the latter.

326 **Metals and metal working.** The only metal ever obtained from the ore by the Wayao was iron, and it is probable that they learned this from the *Angoni* and *Anyanja*. The industry is now nearly dead since the introduction of trade articles. A few blacksmiths still ply their trade, but their work is restricted to the manufacture of knives, spear-heads, and razors. Hoes are no longer made. The hoe blade supplied by traders is in the form of the old native-made article, which had in turn displaced the older hoeing-stick. The blacksmith deals with his mass of metal by hammering it with stones. He provides himself with bellows, a small iron hammer, and a rudimentary kind of tongs. He is called *mwikipale*.

324 **Stone.** The only important uses for stones among the Tao are for supporting the cooking pots on the fire, for heating water in some medicinal preparations, and for grinding millet. For this last purpose, a large, flat stone, inclined at an angle, is set up in some convenient spot, often on the veranda, and the grain is ground by means of a smaller stone held in the hands.

412 **The flour pestle and mortar.** Maize flour is prepared by pounding the grain in a
[262] big wooden mortar, by means of a wooden pestle, consisting of a pole some five feet long and four inches in diameter with round ends. The mortar consists of a tree trunk about

M 283 [334] String is used to make their fishing nets, necklaces, and other handwork. For bow strings tendo achillies is used, also strips of skin, strings. On their musical instruments ordinary string or gum is used to form the strings.

M 432 Needles made of sharpened bamboo were formerly used, the blunt end being shaved into a pulp and then incorporated with shaved end of the string.

M 285 Netting is done in the ordinary way with a simple shuttle.

Leather.

M 7 281 The skins of their domestic animals—cattle, sheep, goats—and of antelopes and leopards are prized. No fish skins are used. Skins are removed from the animals by a median ventral incision and other incisions along the inner side of the legs. The Yao leaves the hair on the skin, some Chipeta remove it. The only treatment a skin gets is scraping and drying in the sun, then rubbing with stones and beating till worked soft. This is done by the men. I have only seen seen an ornamented skin, that of a sitatunga from Lake Bangweulu, North-east Rhodesia. Skins are but comparatively little used, occasionally to sit upon. In German territory every chief sits on a leopard skin. M [422] They are used of course to cover drums, make bags for carrying a supply of grain, and to make bellows for the metalworker. The skins of small animals are used as purses and tobacco pouches. N/ [281] Among the Angoni and Chipeta they are used as bib-cloths, also to support the baby on its mother's back, and of course to make shields.

Dyeing.

M 336 There is practically none. The root of a certain tree is cooked with gummy to give them a black colour, to be used in making mats with patterns; this gummy has been learned, I think, from the west.

At Liwonde, the root of the red wood tree is boiled in water and the decoction used for staining, and, I think, strengthening their fishing nets. Dyes are not used for any part of the body.

Painting.

M 332 332 Recently decoration of the outsides of their houses has come into fashion, a red earth and lime being used to depict men, cattle, antelopes, steamers and bicycles. Other merely geometrical designs are made, I think by Mohammedan coast people.

Stone-work.

M 329 No stone implements are used, except stones for grinding maize, some small pans and mortar. There is a lump of stone at Fort Anderson on which holes have been made for playing the stone game.

In Stanford D-5 (on. 1912) 1922 F77 Yao F77

286 have sold, to this day, and also appearing as the proper dress in all ceremonies. Clothing nowadays, among the majority, consists of calico of various kinds bought in by traders and further coloured to under *Dress*.

287 Bark-cloth, Ikomale (*ikimwale*, Chin.) is made by the men. A piece of bark about two feet by one is cut from the living tree; the outside portions are removed and the whole piece, after being well scraped, is soaked in water. When partly softened, it is removed and hammered out with a wooden mallet; the process is repeated till the piece of bark is soft enough to enable it to be wrung in the hands, thus further loosening the fibres. The soaking, hammering, wringing, and pulling are continued till a piece of cloth three by five feet is obtained. This is sun-dried and yields a soft, pliable, and warm material. Several pieces may be sewed together to make a large sheet. Bark-cloth is sometimes stained black by soaking it in a kind of thick mud found on the plains. The mallet consists of a piece of hard wood with serrations on its face, held in a split stick handle; it is called *mkomero*. A log of wood with a flattened surface, called *mkompwe*, plays the part of the anvil, the man who is using the mallet usually sitting on one end of the log.

281 Skins. The Yao are unacquainted with the art of tanning. Skins are prepared only by drying, and then softened by hammering with stones. They are not employed as articles of clothing but the larger ones are used to sit upon, the skins of the leopard and the lion being reserved for chiefs. Others are used to make bags to carry flour, for powder pouches, and to cover guns. The blacksmith's bellows are made of goat's skin.

283 String, *Ichiwji* (*ishiwjo*, Chin.): Two kinds of string are made, one from flax, the other from the inner part of the bark of the baobab tree. Fishing nets are made from the former, game nets from the latter.

326 Metals and metal working. The only metal ever obtained from the ore by the Wayao was iron, and it is probable that they learned this from the Angoni and Anyanja. The industry is now nearly dead since the introduction of trade articles. A few blacksmiths still ply their trade, but their work is restricted to the manufacture of knives, spear-heads, and razors. Hoes are no longer made. The hoe blade supplied by traders is in the form of the old native-made article, which had in turn displaced the older hooing-stick. The blacksmith deals with his mass of metal by hammering it with stones. He provides himself with bellows, a small iron hammer, and a rudimentary kind of tongs. He is called *wachipale*.

324 Stone. The only important uses for stones among the Yao are for supporting the cooking pots on the fire, for heating water in some medicinal preparations, and for grinding millet. For this last purpose, a large, flat stone, inclined at an angle, is set up in some convenient spot, often on the verandah, and the grain is ground by means of a smaller stone held in the hands.

412 The flour pestle and mortar. Maize flour is prepared by pounding the grain in a
[252] big wooden mortar, by means of a wooden pestle, consisting of a pole some five feet long and four inches in diameter with round ends. The mortar consists of a tree trunk about

1: Tew E-4 (no date) 1950 FT7 Yao FT7

and £30 per annum. It is profitable to carry fresh fish inland by bicycle even as far as Blantyre,[1] as the shore price to the retailer is 4s. a load, which later may fetch from 16s. to 24s.[2] Yao on the south-west lake shore grow an excellent quality rice.[3] Rice is also grown near Lake Chilwa, but is mainly sold in the market organized near the lake shore by the Agricultural Department.

Division of Labour

The men build the house, hoes, fishes, make the nets, baskets, grain-store, game-traps, and, in the old days, the bark-cloth. He cultivates the tobacco. He cuts down the trees and may help with the hoeing and harvesting. The woman hoes, sends the floor of the hut, sweeps, cooks, brings firewood, draws water, brews beer, makes the pots and pipes.[4]

Land Usage

There are two types of garden in the Yao areas south of Lake Nyasa: one the ordinary garden in which the staples grow, and second, gardens along the stream beds. These latter are especially valuable for providing out-of-season crops. In addition most householders have a few small plots for tobacco and ground-nuts.

The main garden is cultivated by the slash-and-burn method, common in Central Africa. The Yao, unlike the Bemba, garden occupies the whole area cleared. Burning is done just before the rainy season (October–November). The ash and soil are hoed into elongated mounds and grain is planted along the ridges. Gardens may be cultivated for more than five years. In the second and subsequent years of cultivation the stalks and weeds are piled up and burnt. There are signs of soil impoverishment. The gardens are cleared in August, and heaped to dry for burning. After the burning the seeds are planted in late November. By February and March green maize is available to supplement the diet, and by the end of April the crops are ready to be harvested. The maize is stored in wicker containers, while sorghum is stored in the huts on a stand. Cassava is planted in large mounds made by turning the turfs over, so that the roots are outside the mound and the vegetable matter inside. Legumes are planted in smaller gardens, or interplanted with the main crop. Ground-nuts are stored, after being shelled, in mud-plastered wicker containers, designed to be rat-proof. Tobacco is planted at the sides of the streams for hand-watering in the seedling stage, and then transplanted about January. The leaves are ready to be plucked about April and soon afterwards they are marketed. Sweet potatoes are planted in the rainy season, and are ready for eating in May. The stream gardens yield out-of-season crops—maize, beans, pumpkins, and also sugar-cane, which is used in the initiation ceremonies.

Craftsmanship

The Yao have few skills. All cultivation is by hoe; axes and knives are their only other technological equipment. The men make mats from reeds and palm leaf, and the women make pottery. The huts are strongly built from poles laced with bamboo and plastered with mud. The roof is thatched with grass. Under Arab influence the

[1] *Census of Native Population*, 1931, p. 16.
[2] Cullingham, 1948, p. 119.
[3] Bowman, n. 1910, p. 136; Macdonald, 1882, vol. i, p. 130.
[4] Aylen, 1931, p. 19.

3: Shannon D-5 (on. 1912) 1932 FT7 Yao FT7

323 Kpai near Sambo. Sometimes pots are also rubbed all over the outside or in patterns with oxuqu, a natural graphite.

323 574 Patterns of a simple character, often of the herring bone order, are commonly graved about the neck of the pots with the aid of a stick of bamboo. There is considerable variety in the size and shape of the pots made. As with gourds, the pot takes its name from the use to which it is put and not from the shape or size. All pots have rounded bottoms; some have a flattened base or standard.

The following varieties of pots may be mentioned:

323 415 1. *Lidendo*, large pots for beer-making. These are usually roughly made and seldom have any decoration on them; they stand about two feet high and are wide-mouthed (Pl. XV, figs. 1, 4).

2. *Lendo* (*ulendo*, Chin.): water-pots. These are usually well moulded and well finished pots, full bellied with broad base and a certain amount of neck. They are practically always decorated and often coloured. They are about twelve inches high and twelve inches across the broadest diameter (Pl. XV, figs. 8, 9, 10).

3. *Chindapo* (*ulindo*, Chin.): cooking pots used for cooking the flour porridge, *upuli*. These are wide, open-mouthed pots six to ten inches high, with bully and more or less straight sides (Pl. XV, figs. 5, 6, 7). This name also applies to the cooking vessel for medicinal concoctions.

4. *Chijungu* (*upulin*, Chin.): smaller pots of the same type as 3, used for cooking beans, fish, green stuff, and the edible *ukuqu* (*ukiwu*, Chin.) (Pl. XV, fig. 3).

5. *Mbide* (*ulumi*, Chin.): the bath water pot. The smallest pot used for heating water to bathe the husband after sexual intercourse bears the same name. It is found among both the *Anyanja* and the *Wayao* (Pl. XV, fig. 2).

6. *Mbide* (Yao and Chin.): the plain, a shallow, wide-open vessel.

Baskets. The basket work of the Yao is all of one type and is done by the men. All baskets are made of plaited strips of bamboo, the free edges of the strips being bound between thicker pieces of the same wood forming the rim, the binding being done with the stem of a creeper. They are made in various shapes and sizes. Some are rendered waterproof and used as beer mugs. The following types of basket are in use:

285 1. *Chinde* (*lidawa*, Chin.): a circular, open basket, shallow and wide, six to ten inches in diameter; it is used as a food dish or to winnow flour, etc. *Chitungu* (*usungwa*, Chin.), a rather larger one of the same shape, often decorated with beads is used to carry flour, while a still larger basket called *ukyuta* is commonly used by the women for winnowing out the chaff from the partly pounded maize (Pl. XVI, figs. 11, 12).

285 415 2. *Lukindo* and *ukindo* (in Chin., both are called *usungu*): deep baskets usually about as deep as they are broad; the bottom is approximately square, but the rim is circular. *Chikindo* is about six inches high and six inches in diameter; *lukindo* is about a foot in all dimensions. These large baskets are used for carrying any food-stuffs in bulk, e.g. grain and pumpkins (Pl. XVI, fig. 16).

3:Stanton D-5 (on. 1912) 1922 FT7 Yao FT7

3. *Mtengwi*: this large double basket one half of which fits over the other like a cover, is now very common among the Yao; it was copied from the Swahili *lipumude*. The body is made in the same way as the other baskets, but each half has a bound rim of wood which is always set prettily into patterns (Pl. XVI, fig. 12, and Pl. XVII). 285 415 [P7]

4. *Chimundi*: the beer vessel, a small hemispherical basket rendered waterproof by smearing with a sticky substance prepared from the pounded stem of the *mpwa* tree or from the root of the *mpwa* plant mixed with charcoal (Pl. XVI, fig. 13).

5. *Limungulo* (*lungu*, Chin.): the beer strainer made in the shape of *chitungu*, but the strips of bamboo forming the warp and the weft are of different thicknesses, so that spaces are left for the fluid to run through (Pl. XVI, fig. 14).

Mats. In years gone by the Yao made a rough kind of plaited matting of split reeds called *chipumdu*; it is not seen today. Another type of mat seldom used today is the *kitiko* (*ziko*, Chin.), made of a number of reeds of equal length bound together by several rows of interlacing string (Pl. XVI, fig. 7). Reeds are also used to make the *mpwa* (*mpuwa*, Chin.) (Pl. XVI, fig. 10). When dry they are split and fastened out with the smooth surfaces all on one side. A number of reeds so fastened lying side by side are then sewed together with native string, and form a clean, smooth mat for sitting or sleeping. 285

Mats made of plaited strips of sun-dried palm leaf are now in common use, the art of making them, I believe, having been introduced from the coast. Large mats of this kind called *kondi* are used in the chief's courtyard (Pl. XVI, fig. 8). Smaller ones called *mkeka*, or by the old people *mkwapa*, made from the leaf of the wild date palm, are used for sleeping (Pl. XVI, fig. 6). Since the advent of the Europeans, mat making has become an important industry, and *kondi* and *mkeka* are to be found in every European house.

A still finer kind of mat, circular in plan and stained in patterns, has lately been introduced by the Swahili. Red and black dyes are generally used; the red is either *mpwa*,[1] or a stain called *mkomolo* prepared from the bark of a tree called *mwako*; the black dye is made from the root of a vine, *lilumpa* (*ziduwa*, Chin.), the ink bean. [346]

The matting made of these strips of palm leaf is in the form of a ribbon from three to six inches wide, according to the fineness of the strips. The ribbon of matting is sewed into the form of a cylinder by plaiting the edges of the ribbon together in a large spiral. This cylinder of matting is then cut down one side and laid flat, and the cut edges finished off with a plaited mat border (Pl. XVI, fig. 6). It will be seen that, owing to the way they are made, these mats are never quite rectangular. The ribbon of matting used for the circular mats is narrower still and sewed round and round in a flat spiral fashion.

Cloth. The Yao in years gone by made a woven cloth, but the art has long since died out, and I have never seen a piece of native-made cloth. I imagine, inasmuch as bark-cloth is still worn by the poorer people, that the native-made woven cloth was only worn by the few, probably the chiefs. The other cloth was undoubtedly bark-cloth, worn, as I 286

[1] This mpwa, p. 342.

1-5, Drummer's kit; 6-10, Mats; 11-16, Baskets

[End Plate 16]

285
531

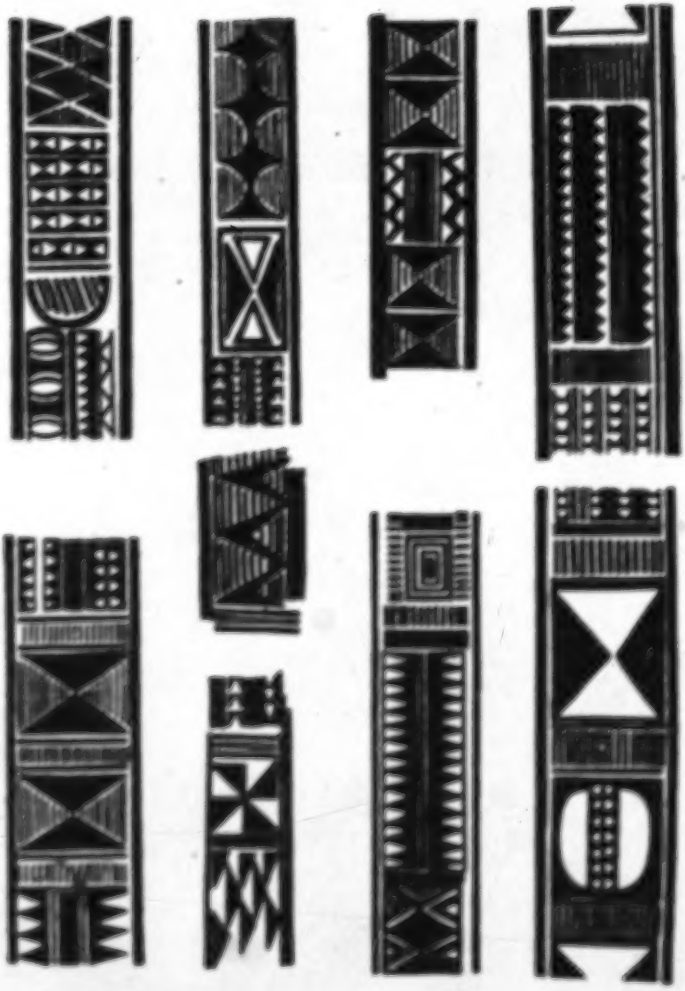

Designs drawn from the walls of the village huts

[End Plate 17]

3:Stanton D-5 (ca. 1912) 1922 FT7 Yao FT7

3. *M'mapsi*: this large double basket one half of which fits over the other like a cover, is now very common among the Yao; it was copied from the Swahili *Kjumunda*. The body is made in the same way as the other baskets, but each half has a broad rim of wood which is always cut profusely into patterns (Pl. XVI, fig. 13, and Pl. XVII). 285 415 [177]

4. *Chimundi*: the beer mug, a small hemispherical basket rendered waterproof by smearing with a sticky substance prepared from the pounded stem of the *mpoto* tree or from the root of the *mpoto* plant mixed with charcoal (Pl. XVI, fig. 12).

5. *Limpulo* (*lupu*, Chin.): the beer strainer made in the shape of *chilungu*, but the strips of bamboo forming the warp and the weft are of different thicknesses, so that spaces are left for the fluid to run through (Pl. XVI, fig. 14).

Mats. In years gone by the Yao made a rough kind of plaited matting of split reeds called *chipumbu*; it is not seen today. Another type of mat seldom used today is the *lichika* (*ghika*, Chin.), made of a number of reeds of equal length bound together by several rows of interlacing string (Pl. XVI, fig. 7). Reeds are also used to make the *mpoto* (*mpoto*, Chin.) (Pl. XVI, fig. 10). When dry they are split and fastened out with the smooth surfaces all on one side. A number of reeds so flattened lying side by side are then sewed together with native string, and form a clean, smooth mat for sitting or sleeping. 285

Mats made of plaited strips of sun-dried palm leaf are now in common use, the art of making them, I believe, having been introduced from the coast. Large mats of this kind called *lisudi* are used in the chief's courtyard (Pl. XVI, fig. 8). Smaller ones called *mdoka*, or by the old people *mdempu*, made from the leaf of the wild date palm, are used for sleeping (Pl. XVI, fig. 6). Since the advent of the Europeans, mat making has become an important industry, and *lisudi* and *mdoka* are to be found in every European house.

A still finer kind of mat, circular in plan and stained in patterns, has lately been introduced by the Swahili. Red and black dyes are generally used; the red is either *mpoto*,[1] or a stain called *mdumbi* prepared from the bark of a tree called *mundu*; the black dye is made from the root of a vine, *Mkumpu* (*ghikuu*, Chin.), the Irish bean. [346]

The matting made of these strips of palm leaf is in the form of a ribbon from three to six inches wide, according to the fineness of the strips. The ribbon of matting is sewed into the form of a cylinder by plaiting the edges of the ribbon together in a large spiral. This cylinder of matting is then cut down one side and laid flat, and the cut edges finished off with a plaited mat border (Pl. XVI, fig. 5). It will be seen that, owing to the way they are made, these mats are never quite rectangular. The ribbon of matting used for the circular mats is narrower still and sewed round and round in a flat spiral fashion.

Cloth. The Yao in years gone by made a woven cloth, but the art has long since died out, and I have never seen a piece of native-made cloth. I imagine, inasmuch as bark-cloth is still worn by the poorer people, that the native-made woven cloth was only worn by the few, probably the chiefs. The older cloth was undoubtedly bark-cloth, worn, as I 286

[1] Vide supra, p. 341.

3:Stanner D-5 (ca. 1912) 1922 FT7 Yao FT7

286 have said, to this day, and also appearing as the proper dress in all ceremonies. Clothing nowadays, among the majority, consists of calico of various kinds brought in by traders and further referred to under *Dress*.

287 Bark-cloth, *kisunde* (*chisunde*, Chin.) is made by the men. A piece of bark about two feet by one is cut from the living tree; the outside portions are removed and the whole piece, after being well scraped, is soaked in water. When partly softened, it is removed and hammered out with a wooden mallet; the process is repeated till the piece of bark is soft enough to enable it to be wrung in the hands, thus further loosening the fibres. The soaking, hammering, wringing, and pulling are continued till a piece of cloth three by five feet is obtained. This is sun-dried and yields a soft, pliable, and warm material. Several pieces may be sewed together to make a large sheet. Bark-cloth is sometimes stained black by soaking it in a kind of thick mud found on the plains. The mallet consists of a piece of hard wood with serrations on its face, held in a split stick handle; it is called *ndemere*. A log of wood with a fluted surface, called *ndemepere*, plays the part of the anvil, the man who is using the mallet usually sitting on one end of the log.

281 Skins. The Yao are unacquainted with the art of tanning. Skins are prepared only by drying, and then softened by hammering with stones. They are not employed as articles of clothing but the larger ones are used to sit upon, the skins of the leopard and the lion being reserved for chiefs. Others are used to make bags to carry flour, for powder pouches, and to cover guns. The blacksmith's bellows are made of goat's skin.

283 String, *ndewji* (*chinyao*, Chin.): Two kinds of string are made, one from flax, the other from the inner part of the bark of the baobab tree. Fishing nets are made from the former, game nets from the latter.

326 Metals and metal working. The only metal ever obtained from the ore by the Wayao was iron, and it is probable that they learned this from the Angoni and Anyanja. The industry is now nearly dead since the introduction of trade articles. A few blacksmiths still ply their trade, but their work is restricted to the manufacture of knives, spear-heads, and razors. Hoes are no longer made. The hoe blade supplied by traders is in the form of the old native-made article, which had in turn displaced the older hoeing-stick. The blacksmith deals with his *mana of metal by hammering it with stones. He provides himself* with bellows, a small iron hammer, and a rudimentary kind of tongs. He is called *mwalipale*.

324 Stone. The only important uses for stones among the Yao are for supporting the cooking pots on the fire, for heating water in some medicinal preparations, and for grinding millet. For this last purpose, a large, flat stone, inclined at an angle, is set up in some convenient spot, often on the veranda, and the grain is ground by means of a smaller stone held in the hands.

412 The flour pestle and mortar. Maize flour is prepared by pounding the grain in a
[262] big wooden mortar, by means of a wooden pestle, consisting of a pole some five feet long and four inches in diameter with round ends. The mortar consists of a tree trunk about

4: Stannus D-5 (ca. 1909) 1910 FT7 Yao FT7
Ngoni FR5
Maravi FR4

Women wear their cloth folded across the upper level of the breasts from right to left. Men and women often have two cloths, one over the loins, only the second fastening over the chest. M Y N 291

A menstruating woman also wears a small piece of calico corresponding to a diaper supported by string round the waist.[1] The same thing is worn after child-birth for six months. Angoni women always wear them. M Y N [241] [246]

The Angoni, Chipeta wear their cloth toga-fashion, carrying a fold of cloth on the left arm. An Angoni chief wears three such, blue, white and coloured, the first outside, the last next to the skin.

The material used is now practically everywhere European-made calico, formerly bark cloth only was used by Nyanja, though weaving had been accomplished by Angoni, where skins were and are used as articles of clothing. M Y N [246]

There is nothing to distinguish men of various grades, etc. Fashion at the present time is very capricious—some patterned cloth being much worn one month will have no sale a month later; this is true both of men and of women.

There is no class uniform, and no "costumes" are worn save in dancing (q.v.).

Men are now seen wearing a piece of calico twisted up on the head in turban form, a custom lately introduced from the coast—the only indigenous head-gear is the string skull-cap worn by Angoni widows. N [589]

Under the heading of dress must be included the bead apron worn by Yao and Angoni. Among the former the use of this garment is restricted to the women, who in the home sometimes wear nothing else; among the Angoni the children often have them and no other clothing.

Sandals are sometimes made of skin and fastened on the feet with a thong when crossing thorny country.

Among Angoni the *mondo* only used to be worn; this is a small hard-cased fruit which was hollowed out and worn just covering the glans penis. N 291 [24]

Food, etc.

The staple food throughout the country is either maize or rice, the latter *only at various spots on the lake shore* where it can be grown. Two fixed meals per diem are taken, at 9 or 10 a.m. and again at 6 p.m.; each consists of *ndiwo* porridge made from maize flour or rice flour or boiled rice with some *ndiwo* (relish) to which the salt is added. At odd times the native will eat anything that opportunity offers—a piece of *mawere* nut, a boiled sweet potato, a roasted maize cob, etc. M Y 262 [264]

The *ndiwo* is made by stirring flour (*ufa*) into boiling water till a stiff paste is formed; this is kept cooking for five minutes and then scraped out with a wooden M Y 252

[1] Diaper or *nchiri*; a woman keeps five or six; they are never put away in baskets but always hung up; a woman changes every time she bathes, using two or three per diem; they may be given to a female child to wear, but she then not worn again by a woman.

3:Stanna D-5 (ca. 1912) 1922 FT7 Yao FT7

286 have said, to this day, and also appearing as the proper dress in all ceremonies. Clothing nowadays, among the majority, consists of calico of various kinds brought in by traders and further reduced to under *Dress*.

287 Bark-cloth, *kisunde* (*chisunde*, Chin.) is made by the men. A piece of bark about two feet by one is cut from the Bring tree; the outside portions are removed and the whole piece, after being well soaped, is soaked in water. When partly softened, it is removed and hammered out with a wooden mallet; the process is repeated till the piece of bark is soft enough to enable it to be wrung in the hands, thus further loosening the fibres. The soaking, hammering, wringing, and pulling are continued till a piece of cloth three by five feet is obtained. This is sun-dried and yields a soft, pliable, and warm material. Several pieces may be sewed together to make a large sheet. Bark-cloth is sometimes stained black by soaking it in a kind of thick mud found on the plains. The mallet consists of a piece of hard wood with serrations on its face, held in a split stick handle; it is called *nhomero*. A log of wood with a flattened surface, called *nhengwe*, plays the part of the anvil, the man who is using the mallet usually sitting on one end of the log.

281 Skins. The Yao are unacquainted with the art of tanning. Skins are prepared only by drying, and then softened by hammering with stones. They are not employed as articles of clothing but the larger ones are used to sit upon, the skins of the leopard and the lion being reserved for chiefs. Others are used to make bags to carry flour, for powder pouches, and to cover guns. The blacksmith's bellows are made of goat's skin.

283 String, *lukwji* (*chinguo*, Chin.): Two kinds of string are made, one from flax, the other from the inner part of the bark of the baobab tree. Fishing nets are made from the former, game nets from the latter.

326 Metals and metal working. The only metal ever obtained from the ore by the Wayao was iron, and it is probable that they learned this from the Angoni and Anyanja. The industry is now nearly dead since the introduction of trade articles. A few blacksmiths still ply their trade, but their work is restricted to the manufacture of knives, spear-heads, and razors. Hoes are no longer made. The hoe blade supplied by traders is in the form of the old native-made article, which had in turn displaced the older hoeing-stick. The blacksmith deals with his mass of metal by hammering it with stones. He provides himself with bellows, a small iron hammer, and a rudimentary kind of tongs. He is called *wankipulo*.

324 Stone. The only important uses for stones among the Yao are for supporting the cooking pots on the fire, for heating water in some medicinal preparations, and for grinding millet. For this last purpose, a large, flat stone, inclined at an angle, is set up in some convenient spot, often on the veranda, and the grain is ground by means of a smaller stone held in the hands.

412 The flour pestle and mortar. Maize flour is prepared by pounding the grain in a
[251] big wooden mortar, by means of a wooden pestle, consisting of a pole some five feet long and four inches in diameter with round ends. The mortar consists of a tree trunk about

1: Tew E-4 (no date) 1950 FT7 Yao FT7

342 Yao make square houses.[1] Panelled doors and glass windows, deck-chairs and palm
177 furniture are becoming more and more popular. The men wear long Moslem robes
[29] and the women are clothed in cotton. In the rural areas there are usually a few crafts-
men who still ply their trades as carpenters and blacksmiths, though the latter no
326 longer smelt, but use scrap-iron.

Labour Migration

162 Statistics are not available for the Yao of Portuguese East Africa or Tanganyika
464 Territory. Yao constitute 34 per cent. of the total population of South Nyasa district,
15 per cent. of upper Shire, 11 per cent. of Blantyre and Zomba.[2] The proportion of
labour migrants in these districts was in 1937 as follows:[3]

District	Adult males fit to work	Percentage of emigrants	Number producing economic crops	Number of subsistence producers	Emigrants not heard of since 1930
South Nyasa	14,230	27·1	2,012 (12%)	12,205 (56%)	873
Upper Shire	14,873	13·9	2,333 (16%)	16,809 (87%)	933
Blantyre	25,230	13·6	3,788 (15%)	10,165 (40%)	988
Zomba	16,879	10·4	7,700 (29%)	6,040 (22%)	333

[134] South Nyasa district, which is undertile waterless bush with a long history of famine and food shortage, has the highest proportion of labour migrants. Upper Shire, though not fertile, is more prosperous, benefiting from the tobacco- and cotton-growing industries, and from the dried-fish trade.[4]

SOCIAL ORGANIZATION AND POLITICAL STRUCTURE

Kinship and Local Grouping

611 Among the Yao succession is matrilineal and marriage mainly matrilocal. Accord-
[591] ing to some informants succession formerly passed down the line of brothers, as with
the Bemba, but it now passes direct to the eldest sister's eldest son, or to descendants
of other sisters in order of seniority.[5] Chiefly succession follows the same rule, but the
most senior may be set aside for a more suitable candidate.[6]

611 Clan names, *lukoyo*, are inherited matrilineally, and formerly designated exogamous
614 units,[7] but the marriage prohibition has now ceased to operate. Holders of the same
clan name are unable to trace descent from a common ancestress, and for commoners
clan names seem to have quite lost their significance; they are, however, carefully
remembered in the chiefly lines and in other lines of hereditary rank, such as village
headmen.

614 Within the general kinship grouping of the clan, a smaller group is recognized,
613

[1] Werner, 1906, p. 104; Macdonald, 1882, vol. i, pp. 20-1, describes a round hut.

[2] 1931 Census information is taken because the district boundaries were changed between 1931 and 1945, so that the information in the 1945 Census would not be comparable or comparable with that given in the 1931 Survey of Male Adult Population in the *Bell Report*, Appendix A.

[3] *Bell Report*, 1938, Appendix A.

[4] Smith, 1937.

[5] Information, unless otherwise stated, is from Mitchell, and relates to south Nyambedi Yao.

[6] Johnston, 1897, p. 471; Meredith Sanderson, 1912, p. 350. Cf. Macdonald, 1882, vol. i, p. 183, who says that brothers inherit before sister's son.

[7] Ibid., p. 184.

[8] Sanderson, op. cit., p. 256.

2: Mitchell E-5 (1946-1949) 1956 FT7 Yao FT7

142
291
301
751
643

Frontispiece

PLATE I

CHIEF KAPUNGA THE SIXTH

He wears the traditional necklace of 'lions' claws which are medicated to protect him from the bullets of his enemies.

[facing p. iii]

2: Mitchell E-5 (1946-1949) 1956 FT7 Yao FT7

142
●291

PLATE VI

A typical village headman. He is dressed in white with a cloth thrown across his shoulder. He wears a white cap. This headman is not Government recognized, nor has he the right to wear a scarlet headband. He has no initiation rights.

(November 1946)

[facing p.128]

2: Mitchell E-5 (1946-1949) 1956 FT7 Yao FT7

142
.291

PLATE VII
A lineage elder in Chinjale village, Malawi area.
(August 1949)

[Facing p. 136]

that she is tattooed more profusely on the buttocks and legs. The student of beads was formerly made like waponds with a bark-cloth core, called *ntondo* or *ntuli* (to-wrap, to slip off), referring to the *ntuli* being slipped off over the legs. The fashion now is to wear single strings of beads; each string is of one color but all the strings are different and perhaps number a dozen or more.

Lipondo: a bead belt three-inches wide, worn by Tao women near Lake Nyasa. A bead apron, *Ingiwe*, is also worn by them but not near Ilondo (Pl. VI, fig. 2).

A woman removes her beads when she is "unclean," that is: (a) during the menstrual period, (b) during the period of mourning for a near relative when saliva is forbidden, (c) before the birth of a child and afterwards until such time as she may resume intercourse with her husband.

A large variety of beads has long been used by the Tao. There are some rarely seen now which were much prized in years gone by, while others are of quite recent introduction. There is no evidence that they themselves made beads and there are few which are probably not of European manufacture.

Clothing. The Tao used bark-cloth before the introduction of woven materials. The older people may still be seen in it and it is used in most of the ceremonies. At one time, they also used to weave a cloth called *Ikwamondo* from a native cotton plant. This has been given up since the introduction of imported materials.

For the method of wearing cloth, see Pl. II, fig. 2. The very poorest people wear only a strip of cotton round the pudendum, held in position by a string round the waist hanging long behind and in front; this is called *ndutu*. Tao women, when menstruating, wear under this a little piece of cloth called *Ukwabi*. It is only worn at this time and not always as in certain other tribes.

Warfare. Fighting has naturally played a large part in the life of the Tao as among other African tribes, but at no time were these people a trained fighting race. Warfare was of a desultory character consisting mostly of raids by one healed *chief* upon another. A party of men belonging to a *chief* or *mnyiko* with another, meeting some of his followers would challenge them, "*Ahombe*, who are you for?" The name of the *rival chief* in answer was the sign for battle to begin. A false answer would never be given to gain an advantage. When about to throw a spear, the thrower calls to his adversary.

The Tao have possessed guns for a long time. Going out to fight, the Tao used to hang from one foot to the other, and spin their guns around in their hands. They made their own stocks for the rifles. They also used to make a small, cast-iron cannon about three feet long, called *kombola*, "a little man." It was carried in the arms and was touched off by a torch. Drums called *ungoi* were taken into battle. There is an old war drum at Mukanya's village, taken in 1898 by the old Mukanya from a Mang'anja *chief* called Mkakumbo who lived near Lake Chiuta. Since then, this drum has always gone into battle with Mukanya. Around it his men would dance and anyone who had killed a man in battle would run up to it and spit upon it in admiration.

142
241
301

[illegible]

[End Plate 2]

535
531
●341
301

323
415

857
535

[End Plate 3]

534

241
357

304

[illegible]
304

[illegible]

[illegible]

[illegible]

[illegible]

[End Plate 5]

142
.M1
53

[End Note 2]

N2
291

N2
291
30A

[End Plate 9]

692
N2
291

N2
292

[End Plate 8]

4: Stanner D-5 (ca. 1909)1910 FT7 Yao FT7
Marori FR4
Ngoni FR5
Sonba FR5

M 501 Necklaces, most commonly for children, are made of a number of little square pieces of hippo ivory strung together, ornamented with geometrical designs.

M 789 Medicine is often carried in a little pocket suspended round the neck, or also charms of various kinds. The medicine may be some powdered charred roots or little twigs, leaves, etc., of some tree; these are sometimes now wrapped up in a piece of paper on which is written some extract from the Koran (among Mohammedan Yao); this is then sewn in a little piece of calico and adorned with beads and suspended round the neck with a string.

Y [789] Charms take various forms. Small pieces of wood or, to guard against attack by lion, teeth are worn. Armlets of the same kind are worn against sickness, and others are worn by Angoni, made of beads to which knives are attached. Bracelets of ivory, plaited grass and elephant tail hairs are also worn.

M 501 Metal and wirework bracelets are commonly worn by Angoni, also twisted wire finger rings and rings of lead and ivory. Heavy brass ankle rings and spiral brass leg and arm rings 6 inches and 8 inches wide are worn by some of the women (Ainoge).

M 501 Bracelets cut from the nail of the elephant's foot are worn by Awanda hunters, and little finger rings cut from the nails of the ant-eater are worn as medicine against fever by hunters.

Belts made of twisted copper wire are worn round the waists by Wankonde.

M 502 The use of pigments applied to the body is very limited. I have seen stripes of them, white and red, on the faces of young women, boys and dancers, generally after some ceremony. The significance I do not know. Pigments are now obtained from Indian traders, and I do not know how old the custom is. There is no beautification of face, body, nails, and eyes by pigments. The only application made to the skin is castor oil ground-nut oils to keep it soft—no scents are used.

M [498] Clothing.

M ● Y N Among tribes of Kyamkond the amount of clothing worn varies very considerably from nothing to European garments.

● 291 [555] Of the large majority, however, including Mahenje people, Yao and Angoni, one may speak generally.

The young children commonly run about naked, or have a strip of cloth covering the pudenda, supported by a string round the waist.

M Y N [552] Among the adult population the amount of clothing depends largely on the affluence of the individual, and those who cannot afford much have little clothing. A man wears a strip of calico supported in front and behind by a string round the waist, a woman a piece of calico 18 inches wide reaching from the middle of the thighs to the ankles.

Of the more prosperous, the men wear calico from a little below the knee to the waist, carefully wrapped round the body, and kept in position by some kind of belt; sometimes it is folded across the upper part of the chest or sometimes crossed over in front and two ends tied behind the neck.

Women wear their cloth folded across the upper level of the breasts from right to left. Men and women often have two cloths, one over the loins, only the second fastening over the chest.

A menstruating woman also wears a small piece of calico corresponding to a diaper supported by string round the waist.* The same thing is worn after childbirth for six months. Angoni women always wear them.

The Angoni, Chipeta wear their cloth tape-fashion, carrying a fold of cloth on the left arm. *Ex Angoni* chief wears three cloth, blue, white and coloured, the first outside, the last next to the skin.

The material used is now practically everywhere European-made calico, formerly bark cloth only was used by Nyanja, though weaving had been accomplished by Angoni, where skins were and are used as articles of clothing.

There is nothing to distinguish men of various grades, etc. Fashion at the present time is very capricious—some patterned cloth being much worn one month will have no sale a month later; this is true both of men and of women.

There is no class uniform, and no "costumes" are worn save in dancing (q.v.).

Men are now seen wearing a piece of calico twisted up on the head in turban form, a custom lately introduced from the coast—the only indigenous head-gear is the string skull-cap worn by Angoni widows.

Under the heading of dress must be included the head aprons worn by Tao and Angoni. Among the former the use of this garment is restricted to the women, who in the home sometimes wear nothing else; among the Angoni the children often have them and no other clothing.

Sandals are sometimes made of skin and fastened on the foot with a thong when crossing thorny country.

Among Angoni the wonde only used to be worn; this is a small hard-shelled fruit which was hollowed out and worn just covering the glans penis.

Food, etc.

The staple food throughout the country is either maize or rice, the latter only at various spots on the lake shore where it can be grown. Two food meals per diem are taken, at 9 or 10 a.m. and again at 6 p.m.; each consists of nsima porridge made from maize flour or rice flour or boiled rice with some relish (ndiwo) to which the salt is added. At odd times the native will eat anything that opportunity offers—a piece of manioc root, a boiled sweet potato, a roasted maize cob, etc.

The nsima is made by stirring flour (ufa) into boiling water till a stiff paste is formed; this is kept cooking for five minutes and then scraped out with a wooden

* Diaper or nelson; a woman keeps five or six; they are never put away in baskets but always hung up; a woman changes every time she bathes, using two or three per diem; they may be given to a female child to wear, but are then not worn again by a woman.

2: Mitchell E-5 (1946-1949) 1956 FT7 Yao FT7

in the ritual of the chieftainry more than Newcomers do; provide the chief's councillors; pay rain-levies and in other ways express their closer tie with him. But there is no rigid class structure based on tradition. All villages are liable to break up. If for any reason the village's internal cohesion begins to weaken, its members scatter and it disappears as a political entity. Invader as well as Newcomer villages may thus disintegrate. The smaller sections of an invader village which now set up villages of their own have to compete with the larger and more united villages of Newcomer origin. Another facet of the political process, therefore, is the continual competition of village headmen who are trying to maintain the unity of the villages under them, and to increase their following, so that their status against the chief and the other village headmen may be enhanced. 622 559

Marks of Rank

In the vernacular it is the *name* of the village which is said to be important.[1] This name is usually taken from the founder of the village and is assumed by a new village headman when he succeeds to the position; when a new village is founded the headman gives it his name to distinguish it from the parent village. But the importance that is ascribed to a name is clearly the importance of the corporate group which it represents. The headman is an incumbent of a social status, the prestige of which is drawn from the corporate group which he represents in his public dealings. 103 622 559

The prestige of village headmen is shown particularly in the degree of deference accorded to them by other village headmen. The headman with the highest prestige is of course the chief: the original leader of the Invaders. Below him may be ranked the rest of the village headmen in a relatively fixed pyramidal hierarchy, determined by a number of factors which I shall outline later. 559 622 645

The dress of important headmen is often an indicator of prestige but this criterion is not infallible nowadays when labour migrants, craftsmen and tobacco growers can afford to buy better clothes than many headmen. But it is usually a fairly safe guess that when a man carries a long stick and is dressed in long flowing 292 559 622

[1] *Lina lya hulengwe*—lit. "the name is great".

2: Mitchell E-5 (1946-1949) 1956 FT7 Yao FT7

622 robes (a gown not unlike a woman's dressing-gown), wears a
559 bright-coloured turban, and has one or two men walking behind
292 him, he is a rather important village headman. One particular item of clothing in the Kawinga, Liwonde and Nyambi areas, is the scarlet headband which some village headmen may wear. I shall discuss this later in the context of the competition of village headmen for rank.

Another external characteristic of rank, which seems to have
622 disappeared with the changing economic structure of Nyasaland,
559 was the carrying of knives (*nsinjo*) by important village headmen.
411 Previously, status was indicated by the type and size of knife carried in public. The chief usually carried the largest and most ornate. The knife taken from Kawinga on his surrender in Portuguese East Africa was about 18 inches long and had a decorated ivory handle. Smaller knives of similar pattern belonged to his headmen.[1] Nowadays, many young commoners carry knives two or even three feet long, made from the broken blades of motor-car springs.

The right of important village headmen to build fences[2] at
622 the back of their huts is also a mark of prestige which seems to
559 have lost in significance. About 50 years ago only important
351 headmen had the right to erect a fence at the back of their huts.
[56] This fence, made of tall grass about six feet high, enclosed the grain stores and other food supplies of the household and formed a private compound in which the headman's wife and slaves carried on their daily tasks.[3] It seems likely that private compounds and slavery were positively associated, so that only the important village headmen who had many slaves found it necessary to build fences. All chiefs and most important headmen to-day still erect these fences. Those who hold initiation
[34] rights are obliged to build them because, when the initiands return from the seclusion phase of the initiation ceremony, they are supposed to spend one night in the headman's private compound before going back to their villages. But nowadays, minor village headmen and commoners also frequently build these

[1] See fn. 4, Chap. II, p. 38.

[2] *Lamato*, pl. *malamato*. The enclosed space or 'compound' is *chakondi*. Typical fence compounds are depicted on Plate IX (*a*) and (*b*), facing p. 208.

[3] MacDonald suggests that the common term *bungwe* for woman is derived from the adverb *bungwe*—on the other side (of the fence).

2: Mitchell E-5 (1946-1949) 1956 FT7 Yao FT7

Administrative headmen than either Christian or Pagan. The chiefs, of course, are all Moslem. 162

Lastly, the same trend is seen among those headmen who are of the same tribe as the chief, against those who are of other tribes (Table XIV). Here, however, the difference is so small 621 622

TABLE XIV

PROPORTION OF ADMINISTRATIVE HEADMEN AMONG ALL VILLAGE HEADMEN OF THE SAME TRIBE AS, OR DIFFERENT TRIBES FROM, THE CHIEF IN CHIKWEO, NGOWE, CHAMBA AND MPOSA AREAS

Type of Headman	Same Tribe	Different Tribe	Total
Administrative	85	65	150
Non-Administrative	76	73	149
Total	161	138	299
% Administrative Headmen .	52·8	47·1	50·2

$n = 1$; $\chi^2 = 0.95$; $p = 0.3412$.

that it may easily have arisen by chance. These factors, however, do not operate independently. There are more co-tribesmen, co-religionists and relatives of the chief among the Invaders than among the other categories. In other words, the factors are all intercorrelated and it is possible to consider any particular factor as the independent variable. From the point of view of the people themselves, to be an Invader is to have one of the best claims on the chief to become an Administrative headman.

THE SIGNIFICANCE OF THE SCARLET HEADBAND

Government recognition therefore provides the means whereby headmen are ranked in two major categories. But Administrative village headmen themselves are ranked by a number of prestige-indicating characteristics. The most important of these are the right to wear a plain scarlet headband and the right to hold boys' and girls' initiation ceremonies. 623 557 252

Of these two additional marks of rank the more important is the right to wear the scarlet headband. This headband is wrapped round the head, turban fashion. Most village headmen wear a headband of some sort, either of white or coloured cloth,

2: Mitchell E-5 (1946-1949) 1956 FT7 Yao FT7

GN
554
Z92

while most commoners do not. In Kawinga-Liwonde area, village headmen of high rank are entitled to wear a plain scarlet headband (*ndengeli*). One informant suggested to me that the plain scarlet stands for blood, i.e. it indicates one of the most important elements in rank to-day—warrior ancestry. I do not know that this opinion is well supported. Among the 424 village headmen I enquired about, 24 or 5·7 per cent were entitled to this mark of honour. Of these, three were Aboriginal Nyanja headmen, 17 were Invaders, and only four were Newcomers. Of the four Newcomers, one had the right to hold it before he had come to the area from Portuguese East Africa and that was before the White conquest; one living in Chamba's area had brought it from Liwonde's area where he had been given the right to wear it; and the other two were in Chikweo's area and were given the right by the present Chikweo. The three Aborigines who wear the scarlet headbands are Kutumbu in Kawinga's area, and Mbeta and Mbande in Mpona's area. All three are settled around the shores of Lake Shirwa and they are said to have been the original Nyanja chiefs in this area when the Yao invaded. These chiefs also have boys' and girls' initiation rights. The rank they held in their own tribal communities is recognized by the Yao, who in any case ascribe superior status to the first-comers into an area. With the Nyanja chiefs the position became ambiguous. They had superior rank in that they were in occupation of the land before the Yao moved in. At the same time when they subjugated themselves to the Yao they accepted servility. Nowadays, the Nyanja are well integrated into the political life of the area and carry on their existence along the lake shores, still going to their traditional chief for the settlement of most of the cases not involving heavy compensation.

All Invader chieftains have scarlet headbands. Some of their direct relatives such as Sowa, their clan relatives such as Nunuma and Mapondo, or their patrilateral relatives such as Cibwana Liwonde, the son of the first Liwonde, also have them. After these the next important group who are entitled to wear them are the *ndunas*. Examples are Kangombo, Masinde and Ciodumba in Kawinga's area and Makata in Ngokwe area. The *ndunas* are village headmen, usually unrelated to the chief, but who have been long associated with him, and who are his

2: Mitchell E-5 (1946-1949) 1956 FT7 Yao FT7

councillors. Long ago they held a most important position within the chiefdom. They were the loyal headmen and intimates of the chief, who could therefore be entrusted with the government of outer areas. They were posted to various parts of the chiefdom; kept the chief advised of war and attacks; maintained the peace among the village headmen in their areas; and collected the ivory to which the chief was entitled and sent it to him. Nowadays, the *ndonas* find themselves in competition with other officials who have arisen from the White Administrative system. The chief also finds advisers and councillors in his court clerks and his court sergeants, but the *ndonas* still have much prestige and advise and assist the chief in his administration of the area. Earlier, I mentioned that a senior headman was allowed to have a mat to himself, and only his own friends and people of his rank could occupy it with him. The only people in the chiefdom who could share the chief's mat, were the *ndonas*, and they called him *ungonga* (my friend). Because the *ndonas* were not related to the chief they were in the peculiar position of being able to settle quarrels between the chief and his family: they were the arbitrators in arguments between the chief and his 'younger brothers' (junior male matrilineal relatives), or the chief and his wives. By Yao custom, rank is inherited by a village headman's successor, so that the relationship between the chief and his *ndonas* is perpetuated through successive incumbents. In Kawinga's area, for example, the *ndonas* to-day have the same name and the same relationship and relative position with regard to the chief as the *ndonas* who invaded the country nearly 100 years ago. This traditional ranking of village headmen emerges as soon as the Government alters its policy. Recently, when the idea of group headmen was reintroduced, the chief nominated the *ndonas* to become group headmen—a position not unlike that they held before the White conquest.

There is considerable difference between the size of Administrative villages under those headmen who have the right to wear the scarlet headband and those who have not. Table XV shows this clearly. The mean number of tax-payers under the former headmen is 80, while under the latter it is only 38. Among the village headmen with the right to wear the scarlet headband 62·5 per cent had villages of more than 60 tax-payers, while among other headmen only 23·0 per cent of the villages were in

2: Mitchell E-5 (1946-1949) 1956 FT7 Yao FT7

TABLE XV

SIZE OF ADMINISTRATIVE VILLAGE UNDER HEADMEN WITH SCARLET HEADBANDS AND UNDER WITHOUT

G22
S54
2F2

No. of Tax-payers	Without Scarlet Headband	With Scarlet Headband	Total	% Headmen with S.H.
Under 40	103	7	110	3·9
40-79	123	7	130	5·3
80-119	83	3	86	3·5
120-159	6	2	8	25·0
160 and over	7	3	10	42·7
Total	386	24	410*	5·9

Combining villages of more than 80 tax-payers.

$n = 1$; $\chi^2 = 24·56$; $p < 0·0001$.

* Excludes 4 villages in which the number of tax-payers were unknown.

this category.[1] The village headmen who are entitled to wear the scarlet headband are mainly invaders and people of high rank. Their villages are large because of their rank as well as vice versa.

I have never heard of a village headman's wearing a scarlet headband without the chief's permission, and I am not sure what sanctions the chief would apply to prevent it. I have heard men say that village headmen who are not entitled to wear it do so if they live far away, but take it off when they come near the chief's court. However, this was only in casual conversation and I did not have an opportunity to check it. From the point of view of the people the right is so bound up with traditional status that it is almost inconceivable that the custom should be flouted. As we have seen, among the Newcomers only two have been given the right within the last 30 years.

Yet the significance of the scarlet headband differs considerably from area to area. In Malonia and in Jalasi area the custom seems either to have fallen away or never to have existed. In Jalasi area Islam may have some effect. In Malonia area the majority are Christians and most headmen have taken to

[1] Diff. of per cent = 3·75; S.E. of diff. = 0·77; C.R. = 3·83; $p = 0·0001$.

2: Mitchell E-5 (1946-1949) 1956 FT7 Yao FT7

European-type clothing. In Nyambi area, shooting on Kawinga-Liwonde area in the north, there are 11 Administrative village headmen out of 37 who are entitled to the scarlet headband (21 per cent). For the Kawinga-Liwonde area the percentage is 37. An informant explained why a large proportion of headmen in Nyambi area had the right to wear the headband: 'The old Nyambi and the present one do not care. If a man has many hats, and if he says that his uncle had a scarlet headband, then he is given one too.' Even within the Kawinga-Liwonde area there is some variation in the number of headmen who are entitled to the scarlet headband. The following table sets this out.

Chieftaincy	Total Admin. Headmen	% Scarlet Headbands
Kawinga	160	37
Liwonde	114	48
Mpeta	30	100
Chikowo	48	84
Ngokwe	21	142
Chimbu	60	69

Mpeta area near Lake Chirwa shows such a high proportion because of the Nyanja ex-chiefs who are entitled to the scarlet headband. Chikowo and Ngokwe on the other hand are the Mpondo chiefs and seem to have taken the same attitude as Nyambi and his predecessors. In contrast to the statement about Nyambi, one Administrative headman in Mpeta's area said: 'The chief's scarlet band is good enough for us all. If each had one it would be too gaudy!'

The Struggle for Initiation Rights

Village headmen are generally outside competition for the right to wear the scarlet headband. These rights have been established largely by ancient custom and are almost confined to the founders or to those who have had them before they came into the area. The competition for initiation rights, however, goes on steadily. H. L. Duff had noticed this as early as 1906.[1] Newcomers may approach the chief and agitate for the rights,

[1] See p. 81.

2: Mitchell K-5 (1946-1949) 1956 FT7 Yao FT7

622. The right to hold initiation ceremonies may be held con-
554 currently with the right to wear a scarlet headband. For
881 purposes of analysis thus far, I have treated the holding of
292. initiation ceremonies separately. By common consensus, the wearing of this headband is an indicator of much greater rank than the holding of initiation ceremonies. The highest ranking headmen, like the chiefs, usually have the right to wear the scarlet headband together with the rights to both initiation ceremonies. In order to show how rank varies among the main categories of village headmen I have devised a numerical

TABLE XXIII

MEANS OF RANK AMONG ADMINISTRATIVE VILLAGE HEADMEN

Type of Headman	With Headband				Without Headband				Total
	Both	Boys only	Girls only	No rights	Both	Boys only	Girls only	No rights	
Aborigines:									
Direct rel.	—	—	—	—	—	—	—	3	3
Clan rel.	1	—	—	—	—	—	—	1	2
No rel. .	9	—	—	—	—	1	1	13	27
Total .	1	—	—	—	—	1	1	16	32
Immigrants:									
Direct rel.	8	1	—	—	1	2	1	26	47
Clan rel.	4	—	—	—	8	2	1	23	44
No rel. .	3	—	—	1	4	2	2	23	45
Total .	15	1	—	1	17	6	10	84	136
Newcomers:									
Direct rel.	2	—	—	—	2	1	3	13	21
Clan rel.	—	1	1	—	3	1	12	25	43
No rel. .	1	—	—	1	9	8	14	180	213
Total .	1	1	1	1	14	10	31	198	257
Grand total	19	2	1	2	31	17	42	298	414

2: Mitchell E-5 (1946-1949) 1956 FT7 Yao FT7

system of ranking. I have assumed that the rarer the mark of rank the higher the rank it indicates. Table XXIII sets out the incidence of marks of rank among the 414 Administrative village headmen for whom I have recorded the data. In all, there were 24 headmen with scarlet headbands, 69 with boys' initiation ceremonies and 95 with girls' initiation ceremonies. I have given the holding of a scarlet headband the value of the reciprocal of the proportion of village headmen who hold that right, i.e. 414/24 = 17·3.

The value of holding a boys' initiation ceremony by the same procedure is: 414/69 = 6·0.

The value of holding a girls' initiation ceremony is: 414/95 = 4·4.

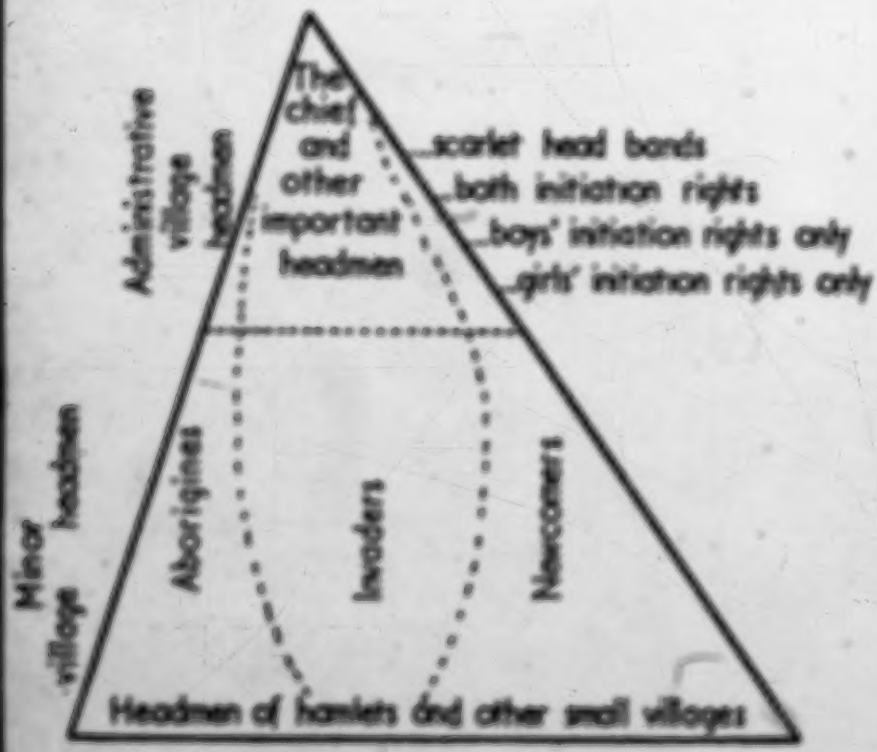

DIAGRAM 2. PARADIGM OF THE POLITICAL STRUCTURE.

622 The value of holding the various combinations of rights then
SSV are these:
EE
282

Senior headman and both initiation ceremonies	= 277
Senior headman and boys' initiation ceremony	= 253
Senior headman and girls' initiation ceremony	= 217
Senior headman alone	= 173
Both initiation ceremonies	= 104
Boys' initiation ceremony only	= 80
Girls' initiation ceremony only	= 44

We may now alter the rank of headmen within any particular category by estimating the percentage score from a possible. For example, the score of the rank among Aboriginal headmen would be:

1 × 277 = 277
1 × 80 = 80
1 × 44 = 44
277 (expressed as a percentage of 11 × 277 = 161)

622 Using this method I have set out in Table XXIV the rank
SSV scores for headmen in the categories in Table XXIII. Table XXIV shows that on the whole ranking among the lowder

TABLE XXIV

RANK SCORES FOR ADMINISTRATIVE VILLAGE HEADMEN OF DOMINANT CATEGORIES

Aboriginal:		
Chief's direct relatives	0	
Chief's clan relatives	300	
Chief's non-relatives	140	
All Aboriginals		161
Lowder:		
Chief's direct relatives	274	
Chief's clan relatives	187	
Chief's non-relatives	131	
All lowder headmen		191
Newcomer:		
Chief's direct relatives	84	
Chief's clan relatives	173	
Chief's non-relatives	46	
All Newcomer headmen		81
All chief's direct relatives		194
All chief's clan relatives		178
All chief's non-relatives		84

Z: Mitchell E-5 (1946-1949) 1956 F'77 Tao F'77

G22
.G52
516

PLATE V

Village headman, Nyongo, at his installation ceremony. He is not entitled to wear a scarlet headband but wears a coloured one instead. On his right are his sons, on his left his wives, adopting the posture correct for an inferior—head lowered, eyes downcast, hands in the lap. A villager is dropping a penny into the cloth at the headman's feet while the headman's representative collects the pennies.

(July 1947)

[facing p. 114]

I: Dwamow D-5 (ca. 1912) 1932 FT7 Tan FT7

some sweetbow into a big gourd. These his assistants will carry away, together with a hoe, to *Lepondo*, whither the *w'mitbila* now goes to remain while brewing goes on for four days. 881 273

During their stay at *Lepondo*, the *w'mitbila* and his assistants live on flour and chickens begged from the mothers of the unit. On the first day nothing is done; on the second day they begin making the *Jepuge* or figures in relief of animals, etc., to be described later; *Kwenepend* is made this day. On the third day the other figures are made and on the fourth day *ching'ombong'ombo*. Into the ground where *ching'ombong'ombo* is made, some of the strong beer, known as *ngenge*, which is added to the flour and water mixture on the fourth day as signified by *ba-kalpula*, is poured by the *w'mitbila*.

When the work at *Lepondo* is finished, the *w'mitbila* carrying his "tail" leads his assistants wearing their leather headdresses back to the chief's village singing:

"*Dingolele* *ahene* *kenge* *ahalpile* *ba* *ewet*, *dilinge* *ahenend* [533
"I went go and see beer perhaps they have mixed at the village, sometimes oh dear! 534]
Ohilende *ahenejiwi* *ngelje* *ewe* *ningwende* *mbe*"
The going out of a day or two ago. If I had not taken tobacco I would have died of hunger!"

Arriving at the village where the brewing is going on, the *w'mitbila* takes a cup and putting his "tails" on the ground, he dips into the pot of beer belonging to the leader's mother, pours some on his "tail," and then drinks some. Then he puts more into a gourd, together with some medicine, and going up to the chief who sits in his verandah overlooking the brewing place, he kneels, and first drinking a little himself, he presents the drinking gourd of beer to the chief who drinks and then returns the cup to the *w'mitbila* who finishes it. Picking up his "tail," he then goes straight back to *Lepondo* while his assistants with some men nominated by the chief go round showing pots of beer in turn. The assistants choose by striking a pot with a medicine-tail. These pots of beer are then put aside to cool, while moderate drinking begins in the chief's house. This takes place in the morning of the day on which the unit will return from *Nilapalo* to *Lepondo*, and in the afternoon, the people from the villages will go out to *Lepondo* to take part in the return. The return is made about sunset.

The unit at *Nilapalo* are put into their shelters and the doorways barricaded. At sunset or just after, the place is set on fire and the unit have to change their way through the back of the shelters. They then form in line, wearing a slip of bark cloth round their loins and over this, a kind of kilt called *mapijanwe* if made of frilled-out bark-cloth, or *mojenge* if made of palm leaves. Accompanied by the element, they proceed towards *Lepondo*, each carrying a stick of smouldering wood and an unlit bowls of bark-cloth. 881 [342]

The burning of the hole at *Nilapalo* has been the sign to the *w'mitbila* that the unit have left; he puts round his waist a bark cloth belt, *chombo*, and a cotton sash round his chest with the ends hanging down behind and on his head he wears the *Kenge* headdress made of the feathers of *ahenge*, the widow-bird. In each hand he carries the tail of gnu or zebra, held right end up, with the hollow end filled with "medicine." Thus arrayed, he goes out 881 533 534

3:Stanner D-5 (ca. 1912) 1922 FT7 Yao FT7

The *wali* then remain for about a month under the care of their guardians, during which time they receive most valuable instruction as to their behaviour to others, especially to their elders and to members of the opposite sex. Their faults are brought home to them and many little pieces of advice given. They are taught the household duties which will be their lot thenceforth and they are forewarned of approaching puberty and what it means to them. [88]

During this period their child-names are not used and until their new names are assigned to them, they are called after birds and animals, generally some of the smaller animals, e.g. *Anyingalwe* (*mpingalwe* = the shrew rat), *Alitawale* (*limwale* = a big species of rat), *Analyelye* (*nyelyelye* = the shrew). I have been unable to ascertain whether these have any totemistic significance. [551]

The girls are usually given a fright to impress on them the danger of lions; one night an imitation of a lion approaching their enclosure is made when all is dark; then all of a sudden one of the *chewani* around with big thorns instead of claws will spring upon one of the girls, generally picking out the worst behaved.

When the term of instruction is completed, they again adjourn to *Chiputa* for two days where *Unyago* is danced on the first night by women, on the second night by men. The first day is spent by a party of men and women in the bush, preparing figures of animals and their dress for the dance. The women wear a small garment of bark-cloth called *nandagwiele*, a word which literally means "buttocks of a frog" but which is used with the meaning of trousers and refers in this case to the fact that the bark-cloth is sewn round the upper part of each thigh into a garment like a pair of knickerbockers. Round the abdomen and chest are worn bands made of short pieces of small, decorticated millet stalks; similar bands are worn on the legs and arms, two on each thigh, two on the leg, one at the wrist, below the elbow, and one round the upper arm. In the dark these give the body the appearance of being painted in alternate bands of black and white. They also wear a headdress of the same material. [292] [301]

On the first evening of the return to *Chiputa*, this party of women appears after dark; they dance in a row, advancing and retiring in step, swinging their arms and moving their bodies to ejaculations of *Bi-di! Bi-di!* Other women dress up as men, wearing long beards made of *likanga*, a kind of fibre plant.

The second night, the representations of animals made of grass and bamboo framework supported by men appear, the elephant, the rhinoceros, and various antelopes being the commoner figures, also the zebra made of painted bark cloth. These animal figures are similar to the *singwe* or *singwe* of the *Anyanja* and to those of the *Awisa*,[1] but the *nyakhwa* is unknown among the Yao. [171]

During all these presentations at *Chiputa*, the *wali* seated on mats are the chief spectators and are duly frightened by the performances of the last two days.

[1] Stanner, 'Notes on some tribes of British Central Africa,' op. cit., p. 288.

to the rear of girls, singing, "*Amandwala ukandwi*" *mihlola*, "*Magandwi*" (he-goats, to girls). Leaving the pole at the girls' feet, they retreat, after which the girls take it up and advance to the boys in the same way. 535 857

Ohlolo is danced rather like *ukomanda*. A group of men dances go round in a circle, and within this circle may be a line of women dancing to the same time but with rather different steps than the men. This I have seen danced by a trained band of dancers, but *ohlolo* pals in. A man may lead a woman into the middle and embrace her. There is a tendency among these trained dancers to freshen the old time stately embrace for something which is not so unobjectionable. 536

Lidzipi is a new dance, but one that is well-liked. The drums are as in *ukomanda*. Men, women, and young people dance in a circle followed by entry into the middle, and *he-goatis*.

Mlomulo is danced by men on one side and women on the other side of a circle, to drums *ukomo*, *mlinda* and *mangulo*. Any of them may dance out into the middle after going round in a circle.

Lipupu is an old dance for the elder men and women. Like *ukomanda*, the steps are slower and are characterized by side-to-side movements.

Mlolongo: drums, *libati*, *shingwenje*, and a wooden drum called *mlilibo*, because it is so played as to give the sound "*mlilibo!*" It is danced by men in a crowd. While the feet do little, shuffling steps, the buttocks are jerked out backwards and forwards.

Chawlomali: a dance of recent introduction resembles *ulidi*.[1]

There are three dances which are danced by special dancers.

M'ongiwe: the name on the *ulumbo* of the *Amayaiza*,[2] generally danced by four men who wear a kind of kilt made of strips of palm-leaf, and rattles, *mamen*, on their legs. They may also wear the *lingwe*, a headdress made of the tail-feathers, *wepu*, of the *shingwe* bird: it is like a broad hat-band without a crown, the feathers projecting radially. The *ulumbo*, a piece of a shell which comes from the Zululand coast is also often worn (Pl. III, fig. 3). The drums which give the time are *shimizingo*, played very rapidly indeed. The steps are incredibly fast, with greater excursions than in the other dances, and usually end up with a jump into the air and a pose with gesticulating. A circle is formed round them by the young people who, in the interval, walk round singing and clapping. The dancers may call out any girl for the embrace. [292]

Mwanje: danced by two or three pairs of men who wear the palm-leaf kilt, *mamen*, and a broad, bark-cloth belt called *ulumbo*. When the drums start, these dancers walk round the circle of onlookers, and get the song going, and the clapping to time; then with a signal to the drummers, they start dancing alternately an extremely rapid dance with rattles in the hands, *mwanje*, and a kind of dance-do-wrong, *ulumbo*. The drums employed are *mlinda*, *mlipulipu*, and *shimizingo*. The rapid dancing is too exhausting to last more than a few minutes. This is always danced at *Lupondo*. [292]

[1] Cf. Swanson, "Notes on some tribes of British Central Africa," op. cit., p. 204. [2] Said.

192
292
559
301
516

[End Plate 1]

stream, sprinkles the boy on the chest with the water. Then the positions are reversed and the women receives the "tail" on her chest, after which they plunge into the water and bathe, each pouring water over the other. The women rubs the boy's back and he in turn slyly rubs the back of his women guardian. Clothes are not removed. Everyone bathes so.

While this is going on, the o'ximiddo and his assistants build a kind of fence across the return road; as the people start back, he sings:

"Ehde-ewapo ehewaso ewapapo ewahwahe-ewaehe"
"Then my they are buying I myself they give me the spirits!"

that is "everyone has got to buy from me the gifts I myself have from the spirits." As each woman comes up carrying her mouth, the mother runs out and makes a payment to the o'ximiddo so that her son may be allowed to pass. The boys are carried back to the shelters where they rest. The mother of the leader cooks food into which the o'ximiddo puts medicine; he then gives some to each mouth to eat, after which they partake of the food prepared by their mothers, while the o'ximiddo goes to the village for the beer drinking, returning in the afternoon. In the interval the dancing goes down shields, etc.

Old shielding in separate bundles on the ground has previously been prepared for anointing the mouth. The o'ximiddo takes each bundle and passes it across the palm of his hand on which he has smeared medicine, each bundle being set down on the ground again. Taking a stick, he smears it with medicine from his "tail," and he dips it into each bundle. He then smears with his "tail" to detect any women who may have had any sexual intercourse instead of remaining continent during the stay at Ndapada. He dips his "tail" into each bottle of oil to turn and bottle it up for the oil to run off. If the oil runs off in a stream, the mother or she stands behind her bottle of oil is welcomed as a good mother; if the oil runs off drop by drop, "ehdi," the woman is laughed to scorn. Her bottle is changed for that of another woman, or her oil is thrown away and some from another bottle is put in its place so that no harm shall result to the boy.

The elements then take the boys into the bush near by. The mapajoetse dress is removed, the body anointed with the oil, and fresh bark-cloth dyed black is put on. Little bows and arrows are made of small branches and grass and with these the well shoot as they again enter Lapanda, putting the bows down on sing'ombong'ombo to the trilling of all the women present.

Immediately after this, the return is made to the village, just after sunset, the women having been busy gathering up all their belongings, while the boys were being anointed.

Some of the assistants lead the procession, the rest following in single file, all round [illegible] and walking very slowly, dressed in the new bark-cloth round the loins, with many ropes of beads round the neck and body, a headband of bark, and down the back a string of beads to which is attached a tassel. Each carries in his hand a wand about five feet long, sponge, with a pointers bound in the shaft and two rattles, women, affixed at the upper end.

1: Tow E-4 (no date) 1950 P77 Yao P77

[195] All these peoples have in common the following points of social organization: matrilineal clans, matrilocal marriage, residence in small villages under independent chiefs or headmen. They have elaborate initiation schools with circumcision for boys, and initiation without an operation for girls. It is mainly by variations in the initiation rites that their cultures can be distinguished from one another. They also distinguish themselves by linguistic variations and by cicatrizations. This is the region of the *pelele*, or lip-ring, although Yao do not wear it.

[196]

THE YAO

TRIBAL AND SUB-TRIBAL GROUPINGS AND DEMOGRAPHY

NOMENCLATURE

[19] The name of the tribe is spelt and pronounced in a variety of different ways: Yao, Ayo, Yeiao, Hiao, Wahiao, Wahaiao, Wahyao, Ayowa, Myao, Achawo, Wajao, Adjao, Mujoa, Majaoua, Achawa, Adjoa, Mudaoo. Sometimes they are referred to by the name of one of the sections of the tribe or of one of the leaders: e.g. Amachinga, Amangoche, Mamaninga (also spelt Amamaninga and Amamaninga), Chiwala, Katulo, Kalanje, Mdenda.[1]

ORIGINS

[18] [31] [69] The Yao claim a hill called Yao, near Mumbo, between the Rivers Lujenda and Luchilingo, as the original centre from which they dispersed. The main body of Yao is in Portuguese East Africa, and there are large settlements in Tanganyika and Nyasaland.

(a) *Portuguese East Africa.* The two main divisions of Yao in Portuguese East Africa are around Mumbo and around Mtarika, on the Lujenda river.[2] Immediately south of the lower Ruvuma and at its mouth there are two smaller groups. The Yao occupy most of the territory between the Mainje, Luchilingo, and Ruvuma rivers in their upper courses.[3]

(b) *Tanganyika.* Yao entered Tanganyika Territory at two separate periods. In the 1890's they immigrated into Masasi, Chiwata, Newala, Tunduru districts and around Mikindani and Kyungo.[4] The other two groups are more recent comers: one (about 3,000), were taken as war-captives by the Ngoni in Songea district; the other (about 45,000), in the upper Lukuledi valley in Lindi district. They came in from Portuguese East Africa about 1912.[5]

(c) *Nyasaland.* There are four main groups of Yao:

(i) The largest group lives in the Southern Province, in upper Shire, and south Nyasa districts.

(ii) The second is near Blantyre, Chiradzulu, Zomba.

(iii) A small group is settled in a belt on the west coast of Lake Nyasa at Dunira Bay.[6]

[1] Hetherwick, 1933, p. 7 n.; Hetherwick, 3, 1900, p. xviii; Abdallah, 1919; Burton, 1873, p. 81 n.
[2] *Handbook of Nyasa Co.*, 1898, p. 20.
[3] Johnson, W. P., 3, 1893.
[4] Weule, 1, 1909, p. 140.
[5] *Handbook of German East Africa*, pp. 56, 62.
[6] Murray, 1932, p. 246; Lewis, 1934, p. 37; Hetherwick, 4, 1907, p. 185.

performed these services used to enter a special relationship of privileged familiarity with the village of the dead. This has died out in Nyasaland, but accounts of Unei[1] among the Yao at Masasi and Songea suggest that something of the kind is still practised.

Chiefs and headmen are not buried outside the village, as are other persons. They used to be buried before their own huts, but now in the centre of the village. Shrines were raised over their graves, at which offerings of beer and flour were made. If the village was moved the pot of beer sunk into the ground at the chief's grave was also removed and reinstated at the new site. A dead slave was buried by his fellow slaves; normal rights of sepulture were denied to suicides and to persons who had died in taking the poison ordeal (that is, convicted witches).[2]

OTHER DISTINCTIVE CULTURAL FEATURES

The Yao have a tribal mark of two short cuts on each side of the face between the eye and the ear.[3] Their women did not wear the *pelele*, lip-ring, although their neighbours the Makua and Makonde did;[4] the fashion seems to have spread to south Nyasa in the 18th's, as many travellers commented on it, without distinguishing whether the wearers were Yao, Nyanja, or Lomwe.[5] The women used to pierce the left *ala* nasi and insert a metal or bead stud, *cipini*.[6]

MAKUA-LOMWE

TRIBAL AND SUB-TRIBAL GROUPINGS AND DEMOGRAPHY

Nomenclature

The *Ma-* in *Makua* is not a prefix, but part of the name. Variant spellings are *Mokua*, *Makua*, *Makoua*. They are sometimes referred to by the name of one subdivision, the Medo Makua, and called *Amatu ne Mata*.[7]

The *Lomwe* (also spelt *Lomwi*) are called *Alolo* by the Yao, and are also frequently called *Angoro* (*Ngoro*) which is an old name for the people of the region.[8] Any of the Makua-Lomwe peoples who have migrated into south Nyasaland are collectively termed *Ngoro* in official reports; Ngoro is a hill in the region of Portuguese East Africa, whence they came, but they should not be confused with the Ngoro of Tanganyika.[9] Another name for them is *Acilomo*.[10] *Alolo* is incorrectly applied to all the Lomwe; it has a stricter application to the Cuabo from Quilimane.

[1] Rattray, 1927; Murray, 1940; Spire, 1945.
[2] Main sources for burial are: Johnston, J., 1901, pp. 28-30; Stannus, A., 1910, pp. 140-6; Abdallah, 1919, pp. 19-21; Duff, 1903, pp. 320-4; Macdonald, 1882, vol. I, pp. 109-10.
[3] Murray, 1939, p. 133.
[4] Thompson, 1885, pp. 35-8, writing of the Yao of the Ruvuma valley.
[5] Macdonald, 1882, vol. I, pp. 16-17; 'several Mangoro hardly any women is without it'.
[6] Stannus, A., 1910, p. 308.
[7] *Handbook of Portuguese Nyasaland*, 1921, p. 36; Murray, 1940, p. 56; Weule, I., 1909, p. 235; Livingstone, 1874, p. 30.
[8] Theal, 1896, pp. 413-17; Cooper Burton passed through Mangoro country. Burton, 1873 (Lacerda's Journey, 1798), mentions Mangoro.
[9] Abraham, 1951, p. 13; Murray, 1940, p. 46.
[10] Johnston, W. F., c. 1894.

2: Mitchell E-5 (1946-1949) 1956 FT7 Tao FT7

142
291
301
751
693

Frontispiece

PLATE I

CHIEF KAWINGA THE SIXTH

He wears the traditional necklace of lions' claws which are medicated to protect him from the bullets of his enemies.

[facing p. iii]

[illegible], sprinkles the boy on the chest with the water. Then the positions are reversed and the women sandwiches the " tail " on her chest, after which they plunge into the water and bathe, each pouring water over the other. The women rubs the boy's back and he in turn duly rubs the back of his women guardian. Clothes are not removed. Everyone bathes on.

While this is going on, the o'mitsiko and his assistants build a kind of fence across the return road, on the people must back, he sings:

"[illegible] [illegible] [illegible] [illegible]"
"Pim my they are buying I myself they give me the spirits!"

That is " everyone has got to buy from me the gifts I myself have from the spirits." As each woman nears my carrying her wand, the mother rises out and makes a payment to the o'mitsiko so that her son may be allowed to pass. The boys are carried back to the shelters where they rest. The mother of the leader makes food into which the o'mitsiko puts medicine; he then gives some to each wand to eat, after which they partake of the food prepared by their mothers, while the o'mitsiko goes to the village for the beer-drinking, returning in the afternoon. In the interval the dancing now dances shambs, etc.

Oil standing in separate basins on the ground has previously been prepared for anointing the rank. The o'mitsiko takes each basin and passes it across the palm of his hand on which he has smeared medicine, each basin being set down on the ground again. Taking a stick, he smears it with medicine from his " tail," and he dips it into each basin. He then moves with his "tail" to detect any women who may have had any sexual intercourse instead of remaining continent during the stay at Ndagala. He dips his " tail " into each basin of oil in turn and holds it up for the oil to run off. If the oil runs off in a stream, the mother or the stands behind her basin of oil is welcomed as a good mother; if the oil runs off drop by drop, " adah," the woman is laughed to scorn. Her basin is changed for that of another woman or her oil is thrown away and some from another basin is put in the place so that no harm shall result to the boy.

The elements then take the boys into the bush near by. The magajeria dress is removed, the body anointed with the oil, and fresh bark-cloth is dyed black is put on. Little bows and arrows are made of small branches and grass and with these the well shoot as they again enter Lugundu, putting the bows down on sling'looking'sticks to the trilling of all the women present.

Immediately after this, the return is made to the village, just after sunset, the women having long-long gathering up all their belongings, while the boys were being anointed.

Some of the assistants lead the procession, the rank following in single file, all naked and walking very slowly, dressed in the new bark-cloth round the loins, with many ropes of beads round the neck and body, a headband of bark, and down the back a string of beads to which is attached a tassel. Each carries in his hand a wand about five feet long, sponge, with a pattern burned in the shaft and two rattles, women, affixed at the upper end.

The well-born women for about a month under the care of their guardians, during which time they receive most valuable instruction as to their behaviour to others, especially to their elders and to members of the opposite sex. Their faults are brought home to them and many little pieces of advice given. They are taught the household duties which will be their lot thenceforth and they are instructed of approaching puberty and what it means to them. [58]

During this period their child-names are not used and until their new names are assigned to them, they are called after birds and animals, generally some of the smaller animals, e.g. Ancylogaster (ngangalee = the shore eel), Ailurosis (Omonde = a big species of eel), Amelyelyn (ngalyelye = the shore). I have been unable to ascertain whether these have any intimate significance. [55]

The girls are usually given a night to improve on them the danger of lions; one night an imitation of a lion approaching their enclosure is made when all is dark; then all of a sudden one of the element armed with big thorns instead of claws will spring upon one of the girls, generally picking out the worst behaved.

When the term of instruction is completed, they again adjourn to Chiputo for two days where Ungaga is danced on the first night by women, on the second night by men. The first day is spent by a party of men and women in the bush, preparing figures of animals and their dress for the dance. The women wear a small garment of bark-cloth called omulogatele, a word which literally means "instinctive of a frog" but which is used with the meaning of trousers and refers in this case to the fact that the bark-cloth is sewn round the upper part of each thigh into a garment like a pair of knickerbockers. Round the abdomen and chest are worn bands made of short pieces of small, decorticated millet stalks; similar bands are worn on the legs and arms, two on each thigh, two on the leg, one at the wrist, below the elbow, and one round the upper arm. In the dark these give the body the appearance of being painted in alternate bands of black and white. They also wear a headdress of the same material. [292] [30]

On the first evening of the return to Chiputo, this party of women appears after dark; they dance in a row, advancing and retiring in step, swinging their arms and moving their bodies to ordinations of *Ba-ki! Ba-ki!* Other women dress up as men, wearing long beards made of Kisuga, a kind of fibre plant.

The second night, the representations of animals made of grass and bamboo framework supported by men appear, the elephant, the rhinoceros, and various antelopes being the common figures, also the zebra made of painted bark cloth. These animal figures are similar to the shapes or shapes of the Anjwaja and to those of the Avian,[1] but the zebra is unknown among the Tao. [171]

During all these ceremonies at Chiputo, the well seated on mats are the chief spectators and are duly frightened by the performances of the last two days.

[1] Beaver, 'Notes on some tribes of British Central Africa,' op. cit., p. 386.

The hair of the axilla is always removed in men and women, usually by shaving but 302
sometimes in the case of women it is dealt with as in the case of the pubic hair. A man
with underarm axillae would be laughed at and referred to as "a man carrying a fowl in
his armpit." The axillary hairs are called *mandanga* or *mangangar* (*ngangar*, the armpit).

The pubic hair, *mandanga*, is removed by both men and women; in men by shaving, in
women sometimes by shaving, but probably by plucking out after the application of a
medicine called *mamandanga* (*ba-mam*, to pluck a fowl), which renders the operation [§29]
easy. It is prepared from the juice which exudes from the bruised bark of the *mam-mandanga*
tree. There is a woman at Malanyu's who has never grown any axillary or pubic hair;
she is called "the *ngam* elephant"; a *ngam* elephant has no tusks. It may be noted
in passing that the woman has borne children.

A few men have the hair round the anus shaved. Such a service can only be asked of [§30]
a man's closest intimate, such as a brother-in-law.

I have dealt with tattooing among the Tao in an article, as yet unpublished, on tattooing
among the natives of Hyandano.

The teeth among the Tao proper are never mutilated in any way, though the Amam- 304
gudu go in for small file marks at the cutting edge of the incisors.

The old Tao women, of whom none may still be seen, used to pierce the upper lip and 305
wear a circular disc of wood often two inches in diameter in the hole; this is called *kapidu* 306
(Pl. VII, fig. 4). The disc was often made of lead and sometimes of ivory. The lead might
be hollowed out on the upper surface; it was then called *kapidu ka ulidi*. The disc caused
a considerable projection of the upper lip which was much admired. A man, on the other [§32]
hand, with protruding lips would be nicknamed "the warthog," *nanangulu*, and con-
sidered ill-bred.

This *kapidu* fashion has gone out and of later years the *shipini* or disc worn in the
left ala of the nose has become more and more fashionable (Pl. II, fig. 2). Originally the
shipini consisted of a small disc of lead not larger than a three-penny piece, which lay on
the outer surface of the ala, held in place by a stem, *kubinji*, which pierced the ala and
passed into the nostril. Now the fashion is to wear a very large disc, often an inch in diame-
ter, which itself occupies a hole in the substance of the ala of the nose; it may be flat-
topped and called *shipini sha ulanga* ("mushroom"), or the upper surface may often be
concave, in which case it is called *shipini sha ulidi* (*lidi*, a grain mortar). These discs
are made of lead and are sometimes called *kibini*, a recent word and doubtless a corruption
of "lead." Others are made of ivory, which may bear some geometric pattern on the exposed
surface. A *shipini* used to cost a fowl.

Among Tao men and women, the lobule of the ear is often pierced but nothing is worn
in the hole except possibly a stalk of grass.

Combs for use and for ornament are worn in the hair by both men and women. The 307
ordinary comb without decoration is called *Kiwandapa*; it is made of a number of pieces

of bamboo fastened together at one end on the flat side by binding with string, the free ends being sharpened to form the teeth of the comb. If the fastened end is ornamented with beads sewed on in patterns, the comb is called *lisemale* (*lu-semale*, to comb). *Lisemale* is distinguishable from *lusyandwa*, to be sticky, in the name of a small comb worn purely for ornament. On either side of the base of this comb, pieces of wood variously shaped are glued with the sticky juice from the root of the *shingandwa* tree. In this way, a sort of inlay is produced. Pieces of tin now are sometimes substituted for wood. Women occasionally wear in their hair the small *shimale* knife used for trimming and shaving.

The native tobacco readily to purchase of European introduction, but previously he was not an native stranger to the use of tools nonsense. *Wisha*, the bulbous root of a kind of grass which grows near water, contains some aromatic principle which has a pleasant odor. The stem is bent around and fixed into the bulb; this is then covered with beads and slung around the neck. *Mlungwa*, the *Mlanje* cedar, is also used, as well as the fruit of a shrub called *shimapa*. These substances are scraped into the snuff used for sneezing, and give it a pleasant odor.

No pigments are used on the body. As a sign of great rejoicing, the head and face and perhaps the whole body are covered with ashes, but the natives do not even paint the face with flour on ceremonial occasions.

Bands of beadwork are worn around the head, either as a simple band or a band finished off with a beads in one spot, or with a tassel. Finger rings are worn made of ivory, shell leaf and horn, lead, and iron wire. There is also a great variety of bracelets and anklets, a list of which is given below.

Chipondo: made of plaited grass, worn chiefly by little girls and women who cannot afford more expensive bracelets. As many as half a dozen may be worn on the wrist.

Lilengwala (pl. *malengwala*): single circles of solid brass, one half to three quarters of an inch in diameter, worn by women usually as anklets, one or two on each limb. They may still be seen on some of the old women, but as they cause much discomfort, they have gone out of fashion. A man used to be very proud to see his wife adorned with so much wealth and she was content to be so hobbled by her vanity. The hammering up and pulling open of the *lilengwala* circle in order to remove it cost a fowl.

Chilwanje: a brass bracelet of small calibre; *chanje* (pl.) signifies a spiral cylinder made from the same thick brass wire covering the entire forearm.

Lilwanjili: like *chilwanje* of thin brass or iron wire, worn on arms and ankles.

Ching'ande: a bracelet of fine brass wire wound round a circular core. All the brass comes from the coast.

Lilaso: a large ivory bracelet worn by men and women.

Chanje: ("stiff tail hairs of an animal"), the bracelet made of the tail hairs of the elephant or the gnu.

Lidoko: the bracelet made from elephant hair.

Chiyelipo (*ku-yilipo*, to roll round), a bracelet made of beads wound on a bark-cloth cord.

Chiyao: the same, but the beads never a double row so that the bracelet is wider.

Kanko: a similar hollow cylinder of beadwork which lies flat as a bracelet.

Necklaces are much prized by the women. All the children, too, if possible, are provided with some kind of necklace, even though it be only a piece of string. They are generally made of beads; charms and their ornamental inclusions are also worn as necklaces. Some names refer to the pattern of the beadwork, others refer to the length or fashion of the necklace.

Chiyao is a necklace which hangs down in front to the level of the breasts; it does not go under the arms, as Hetherwick states.* It consists of three, four, or five strings of beads in rows, arranged in a pattern.

Anyanyi: hangs down as far as the necklace. The word *Anyanyi* means "chase-tail."

Chinyanga is made of a single string of beads, but hangs as low as *chiyao*. *Chiyao* is of more than one string and various coloured beads enter into its composition, often in fancy patterns.

Chipete: consists of a single string of beads of one color that tightly round the neck without tassel or beads.

Chikwanda is worn like *chinyanga*, but beads of more than one color are used.

Chinyanga resembles *chikwanda*, only more strings of beads are used.

Mapanda: a solid cord of bark cloth covered with beads of one color, either dark blue or white, worn round the neck crossing on the chest and under the armpits; the cords are as thick as the finger. These are worn especially by girls after *Chipete*.

Chiwandu: a cord of beads as in *mapanda*, but worn round the neck only. The necklace consists of perhaps six strings of beads, the first of which is worn close to the neck, while each succeeding string hangs lower and more loosely.

Chipati or *chikulipo*: made of three plaited strands of beads, generally white.

Kikolikio: a necklace with a tassel, usually consisting of two large red beads.

Mlale ("a striped snake"): made of four strings of beads, each row being of one color.

Mkiba nakwase ("the rat's tail"): like *mlale* consisting of two, three or four strings of beads.

Chowa cha mwako (*mwako*, "bag"): a hollow cylinder of bead work usually of blue and white, worn as a necklace. *Chowa* is the Chiyao word for beads; in Chinyanja, it means wealth.

Limondo is a word referring to the pattern of the beadwork, so called from the resemblance to the eyes of the *mono-ezi*; in *limondo*, white beads are arranged in rosettes round a series of larger black beads in a band.

Most women and many children wear beads round the waist. They are supposed to be very attractive to men. The prostitute wears more than anyone else, for the same reason

* Op. cit., p. 111.

[illegible] that she is tattooed more profusely on the buttocks and legs. The choice of beads was formerly made like ungumbi with a bark-cloth cord, called mbombo or mbele (to-wrap, to slip off), referring to the mbele being slipped off over the legs. The ladies now in to wear single strings of beads, each string is of one color but all the strings are different and perhaps number a dozen or more.

Lipumbu: a bead belt three-inches wide, worn by Tao women near Lake Nyasa. A bead apron, *lingiro*, is also worn by them but not near Ruvuma (Pl. VI, fig. 3).

[241] A woman removes her beads when she is "unclean," that is: (a) during the menstrual period, (b) during the period of mourning for a near relative when colour is forbidden, (c) before the birth of a child and afterwards until such time as she may resume intercourse with her husband.

A large variety of beads has long been used by the Tao. There are some rarely seen [242] now which were much prized in years gone by, while others are of quite recent introduction. There is no evidence that they themselves made beads and there are few which are probably not of European manufacture.

Clothing. The Tao used bark-cloth before the introduction of woven materials. The older people may still be seen in it and it is used in most of the ceremonies. At one time, they also used to weave a cloth called *lilomomba* from a native cotton plant. This has been given up since the introduction of imported materials.

For the method of wearing cloth, see Pl. II, fig. 3. The very poorest people wear only a strip of cotton round the pudenda, held in position by a string round the waist hanging long behind and in front; this is called *mbombo*. Tao women, when menstruating, wear under this a little piece of cloth called *lilomba*; it is only worn at this time and not always as in certain other tribes.

[243] Warfare. Fighting has naturally played a large part in the life of the Tao as among other African tribes, but at no time were these people a trained fighting race. Warfare was of a desultory character resembling mostly of raids by one headed chief upon another. A party of men belonging to a chief at enmity with another, meeting some of his followers would challenge them, "*Ahombo*, who are you for?" The name of the rival chief in answer was the sign for battle to begin. A false answer would never be given to gain an advantage. When about to throw a spear, the thrower calls to his adversary.

[244] The Tao have possessed guns for a long time. Going out to fight, the Tao used to hop from one foot to the other, and spin their guns around in their hands. They made their own stocks for the rifles. They also used to make a small, cast-iron cannon about three feet long, called *kombola*, "a little man." It was carried in the arms and was touched off by a torch. Drums called *ungoje* were taken into battle. There is an old war drum at Malenya's village, taken in 1906 by the old Malenya from a Mang'ungu chief called Mkokombo who lived near Lake Chirwa. Since then, this drum has always gone into battle with Malenya. Around it his men would dance and anyone who had killed a man in battle would run up to it and spit upon it in admiration.

N2
.3A2
S39
301
S6

[End Plate 1.]

142
281
301

[End Plate 2]

3: Stannus D-5 (ca. 1912) 1922 FT7 Yao FT7

535
534
291
301

323
415

2. Professional dancers with kilt and lad sayyid

4. Potters

857
535

1. Small boys dancing Ogwede

3. A group of Yao at a dance

[End Plate 3]

534

291
357

1. Musical instrument, the mapolopolo, played by Yao youth

2. A Yao as a native servant

304

142
301

3. Specimen of scarification (Yao woman)

4. A Yao native

[End Plate 5]

ndundu, a woman who is pregnant for the first time;[1] *kawindwe*, a woman who has one or two children; *ujiwindwe*, a woman who has three or four children, and lastly, *ndulwe*, a woman who is past child-bearing age. 554 584

The information which I have been able to collect on abortifacients and contraceptives suggests that they are not used by married people merely to prevent their having more children, but that they are used by people who wish to avoid pregnancies which would be embarrassing, for example, by a woman whose husband is a labour migrant. To what extent the abortifacients and contraceptives are efficacious I cannot say; some, I know for certain, rely on a magical principle, for example, the medicated cord worn by a man during intercourse. On the other hand, the abortifacients taken orally may have some active ingredient. 842

A barren woman or an impotent man is regarded with some embarrassment and the marriage sureties (*ariamangatwe*) of a childless couple will go to considerable trouble and expense consulting diviners and leeches in an attempt to make their wards productive. Childless couples are regarded as not fully adult and are treated [885] [559] in a patronizing way by those who have borne children. Since a man may marry other wives, barrenness in a woman is a cause of sorrow to her husband, but is not [586] in itself a ground for divorce. Where the man is impotent, however, the woman may divorce him on this ground, though she usually takes a paramour and forces [837] her husband to an action for damages which automatically leads to a divorce because [694] it is the usual practice in these cases for the court to ask the woman if she wants to be divorced from her husband.

In contrast to the satisfaction shown at the birth of a child is the sense of awe 845 evinced when a child is still-born or the woman miscarries. The Yao do not distinguish between still-births and abortions, both events being known by the word *kwatunga*. This is a verb and refers to the process of abortion; there is no term for the dead foetus itself. I made no attempt to enumerate miscarriages and still-births because they are supposed to be due to breaches of sexual taboos on the part of the husband and wife, and interviewees were naturally reluctant to mention them. Miscarriages and still-births are greatly feared, and the woman is considered to be in [783] a very dangerous condition until she and her husband have carried out a ritual purification. Should a man have intercourse with a woman who has miscarried and [753] not yet been purified he will contract a disease called *kwao* which is believed to be invariably fatal. Still-born children or aborted foetuses are buried in a hole dug with [766] sharpened sticks in the bush by the women, whereas children who are born alive and die afterwards are buried in the graveyard in graves dug by men with hoes. The burial spots of still-born babies or aborted foetuses are marked with a stone or broken pottery, since it is believed that to step on them will induce an illness.

The concern of the interested kin-groups is shown in the child-birth procedure. 844 Birth normally takes place in a hut in the presence of the older female relatives of the woman and the female representatives of the man. The husband's representatives are necessary because the Yao, like many other Central African peoples, believe that an adulterine child will not be born to the woman unless she confesses (*kapaza*) the name of the genitor. If she persists in concealing the identity of the genitor, they

[1] *ndundu* = elephant, hence ivory. The terms *ndulu* and *ndundu* have both refer to the ivory bands traditionally worn by the woman in the pregnancy initiation ceremony. [192] [361]

843 ***Pregnancy and childbirth.*** An event of the first importance in the Yao world is the first conception or rather the "quickening" with the first child, *Lítiso*; this is described
842 below, together with the other ceremonies of the *Unyago*.[1] After the ceremony of *Lítiso*, the period of waiting until the birth of the child passes without further event. A point of medical interest is that native women suffer in many cases from "morning sickness" during pregnancy. That they may have perverted appetites is also recognized, grain husks
[171] and crabs being among the things most commonly desired. As the Anyanja,[2] the Yao believe that the child develops from the semen of the male, although the growth of the child is in some way connected with the mother.

844 When labor commences, the woman retires to the bush a few hundred yards away from her house, attended by some friend, seldom a midwife, and never by her own people, though the mother and the mother-in-law will probably be near the spot. If labor is not completed by evening, they return to the house and the birth may take place actually within its walls.
[171] The attitude assumed in labor is the same as that adopted by the Anyanja,[3] the patient semi-reclining in the arms of another woman who sits behind, grasping her belly. The vulva is smeared with a decoction made from the bark of the *mpoa* tree as a lubricant, but no other help is given. *Kumhuli* is the name given to the place of confinement; *m'huli* means the house where the woman remains for a period after the confinement. The Yao recognize the protruding bag of amniotic fluid and call it the "oil-gourd". "*Chiasai chikasiche?* (The oil-gourd, has it broken?)." They wait until the placenta is delivered before dividing the cord. This is done with the sharp edge of the outer covering of a maize stalk or sugar cane; a knife is never used. The section is made near the placenta or half-way between it and the child, after tying the proximal end with a bark string.

The woman who receives the child at birth is the *ambusanga*, friend or godmother. If the infant is born in the bush, she carries it back to the house whither they go as soon as labor is completed. The mother herself, unless she is very ill, goes out shortly afterwards and buries the placenta in the ash-heap, using a stick to dig the hole, never a hoe.

846 After the birth, the mother and child must remain in the house until the umbilical cord separates, during which time the husband does not enter, though he may come to the door to look in at the child.

The day on which exit from the house is made, the floor is entirely replastered with mud.
[852 The baby's head is shaved and a cross is made upon it with *ngama*, a kind of red pigment.
553 The husband may then receive the child and in the case of a first-born, it is he who gives it
302] its name; other children may be named by the *ambusanga*, the mother, or the aunt.

When the mother leaves the house to appear in public, the *nakunga* who put her *lítiso* on,[4] removes it.

So long as the infant remains in the house, care must be taken as to persons allowed to handle it. A woman who has recently had a menstrual period or coitus with her husband,

[1] Vide infra, p. 274. [2] Stannus, op. cit., p. 310. [3] Ibid. [4] Vide infra, p. 274.

3: Stannus D-5 (ca. 1912) 1922 FT7 Yao FT7

then listens to an account of the circumstances attending the illness and death. The point at issue is whether there is any evidence pointing to death from unnatural causes which requires consulting a diviner. The chief practically always agrees with the relatives, and it is said that he will never press them to go to the *wochisanjo* unnecessarily. The case may end with this conference, or here may begin the long series of events described under *usewi*.[1] 768 622

During the month subsequent to the funeral, certain taboos have to be observed. The widow may not bathe, and with the exception of the *awile*, all who attended must refrain from sexual intercourse. At the expiration of this period, beer is brewed in the village, and all the friends and relatives are again summoned. This beer-drinking is called "the beer of rottenness," or "the beer of resignation." In addition to the beer, food is provided, and everyone helps himself without ceremony. *Chindimbo* is sung and danced and at the present day, bands of trained dancers attend, including *ching'wenjeng' wenje*.[2] A pot of beer is sunk into the ground, marking the site of the dead man's house. The night of *matapata*[3] sees husbands and wives reunited, and the widow may go through ceremonial intercourse with a man appointed for the purpose called *litunu* or *mbilo*. Sometimes the widow refuses *litunu*, and is given medicine instead to cleanse her; her body is then no longer "hot" and likely to bring disease to those about her. A widow does not marry again for two or three years. A young man who loses his wife has no longer any standing in her village after *matapata*. He is usually given a present, with the suggestion that he go elsewhere. After the death of an infant, the mother is considered unclean. She sleeps on a mat apart from her husband till after the ceremony of shaving, and then undergoes a ceremonial coitus with her husband — in which case he is called *litunu* — after which, ordinary cohabitation is resumed. If she has been a widow, or if the child was born "with disease,"[4] another man acts as *litunu*. 765 768 [833] 587 768

The morning following *matapata*, all the fires in the village are extinguished. A fresh blaze is then kindled with the fire-drill, *lumangu*, either in the chief's house or in some spot nearby, and from there, fire is carried to all the houses. The ashes of the old fires, the stones supporting the cooking pots, and the porridge sticks are taken to the cross-roads, and there destroyed. Everyone then shaves all his own hair, head, axillae, and pubis. The custom of the second shaving by the *awile*, described in *Africana*,[5] is, I think, an adaptation from the Anyanja. A year later, beer is again brewed, and all the relatives summoned to the village to partake of it. There is dancing, but no ceremony. 769 [372] [302]

The Yao bury their dead in regular graveyards in wooded country, the thicker the forest the better, often two or three miles away from a group of villages. Different villages bury their dead in different parts of the burial ground; relatives are usually buried near one another. Graves are never revisited, and no one would enter a graveyard except at the time of a funeral, and then only after obtaining permission from the chief. Such spots are 764 769

[1] Vide infra, p. 396.
[2] Vide infra, p. 370 and Pl. I.
[3] Beer-drinking.
[4] Vide infra, p. 396.
[5] Macdonald, op. cit., p. 111.

881
533
539

"*Tingamile* *mwanenge* *ku* *Lupanda,* *pinga ujo'ya* *kundanda* *mangunguni*"
"I will go and bring my child to *Lupanda,* when I am going home I feel nervous!"

and running round he seizes hold of one of the *wali* and makes him sit down at *Lupanda,* continuing this until he has placed them all in a circle round *Lupanda.* He then sings a song about the little basket which the chief sent him containing the remains of the *mbepusi* flour:

"*Kando* *ungwa* *ahwilinga,* *ungala* *mbwamanda,* *anana!*"
"Little basket the owner asks for it back, give me beans, mother!"

His wife who has been waiting in his hut nearby brings him the basket. Holding it in his hands, he prays to the spirits of his ancestors and all the previous medicine-men to whom his medicine-tails have belonged, invoking their aid that the ceremonies may go well.

Still holding the basket he begins to dance, singing:

"*Apatule* *mbepusi* *jisu!*"
"Let them (us) smear flour their (Let us baptize them!)"

and dipping his right elbow into the basket he smears each *wanali* on the forehead with the *mbepusi* flour. He then goes into his hut and fetches a bundle of powdered roots (which no woman may touch), medicine called *mitibule,* that is, a medicine used for its aphrodisiac properties. Holding the medicine between the palms of his uplifted hands, he starts singing:

"*Kubwinunga* *kuchipopole,* *kwilinga* *mkwa!*"
"I cannot find out how to untie this, we tied (with) my brother-in-law!"

He is immediately surrounded by his assistants and the drummers, who dance round him, all holding their hands about his own, after which he unfastens the bundle of medicine and puts a little on the tongue of each *wanali,* beginning with the leader. He then takes some sweet-beer made by the chief's wife and pouring it into his old medicine-gourd, he mixes in some *mitibule* and gives some to each *wanali* to drink after which he sings:

"*Amunda,*[1] *amunda* *mwanje* *wa* *imunga,* *chakulpa* *mundanda*
"You have drunk a mixture of water and maize flour, of eating eggs
achilacha *panapano,* *Amunda,* *amunda* *ndundile* *mukwau;*
you stop now, you have drunk (but) I have passed water (in it);
wati(ji) *kalumuka!*"
you thought to be clever!"

[300] Next he goes into his hut with the small basket containing the *mbepusi* and paints his assistant with the flour, a semicircle round the forehead, a line down the middle of the face, a band across the chest, a line down each arm with rings round the arms and forearms, and a line down the middle of the back. They go out again into the ring and while the *m'michile* sings:

[1] This may be a reference to *amunda,* the mortified sap.

3: Stannus D-5 (ca. 1912) 1922 FT7 Yao FT7

(fig. 14), and an antelope from Mpona's in Zomba district (fig. 11), also two birds at Pikani's which I should think represent a fowl and a crow (figs. 12, 13). It is interesting to compare these attempts which show a natural feeling for shape, with others, the work of an Angoni youth in touch with a European mission station, who depicts the missionary, his donkey, his dog, and a chair but with little or no sense of form. Note the dots above the animals' backs which represent their feet seen from the other side (Pl. XVIII, figs. 15–18). 532

The models of animals and other objects made in relief on the ground at *Lupenda*, and of animals in grass and bamboo at *Chiputu*, are referred to under *Initiation Ceremonies*.

Decoration is limited to the making of patterns of geometric design on many household articles. The graving of pots is mentioned under *Pottery:* gourd vessels sometimes have lines and triangles cut on the surface; ivory knife handles may have concentric circles graven on them, the same being true of ivory nose-rings and necklaces. Spear handles and walking sticks, snuff-boxes, pipes, the head-rest and the necks of musical instruments too, are commonly engraved with designs. The wooden rim of the *mtengwi* basket is always so treated. A series of these designs from baskets is reproduced (Pl. XVII). Occasionally geometric patterns are painted on the walls of huts. The best example I have seen is shown in the photograph which represents a Mohammedan mosque in South Nyasa district. This, I think, gives the key to the origin of these geometric patterns, namely, Swahili influence among the Yao (Pl. IV, fig. 1). 531

Personal ornamentation. The skin color admired most among the Yao is a rich brown and is likened to the color of the milliped, *kjengulo*. A very black skin is not liked and a man is said to be "as black as a crow." Very light colored skins are equally distasteful to some and considered to resemble the color of a roasted crab. The hair should be jet black. Young men anoint their heads with a decoction of *namalenga* pods in boiling oil to make the hair black and lustrous. When the hair is turning white, a substance made of the charred roots of a plant called *chisinje* is put on to make it black. 832 826 302

Natives recognize that some among them have red hairs on their heads or in their beards, and such a man is called *nahuena*, *nahuena* being the name of a caterpillar which lives on the *nituma* tree and is covered with long red hairs. 832 826

The old men used to wear wigs, *chisindi*, made of knotted string blackened and oiled to look like hair; the women wore one called *chiluma*. These were used to disguise greyness or baldness.

The women sometimes let the hair grow long and then thread beads on wisps of it. This fashion is called *chitunga*. The large red bead, *chitalaka*, is now used for the purpose. This fashion was adopted by the old women and those in charge of the *Chiputu* ceremony. Strings of beads threaded on the hair falling down round the head are called *hlomhola* or *nahomhola* (plur.). Women sometimes thread beads on the crest of hair called *achacha*. Ordinarily the hair is periodically shaved or sometimes cut with a knife, but the process is painful and therefore unpopular.

3: Stannus D-5 (ca. 1912) 1922 FT7 Yao FT7

302 Shaving is a rite practised in mourning.[1] Some old men and women, especially medicine men, make a practise of never cutting the hair and never washing it (Pl. VII, fig. 3). One occasionally sees lunatics with very long hair in the villages.

[158]

The Yao do not follow the Angoni practise of tying up into tags the hair which has been allowed to grow long with palm leaf string, but they sometimes tie up a single wisp and make it up with medicine; this is called *lutembi* or *njombi* (plur.).

The scalp may be shaved in various fashions. Among men, it is quite common to trim the hair on the forehead, *ku-ajikila;* they must not, however, trim the hair behind (Pl. XVIII, fig. 2). Women, on the contrary, trim both in front and back; a man doing so would be laughed at. A woman for the ceremony of *Lítiwo* shaves the front hair a little higher still, but she must be careful not to do so at other times, otherwise she would make herself a laughing stock (Pl. XVIII, fig. 10). The hair is sometimes shaved on either side of the midline in front, in imitation of temporal baldness; both baldness and this method of shaving are called *mazuzuwe* (Pl. XVIII, fig. 4). Or again, among old Yao men the crown is shaved; this and natural baldness are called *lulasi* (Pl. XVIII, fig. 5). It is a fashion much affected by old men and great annoyance is caused them by any young upstart who does the same. Other methods include for men *mpila*, "a rat's path," an antero-posterior median line shaved (Pl. XVIII, fig. 9); *ingolongondinje*, two shaved lines made from back to front on either side of the head (Pl. XVIII, fig. 3); for men and women, *kpundulawila*, "the garden is (dead) overgrown", one lateral half of the head shaved (Pl. XVIII, fig. 7); for men, *sukuchu* a crest of hair left along the mid-line, both sides of the head being shaved (Pl. XVIII, fig. 8); *mwezi* (*chilemba cha mwezi*), "the moon," a crescent shaped area shaved on one or both sides of the head (Pl. XVIII, fig. 6).

The eyebrows and eyelashes are always left to grow normally among the Yao.

The Yao man used to take great pride in his beard; it was the object of a good deal of washing and combing. It grew to considerable length and was not cut or trimmed, but the hair growing down low over the throat was shaved, as was also the hair immediately below the mouth on the under lip and the moustache, as it was thought to get in the way when drinking. The whiskers were allowed to grow like the beard.

[832] [435]

Hair on the chin or upper lip of a woman is rarely seen and on account of its rarity is much prized. Such hairs have a monetary value for making medicines, a single hair being sold for eight yards of calico or two shillings. Body hair is considered to be a sign of strength; on the chest, it is known as *chanpulama* (*ku-chanpulama*, to be strong). Body hair including hair on the back is by no means as rare as has been supposed. Sir H. H. Johnston says that he has never seen it,[2] a statement which shows lack of observation. The hair on the forearms and thighs is called *chenje* or *chembende;* Hetherwick translates this word,[3] I think wrongly, as hair on the body. Body hair is never removed in any way. A man named Katumbisi ("the little vulture") of Ulumba had a very large amount of body hair; he was likened to a baboon and was a source of much interest to the children who saw him.

[114]

[1] Vide supra, p. 364. [2] British Central Africa, op. cit., p. 398. [3] Op. cit., p. 111.

3: Stannus D-5 (ca. 1912) 1922 FT? Yao FT?

The hair of the axilla is always removed in men and women, usually by shaving but sometimes in the case of women it is dealt with as in the case of the pubic hair. A man with unshaven axillae would be laughed at and referred to as "a man carrying a fowl in his armpit." The axillary hairs are called *mandenga pa mungwapa* (*ngwapa*, the armpit). 302

The pubic hair, *mandenga*, is removed by both men and women; in men by shaving, in women sometimes by shaving, but preferably by plucking out after the application of a medicine called *mesemandenga* (*ku-esse*, to pluck a fowl), which renders the operation easy. It is prepared from the juice which exudes from the bruised bark of the *meso-mandenga* tree. There is a woman at Malemya's who has never grown any axillary or pubic hair; she is called "the rogue elephant"; a rogue elephant has no tusks. It may be noted in passing that the woman has borne children. [824]

A few men have the hair round the anus shaved. Such a service can only be asked of a man's closest intimate, such as a brother-in-law. [607]

I have dealt with tattooing among the Yao in an article, as yet unpublished, on tattooing among the natives of Nyasaland.

The teeth among the Yao proper are never mutilated in any way, though the Amangoche go in for small file marks at the cutting edges of the incisors. 304

The old Yao women, of whom some may still be seen, used to pierce the upper lip and wear a circular disc of wood often two inches in diameter in the hole; this is called *lupelele* (Pl. VII, fig. 4). The disc was often made of lead and sometimes of ivory. The lead might be hollowed out on the upper surface; it was then called *lupelele lua utuli*. The disc caused a considerable projection of the upper lip which was much admired. A man, on the other hand, with protruding lips would be nicknamed "the warthog," *namangindu*, and considered ill favored. 304 301 [832]

This *lupelele* fashion has gone out and of later years the *chipini* or disc worn in the left ala of the nose has become more and more fashionable (Pl. II, fig. 2). Originally the *chipini* consisted of a small disc of lead not larger than a three-penny piece, which lay on the outer surface of the ala, held in place by a stem, *luchinji*, which pierced the ala and passed into the nostril. Now the fashion is to wear a very large disc, often an inch in diameter, which itself occupies a hole in the substance of the ala of the nose; it may be flat-topped and called *chipini cha utenga* ("mushroom"), or the upper surface may often be concave, in which case it is called *chipini cha utuli* (*lituli*, a grain mortar). These disks are made of lead and are sometimes called *lidini*, a recent word and doubtless a corruption of "lead." Others are made of ivory, which may bear some geometric pattern on the exposed surface. A *chipini* used to cost a fowl.

Among Yao men and women, the lobule of the ear is often pierced but nothing is worn in the hole except possibly a stalk of grass.

Combs for use and for ornament are worn in the hair by both men and women. The ordinary comb without decoration is called *likuembeya;* it is made of a number of pieces 301

3: Stannus D-5 (ca. 1912) 1922 FT7 Yao FT7

301 of bamboo fastened together at one end on the flat side by binding with string, the free ends being sharpened to form the teeth of the comb. If the fastened end is ornamented with beads sewed on in patterns, the comb is called *lisamulo* (*ku-samula*, to comb). *Lisamulo lis*
[824] *chingumbata* from *ku-ngumbata*, to be sticky, is the name of a small comb worn purely for ornament. On either side of the base of this comb, pieces of wood variously shaped are glued with the sticky juice from the root of the *chingumbata* tree. In this way, a sort of inlay is produced. Pieces of tin cans are sometimes substituted for wood. Women occasionally wear in their hair the small *chisando* knife used for tattooing and shaving.

302 The native takes readily to perfumes of European introduction, but previously he was
[177] not an entire stranger to the use of such essences. *Mboka*, the bulbous root of a kind of grass which grows near water, contains some aromatic principle which has a pleasant odor. The stem is bent around and fixed into the bulb; this is then covered with beads and slung around the neck. *Mkungusa*, the Mlanje cedar, is also used, as well as the fruit of a shrub called *chiungusa*. These substances are scraped into the castor oil used for anointing, and give it a pleasant odor.

No pigments are used on the body. As a sign of great rejoicing, the head and face and perhaps the whole body are covered with ashes, but the natives do not even paint the face with flour on ceremonial occasions.

301 Bands of beadwork are worn around the head, either as a simple band or a band finished off with a bunch in one spot, or with a tassel. Finger rings are worn made of ivory, eland hoof and horn, lead, and iron wire. There is also a great variety of bracelets and anklets, a list of which is given below.

Chigumbe: made of plaited grass, worn chiefly by little girls and women who cannot afford more expensive bracelets. As many as half a dozen may be worn on the wrist.

Likangala (pl. *makangala*): single circles of solid brass, one half to three quarters of an inch in diameter, worn by women usually as anklets, one or two on each limb. They may still be seen on some of the old women, but as they cause much discomfort, they have gone out of fashion. A man used to be very proud to see his wife adorned with so much wealth and she was content to be so hobbled by her vanity. The hammering up and pulling open of the *likangala* circle in order to remove it cost a fowl.

Chikungu: a brass bracelet of small calibre; *ikungu* (pl.) signifies a spiral cylinder made from the same thick brass wire covering the entire forearm.

Likwinjili: like *chikungu* of thin brass or iron wire, worn on arms and ankles.

Ching'anda: a bracelet of fine brass wire wound round a circular core. All the brass comes from the coast.

Likosa: a large ivory bracelet worn by men and women.

[237] *Ukanga:* ("stiff tail hairs of an animal"), the bracelet made of the tail hairs of the elephant or the gnu.

Lisheka: the bracelet made from elephant hoof.

3: Stannus D-5 (ca. 1912) 1922 FT7 Yao FT7

142
291

1. YAO MAN WEARING HEADCLOTH (COAST FASHION)

2. THE SAME IN PROFILE

142
291
302

3. AN OLD NATIVE WHO HAS ALLOWED HIS HAIR TO GROW LONG

4. AN OLD WOMAN, SHOWING THE lipstick WORN IN THE UPPER LIP

[End Plate 7]

3: Stannus D-5 (ca. 1912) 1922 FT7 Yao FT7

532

142
291

1. Native painting on the outside of a hut wall

2. A Yao native

142
302

3. Machinga Yao youth

4. Machinga Yao youth, showing low growth of hair on the forehead

[End Plate 8]

3: Stanmore D-5 (ca. 1912) 1922 FT7 Yao FT7

302

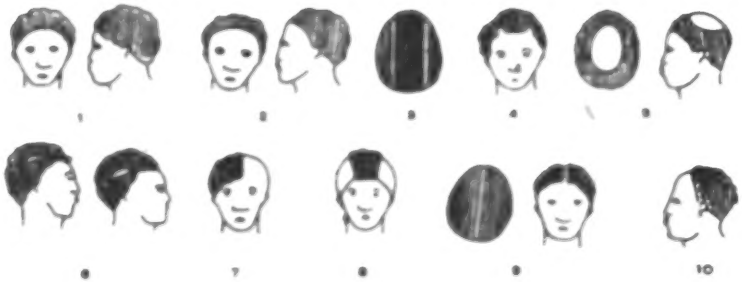

532

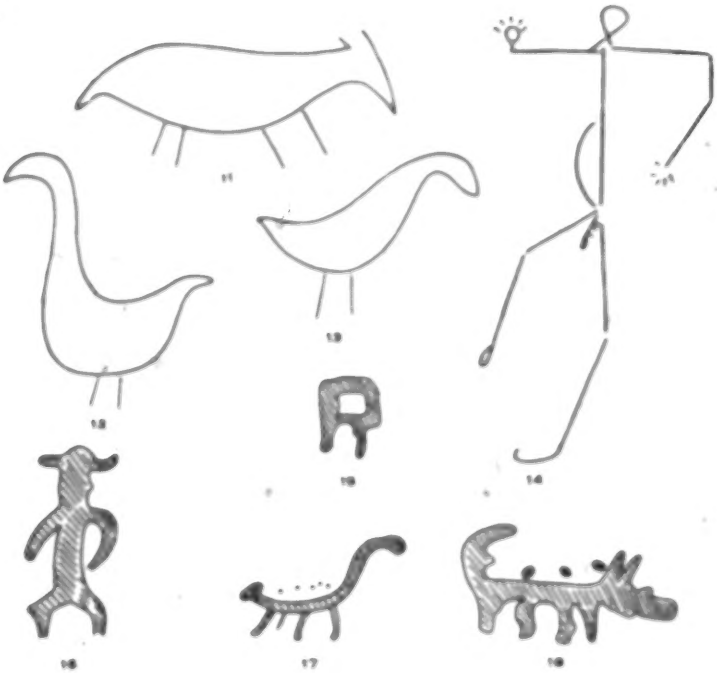

1-10, Hammondsburg; 11-18, Native drawings

[End Plate 18]

1: Tew E-4 (no date) 1950 FT7 Yao FT7

return to the *lupanda*, where the initiates are welcomed by their friends. An essential part of the ceremony which takes place at this stage is the exhibition of animal shapes made by the *m'micira*, with mounds of earth outlined in flour. These animal shapes differ from lodge to lodge. On the last night before the return to the village the initiates undergo a ceremonial bathing, each boy being carried to the stream by a woman, who thereafter is addressed as 'elder sister'. Finally, with new names, and freshly oiled and decorated, they march to the chief's village to be redeemed by him from the *m'micira* with gifts of cloth. After initiation it is a deadly insult to call a boy by his child-name. All who pass through initiation together consider themselves bound by mutual obligations of hospitality.[1]

Girls' initiation takes place in three stages. First, there is *ciputu*, the general initiation before puberty, which corresponds to the boys' *lupanda*. It takes place at the same time of year, and though it lasts for less than a week, its conclusion is celebrated at *lupanda* jointly with the conclusion of the boys' initiation. A hut is built in the bush, like the long dormitory of the boys, and four days are spent in dancing and singing. Each girl (aged about eight years) is accompanied by a sponsor, a woman friend who continues to be her mentor during subsequent rites, and who assists in giving the girl instruction in her womanly duties. At the end the girls are bathed and anointed, dressed in new clothes, and each is carried to *lupanda* by her sponsor. Here they prove their skill in dancing and receive gifts from their friends. Ritual defloration follows the *ciputu* initiation.[2] Among Mohammedans, clitoridectomy used to be performed by a woman operator, but, it is said, was discontinued in about 1903 on account of the heavy mortality.[3]

After this first general celebration, first pregnancy and first birth are the occasions of separate rites for each girl. According to some informants there were once two ceremonies connected with pregnancy. One, for the young married men whose wives had not yet conceived, used to take place at the same time as *ciputu*; each man was attended by a woman sponsor not his wife, given good advice, and put through various tests of manhood. Mitchell does not confirm the present existence of this ceremony, but in the old days if a man was betrothed or married to a child going through her *ciputu* he had to accompany her.

The *litiwo* ceremony takes place when a young married woman quickens with child for the first time.[4] The woman, with her sponsor and the married women of the neighbourhood, went out in procession for a ceremony of singing and dancing and instruction to the young couple, followed by a feast. Nowadays no men are allowed to attend *litiwo*. A child born of a woman who had not undergone this rite used to be buried alive; nowadays her *ayene mbumba* is charged by the chief.

Finally, six days after the first child is born, its naming ceremony forms a last initiation rite for its mother. The husband is formally led into her hut by her sponsor and the married women of the neighbourhood, and the child is taken out for the first time to the accompaniment of feasting and dancing.

Most Yao men and women act as sponsors of initiates at least once, and all parti-

[1] Sources for boys' initiation: Stannus and Davey, 1913; Werner, 1906, pp. 124–6; Stannus, 4, 1922, pp. 247–63; Heckel, 1935, pp. 19 sq.; Johnston, 1897, p. 409; Weule, 1, 1909, p. 304.

[2] Stannus, 4, 1922, p. 234.

[3] Ibid., 1, 1918, p. 256.

[4] Ibid., 4, 1922, p. 274; Heckel, 1935, p. 23, calls it *cinumbu* (belly).

764 performed these services used to enter a special relationship of privileged familiarity with
767 the village of the dead. This has died out in Nyasaland, but accounts of *Utasi*[1] among the Yao at Masasi and Songea suggest that something of the kind is still practised.

766 Chiefs and headmen are not buried outside the village, as are other persons. They used to be buried before their own huts, but now in the centre of the village. Shrines were raised over their graves, at which offerings of beer and flour were made. If the village was moved the pot of beer sunk into the ground at the chief's grave was also removed and reinstated at the new site. A dead slave was buried by his fellow slaves; normal rights of sepulture were denied to suicides and to persons who had died in taking the poison ordeal (that is, convicted sorcerers).[2]

OTHER DISTINCTIVE CULTURAL FEATURES

301 The Yao have a tribal mark of two short cuts on each side of the face between the
304 eye and the ear.[3] Their women did not wear the *pelele*, lip-ring, although their neighbours the Makua and Makonde did;[4] the fashion seems to have spread to south Nyasa
[171] in the 1880's, as many travellers commented on it, without distinguishing whether the wearers were Yao, Nyanja, or Lomwe.[5] The women used to pierce the left *ala nasi* and insert a metal or lead stud, *cipini*.[6]

MAKUA-LOMWE

TRIBAL AND SUB-TRIBAL GROUPINGS AND DEMOGRAPHY

000 NOMENCLATURE

The *Ma-* in *Makua* is not a prefix, but part of the name. Variant spellings are *Makua*, *Makoa*, *Makoane*. They are sometimes referred to by the name of one subdivision, the Medo Makua, and called *Ameto* or *Meto*.[7]

The *Lomwe* (also spelt *Lomwe*) are called *Alolo* by the Yao, and are also frequently called *Anguru* (*Nguru*) which is an old name for the people of the region.[8] Any of the Makua-Lomwe peoples who have migrated into south Nyasaland are collectively termed *Nguru* in official reports; Nguru is a hill in the region of Portuguese East Africa, whence they come, but they should not be confused with the Nguru of Tanganyika.[9] Another name for them is *Acilowe*.[10] *Alolo* is incorrectly applied to all the Lomwe; it has a stricter application to the Cuabo from Quilimano.

[1] Scrivenor, 1937; Moreau, 1941; Spies, 1943.
[2] Main sources for burial are: Johnson, 3, 1922, pp. 28–30; Stannus, 4, 1922, pp. 240–6; Abdullah, 1919, pp. 19–21; Duff, 1903, pp. 322–4; Macdonald, 1882, vol. i, pp. 210–12.
[3] Murray, 1932, p. 153.
[4] Thompson, 1882, pp. 77–8, writing of the Yao of the Ruvuma valley.
[5] Macdonald, 1882, vol. i, pp. 16–17; 'around Blantyre hardly any women is without it'.
[6] Stannus, 1, 1910, p. 316.
[7] *Handbook of Portuguese Nyasaland*, 1921, p. 30; Murray, 1922, p. 56; Weule, 1, 1909, p. 259; Livingstone, 1874, p. 32.
[8] Theal, 1899, pp. 415–17; Gaspar Bocarro passed through Manguro country. Burton, 1873 (Lacerda's Journey, 1798), mentions Manguros.
[9] Abraham, 1931, p. 13; Murray, 1922, p. 46.
[10] Johnson, W. P., 4, 1894.

881 in turn. After drinking, they sit down while the n'mikilo gives instructions that here they sleep tonight. He takes his basket and starts to run back to *Lupanda*, singing:

[533 539] "*Ee* *tunjile* *pilelaje* *ukumbuje* *hukupiire* *ku Mundi!*"
"Where we went to masters to *Mundi!*"

Then going to the back of his hut, he enters and takes a piece of bark left there bent up into a dish containing medicine which has been put in by an assistant. This assistant holds in his hand the neck of one of the fowls which was killed at *Lupanda*. The n'mikilo washes his face and chest with medicine to cleanse his eyes and then leans forward to the assistant and bites a piece off the neck of the fowl which the assistant holds out, and eats it. This is *ku-lumiva*, "to taste a small piece," often the liver, before starting to eat the flesh; this is generally done by the most important person. The n'mikilo has been followed by his assistants who do as he has done. They all follow him next round the cooking place for the boys at *Lupanda*, each standing for a moment on the stones which have supported the cooking pots, while the women sit looking on sadly. He begins to dance and the women join in, singing *likwata*. He then calls the parents of the wali and leads them to where the boys are. There assembled, he tells them they must not bathe, and that tomorrow morning early, porridge is to be sent to the wali which must be prepared by a woman who has had connection with her husband and who has not washed her hands; this is supposed to make the boys strong. Early in the morning, the husband, who likewise has not washed his hands, carries the food to the wali and personally gives portions to each boy to eat.

881 When they have partaken of the food, the circumcision is performed by the n'mikilo
●304 who has returned the same morning early. The wali one by one, commencing with the leader, go forward a little to the place where the n'mikilo awaits them. Each wali is accompanied by his *nkumwai* who commonly says, "Come along and you shall eat of the honey made by the bumblebee." Such honey is very sweet and called *mawa*. This refers in sarcastic terms to the pain the boy is about to undergo. The boy squats down, leaning back on his *nkumwai* who supports him, while the medicine-man, having warned the lad not to cry out, performs the circumcision with a small knife called *chiwanda*. It is a triangular knife with one cutting edge and a handle produced from the opposite corner. Properly
[412] the Yao method is, I believe, only to nick the free margin of the prepuce just to the right of the middle line near the frenum, but complete circumcision is now commonly practised, possibly as the result of Swahili influence. In this case, the prepuce is seized and held by the fingers, and division made by a circular incision without using a clamp or forked stick.
[752] A dressing of charcoal and oil may be applied or medicine is chewed in the mouth and the saliva spat on the wound and the boy sent on to rest under some convenient tree.

When all the wali have been circumcised, they are gathered together in one place and
881 the n'mikilo dividing them into groups, puts on the neck of the leader of each group a
[751] necklace made of plaited bark from the *mpondo* tree; these necklaces contain medicine against all evils - WITCHCRAFT [illegible] LIONS, etc.

The hair of the axilla is always removed in men and women, usually by shaving but sometimes in the case of women it is dealt with as in the case of the pubic hair. A man with unshaven axillae would be laughed at and referred to as "a man carrying a fowl in his armpit." The axillary hairs are called *mandanga pa mungungu* (*mpungu*, the armpit). 302

The pubic hair, *mandanga*, is removed by both men and women; in men by shaving, in women sometimes by shaving, but preferably by plucking out after the application of a medicine called *mnamandanga* (*ku-mana*, to pluck a fowl), which renders the operation easy. It is prepared from the juice which exudes from the bruised bark of the *mana-mandanga* tree. There is a woman at Malangya's who has never grown any axillary or pubic hair; she is called "the rogue elephant"; a rogue elephant has no tusks. It may be noted in passing that the woman has borne children. [124]

A few men have the hair round the anus shaved. Such a service can only be asked of a man's closest intimate, such as a brother-in-law. [607]

I have dealt with tattooing among the Yao in an article, as yet unpublished, on tattooing among the natives of Nyasaland.

The teeth among the Yao proper are never mutilated in any way, though the Amangoche go in for small file marks at the cutting edges of the incisors. 304

The old Yao women, of whom some may still be seen, used to pierce the upper lip and wear a circular disc of wood often two inches in diameter in the hole; this is called *hapidde* (Pl. VII, fig. 4). The disc was often made of lead and sometimes of ivory. The lead might be hollowed out on the upper surface; it was then called *hapidde ha utali*. The disc caused a considerable projection of the upper lip which was much admired. A man, on the other hand, with protruding lips would be nicknamed "the warthog," *nunungindu*, and considered ill favoured. 304 301 [832]

This *hapidde* fashion has gone out and of later years the *chipini* or disc worn in the left ala of the nose has become more and more fashionable (Pl. II, fig. 2). Originally the *chipini* consisted of a small disc of lead not larger than a threepenny piece, which lay on the outer surface of the ala, held in place by a stem, *hukinji*, which pierced the ala and passed into the nostril. Now the fashion is to wear a very large disc, often an inch in diameter, which itself occupies a hole in the substance of the ala of the nose; it may be flat-topped and called *chipini cha utunga* ("mushroom"), or the upper surface may often be concave, in which case it is called *chipini cha utali* (*litali*, a grain mortar). These discs are made of lead and are sometimes called *kilini*, a recent word and doubtless a corruption of "lead." Others are made of ivory, which may bear some geometric pattern on the exposed surface. A *chipini* used to cost a fowl.

Among Yao men and women, the lobule of the ear is often pierced but nothing is worn in the hole except possibly a stalk of grass.

Combs for use and for ornament are worn in the hair by both men and women. The ordinary comb without decoration is called *likwandapa*; it is made of a number of pieces 301

534

291
357

1. Musical instrument, the mapindapindi, played by Yao doctor

2. A Yao as a native servant

304

142
301

3. Specimen of scarification (Yao woman)

4. A Yao native

[End Plate 5]

142
291
531

1. A Yao girl

2. Yao girl wearing bead apron

[171]
[304]

3. Two Yao girls wearing trade cloth

4. A young Yao woman

[End Plate 6]

4: Stannus D-5 (ca. 1909)1910 FT7 Yao FT7 Maravi FR4

CIRCUMCISION AND INITIATION CEREMONIES.

Y 304 M [304]

Circumcision was not practised among Anyanja. Among Amangoche, Machinga and Yao, the practice was known as *Isyago wa Isyanda.*

Ku-umbala Isyanda:—the prepuce was drawn forward and a nick made on the right side of the median line near the frenum. An application mixed with oil was applied. At the present time the Mohammedan practice is common *Ku-umbala jando*:—the prepuce is drawn forward through a split piece of bamboo and cut off with a sharp knife.

Circumcision is performed on boys usually at the age of nine to twelve years by a medicine man called *Nganga*, an honourable calling, in a hut at the Isyago camp. Both patient and operator stand, unless the former is young, when he sits. The ceremony is witnessed only by the boy's friend. Among Mohammedans clitoridectomy used to be performed by a woman operator (*nahanga*), but, it is said, was discontinued, on account of the heavy mortality, about seven years ago. At the time of the operation a woman was given medicine to make her vomit all unlawful things she might have eaten.

Y 304 981

Initiation ceremonies (including circumcision) take place at irregular intervals. The chief or headman settles the date at which the Isyago shall be held, generally once a year in July, when there is no work and little else to do. Boys who are considered ready will then take part. The elder brother or a friend of a boy settles whether he is ready for circumcision. The mother then takes a present to the chief. The boys, their friends and the medicine man then depart for the bush, sometimes a couple of miles away from the village. The number may vary from three or four to as many as thirty or forty. In the bush grass huts (= *manse*) are erected for their shelter. Food is brought by the mothers and deposited a little way from the camp, and the friends who have accompanied the boys fetch and carry and act as sentinels to prevent approach of any "outsiders." Six months used to be spent in the bush, now four to eight weeks only, and all the circumcision wounds must be healed by the time of the candidates' return. If a boy die, the mother is not informed, she is allowed to bring food each day; at the end when the return is made rejoicing she is told by one of the men.

Y [867]

The exit from the village is accompanied by the friends dancing *Tawji* or *Mawu*, the boys in old calico (formerly always in bark cloth) walk and sit down on arrival at the place appointed. The circumcision is performed the following day; during the time which follows instruction is given them on their duties in after life as men, in good behaviour in their married life, re coitus, eating of food, superstitions regarding salt, etc. When this is all over a message is sent to the village, and the youths, walking quietly dressed in new cloths, are met half-way by the women and girls, who dance and sing; after the return to the village there is drinking and dancing, the newly initiated refraining for one day. At the present time the youth probably has some "friend" of the opposite sex with whom he sleeps; until he has had coitus he may not eat food into which salt has been put. His

Y 551 981 [836]

4: Stannus D-5 (ca. 1909)1910 FT7 Yao FT7
Marawi FR4
Ngoni FR5

M 587 765 [833] marry, his new wife would die. A widow after her period of mourning of two or three months, if sought in marriage, sends her suitor to her sister, who arranges for some other man to have coitus with the widow, after which she is ready to marry the suitor. Without this her second husband would die should she have committed adultery.

M 767 622 After the funeral of a chief the headmen of the district call the chief *Mdimbulu*, who buried the late chief, and hand him a red blanket and tell him to cover the man who is going to be chief. This he does, at the same time hitting him hard on the head. This action is received with shouting from the women, who put ashes on their heads. He then sits surrounded by his brothers and sisters at one end of the open space, the headmen at the other, the leader of whom gives a sermon.

M 766 At Chipoli on the south-west arm of the Lake the corpse is wrapped in a mat and weighted, and then sunk in the lake. The same practice is followed occasionally at Monkey Bay; it is done with the idea of avoiding interference by *Mpháti*.

Lepers and persons dying of small-pox are not bewailed; the former are thrown in the bush for *Mpháti* to eat, as it is thought the disease is spread if they be buried. A man accused of *Mpháti* and dying of *mwavi* used to be burnt on a pile of wood.

N 622 766 [*Note on Angoni.*—In the case of a chief the body was kept ten days to be sure of death; it was arranged in a sitting posture covered with cloth, the eyes open, a stream was dammed up with stones and then a pyre made below the dam and the body burnt, the waters were then let free to wash away the ashes. The new chief stood from morning to afternoon on one foot wrapped in the smoke of the pyre.]

M 195 769 In speaking of the dead the expression, "the late so and so" (*= mzimwazi . . .*), is used. A man will not refer to children that have died in the presence of his wife, as she will cry either from grief or because it is the custom so to do. Some burial grounds are not approached.

ARTIFICIAL DEFORMATIONS.

M 304 [856] At birth pressure is applied to the head of the child to reduce any deformity which may be present—no deformation is attempted. Various practices of piercing nose, lips, and ears have been and are in vogue.

M [178] Piercing of the upper lip and subsequent wearing of a thin stick, sometimes a bone (*ntowa*), until the aperture was large enough to admit a much bigger ivory or wooden lip-ring, solid or otherwise (*pelele*), was practised among the Nyanja women, but it is going out and is now seen only in the old women. Occasionally the lower lip was pierced in the same way. At the present time among the Mashinga, Yao, and many Nyasa women, the left *ala nasi* is pierced in the same way when a girl is eight years old. When adult a metal or ivory solid ring is worn (*chipini*). A woman piercing the right *ala nasi* would be laughed at and called a fool.

Y ●[304]

4:Stannus D-5 (ca. 1909) 1910 F17 Yao F17
Mbrori FR4

The piercing in the case of men is sometimes the cut of a small circular hole originally copied from the coast Swahili whose tribal mark it was, and who did it to prevent enlargement of the scrotum.[1] A small perforation of the lobule is commonly seen among the Chipeta-Angoni. These perforations are now, however, seen indiscriminately among various tribes in the country. The former I have seen in a Nyasa—it is also general among the troupes of professional dancing-boys, who wear a cord or a small stick through the ear, usually the right ear. The stick I have seen among Asenga, Nyasa, Machinga, and Ashewa. No definite earrings are worn. The habit of wearing three or four discs in the margin of the ear is only seen among coast women (Zanzibar) who have come to live in the country (Fig. 5).

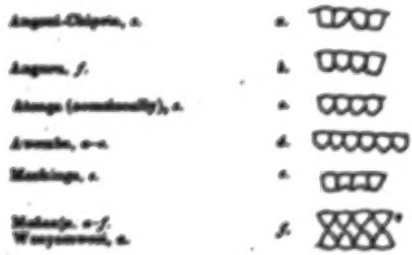

FIG. 4.

FIG. 5.

Dental mutilation was, and is to some extent, still of tribal significance, though mostly performed for appearance (Fig. 4). Actual extraction is but very seldom seen now.

A prominent breast is admired among the natives, and to secure this a cord is tied round the chest by girls, at the upper margin of the gland, with the idea of making it project. I am inclined to think it has the opposite effect. No attempts are made to elongate the breasts, they become very pendulous without any artificial aid.

Amputation of fingers and ears, castration, etc., have in the past only been practised as punishment.

Young girls by constant pulling on the *labia minora* and enclosed clitoris try to cause elongation, as such is said to be admired.

Elsewhere I have referred to the penis of natives, which I consider to be characteristic in its hardness. This is said to be caused by the "young man" purposely injuring the organ by beating it so that it never returns to normal softness when not erected.

Cicatrization.—Cicatrization is practised by both sexes of all the tribes. In former times the designs had a certain significance, such as to indicate the tribe, to signify that the wearer had been initiated, to commemorate certain events, and so

[1] This is interesting, inasmuch as the ears are pierced in England, commonly with the belief that it prevents bad eyesight.

and £30 per annum. It is profitable to carry fresh fish inland by bicycle even as far as Blantyre,[1] as the shore price to the retailer is 4s. a load, which later may fetch from 16s. to 24s.[2] Yao on the south-west lake shore grow an excellent quality rice.[3] Rice is also grown near Lake Chilwa, but is mainly sold in the market organized near the lake shore by the Agricultural Department.

Division of Labour

The man builds the house, hunts, fishes, makes the nets, baskets, grain-store, game-traps, and, in the old days, the bark-cloth. He cultivates the tobacco. He cuts down the trees and may help with the hoeing and harvesting. The woman hoes, muds the floor of the hut, sweeps, cooks, brings firewood, draws water, brews beer, makes the pots and pipes.[4]

Land Usage

There are two types of garden in the Yao areas south of Lake Nyasa: one the ordinary garden in which the staples grow, and second, gardens along the stream beds. These latter are especially valuable for providing out-of-season crops. In addition most householders have a few small plots for tobacco and ground-nuts.

The main garden is cultivated by the slash-and-burn method, common in Central Africa. The Yao, unlike the Bemba, garden occupies the whole area cleared. Burning is done just before the rainy season (October–November). The ash and soil are hoed into elongated mounds and grain is planted along the ridges. Gardens may be cultivated for more than five years. In the second and subsequent years of cultivation the stalks and weeds are piled up and burnt. There are signs of soil impoverishment. The gardens are cleared in August, and heaped to dry for burning. After the burning the seeds are planted in late November. By February and March green maize is available to supplement the diet, and by the end of April the crops are ready to be harvested. The maize is stored in wicker containers, while sorghum is stored in the huts on a stand. Cassava is planted in large mounds made by turning the turfs over, so that the roots are outside the mound and the vegetable matter inside. Legumes are planted in smaller gardens, or interplanted with the main crop. Ground-nuts are stored, after being shelled, in mud-plastered wicker containers, designed to be rat-proof. Tobacco is planted at the sides of the streams for hand-watering in the seedling stage, and then transplanted about January. The leaves are ready to be plucked about April and soon afterwards they are marketed. Sweet potatoes are planted in the rainy season, and are ready for eating in May. The stream gardens yield out-of-season crops—maize, beans, pumpkins, and also sugar-cane, which is used in the initiation ceremonies.

Craftsmanship

The Yao have few skills. All cultivation is by hoe; axes and knives are their only other technological equipment. The men make mats from reeds and palm leaf, and the women make pottery. The huts are strongly built from poles laced with bamboo and plastered with mud. The roof is thatched with grass. Under Arab influence the

[1] *Census of Native Population*, 1931, p. 26.
[2] Codrington, 1898, p. 517.
[3] Stannus, 4, 1922, p. 236; Macdonald, 1882, vol. i, p. 137.
[4] Aplin, 1931, p. 19.

2: Mitchell E-5 (1946-1949) 1956 FT7 Yao FT7

133
[10a]

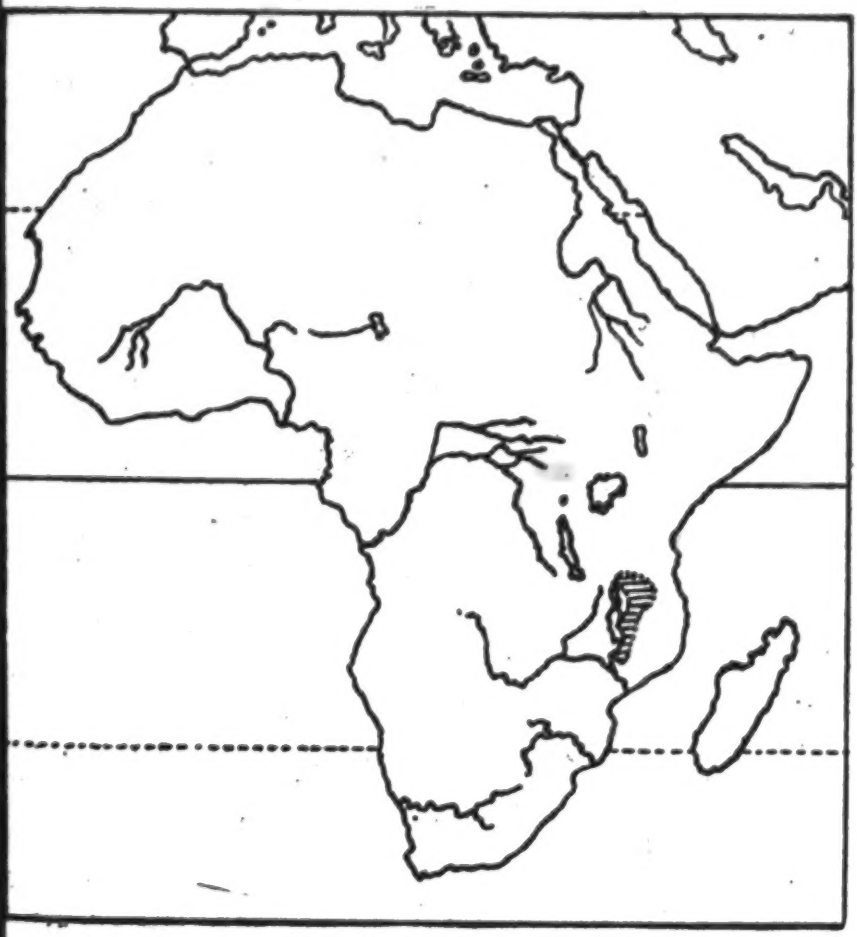

MAP I. AFRICA.
The shaded portion shows roughly where the Yao live.

human habitation. Large areas around Lake Shirwa are in fact marshlands in the wet season, and stretches of poor sandy and slightly saline soil during the dry season.

Generally speaking the distribution of surface water throughout 133
this area is variable. The highlands are on the whole well 312
supplied with streams which rise in the mountains and flow

2: Mitchell E-5 (1946-1949) 1956 FT7 Yao FT7

133 312 swiftly throughout the year. In the plains many small rivers flow quite strongly during the rainy season but dry up shortly afterwards and by July or August the water shortage becomes acute for many villages. In the rainy season plenty of shallow pools supply the wants of the people ; as these dry up the women must go farther and farther afield to find water. To the east of the watershed of the plain the distance they may have to go is still within the bounds of possibility, but on the valley lip this is no longer so,[1] and large areas of the escarpment, especially to the south towards the Shire Highlands, are unpopulated. The Administration has been sinking wells in an attempt to increase the amount of land available for human habitation. It reports that soon after wells had been sunk villages moved there and started gardens :[2] this indicates the pressure of the population on
134 the land. Within the area where most of my study was made, i.e. from the northern fringe of the Shire Highlands, agriculturalists describe the soil as ' variable '. The Agricultural Officer at Zomba, writing of this area, said :

> In the valley of the Shire the soils may be described as rich sandy alluvium. Around the hills the soil is chiefly red with a high percentage of clay and a small percentage of sand. Much of the soil in the ridge of highland stretching from the Chikala hills in the south to the hills near Mount Mangoche in the north is sandy and poor, with pockets of good rich soil here and there. The soil improves as the land slopes down each side of the ridge to the west to the Shire Valley, and to the east to the shores of Lake Shirwa and Lake Chiuta.[3]

Climate

132 The climate is the tropical monsoon type. The average annual rainfall over the years 1944–6 at the three stations, Jalasi, Nyambi and Mlomba, i.e. placed at even intervals throughout the area of study, was 41·89 inches.[4] The rainfall is slightly heavier in the higher areas. This rain falls almost entirely during the

[1] The relation of water supply to population distribution in Nyasaland is discussed by Dixey, F., ' The Distribution of the Population of Nyasaland ', *Geographical Review*, xviii (April 1928), 274 ff.

[2] *Nyasaland Protectorate Report on Native Affairs* (Zomba, 1931), 47.

[3] *Report of the Agricultural Officer, Zomba, to the Director of Agriculture* (1944), (unpublished).

[4] I am indebted to the Agricultural Officer, Fort Johnston, for this information.

2: Mitchell E-5 (1946-1949) 1956 FT7 Yao FT7

adjusts itself to the changes in its composition. At this point I wish only to indicate how the differentiation among the various segments of a matrilineage is reflected in the way the members site their huts in a village.

The Segmentary Process

The segmentary tendencies within the lineage are countered by unifying forces, but the cleavages between the lineage sections show up at the slightest provocation. Once the cleavage starts it widens rapidly and charges of sorcery become more and more frequent between the two sections until eventually one moves out to found a new village. A cleavage of this type has been developing in Cikoja village for the last eight years. When I left the field in 1949, talk of migration was in the air but it had not yet happened. I summarize the major events which led to the present situation.

The cleavage first manifested itself in 1942 when Bt. Mbwana (F2) [1] fought with her mother's younger 'sister' Ayesi (E8). These two were pounding at the same place in the village and Bt. Mbwana took Ayesi's flat sifting basket. She retained it for about four days without telling Ayesi that she had it. One day Ayesi saw it at the pounding point and asked Bt. Mbwana where she got it. They had a few words about it and Bt. Mbwana returned it and thought no more of it. She was pregnant at the time and was confined about a month later. It was her fifth child but she had a greatly prolonged labour. After labour had been going on for some hours, Cilimba (F1), her eldest brother, thought that there must be something wrong and sent his two younger brothers, Kausi (F3) and Gwili (F4) to a diviner. The diviner indicated that the cause of the difficult birth was that her 'younger mother' Ayesi was bearing her malice,[2] and advised that Ayesi should blow water from her mouth and declare that she bore no malice. Kausi and Gwili returned and went to Bt. Amisa (E4) who was Ayesi's elder sister and told her what the diviner had said. Bt. Amisa did as she was advised and fetched Ayesi to the door of the hut in which Bt. Mbwana was lying, and made her confess. The child was born immediately. After a week Cilimba and Kausi brought a complaint to the village headman Cikoja (E7). They accused Ayesi of trying to kill their sister. Cikoja sent a message to

[1] The reference numbers refer to the genealogy in Appendix D.

[2] Difficult labour is usually assumed to be due to adultery, but it may also be due to sorcery or malice. See p. 138, and Chap. VII, p. 185.

534
332

346
531
147

1. A Mohammedan mosque decorated with geometric designs of coast origin

2. A bit of Yao land

3. A spring and noose trap for small animals

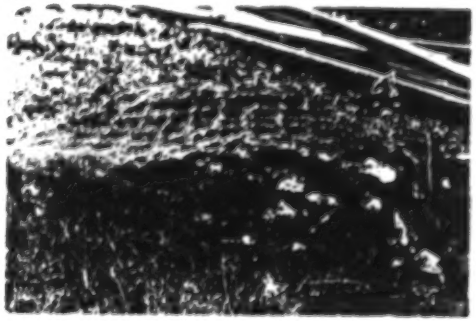

4. Granite worked with cup-holes for the game of *Bao*

[End plate 4]

3: Stannus D-5 (ca. 1912) 1922 FT7 Yao FT7

and the baskets and pots. A wooden dish *sabisi* may be seen occasionally, but of late years, this has been generally replaced by enamelled articles. 415 [177]

Around the entire hut, or simply enclosing a yard behind it, there is often a fence about five feet high. In the enclosure thus formed, many household duties are performed, such as the pounding and sifting of grain. The grain store *upakuse* often stands in this yard with the pigeon-loft and possibly a hen-house or goat kraal; these are sometimes found in the open space at the front of the house. If a grain store is built within the hut itself, it is then known as *mbungu*. Near the pigeon-loft will be seen a pole with prongs supporting an old pot with water for the pigeons to drink. In a tree in the bush nearby, there may stand a beehive, consisting of a bark cylinder. Similar cylinders are sometimes used as pigeon-houses. 361 343 [231]

The large pots for brewing beer are usually set in the yard or on the back veranda, together with a basket of split bamboo for carrying fowls, *chitetete* (Yao and Chin.). 415

Gourds. Gourds are grown in the village for use as vessels of various kinds. Different shapes serve different purposes; names are given them according to use rather than shape, though these more or less coincide. Ladles for water or beer, *mamalo* or *mpao* (*nacuaro* or *chibe*, Chin.) are usually long-handled gourds (Pl. XIV, figs. 7, 8, 9). Drinking vessels for beer, etc. *chipanda* and a specially large one, *mtumba* are usually of the shape illustrated in Plate XIV, fig. 1; sometimes they are like fig. 5, but this shape is more commonly used for water. *Lipache*, the type illustrated by fig. 2, is also used for drinking or for holding gruel. Oil flasks, *chiasi* (*tsupa*, Chin.), are usually of the double-bellied type (figs. 4 and 6). Salt bottles, *chitumba* (*chipuru*, Chin.), are similar to oil flasks. Rattles, *sanje*, used at dances etc., are also made from gourds, often from those with tuberosities (fig 3). Other uses for gourds include pipes, snuff-boxes, enema funnels, and resonators for musical instruments.

Pottery. The art of pot-making appears to have been known to the Yao for a very considerable period. There is no history relating to its introduction among them. The art is in the hands of the Yao women. As among all Nyasaland tribes, a particular kind of clay is used and no admixture with any binding substance is made. The pots are simply moulded by hand from base to brim and, without the aid of any wheel or other device, wonderful symmetry is attained. 323

After drying, the pots are fired by being set on their bases on the ground and a wood fire is made round and above them. They are then sprinkled with an infusion of the *upungwe* or *utumbi* tree, a head of millet being used for the purpose, after which the pots are set upon a fire and millet husks are thrown into them and allowed so to be incinerated. These customs, a kind of christening of the pots, " insure their turning out well."

No glaze of any kind is used, but they are sometimes coloured red by boiling with a pigment called *upuwa*, prepared from a red sediment found in sluggish streams. The preparation of *upuwa* is in the hands of men and women who make a trade of it, such as a man called

3: Stannus D-5 (ca. 1912) 1922 FT7 Yao FT7

323 N'yasi near Sombo. Sometimes pots are also rubbed all over the outside or in patterns with *mwaya*, a natural graphite.

323 531 Patterns of a simple character, often of the herring bone order, are commonly graved about the neck of the pots with the aid of a stick of bamboo. There is considerable variety in the size and shape of the pots made. As with gourds, the pot takes its name from the use to which it is put and not from the shape or size. All pots have rounded bottoms; none have a flattened base or standard.

The following varieties of pots may be mentioned:

323 415 1. *Likwala*, large pots for beer-making. These are usually roughly made and seldom have any decoration on them; they stand about two feet high and are wide-mouthed (Pl. XV, figs. 1, 4).

2. *Lwala* (*mwala*, Chin.): water-pots. These are usually well moulded and well finished pots, full bellied with broad base and a certain amount of neck. They are practically always decorated and often colored. They are about twelve inches high and twelve inches across the broadest diameter (Pl. XV, figs. 8, 9, 10).

3. *Chisbaga* (*mbale*, Chin.): cooking pots used for cooking the flour porridge, *upali*. These are wide, open-mouthed pots six to ten inches high, with belly and more or less straight sides (Pl. XV, figs. 5, 6, 7). This name also applies to the cooking vessel for medicinal concoctions.

4. *Chijwaya* (*mpika*, Chin.): smaller pots of the same type as 3, used for cooking beans, fish, green stuff, and the relish *mbaya* (*mbiwa*, Chin.) (Pl. XV, fig. 3).

5. *Mtula* (*mbata*, Chin.): the bath water pot. The smallest pot used for heating water to bathe the husband after sexual intercourse bears the same name. It is found among both the Anyanja and the Wayao (Pl. XV, fig. 2).

6. *Mbale* (Yao and Chin.): the plate, a shallow, wide-open vessel.

Baskets. The basket work of the Yao is all of one type and is done by the men. All 285 baskets are made of plaited strips of bamboo, the free edges of the strips being bound between thicker pieces of the same wood forming the rim, the binding being done with the stem of a creeper. They are made in various shapes and sizes. Some are rendered waterproof and used as beer mugs. The following types of basket are in use:

285 415 1. *Chiseke* (*kisheve*, Chin.): a circular, open basket, shallow and wide, six to ten inches in diameter; it is used as a food dish or to measure flour, etc. *Chitunga* (*nsungwa*, Chin.), a rather larger one of the same shape, often decorated with beads is used to carry flour, while a still larger basket called *chipeta* is commonly used by the women for winnowing out the chaff from the partly pounded maize (Pl. XVI, figs. 11, 15).

2. *Lukulula* and *chitunda* (in Chin., both are called *ntunga*): deep baskets usually about as deep as they are broad; the bottom is approximately square, but the rim is circular. *Chitunda* is about six inches high and six inches in diameter; *lukulula* is about a foot in all dimensions. These large baskets are used for carrying any food-stuffs in bulk, e.g. grain and pumpkins (Pl. XVI, fig. 16).

535
534
241
301

● 323
415

3. Pentecostal Church [illegible]

4. Pentecost

857
535

5. Devil's Gate Academy Oakland

6. A corner of Tent of a church

[End Plate 3]

3:Stanne D-5 (ca. 1912) 1922 FT7 Yao FT7

286 have said, to this day, and also appearing as the proper dress in all ceremonies. Clothing nowadays, among the majority, consists of calico of various kinds brought in by traders and further referred to under *Dress*.

287 Bark-cloth, *lisunde* (*chisunde*, Chin.) is made by the men. A piece of bark about two feet by one is cut from the *lring* tree; the outside portions are removed and the whole piece, after being well scraped, is soaked in water. When partly softened, it is removed and hammered out with a wooden mallet; the process is repeated till the piece of bark is soft enough to enable it to be wrung in the hands, thus further loosening the fibres. The soaking, hammering, wringing, and pulling are continued till a piece of cloth three by five feet is obtained. This is sun-dried and yields a soft, pliable, and warm material. Several pieces may be sewed together to make a large sheet. Bark-cloth is sometimes stained black by soaking it in a kind of thick mud found on the plains. The mallet consists of a piece of hard wood with serrations on its face, held in a split stick handle; it is called *nikwaru*. A log of wood with a flattened surface, called *nikwapwe*, plays the part of the anvil, the man who is using the mallet usually sitting on one end of the log.

281 Skins. The Yao are unacquainted with the art of tanning. Skins are prepared only by drying, and then softened by hammering with stones. They are not employed as articles of clothing but the larger ones are used to sit upon, the skins of the leopard and the lion being reserved for chiefs. Others are used to make bags to carry flour, for powder pouches, and to cover guns. The blacksmith's bellows are made of goat's skin.

283 String, *lukuji* (*chinpue*, Chin.): Two kinds of string are made, one from flax, the other from the inner part of the bark of the baobab tree. Fishing nets are made from the former, game nets from the latter.

326 Metals and metal working. The only metal ever obtained from the ore by the Wayao was iron, and it is probable that they learned this from the Angoni and Anyanja. The industry is now nearly dead since the introduction of trade articles. A few blacksmiths still ply their trade, but their work is restricted to the manufacture of knives, spear-heads, and razors. Hoes are no longer made. The hoe blade supplied by traders is in the form of the old native-made article, which had in turn displaced the older hoeing-stick. The blacksmith deals with his mass of metal by hammering it with stones. He provides himself with bellows, a small iron hammer, and a rudimentary kind of tongs. He is called *nandipula*.

● 324 Stone. The only important uses for stones among the Yao are for supporting the cooking pots on the fire, for heating water in some medicinal preparations, and for grinding millet. For this last purpose, a large, flat stone, inclined at an angle, is set up in some convenient spot, often on the veranda, and the grain is ground by means of a smaller stone held in the hands.

412 The flour pestle and mortar. Maize flour is prepared by pounding the grain in a [252] big wooden mortar, by means of a wooden pestle, consisting of a pole some five feet long and four inches in diameter with round ends. The mortar consists of a tree trunk about

4: Stanner D-5 (ca. 1909) 1910 FT7 Yao FT7
Mandi; FR4

Metallurgy.

Among the natives in Nyasaland, with the exception of copper in the north (Wahenga) and brass in parts near the Zambesi, iron was the only metal worked. M Y 325

Other metals now used and obtained from traders are, copper, brass, lead, tin, etc. Iron = *ukôndo*; brass = *ungali*; copper = *mkuwa*; of iron, hoes, axes, knives, spears were made.

At the present time copper- and brass-bound spears are still found at the north end of the lake; copper bracelets and body rings also. The brass wire bracelets elsewhere are made from imported metal. Iron-stone ore in the old days was smelted in a furnace of stones made in the form of a long drain 3 feet long and 1 foot high; in this a mixture of lumps of ore and wood charcoal was put, and single bellows of goats' skins were used to make the draught, which is aided by building a chimney at one end; at the other end a hole is made in the ground to receive the molten metal. A quantity of this is then again melted in a hole in the ground with a charcoal fire about it, and then the metal run into a trench to form a thin bar which is then hammered and worked into a spear, etc. At the present time little smelting of ore is done. There are regular metalworkers, who make knives, etc., using a little hearth with goat-skin bellows, a crucible for copper and brass, etc., tongs, pliers, hammer. M Y 326 M Y [501]

FIG. 13.

An iron plate with an aperture for drawing wire and files are also employed.

Bellows.—A goat's skin with a large opening sewn to two sticks; the bag is then held by these sticks and closed and pressed, the air being driven out through an iron tube inserted through one of the legs of the skin.

Boats.

The only form of boat in use is the dug-out canoe without outriggers. No skins are used. These are punted along by bamboo poles in the rivers. On the lake paddles are used, never oars. There are no sailing craft. The *mapasa* is the tree used for making canoes, sometimes also the *mkowa*. They are cut out with a small adze, *mwpa*. The *ekwe* bush is used for caulking, twenty or thirty of the stalks being rammed into the hole. *Mpiso*, a ground-creeper, is also used after being pounded. For bailing anything is used. At Likoma a vessel like a very small canoe called *upe* is employed. A kind of raft made from pith-wood and called *mapembwe* is used to fish from. Occasionally these get washed out into the lake and the fisher has been drowned. M Y 501 M 396 501

The canoes vary in size from 10 to 50 feet and more, the smaller being used as ferry-boats across a stream; the largest were made to carry slaves across the Lake Nyasa in the old days. In punting a canoe, one or two men work, keeping time. In paddling, any number may work, the largest canoes have twenty men working on either side. Down river near Zambesi the paddlers kneel; on the Lake they stand. M Y 501

1: Tew E-4 (no date) 1950 FT7 Yao FT7

342 Yao make square houses.[1] Panelled doors and glass windows, deck-chairs and palm
177 furniture are becoming more and more popular. The men wear long Moslem robes
[29] and the women are clothed in cotton. In the rural areas there are usually a few crafts-
men who still ply their trades as carpenters and blacksmiths, though the latter no
326 longer smelt, but use scrap-iron.

Labour Migration

162 Statistics are not available for the Yao of Portuguese East Africa or Tanganyika
164 Territory. Yao constitute 34 per cent. of the total population of South Nyasa district, 15 per cent. of upper Shire, 11 per cent. of Blantyre and Zomba.[2] The proportion of labour migrants in these districts was in 1937 as follows:[3]

District	*Adult males fit to work*	*Percentage of emigrants*	*Number producing economic crops*	*Number of subsistence producers*	*Emigrants not heard of since 1930*
South Nyasa .	24,230	27·1	2,912 (12%)	12,025 (49%)	873
Upper Shire .	24,673	15·9	2,555 (10%)	16,609 (67%)	255
Blantyre . .	25,330	15·6	3,788 (15%)	10,165 (40%)	986
Zomba . .	26,679	12·4	7,720 (29%)	9,040 (33%)	553

[134] South Nyasa district, which is unfertile waterless bush with a long history of famine and food shortage, has the highest proportion of labour migrants. Upper Shire, though not fertile, is more prosperous, benefiting from the tobacco- and cotton-growing industries, and from the dried-fish trade.[4]

SOCIAL ORGANIZATION AND POLITICAL STRUCTURE[5]

Kinship and Local Grouping

611 Among the Yao succession is matrilineal and marriage mainly matrilocal. Accord-
[541] ing to some informants succession formerly passed down the line of brothers, as with the Bemba, but it now passes direct to the eldest sister's eldest son, or to descendants of other sisters in order of seniority.[6] Chiefly succession follows the same rule, but the most senior may be set aside for a more suitable candidate.[7]

611 Clan names, *lukuyo*, are inherited matrilineally, and formerly designated exogamous
614 units,[8] but the marriage prohibition has now ceased to operate. Holders of the same clan name are unable to trace descent from a common ancestress, and for commoners clan names seem to have quite lost their significance; they are, however, carefully remembered in the chiefly lines and in other lines of hereditary rank, such as village headmen.

614 Within the general kinship grouping of the clan, a smaller group is recognized,
613

[1] Warner, 1906, p. 144; Macdonald, 1882, vol. i, pp. 20–2, describes a round hut.

[2] 1931 Census information is taken because the district boundaries were changed between 1931 and 1945, so that the information in the 1945 Census would not be susceptible of comparison with that given in the 1937 Survey of Male Adult Population in the *Bell Report*, Appendix A.

[3] *Bell Report*, 1938, Appendix A.

[4] Smith, 1937.

[5] Information, unless otherwise stated, is from Mitchell, and relates to south Nyasaland Yao.

[6] Johnston, 1897, p. 471; Meredith Sanderson, 1900, p. 370. Cf. Macdonald, 1882, vol. i, p. 187, who says that brothers inherit before sister's son.

[7] Ibid., p. 189.

[8] Sanderson, op. 1922, p. 236.

286 have said, to this day, and also appearing as the proper dress in all ceremonies. Clothing nowadays, among the majority, consists of calico of various kinds brought in by traders and further referred to under *Dress*.

287 **Bark-cloth**, *lisondo* (*shisondo*, Chin.) is made by the men. A piece of bark about two feet by one is cut from the living tree; the outside portions are removed and the whole piece, after being well scraped, is soaked in water. When partly softened, it is removed and hammered out with a wooden mallet; the process is repeated till the piece of bark is soft enough to enable it to be wrung in the hands, thus further loosening the fibres. The soaking, hammering, wringing, and pulling are continued till a piece of cloth three by five feet is obtained. This is sun-dried and yields a soft, pliable, and warm material. Several pieces may be sewed together to make a large sheet. Bark-cloth is sometimes stained black by soaking it in a kind of thick mud found on the plains. The mallet consists of a piece of hard wood with serrations on its face, held in a split stick handle; it is called *mbosere*. A log of wood with a flattened surface, called *mbongwa*, plays the part of the anvil, the man who is using the mallet usually sitting on one end of the log.

281 **Skins.** The Yao are unacquainted with the art of tanning. Skins are prepared only by drying, and then softened by hammering with stones. They are not employed as articles of clothing but the larger ones are used to sit upon, the skins of the leopard and the lion being reserved for chiefs. Others are used to make bags to carry flour, for powder pouches, and to cover guns. The blacksmith's bellows are made of goat's skin.

283 **String**, *lukonji* (*chinque*, Chin.): Two kinds of string are made, one from flax, the other from the inner part of the bark of the baobab tree. Fishing nets are made from the former, game nets from the latter.

326 **Metals and metal working.** The only metal ever obtained from the ore by the Wayao was iron, and it is probable that they learned this from the Anguru and Anyanja. The industry is now nearly dead since the introduction of trade articles. A few blacksmiths still ply their trade, but their work is restricted to the manufacture of knives, spear-heads, and razors. Hoes are no longer made. The hoe blade supplied by traders is in the form of the old native-made article, which had in turn displaced the older hoeing-stick. The blacksmith deals with his mass of metal by hammering it with stones. He provides himself with bellows, a small iron hammer, and a rudimentary kind of tongs. He is called *wachipala*.

324 **Stone.** The only important uses for stones among the Yao are for supporting the cooking pots on the fire, for heating water in some medicinal preparations, and for grinding millet. For this last purpose, a large, flat stone, inclined at an angle, is set up in some convenient spot, often on the veranda, and the grain is ground by means of a smaller stone held in the hands.

412 **The flour pestle and mortar.** Maize flour is prepared by pounding the grain in a
[252] big wooden mortar, by means of a wooden pestle, consisting of a pole some five feet long and four inches in diameter with round ends. The mortar consists of a tree trunk about

4: Stannus D-5 (ca. 1909) 1910 FT7 Yao FT7
Maravi FR4

METALLURGY.

Among the natives in Nyasaland, with the exception of copper in the north (Wabenga) and brass in parts near the Zambesi, iron was the only metal worked. M Y 325

Other metals now used and obtained from traders are, copper, brass, lead, tin, etc. Iron = *chitsulo*; brass = *sapuli*; copper = *mkuo*; of iron, hoes, axes, knives, spears were made.

At the present time copper- and brass-bound spears are still found at the north end of the lake; copper bracelets and body rings also. The brass wire bracelets elsewhere are made from imported metal. Iron-stone ore in the old days was smelted in a furnace of stones made in the form of a long drain 3 feet long and 1 foot high; in this a mixture of lumps of ore and wood charcoal was put, and single bellows of goats' skins were used to make the draught, which is aided by building a chimney at one end; at the other end a hole is made in the ground to receive the molten metal. A quantity of this is then again melted in a hole in the ground with a charcoal fire about it, and then the metal run into a trench to form a thin bar which is then hammered and worked into a spear, etc. At the present time little smelting of ore is done. There are regular metalworkers, who make knives, etc., using a little hearth with goat-skin bellows, a crucible for copper and brass, etc., tongs, pliers, hammer. An iron plate with an aperture for drawing wire and files are also employed. M Y 326 M Y [501]

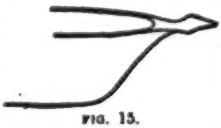

FIG. 15.

Bellows.—A goat's skin with a large opening sewn to two sticks; the bag is then held by these sticks and closed and pressed, the air being driven out through an iron tube inserted through one of the legs of the skin.

BOATS.

The only form of boat in use is the dug-out canoe without outriggers. No skins are used. These are punted along by bamboo poles in the rivers. On the lake paddles are used, never oars. There are no sailing craft. The *mugona* is the tree used for making canoes, sometimes also the *mbawa*. They are cut out with a small adze, *sompo*. The *cheo* bush is used for caulking, twenty or thirty of the stalks being rammed into the hole. *Mpisa*, a ground-creeper, is also used after being pounded. For baling anything is used. At Likoma a vessel like a very small canoe called *upo* is employed. A kind of raft made from pith-wood and called *magumbwa* is used to fish from. Occasionally these get washed out into the lake and the fisher has been drowned. M Y 501 M 396 501

The canoes vary in size from 10 to 50 feet and more, the smaller being used as ferry-boats across a stream; the largest were made to carry slaves across the Lake Nyasa in the old days. In punting a canoe, one or two men work, keeping time. In paddling, any number may work, the largest canoes have twenty men working on either side. Down river near Zambesi the paddlers kneel; on the Lake they stand. M Y 501

1: Tew E-4 (no date) 1950 FT7 Yao FT7

and £30 per annum. It is profitable to carry fresh fish inland by bicycle even as far as Blantyre,[1] as the shore price to the retailer is 4*s.* a load, which later may fetch from 16*s.* to 24*s.*[2] Yao on the south-west lake shore grow an excellent quality rice.[3] Rice is also grown near Lake Chilwa, but is mainly sold in the market organized near the lake shore by the Agricultural Department.

Division of Labour

The man builds the house, hunts, fishes, makes the nets, baskets, grain-store, game-traps, and, in the old days, the bark-cloth. He cultivates the tobacco. He cuts down the trees and may help with the hoeing and harvesting. The woman hoes, muds the floor of the hut, sweeps, cooks, brings firewood, draws water, brews beer, makes the pots and pipes.[4]

Land Usage

There are two types of garden in the Yao areas south of Lake Nyasa: one the ordinary garden in which the staples grow, and second, gardens along the stream beds. These latter are especially valuable for providing out-of-season crops. In addition most householders have a few small plots for tobacco and ground-nuts.

The main garden is cultivated by the slash-and-burn method, common in Central Africa. The Yao, unlike the Bemba, garden occupies the whole area cleared. Burning is done just before the rainy season (October–November). The ash and soil are hoed into elongated mounds and grain is planted along the ridges. Gardens may be cultivated for more than five years. In the second and subsequent years of cultivation the stalks and weeds are piled up and burnt. There are signs of soil impoverishment. The gardens are cleared in August, and heaped to dry for burning. After the burning the seeds are planted in late November. By February and March green maize is available to supplement the diet, and by the end of April the crops are ready to be harvested. The maize is stored in wicker containers, while sorghum is stored in the huts on a stand. Cassava is planted in large mounds made by turning the turfs over, so that the roots are outside the mound and the vegetable matter inside. Legumes are planted in smaller gardens, or interplanted with the main crop. Ground-nuts are stored, after being shelled, in mud-plastered wicker containers, designed to be rat-proof. Tobacco is planted at the sides of the streams for hand-watering in the seedling stage, and then transplanted about January. The leaves are ready to be plucked about April and soon afterwards they are marketed. Sweet potatoes are planted in the rainy season, and are ready for eating in May. The stream gardens yield out-of-season crops—maize, beans, pumpkins, and also sugar-cane, which is used in the initiation ceremonies.

Craftsmanship

The Yao have few skills. All cultivation is by hoe; axes and knives are their only other technological equipment. The men make mats from reeds and palm leaf, and the women make pottery. The huts are strongly built from poles laced with bamboo and plastered with mud. The roof is thatched with grass. Under Arab influence the

[1] *Census of Native Population*, 1931, p. 26.
[2] Aplin, 1931, p. 19.
[3] Codrington, 1898, p. 517.
[4] Stannus, 4, 1922, p. 236; Macdonald, 1882, vol. i, p. 137.

1: Tew E-4 (no date) 1950 FT7 Yao FT7

342 Yao make square houses.[1] Panelled doors and glass windows, deck-chairs and palm
177 furniture are becoming more and more popular. The men wear long Moslem robes
[29] and the women are clothed in cotton. In the rural areas there are usually a few crafts-
men who still ply their trades as carpenters and blacksmiths, though the latter no
326 longer smelt, but use scrap-iron.

Labour Migration

162 Statistics are not available for the Yao of Portuguese East Africa or Tanganyika
464 Territory. Yao constitute 34 per cent. of the total population of South Nyasa district, 15 per cent. of upper Shire, 11 per cent. of Blantyre and Zomba.[2] The proportion of labour migrants in these districts was in 1937 as follows:[3]

District	*Adult males fit to work*	*Percentage of emigrants*	*Number producing economic crops*	*Number of subsistence producers*	*Emigrants not heard of since 1930*
South Nyasa .	24,230	27·1	2,912 (12%)	12,025 (49%)	873
Upper Shire .	24,673	15·9	2,555 (10%)	16,629 (67%)	255
Blantyre . .	25,330	15·6	3,788 (15%)	10,165 (40%)	986
Zomba . .	26,679	12·4	7,720 (29%)	9,040 (33%)	553

[134] South Nyasa district, which is unfertile waterless bush with a long history of famine and food shortage, has the highest proportion of labour migrants. Upper Shire, though not fertile, is more prosperous, benefiting from the tobacco- and cotton-growing industries, and from the dried-fish trade.[4]

SOCIAL ORGANIZATION AND POLITICAL STRUCTURE[5]

Kinship and Local Grouping

611 Among the Yao succession is matrilineal and marriage mainly matrilocal. Accord-
[591] ing to some informants succession formerly passed down the line of brothers, as with the Bemba, but it now passes direct to the eldest sister's eldest son, or to descendants of other sisters in order of seniority.[6] Chiefly succession follows the same rule, but the most senior may be set aside for a more suitable candidate.[7]

611 Clan names, *lukoryo*, are inherited matrilineally, and formerly designated exogamous
614 units,[8] but the marriage prohibition has now ceased to operate. Holders of the same clan name are unable to trace descent from a common ancestress, and for commoners clan names seem to have quite lost their significance; they are, however, carefully remembered in the chiefly lines and in other lines of hereditary rank, such as village headmen.

614 Within the general kinship grouping of the clan, a smaller group is recognized,
613

[1] Werner, 1906, p. 144; Macdonald, 1882, vol. i, pp. 20–2, describes a round hut.

[2] 1931 Census information is taken because the district boundaries were changed between 1931 and 1945, so that the information in the 1945 Census would not be susceptible of comparison with that given in the 1937 Survey of Male Adult Population in the *Bell Report*, Appendix A.

[3] *Bell Report*, 1938, Appendix A.

[4] Smith, 1937.

[5] Information, unless otherwise stated, is from Mitchell, and relates to south Nyasaland Yao.

[6] Johnston, 1897, p. 471; Meredith Sanderson, 1920, p. 370. Cf. Macdonald, 1882, vol. i, p. 187, who says that brothers inherit before sister's son.

[7] Ibid., p. 189.

[8] Stannus, 4, 1922, p. 236.

CHAPTER III

THE COMPOSITION OF MODERN CHIEFDOMS

Chiefdoms in the Administrative Mould

361 NO less than in MacDonald's time, modern chiefdoms are in the first place organizations of villages. Physically, the villages consist of solid pole and daub huts of varying sizes. Some huts are rectangular, twenty feet long and fifteen feet wide, [342] with glass windows, panelled doors, and thatched roofs. Others are small and round, about eight feet in diameter. There is also a considerable variation in the compactness of villages: often the huts are only a few yards apart, but sometimes at least a hundred yards or more. Most villages, however, could be circumscribed by a circle of a quarter-mile diameter, though, of course, there are many exceptions. There is a slight tendency for the village to spread itself along a path, in a way faintly suggesting ribbon development, but on the whole there is no particular physical pattern to the Yao village. In fact, though most villages have fairly distinct physical boundaries, and are definitely discrete clusters of huts, some are difficult to identify in this way. To the minds of the local people, however, the 621 village is quite clear and distinct. This is because they see the village primarily as a social unit, and tend to impute into physical boundaries more definition than actually exists. It is in the social sense that I use the word here: the 'village' is a spatial group which recognizes its identity against similar groups.

The importance of the village in Yao structure can hardly be over-emphasized. Membership of a village provides the first index whereby people determine a stranger's background. If, after village membership is fixed, no other links can be found with a stranger, such as distant kinship, the relationship will remain at that level. A gossip identifies the person about whom 621 he is speaking by giving his or her name and the name of his 551 or her village. He says, 'Bt.[1] Mwana of Cigwaja village'.

[1] I use this abbreviation for the Arabic 'binti', 'daughter of'. Binti, pronounced 'biti' by the Yao, with Ali and Wadi, 'son of', appear commonly in Yao names.

2: Mitchell E-5 (1946-1949) 1956 FT7 Yao FT7

695
342
516

PLATE IV

A dispute in settlement at Chiwalo's hut. The assessor is sitting under the veranda behind the pole. A village headman can just be discerned in the shade under the veranda. The commoners sit in the sun.

(*October 1948*)

[facing p.56]

2: Mitchell E-5 (1946-1949) 1956 FT7 Yao FT7

361
342

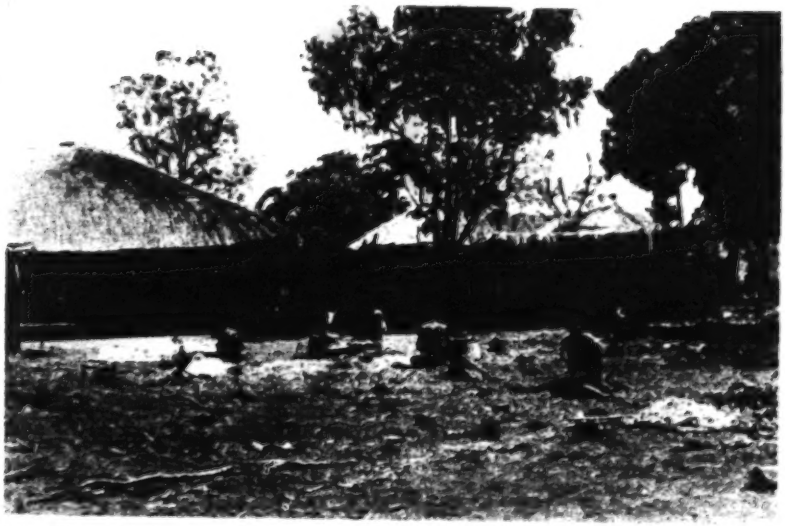

(*a*) Women of a matrilineage preparing cassava together. A scene in a village in Malemia's area.
(*September 1949*)

342
343

(*b*) A hut in Ali Kasunka village (Bt. Ntuwa's hut, i.e. hut number 3 in the diagram in Appendix B). In the foreground are grainbins.
(*September 1948*)

PLATE VIII

[Facing p. 140]

2: Mitchell E-5 (1946-1949) 1956 FT7 Yao FT7

578 613 622 adult son, went to Walusa one day and borrowed a chicken. Some days afterwards Walusa asked for payment for the chicken. Ali Cibwana took offence at the way in which Walusa asked for payment and told him so. Walusa remarked that Ali Cibwana was insolent and insisted on the payment for the chicken. Ali Cibwana now said that if his father's brother insisted on asking in this rude way he would not be paid back at all. The tempers of the two men became more and more frayed until at last Walusa threw Ali Cibwana to the ground. When Sanudia, Ali Cibwana's younger brother, saw this he grabbed up a stick and came up to Walusa and asked him why he had thrown his elder brother down. Walusa had hardly time to answer before Sanudia had struck him. At this Walusa's younger brothers joined in the fight. Mpakata now rushed up and started to support his sons against his younger brothers. When Mpakata's sisters and sisters' daughters, who were pounding, heard this, they took up their pounding pestles (poles about five feet long and three inches in diameter) and came running to Mpakata's younger brothers' assistance. When Mpakata saw these women coming with their poles he dashed into his house and emerged with a stick with which he defended himself. The noise and clamour had by this time attracted a number of strangers from a nearby village and they were able to pacify Mpakata's villagers. The matrilineal relatives of Mpakata gathered in one part of the village and Walusa told them they ought to leave. They decided, nevertheless, 'to say goodbye'[1] to Kaumbwe, who was a perpetual elder brother of Mpakata. Kaumbwe called in an unrelated village headman named Idi, and they held a meeting in the village the next day.

The dispute was discussed in the presence of the arbitrator. Walusa said he wished to leave the village with his sisters. Idi, however, told him that he should not do this but that they should take the matter up to Chiwalo's court. On an agreed day Mpakata and his children and matrilineal relatives went to Chiwalo's court where the case was arbitrated on by Capola who lived near to Mpakata. He found Mpakata guilty and ordered him to pay 10*s*. to Walusa. At the same time he told Walusa that he was not to take the female members of the matrilineage away from the village. And there the matter rested.

A village headman in Yao 'binds the village',[2] and when the village is made up of linked groups as well as his matrilineal kin,

[1] Ostensibly to say goodbye but in fact to air their grievances.

[2] *Akutawa musi*. The word *kutawa* may also mean to build. Yao houses are built by binding poles together with ropes and then filling the gaps with mud.

[342]

361
342
351

(*a*) Part of a village in Namwera area. The distinct group of huts on the right is not related to those in the left-hand corner, but is only one section of the village.

(*October 1948*)

(*b*) A slightly different view of the same part of the village. The fence encloses the grainbin, kitchen and latrine.

(*October 1948*)

PLATE IX

[facing p. 206]

CHAPTER VIII

THE VILLAGE THROUGH TIME

IN order to present my analysis of the internal structure of Yao villages and of the position of the village in the social structure as a whole, I have given static pictures of villages at particular moments of time. But it should be clear that this description of the enduring social relationships, which appear as a static social structure, is abstracted from a series of on-going processes in which certain social relationships appear as repetitive elements. 621

In reality villages are constantly changing. Their personnel is replaced, their internal lineage composition changes, and they change their sites from chiefdom to chiefdom. It is perhaps easiest to visualize these changes, and the way they affect the structure, by viewing them in terms of the slow ontogenetic development of villages. Villages pass through a cycle which leads from their inception, through internal differentiation out of a larger group, to final break-up through their own differentiation, and the resumption of their original simple form.

Let us consider the typical life history of a hamlet which has just moved into a particular area. It is composed of four or five huts belonging to the daughters of one woman. The mother herself may be alive, as an old woman and very probably a widow. The daughters are adults and have with them their husbands and children. The hamlet settles down to its life in its new area. The warden of this sorority-group probably lives some miles away and the women have to send the older children to call him when they need his help. As the daughters of the [591] women grow up, young men come to marry them. Each couple may start to live in the girl's mother's kitchen at the back of the hut. In time the husband builds a hut next door to the [342] hut of his mother-in-law. Yao huts as a rule are made from pole and daub and they last from five to ten years. White ants eat the poles away and the thatch always leaks a little in very wet weather. The winds and the rains erode away the plaster.

539

"*Lokoto lokoto kondo ka!*"
"Picking up picking up a little basket full!"

to which the listeners exclaim

"*Lokoto!*"
"Overflows!"

At the completion of each sentence in the story, one of his listeners will exclaim, "Go!" When he has finished his story, he says,

"*Ajiskola katuka katukuunga panitwe yakuwere, uuko chipungili!*"
"Take off the fire, the little mouse lest it be singed, by the head it is very hard, the hair (is) in a lump!"

During the intervals of a long story, one of the listeners may break in and sing some little song, such as the song of the *mbendu* in the story of the greedy man, thus giving the story-teller a rest.

The house and household utensils. The Yao house does not differ greatly from the
●342 Nyanja habitation which I have already described elsewhere.[1] The accompanying figure (Pl. XIV, fig. 15) gives the circular plan of a hut with a veranda partly open and partly enclosed to form a room. The central pole of the hut is indicated, the hearth (H), the position of the sleeping mats (M), and the place where the water pots are kept (P). The
352 bed may be a bamboo platform supported by forked sticks a foot above the ground (*usanguuli*), or a dais of mud, over which is spread the sleeping-mat, upon. (Pl. XIV, fig. 14.) Seats, *chilungu*, are made of logs of wood with conveniently placed branches acting as legs. I have seen a symmetrically carved log with shaped legs all in one piece, which suggested by its form and by the presence of a button on the midline of the under surface that it was made in the imitation of an animal. Plank seats with peg legs are now sometimes seen. Wooden pegs are driven into the wall and serve to hang odd articles upon.

[359] The hearth is simply a shallow depression in the mud floor, around which are placed three large stones to support the cooking pots. Sometimes a canopy is built over the hearth, consisting of four upright poles supporting a platform made of reeds and grass, upon which millet and other seed grains are often stored. From this platform *lipulu* (*tsanjo*, Chin.), the gourd containing the supply of salt is often hung. The seed grain tied up in
[251] little bundles is suspended from the *lipulu* where it becomes very dry and smoked, without any ill effect to the next year's crop. (Pl. XIV, fig. 16.) Four pronged branches of trees are often stuck in the ground with a string tied around the prongs, and used as holders for gourds, salt bottles, etc.; this device is called *lipanda* (*pkanda*, Chin.). (Pl. XIV, fig. 10.)
415 The smaller utensils include the porridge stirring stick *mtiko* (Yao and Chin.) (Pl. XIV, fig. 12), several wooden spoons *chikuni* (*chipanda* or *nanaiwa*, Chin.), (Pl. XIV, figs. 11, 13), a number of gourds of various shapes and sizes used as ladles and drinking vessels,

[1] 'Notes on some tribes of British Central Africa,' op. cit., p. 339-[illegible].

2: Mitchell E-5 (1946-1949) 1956 FT7 Yao FT7

361
342

(a) Women of a matrilineage preparing cassava together. A scene in a village in Malemia's area.
(*September 1949*)

342
343

(b) A hut in Ali Kasunko village (Br. Ntowo's hut, *i.e.* hut number 3 in the diagram in Appendix B). In the foreground *ser* grainbins.
(*September 1949*)

PLATE VIII

[Facing p. 140]

3:Stanner D-5 (ca. 1912) 1922 FT7 Tao FT7

and the baskets and pots. A wooden dish *ubisi* may be seen occasionally, but of late years, this has been generally replaced by enamelled articles.

Around the native hut, or simply enclosing a yard behind it, there is often a fence about five feet high. In the enclosure thus formed, many household duties are performed, such as the pounding and sifting of grain. The grain store *ngulwe* often stands in this yard with the pigeon-loft and possibly a hen-house or goat kraal; these are sometimes found in the open space at the front of the house. If a grain store is built within the hut itself, it is then known as *mbunga*. Near the pigeon-loft will be seen a pole with prongs supporting an old pot with water for the pigeons to drink. In a tree in the bush nearby, there may stand a beehive, consisting of a bark cylinder. Similar cylinders are sometimes used as pigeon-houses.

The large pots for brewing beer are usually set in the yard or on the back veranda, together with a basket of split bamboo for carrying fowls, *chikhuku* (Yao and Chin.).

Gourds. Gourds are grown in the village for use as vessels of various kinds. Different shapes serve different purposes; names are given them according to use rather than shape, though there more or less coincide. Ladles for water or beer, *mwamdo* or *mpao* (*mwamo* or *chiko*, Chin.) are usually long-handled gourds (Pl. XIV, figs. 7, 8, 9). Drinking vessels for beer, etc, *chipondo* and a sparsibly large one, *mtumbu* are usually of the shape illustrated in Plate XIV, fig. 1; sometimes they are like fig. 5, but this shape is more commonly used for water. *Lipombo*, the type illustrated by fig. 2, is also used for drinking or for holding grain. Oil flasks, *chimsi* (*mwpo*, Chin.), are usually of the double-bulbed type (figs. 4 and 5). Salt bottles, *chikumbu* (*chipuru*, Chin.), are similar to oil flasks. Rattles, *ungu*, used at dances etc., are also made from gourds, often from those with tuberosities (fig 3). Other uses for gourds include pipes, snuff-boxes, mortar funnels, and resonators for musical instruments.

Pottery. The art of pot-making appears to have been known to the Yao for a very considerable period. There is no history relating to its introduction among them. The art is in the hands of the Yao women. As among all Nyanjaland tribes, a particular kind of clay is used and no admixture with any binding substance is made. The pots are simply moulded by hand from base to brim and, without the aid of any wheel or other device, wonderful symmetry is attained.

After drying, the pots are fired by being set on their bases on the ground and a wood fire is made round and above them. They are then sprinkled with an infusion of the *mpumpu* or *mtumbi* tree, a bowl of millet being used for the purpose, after which the pots are set upon a fire and millet husks are thrown into them and allowed to be incinerated. These customs, a kind of christening of the pots, " insure their turning out well."

No glaze of any kind is used, but they are sometimes adorned red by boiling with a pigment called *ngumu*, prepared from a red sediment found in sluggish streams. The preparation of *ngumu* is in the hands of men and women who make a trade of it, such as a man called

4: Stanner D-5 (ca. 1909)1910 F27 Tao F27
Maruyi FR4
Njoni FR5

only implement used. Sowing is done after the first rains, about November; the harvest takes place in May to July. Gardens are at varying distances from the villages, depending partly on the soil becoming exhausted after years of cultivation. Boundaries are marked by leaving a line of uncultivated ground, sowing a line of a different crop, tying knots in the young crops at intervals, ditches, etc. In starting a new garden, woodland is often taken; the trees are cut down, leaving stumps 3 feet high; the undergrowth is cleared away and burnt, the ashes distributed over the land, which is then hoed, really very superficially; the earth is then made up into little heaps with a central hole in each, after the first rains four or five grains of the cereal (maize, millet) are dropped in each and covered with earth; as the young shoots grow the hole is more and more filled in.

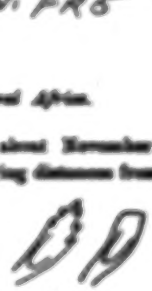

Fig. 6.

With the cereal is planted the seed of peas, beans, pumpkins, the former on coming up then grow up the maize stalks. The seed is last year's product and not specially selected.

Depredations among crops made by elephant, hippopotamus, large antelope (eland and kudu), pigs and baboons, vary in extent in different districts. Little grass huts are built, raised above the ground like a pile-dwelling, in which watchers are stationed. Fences, sometimes extending for miles, are built. The gardens of the chief are hoed by his slaves or the people of the village. Maize is collected in the cob, and after the outer coverings have been removed is stored; so is the sheaves, millet in the head; beans and peas are stored in baskets. Medicine is put on the ground to ensure a good crop, and a piece of stick is sometimes hung up for good luck.

Cattle, etc.

The keeping of cattle is practically restricted to certain tribes living in districts free from tsetse-fly (Angoni, Wankonde); among these people wealth is reckoned by cattle. The milk is little used; the flesh is eaten only when an animal dies. Marks of ownership are made by cutting the ears (Fig. 6). Cattle are kept in open kraals by Angoni, in a compartment of their houses by Wankonde; they are tended by the small boys as a rule. Goats and sheep are kept all over the country. Castration of cattle is a recognized practice (*bufula*).

Angoni make their shields from cattle skins; their spear handles are covered with goat hair (*lusoli*); hair anklets and armlets in dancing costume are made from goat hair. Skins are used as drum to a small extent.

Hunting.

A man intimates to the community around that he is making a hunt by slashing a boy of about ten years in leaves, who precedes him and the man from his own village through adjacent villages; at each village the lad has to lie down and

2: Mitchell E-5 (1946-1949) 1956 FT7 Yao FT7

622 neglect neither his sorority-group nor the husbands in his village,[1] that his sorority-group and his village were his garden and he must take care of the young plants in it. The husbands were the watchmen who look after the women in the village. A headman dare not take sides or be unfair, nor must he talk behind people's backs. He must take care to settle differences amicably by discussion at meetings. They advised him not to pay too much attention to his wives who may have quarrelled with his sisters and tell him that they have been insulting him. When he hears a report like that he may be unfair to his sisters and people will say that he has broken his village through listening to nonsense. This sort of instruction went on through the night.

On Friday when the beer was brewed, Mlamba and Mbalwe, both headmen and perpetual sons of Nyambi, came to the village [344] and told the men to build a small grass shed for the successor to sit in. This the men did, and the women were told to plaster it and clean the huts out for the strangers who would be coming to the ceremony. On Saturday morning before cockcrow, Makoka and Ncimba got up and told the women to cook a big pot of porridge because they were taking Cimombo to bathe and when they returned they would want to find porridge ready. [415] Makoka took some medicine called *mkulumo* in a bark container (*likungwe*) into the toilet enclosure. He put the medicine into [751] two jars of water and told Cimombo to wash himself in it daily as he was an important headman, and it would strengthen his body.[2] After Cimombo had washed he went back into the hut 622 where a mat was spread on the floor and on it were a dish of 266 porridge and three dishes of relish. Makoka and Ncimbo told him to take a little porridge, dip it into one of the relishes—whichever he chose—and eat it. Cimombo did so. They did not tell him that one of the dishes contained human flesh.[3] When he tried the dish of human flesh he vomited and all the villagers cried with joy, saying that he was a good chief because he had

[1] *Mbumba jao ni chamwini wao*—the meaning and significance of this in the village context is explained on p. 183.

[2] This is a euphemism for protective medicine against sorcery.

[3] The immediate question is: Where did the human flesh come from? No informant could tell me and I am inclined to believe that one of the dishes is 'ritually' made into human flesh for this ceremony. This special ceremony was always spoken about as if it were secret, especially from White people.

2: Mitchell E-5 (1946-1949) 1956 FT7 Yao FT7

The chief identifies a man who comes to see him in exactly the same way, and the Administration has adopted a similar system, except that it has its own definition of the village. During the initiation ceremonies, the initiands[1] are housed in long grass sheds which are subdivided into sections. Each section or room of the long shed houses the boys or girls from one village. If villages share a burial ground, they have allotted portions where they bury their dead separately. In these and many other ways the village is looked upon by the Yao as a distinct unit in the chiefdom.

The chiefdom in the old days was distinctly a territorial unit and all the villages within that area recognized the superiority of the chief. The boundaries of the old chiefdoms were marked by rivers and hills and fixed after conquest and agreement. They are still well remembered. Modern chiefdoms are defined in their limits partly by Government decree and partly by custom. When Principal Headmen were appointed, the districts under them were demarcated with 'due regard being given to the composition of the Native population'. The traditional areas under the various chiefs, therefore, were recognized by the Administration as districts, so that the districts or their sections almost coincided with the chiefdoms. Some disputes between chiefs over boundaries have occurred from time to time and the Administration has had to arbitrate. For example, the Provincial Commissioner of the Southern Province reported a difference between Liwonde and Kawinga in 1936,[2] but through time these differences have been eliminated.

Traditional and Administrative boundaries do not coincide in a few places, for two reasons. Firstly, the Administration has accepted an obvious and physical boundary in preference to an indistinct and social boundary. It has taken the Domasi River as the boundary between Ntumanje and Mposa, though in fact a few villages under Mbela, Kawinga III's son, live on the south side of the river, and fall for Administrative purposes in Ntumanje's area. Mbela is still very strongly associated with Kawinga in ritual and kinship matters. His dealings with the

[1] I am grateful to Prof. Schapera for suggesting this word for those who are undergoing initiation ceremonies. The parallel is with graduands, i.e. those who are undergoing graduation ceremonies.

[2] *Report of the Provincial Commissioner, Southern Province* (1936), 20.

2: Mitchell E-5 (1946-1949) 1956 FT7 Yao FT7

554 These headmen who are the centres of local social structure
622 are the higher headmen that MacDonald mentions.[1] Many of
692 them to-day are the descendants of the traditional councillors (*ndunu*) who were sent out to the extremities of the chiefdoms to be the outer governors in these areas.[2] Their villages are social centres in that many disputes are taken to these important headmen before they are taken to the Native Authority's court. For example, the dispute between the women of Nampeya and Cikuwita was taken to Ntibwilibwi.[3] The chief usually orders headmen to assemble at the villages of important headmen when he has directions to issue to them. Very frequently the Administrative officers camp there for the night on their tours and call
554 the headmen in to them for conference. The placing of mosques
622 at the villages of these important headmen also indicates their significance as social centres. Most Moslem villages have small
● 346 mosques which the more devout use for the morning and evening prayers during Ramadan only. At the villages of important headmen larger mosques have been built and these are used for the midday prayers on Fridays (*jumu*), when most of the Moslems in each area assemble in their best clothes for communal prayers. Large brick mosques have been built at the court villages of Jalasi, Liwonde and Kawinga. There are other large mosques at the villages of chieftains such as Chiwalo, Chamba, Mposa, and of important headmen such as Kangomba, Nyenje and many others. These chiefs and headmen were all Invaders and are, as I shall show later, almost by definition Moslems. They are also headmen of high rank so that the placing of the mosque, and the other features of local social structure, are largely derivatives of the system of ranking.

554 Rank therefore underlies the structure of local areas as well as the structure of the chiefdoms as wholes. It is, as I show later,
622 closely associated with the historical origin of the headmen. Yet the correlation is not perfect and I shall show that other factors tend to militate against the fixed historical ranking of headmen. Nevertheless, the principle of primacy is the most impoetant single factor.

[1] See Chap. II, p. 36.
[2] See Chap. IV, pp. 92-3.
[3] See Chap. V, p. 130.

3:Stanmus D-5 (ca. 1912) 1922 FT7 Yao FT7

against all evils — witchcraft, attack by lions, etc. The *akamusi* then set about building shelters in which the *wali* will remain during their term of instruction. According to the number of the *wali* so the number of places where shelters are built may vary from one, two or three, to as many as eight. Each of these places is called *Ndapala*. They may be many miles apart and are so placed for the convenience of the mothers in various groups of villages who bring the food daily to the group of boys from those villages. 881 [346]

The boys when they originally left the village were wearing a large bark-cloth covering, with beads and collars, which latter articles have been taken by the *m'michila* and his assistants. At *Ndapala* they wear simply a loin-cloth of bark.

During their stay at *Ndapala*, the *wali* are given animal names by the *akamusi* who carry on the instruction of the boys until their return to *Lupanda*, the *m'michila* having gone back to his village immediately after the circumcision. The names given to the boys are commonly names of beasts of prey such as Alikule (*likule* = the jackal), Achisuwi (*chisuwi* = the leopard), etc. [553] [551]

Certain restrictions as to diet are laid upon the *wali* by the *m'michila*, e.g. no meat of an animal killed by a beast of prey, no mudfish, *likumbala*. He will not allow any villager to visit *Ndapala* after seven P.M. and visitors may only be men who have been through the ceremony. An uninitiated man is called *mbalala*, one who has not been to his *Unyago*. 881 262

Other restrictions as to foodstuffs may be made by the *akamusi*, generally in connection with the mythical origin of such food substances. A finger-shaped yam called *lipeta* is taboo, as it is said to have first sprung from the grave of a leper, the inference being obvious. After the *Unyago*, the boys have to undergo a special doctoring before they may partake of them. Bananas and rice are similarly refused them, the latter on account of a story to the effect that rice grew from the nostrils of a dead man, the idea doubtless having relation to the resemblance of rice grains to maggots. Fish is denied them by some masters of ceremonies, as it is said to have originated from the diaper of a woman which she threw away while bathing. [825]

Each *m'michila* may have special observances of his own. One near Zomba caused all cassava to be roasted in a certain way. Rows of pieces of cassava were placed in split bamboo splits and so roasted before the fire in the manner of fish. If roasted in the ordinary way, the cassava would split and show the white floury material inside, signified by the verb *ku-lapala*. If this is eaten by the *wali*, it is said that the preputial wound would reopen. [252]

The length of time spent at *Ndapala* varies from four weeks to as long as three or four months. In the first place they must wait till the circumcision wounds of all are completely healed. Delay may be occasioned by complications having arisen in some cases. Again, permission to return may be withheld by the chief for some reason or other. Should one of the *wali* die at *Ndapala*, the body is buried out in the bush and nothing is said to the parents until after the ceremonies are over and all have returned to the village. 881 [766]

3: Stannus D-5 (ca. 1912) 1922 FT7 Yao FT7

524
322

2. A SIT OF YAU LAND

4. GRANITE WORKED WITH CUP-HOLES FOR THE GAME OF *Bao*

346
531
177

1. A MOHOMMEDAN MOSQUE DECORATED WITH GEOMETRIC DESIGNS OF COAST ORIGIN

3. A SPRING AND SNARE TRAP FOR SMALL ANIMALS

[End Plate 4]

7: Hetherwick M-5 (ca. 1900) 1902 FT7 Yao FT7

present fortunes. But it is to the human soul after death, when it is considered as having an influence on the lives and fortunes of those it has left behind in the world and consequently as a power to be propitiated and honoured, that the term *mulungu* is more strictly applied. Freed from the body it passes to *mulungu*, and there is regarded as endowed with powers which it never possessed when alive on earth. To pray to such a spirit is described as *kulomba mulungu*, to worship *mulungu*, never *kuoba* in this case. Such *mulungu* worship enters largely into Yao religious or social life. In almost every Yao village there will be found a shrine which is the centre of the worship of the inhabitants. It consists of a carefully built hut enclosed within a strong grass fence or hedge of a species of cactus plant. The hut itself is built of the usual native materials—the walls of wooden posts, bamboos, and strong reed grass bound together with bark-rope and plastered over with clay or stiff mud. The roof is of grass laid on a framework of bamboos, and is generally covered with long strips of white or coloured calico. On the ridge or apex of the roof are fixed a couple of flags or an umbrella or two. One wall is usually left open so that the interior is easily seen. Within, from the bamboo rafters are suspended handkerchiefs, cloths, bunches of beads, etc., all offerings to the *mulungu* of the dead headman or chief from his friends and relatives. The floor is of clay carefully smeared with sand in native fashion. A raised platform or mound of earth in the centre marks the spot where the grave was made. The *awilo* or officials who preside at the funeral obsequies, first dug for about 8 or 10 feet down in a perpendicular direction, and then on the western side of this well they hollowed out a shallow cave in the earth. In this the body was placed, laid on its side with the knees bent up under the chin, and the face turned towards the east. Various articles of personal property were next placed beside the corpse, clothes, ivory, guns, axes, hoes, etc., and the mouth of the cave closed up with wooden posts and a strong reed mat. The grave was then filled in and the surface carefully finished as we have seen. At the head of the mound a native pot was fixed in the ground for the reception of the offering of beer which is an almost invariable accompaniment of any act of worship paid to the *mulungu* of the dead.

Such a shrine marks the grave of almost every Yao chief or headman, and is regarded as the abode of his soul or the spot where his *mulungu* is most accessible. If his successor is about to undertake a long journey or enter on any warlike expedition against an enemy or neighbour, he must first *kutaga mbepesi*, place an offering here to secure the favour and assistance of the *mulungu* of the dead. Should a long-continued drought endanger the prospects of the grain crop, the departed chief must be solicited to send the lacking rain. A feast is first prepared, almost always of beer, sometimes with the addition of native porridge, fowl, or game. The worshippers gather round the shrine bringing part of the food which they have prepared. Their priest for the occasion is the successor of the dead chief, sometimes one or other of the *awilo* who placed the body in the grave, or it may be that any other near relation of the dead man is chosen to represent the people and act as their spokesman. The nearer the relationship the more influence will he have with the dead.

2: Mitchell E-5 (1946-1949) 1956 FT7 Yao FT7

622 robes (a gown not unlike a woman's dressing-gown), wears a
554 bright-coloured turban, and has one or two men walking behind
292 him, he is a rather important village headman. One particular item of clothing in the Kawinga, Liwonde and Nyambi areas, is the scarlet headband which some village headmen may wear. I shall discuss this later in the context of the competition of village headmen for rank.

622 Another external characteristic of rank, which seems to have
554 disappeared with the changing economic structure of Nyasaland,
411 was the carrying of knives (*nsinjo*) by important village headmen. Previously, status was indicated by the type and size of knife carried in public. The chief usually carried the largest and most ornate. The knife taken from Kawinga on his surrender in Portuguese East Africa was about 18 inches long and had a decorated ivory handle. Smaller knives of similar pattern belonged to his headmen.[1] Nowadays, many young commoners carry knives two or even three feet long, made from the broken blades of motor-car springs.

622 The right of important village headmen to build fences[2] at
554 the back of their huts is also a mark of prestige which seems to have lost its significance. About 50 years ago only important
● 351 headmen had the right to erect a fence at the back of their huts.
[567] This fence, made of tall grass about six feet high, enclosed the grain stores and other food supplies of the household and formed a private compound in which the headman's wife and slaves carried on their daily tasks.[3] It seems likely that private compounds and slavery were positively associated, so that only the important village headmen who had many slaves found it necessary to build fences. All chiefs and most important headmen to-day still erect these fences. Those who hold initiation
[881] rights are obliged to build them because, when the initiands return from the seclusion phase of the initiation ceremony, they are supposed to spend one night in the headman's private compound before going back to their villages. But nowadays, minor village headmen and commoners also frequently build these

[1] See f.n. 4, Chap. II, p. 38.

[2] *Lutenje*, pl. *ndenje*. The enclosed space or 'compound' is *cimbundi*. Typical hut compounds are depicted on Plate IX (*a*) and (*b*), facing p. 206.

[3] MacDonald suggests that the common term *kusyeto* for woman is derived from the adverb *kusyeto*—on the other side (of the fence).

2: Mitchell E-5 (1946-1949) 1956 FT7 Yao FT7

 622

compounds, especially in areas where there are man-eating lions,[1] 554
so that it is no longer an infallible indicator of the hut-owner's 351
rank.

Minor village headmen always allow their superiors to sit on 622
a chair. If village headmen of commensurate status are present, 554
chairs may be sought for them all. But a minor village headman 576
never occupies a chair, even if one is available, in the presence of his superior. At a meeting, for example, a chief occupies a chair and so may his most important *nduna* or councillor. The more important headmen sit alone on separate mats, for a man only shares a mat with his equals, and then only rarely. Junior headmen, however many there are, have to try to squeeze themselves on to one mat or squat on the ground.

Important headmen also have the right of walking in front of their juniors. If there are three or four headmen returning from, say, a court case, they arrange themselves in the pathway in an order which reflects their rank. As they file down the narrow field paths the leader is the most senior among the group. After him come the other headmen and last of all the commoners. This order of precedence is also followed when initiands pass through the tribal initiation ceremonies. The sisters' sons and other matrilineal descendants of important headmen precede those of the less important headmen. At Chiwalo's hut also, I [695] have noticed that the more important headmen sit under the verandah while listening to private cases. The less important headmen sit with the commoners under a shelter or out in the sun.

I have been discussing the visible marks of prestige. But high 622
rank also tends to carry with it some other privileges which are 554
not immediately observable. The most obvious is Government 648
recognition. I have already mentioned that under the 1912 Ordinance, village headmen were recognized by the Administration. These Administrative village headmen, who had certain duties to perform, were paid a small annuity and were in earlier days given a 'book' in which the tax payments could be recorded. To-day, the Yao still describe Government recognition as 'having a book'. Administrative village headmen derived more benefit from Government recognition than merely an

[1] The huts in Plate IX (*a*) and (*b*) are in Namwera area where there are man-eating lions. Most huts have compounds. A large proportion of huts in areas where there are no lions also have compounds.

2: Mitchell E-5 (1946-1949) 1956 · FT7 Yao FT7

361
342
351

(*a*) Part of a village in Namwera area. The distinct group of huts on the right is not related to those in the left-hand corner, but is only one section of the village.

(*October 1948*)

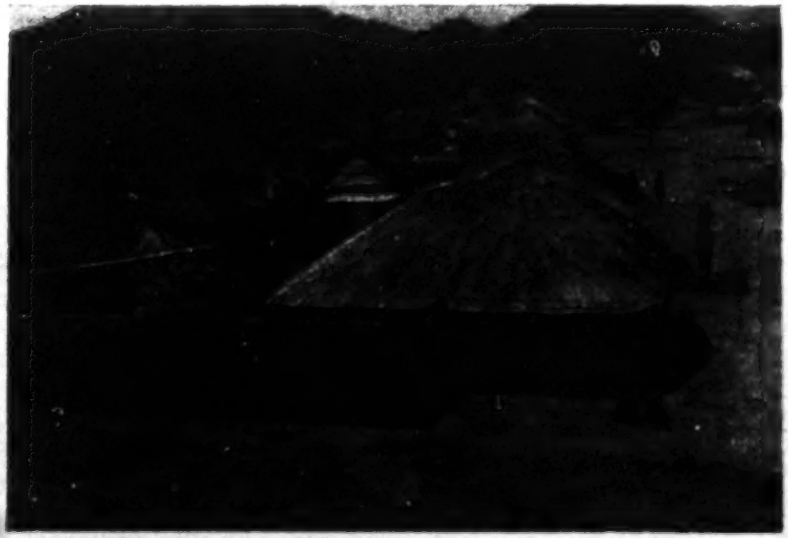

(*b*) A slightly different view of the same part of the village. The fence encloses the grainbin, kitchen and latrine.

(*October 1948*)

PLATE IX

[facing p. 206]

3: Stannus D-5 (ca. 1912) 1922 FT7 Yao FT7

and the baskets and pots. A wooden dish *mbisi* may be seen occasionally, but of late years, this has been generally replaced by enameled articles. 415 [177]

Around the entire hut, or simply enclosing a yard behind it, there is often a fence about five feet high. In the enclosure thus formed, many household duties are performed, such as the pounding and sifting of grain. The grain store *ngolwe* often stands in this yard with the pigeon-loft and possibly a hen-house or goat kraal; these are sometimes found in the open space at the front of the house. If a grain store is built within the hut itself, it is then known as *mbungu*. Near the pigeon-loft will be seen a pole with prongs supporting an old pot with water for the pigeons to drink. In a tree in the bush nearby, there may stand a beehive, consisting of a bark cylinder. Similar cylinders are sometimes used as pigeon-houses. 361 343 [231]

The large pots for brewing beer are usually set in the yard or on the back veranda, together with a basket of split bamboo for carrying fowls, *chitetete* (Yao and Chin.). 415

Gourds. Gourds are grown in the village for use as vessels of various kinds. Different shapes serve different purposes; names are given them according to use rather than shape, though these more or less coincide. Ladles for water or beer, *macomalo* or *mpao* (*nacomero* or *chiko*, Chin.) are usually long-handled gourds (Pl. XIV, figs. 7, 8, 9). Drinking vessels for beer, etc. *chipanda* and a specially large one, *mtumba* are usually of the shape illustrated in Plate XIV, fig. 1; sometimes they are like fig. 5, but this shape is more commonly used for water. *Lipache*, the type illustrated by fig. 2, is also used for drinking or for holding gruel. Oil flasks, *chiasi* (*tempa*, Chin.), are usually of the double-bellied type (figs. 4 and 6). Salt bottles, *chitumba* (*chigwu*, Chin.), are similar to oil flasks. Rattles, *sanje*, used at dances etc., are also made from gourds, often from those with tuberosities (fig 3). Other uses for gourds include pipes, snuff-boxes, enema funnels, and resonators for musical instruments.

Pottery. The art of pot-making appears to have been known to the Yao for a very considerable period. There is no history relating to its introduction among them. The art is in the hands of the Yao women. As among all Nyasaland tribes, a particular kind of clay is used and no admixture with any binding substance is made. The pots are simply moulded by hand from base to brim and, without the aid of any wheel or other device, wonderful symmetry is attained. 323

After drying, the pots are fired by being set on their bases on the ground and a wood fire is made round and above them. They are then sprinkled with an infusion of the *nyumyao* or *utumbi* tree, a head of millet being used for the purpose, after which the pots are set upon a fire and millet husks are thrown into them and allowed so to be incinerated. These customs, a kind of christening of the pots, "insure their turning out well."

No glaze of any kind is used, but they are sometimes colored red by boiling with a pigment called *ngomo*, prepared from a red sediment found in sluggish streams. The preparation of *ngomo* is in the hands of men and women who make a trade of it, such as a man called

539 "*Lokolo lokolo kwale ko!*"
"Picking up picking up a little basket full!"

to which the listeners exclaim

"*Lokolosi!*"
"Overflowed!"

At the completion of each sentence in the story, one of his listeners will exclaim, "Go!" When he has finished his story, he says,

"*Ajikolo kololo kolokwanga pawiwo yakwawo, wuko chipungi!*"
"Take off the fire, the little mouse lost it he singed, by the head it is very hard, the hair (is) in a bunch!"

During the intervals of a long story, one of the listeners may break in and sing some little song, such as the song of the cobwebs in the story of the greedy man, thus giving the story-teller a rest.

342 The house and household utensils. The Yao house does not differ greatly from the Nyanja habitation which I have already described elsewhere.[1] The accompanying figure (Pl. XIV, fig. 18) gives the circular plan of a hut with a veranda partly open and partly enclosed to form a room. The central pole of the hut is indicated, the hearth (H), the position of the sleeping mats (M), and the place where the water pots are kept (P). The
352 bed may be a bamboo platform supported by forked sticks a foot above the ground (*mwapwali*), or a dais of mud, over which is spread the sleeping-mat, *upwa*. (Pl. XIV, fig. 14.) Seats, *chimyu*, are made of logs of wood with conveniently placed branches acting as legs. I have seen a symmetrically carved log with shaped legs all in one piece, which suggested by its form and by the presence of a button on the midline of the under surface that it was made in the imitation of an animal. Plank seats with peg legs are now sometimes seen. Wooden pegs are driven into the wall and serve to hang odd articles upon.

[359] The hearth is simply a shallow depression in the mud floor, around which are placed three large stones to support the cooking pots. Sometimes a canopy is built over the hearth, consisting of four upright poles supporting a platform made of reeds and grass, upon which millet and other seed grains are often stored. From this platform *lipulo* (*mwaja*, Chin.), the gourd containing the supply of salt is often hung. The seed grain tied up in
[251] little bundles is suspended from the *lipulo* where it becomes very dry and smoked, without any ill effect to the next year's crop. (Pl. XIV, fig. 16.) Four pronged branches of trees are often stuck in the ground with a string tied around the prongs, and used as holders for gourds, salt bottles, etc.; this device is called *lipondo* (*phondo*, Chin.). (Pl. XIV, fig. 10.)
415 The smaller utensils include the porridge stirring stick *ntilo* (Yao and Chin.) (Pl. XIV, fig. 12), several wooden spoons *chikwai* (*chipondo* or *nwandowa*, Chin.), (Pl. XIV, figs. 11, 13), a number of gourds of various shapes and sizes used as ladles and drinking vessels,

[1] 'Notes on some tribes of British Central Africa,' op. cit., p. [illegible]

415

352
354

14, Carved vessels; 10-12, Wooden utensils; 14, Bed; 15, Hut plan; 16, Hearth with fire-spade

[End Plate 14]

4:Stannus D-5 (ca. 1909) 1910 FT7 Tao FT7
Marovi FR4
Ngoni FR5

whole frame-work is secured by bark lashings, the walls, inside and out, and the floor are plastered with mud from an ant-hill, mixed with a little cow dung, if possible. In some houses the walls do not reach up to the roof, leaving a space through which smoke may escape and air enter. M 342

At Chipoli and at Mangoche houses were built on piles and in trees respectively to avoid lions. A house is occupied by a man and his wife and any young children; no other relations are allowed to sleep there. The children, when aged about five years, go to live with the maternal grandmother till their first *ingapo*; there may be from a dozen or more children living with the grandmother, who feeds them and sometimes also provides clothing. Such children are said not to have coitus with each other as they are relations. After *ingapo*, if not married, the girls go to live again at their grandmother's house, the boys to the *ujumbe* or *banda*, four to ten or more using such a house as a dormitory. They get their food from the grandmother, visit her and may use her utensils, sit on her bed, but never so with their mother. M 342 592 M 592 [334]

In houses where there are partitions or verandah rooms these smaller rooms are often used as bed chambers, and always as store rooms for baskets, pots, hoes, etc. The native usually sleeps on a mat laid on the ground; in some cases the ground is raised into a kind of dais (Angoni and at Mangoche). Among Yao and many Mahanje, wooden beds are now used, introduced from the coast. The Angoni make wooden stools from conveniently shaped branches (Fig. 10). The native has so few belongings that he makes nothing in the way of shelves, nor hooks for hangings. Clothes are stored in baskets. The hut is kept swept and all refuse deposited on a dust heap near the hut. M 592 592 M [312] [312] M [336]

FIG. 10.

The doorway is closed by a door made of reeds and grass bound together. This is placed against the inside of the doorway, and a pole dropped in between two sets of supports. In the day time the door often rests against a fifth support. There are no windows and the smoke finds its way out through the roof thatch. A guest house (*bwalo*) with benches (*chimbendi*) round it used to be found in villages, but does not exist any longer. M 342 M [349]

There are no ceremonies connected with the building of a house or the preparation of the materials for its construction. There are no household gods. The fire must be in the middle of the hut, and on one side is the bed. Any people visiting the hut must remain on the opposite side of the fire, except "friends," and on no account must children go round to the other side, because under the bed the woman's diapers are laid to dry. The fire must not be touched by the male children, but is tended by the girls. The fire is generally kept burning continuously, but it is of no consequence if it goes out—a burning branch is brought from a neighbouring hut. At the death of a headman or other person in the village all fires are extinguished, fresh fire is then made in the dead man's house and from this passed from hut to hut. There is only one method of making fire, that is, the fire stick. M 354 [379] M [348] [371]

539

"Lakato lakato lomilo ka"
"Picking up picking up a little basket full?"

to which the listeners assisten

"Lakatoa!"
"Overflowed!"

At the completion of each sentence in the story, one of his listeners will assisten, "Ooi!" When he has finished his story, he says,

"Ajikolo kololo kolokoonga gaanlao gaiwaoro, ooilo ahangaji!"
"Take off the fire, the little mouse lost it to stupid, by the hand it is very hard, the hole (is) to a hangi!"

During the intervals of a long story, one of the listeners may break in and sing some little song, such as the song of the ostrich in the story of the greedy man, thus giving the story-teller a rest.

342 The house and household utensils. The Tao house does not differ greatly from the Wyanja habitation which I have already described elsewhere.[1] The accompanying figure (Pl. XIV, fig. 10) gives the circular plan of a hut with a veranda partly open and partly enclosed to form a room. The central pole of the hut is indicated, the hearth (H), the position of the sleeping mats (M), and the place where the water pots are kept (P). The

352 bed may be a bamboo platform supported by forked sticks a foot above the ground (*ooangwadi*), or a skin of meat, over which is spread the sleeping-mat, upon. (Pl. XIV, fig. 14.) Seats, *shimaya*, are made of logs of wood with conveniently placed branches acting as legs. I have seen a symmetrically carved log with shaped legs all in one piece, which suggested by its form and by the presence of a hollow on the midline of the under surface that it was made in the imitation of an animal. Plank seats with peg legs are now sometimes seen. Wooden pegs are driven into the wall and serve to hang odd articles upon.

[339] The hearth is simply a shallow depression in the mud floor, around which are placed three large stones to support the cooking pots. Sometimes a canopy is built over the hearth, consisting of four upright poles supporting a platform made of reeds and grass, upon which millet and other seed grains are often stored. From this platform *lipala* (*lemoja*, Chin.), the gourd containing the supply of milk is often hung. The seed grain tied up in little bundles is suspended from the *lipala* where it becomes very dry and smoked, without any ill effect to the next year's crop. (Pl. XIV, fig. 16.) Four pronged branches of trees are often stuck in the ground with a string tied around the prongs, and used as holders for gourds, milk bottles, etc.; this device is called *lipanda* (*ghanda*, Chin.). (Pl. XIV, fig. 10.)

659

415 The smaller utensils include the porridge stirring stick *ratile* (Tao and Chin.) (Pl. XIV, fig. 12), several wooden spoons *ahiwoi* (*ahipanda* or *nanaiwoo*, Chin.), (Pl. XIV, figs. 11, 13), a number of gourds of various shapes and sizes used as bailer and drinking vessels,

[1] "Notes on some tribes of British Central Africa," op. cit., p. [illegible]

2: Mitchell E-5 (1946-1949) 1956 FT7 Yao FT7

621 When a villager died in pre-White days, the hut and personal effects were destroyed. Nowadays, with the improving type of [768] dwelling, which frequently includes well-timbered doors and glass-windows, huts are treated with medicine to cleanse them of the harmful effects of the death and they are used again. But [356] all houses must be repaired continually if they are to remain habitable. Eventually most houses fall beyond repair and new houses must be built. The women pull the poles out of the ground and use them for firewood and the site is planted with pumpkins or maize by the nearest relative.[1] A new hut site is then chosen according to the wishes of the owners. As a rule outsiders are neutral about this, and a village member selects a site in accordance with his or her social position in the village. The women still stay near their mother, but they may build on the outside fringe of a group of huts. When the mother's house collapses she may in turn build her hut on the outside fringe of the group near her daughter's hut. In this way the spatial distribution of the huts gradually comes to reflect the segmentation of the lineage.

621 As the woman's daughter's children grow up and marry, the woman's son persuades his wife's relatives to allow him to take 591 his wife to live in his home village. If he is a polygynist he usually takes the senior wife, but he may take the other or others as well. His own daughters now marry uxorilocally in the village if their mother is still alive. If the parents live long enough their daughter's daughters in turn marry and build their huts there. A crisis comes when either the man or his wife dies. The children have to decide whether to stay where they are or to move back to their own matrilineal village. If they do stay at their father's village they form the nucleus of a patrilaterally-linked group. As they grow older the senior male of their matrilineage may come to live with them. Through the years while this internal differentiation is developing within the village, the huts are decaying and being rebuilt. While new hut sites are being selected the physical form of the village is reflecting the continuing social differentiation.

621 At the same time gardens are being planted and crops reaped each year. The soil in the first garden sites has probably been 361 depleted already and is either lying fallow or is under cassava. 166

[1] Usually the name-heir of a woman, i.e. her daughter's daughter.

534

291
357

304

192
301

[End Plate 5]

2: Mitchell E-5 (1946-1949) 1956 FT7 Yao FT7

102
361

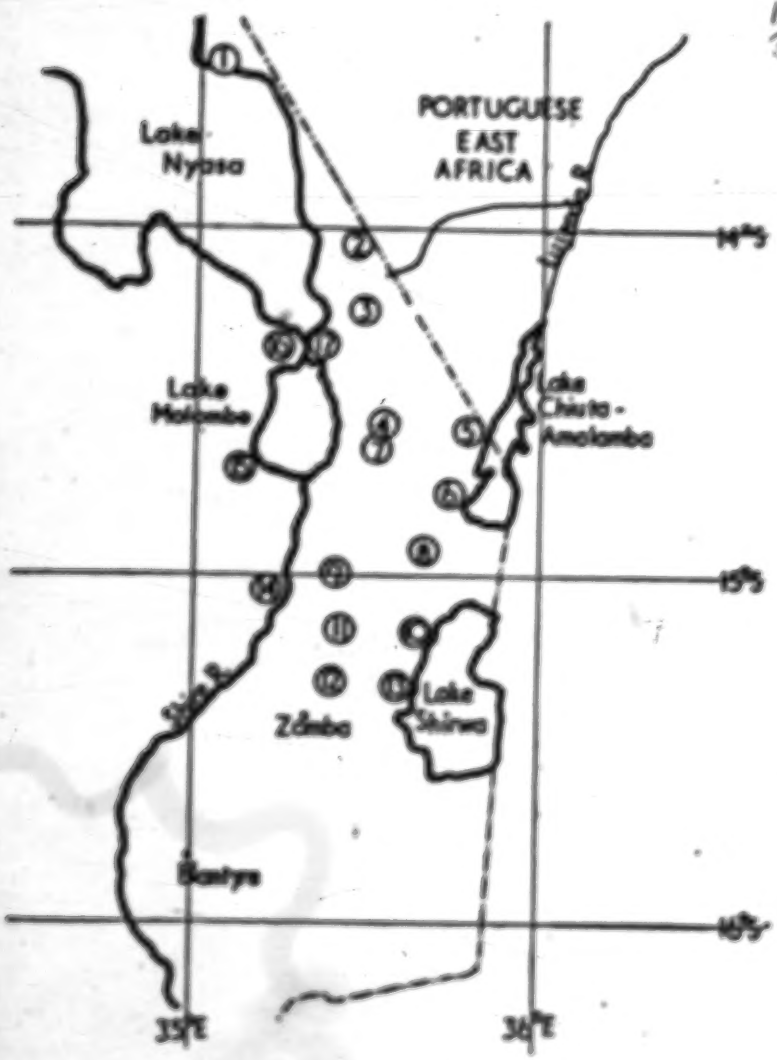

MAP II. SOUTHERN NYASALAND.

Showing the positions of Machings and other Chiefs.

1. Mdangila (Mawanga)
2. Kwadi (Chief)
3. Jalasi (Machinga)
4. Mpondi (Machinga)
5. Mgalawa (Mpondo)
6. Chikwewo (Mpondo)
7. Chiwindi (Machinga)
8. Kawinga (Machinga)
9. Liwonde (Machinga)
10. Mpeta (Machinga)
11. Chimbulu (Machinga)
12. Mabuzi (Machinga)
13. Mwanaje (Machinga)
14. Mwanala (Machinga)
15. Kalembo (Machinga)
16. Mpondo (Machinga)
17. Nankhumba (Nyanja)

[p. 15]

2: Mitchell E-5 (1946-1949) 1956 FT7 Yao FT7

175 567 621 648 therefore, be weakened, and the component parts of the village scattered. This is what the Administration argued when it wrote about the split-up of communities: 'This tendency is to some extent gratifying, in that it originates in the native's sense of his complete security under the existing Government.'[1] I have not much evidence that this is true, and in fact do not think it is. Second, there is little doubt from my village histories that the slave-groups attached to various village headmen were deserting their former masters and setting up independent villages.

175 361 621 648 It is significant that the report speaks of the 'old large communities'. Duff MacDonald, writing of the Blantyre area in the period 1877–81, says: 'Usually the natives live in small villages containing 10 or 11 huts, occasionally in large villages containing three times as many. They do not like to pack themselves closely. In time of peace few villages contain more than 100 people.'[2] Hynde, writing of the Domasi area, says: 'Sometimes a village consists only of five or six huts; more commonly twelve or twenty and rarely above thirty. The chief's village at Domasi consists of more than 100 houses but that is an exceptional case. The villages occur at intervals of quarter to one mile.'[3] In July 1895, the Collector at South Nyasa made a census of all the villages on the west bank of the Shire (64 villages). These were mainly Yao, but also included some Nyanja. The modal size of villages, calculated from his published figures, is 26 huts.[4] The reports of MacDonald and Hynde agree well, although they describe different areas. The Collector's average was slightly larger, but one is not sure that he has not included two or three settlements under one headman. A village, Changali, was marked as having 217 huts, but a note indicated that they were scattered. Also the numerical accuracy is not above question because a large proportion of hut totals end in 0 or 5, indicating estimation rather than enumeration. From my own observation, the arithmetic mean of a sample of 37 villages in two separate areas was 11 huts (mode was 8 huts).

It seems, therefore, that the optimum size for Yao villages has always been about 10 to 15 huts, and that the disintegration

[1] *Annual Report of the Territory, 1911–12*, Murray, *Handbook*, 128.
[2] MacDonald, *Africana*, i, 145.
[3] Hynde, R. S., 'Among the Machinga People'.
[4] *B.C.A. Gazette*, ii, 3 (Sept. 1895).

2: Mitchell E-5 (1946-1949) 1956 FT7 Yao FT7

noted by the Administration in 1904 was in fact the break-up of larger communities under important village headmen. These communities were, as is evident from MacDonald's writings, largely made up of slaves and their descendants. In the light of the internal structure of modern villages, I believe that the fragmentation going on at that time was due to the breaking of the bond between captor and slave—a bond formerly reinforced by physical sanctions that included the killing of a slave by his captor. Therefore, while the groups thus linked to the headman may have moved out of his village, his matrilineal kinsmen, who were bound to him by bonds of deep sentiment and religious beliefs, remained. The irreducible 10 to 15 huts were therefore likely to have been those of the headman's own matrilineal kinsmen. When the Administration ascribed the continuing tendency all over the Protectorate to the splitting up of villages into small family groups [1] it was probably describing the splitting off of descendants of slave-wives to found villages of their own. While this process of readjustment was going on, the Administration stepped in with legislation designed to control what it considered to be unchecked social disorganization. The Administration spoke of the necessity to

175 361 621 648

175 621 648

> build up an organization to control the rising generation of natives who, finding themselves without the restraining influences to which their parents were accustomed, have of recent years evinced an inclination to emancipate themselves from the disciplinary responsibilities of village life and obedience to authority, and to adopt habits prejudicial to native family life.[2]

To accomplish this task the Government introduced the District Administration (Natives) Ordinance of 1912. This was the Ordinance about which the Administration wrote in 1913:

> Framed, as it has been, in accord with native ideas and practice, it is a measure which none the less avoids the defects of the archaic system of tribal rule and which has as its aims the gradual formation of a subsidiary local government by means of Sectional Councils of Headmen chosen as far as possible by natives themselves and presided over by the District Resident.[3]

---

[1] *Annual Report, 1911–12*, Murray, *Handbook*, 128.
[2] *Annual Report on the Protectorate for 1912–13*, Murray, *Handbook*, 129.
[3] Murray, *Handbook*, 129.

2: Mitchell E-5 (1946-1949) 1956 · FT7 Yao FT7

361
133

(*a*) Villages on the floor of the Rift Valley near Fort Johnston.
(*December 1949*)

(*b*) A village in the Domasi Valley near Zomba.
(*September 1949*)

PLATE III

[facing p. 46]

2: Mitchell E-5 (1946-1949) 1956 FT7 Yao FT7

CHAPTER III

THE COMPOSITION OF MODERN CHIEFDOMS

Chiefdoms in the Administrative Mould

361 NO less than in MacDonald's time, modern chiefdoms are in the first place organizations of villages. Physically, the villages consist of solid pole and daub huts of varying sizes. [342] Some huts are rectangular, twenty feet long and fifteen feet wide, with glass windows, panelled doors, and thatched roofs. Others are small and round, about eight feet in diameter. There is also a considerable variation in the compactness of villages: often the huts are only a few yards apart, but sometimes at least a hundred yards or more. Most villages, however, could be circumscribed by a circle of a quarter-mile diameter, though, of course, there are many exceptions. There is a slight tendency for the village to spread itself along a path, in a way faintly suggesting ribbon development, but on the whole there is no particular physical pattern to the Yao village. In fact, though most villages have fairly distinct physical boundaries, and are definitely discrete clusters of huts, some are difficult to identify in this way. To the minds of the local people, however, the 621 village is quite clear and distinct. This is because they see the village primarily as a social unit, and tend to impute into physical boundaries more definition than actually exists. It is in the social sense that I use the word here: the 'village' is a spatial group which recognizes its identity against similar groups.

The importance of the village in Yao structure can hardly be over-emphasized. Membership of a village provides the first index whereby people determine a stranger's background. If, after village membership is fixed, no other links can be found with a stranger, such as distant kinship, the relationship will remain at that level. A gossip identifies the person about whom 621 he is speaking by giving his or her name and the name of his 551 or her village. He says, 'Bt.[1] Mwana of Cigwaja village'.

[1] I use this abbreviation for the Arabic 'binti', 'daughter of'. Binti, pronounced 'biti' by the Yao, with Ali and Wadi, 'son of', appear commonly in Yao names.

2: Mitchell E-5 (1946-1949) 1956 FT7 Yao FT7

361
342

(*a*) Women of a matrilineage preparing cassava together. A scene in a village in Malemia's area.
(*September 1949*)

342
343

(*b*) A hut in Ali Kasunka village (Bt. Ntuwa's hut, i.e. hut number 3 in the diagram in Appendix B). In the foreground are grainbins.
(*September 1948*)

PLATE VIII

[Facing p. 140]

2: Mitchell E-5 (1946-1949) 1956 FT7 Yao FT7

593 611 sisters are the points of cleavage in the matrilineage and the group of uterine sisters is seldom divided, unless their daughters are old enough to form a corporate group and to move off with their mother to found a new village under their brother.

The Spatial Representation of Lineage Segmentation

361 613 621 The segmentation of the matrilineage is also shown in the spatial distribution of the huts in a village. The daughters of the women of the matrilineage set up their huts near to their mothers', and as this continues over a number of years, the internal segmentation of the matrilineage is automatically reflected in the disposition of huts. Most Yao villages will show this spatial representation of social distance, some more clearly than others. The clearest example I have is in Meni section of Majaja village, Nyambi's area. The disposition of the huts is set out in the village plan in Appendix C. Here are five fairly distinct groups of huts in the village. Four are descendants of four uterine sisters, the children of the previous Majaja. The space between these four groups is cleared and paths reticulate among the huts. About 200 yards away, the fifth group is out of sight of the others and must be reached by a path leading through the fields. In this cluster of huts live the children of the uterine brother of the four sisters. The matrilineal relatives of Majaja live about half a mile away in a quite distinct cluster.

In Cikoja village the same principles are at work but the situation is somewhat obscured by the number of patrilaterally-linked relatives. A glance at the village plan in Appendix D shows that the major segments, denoted by the symbols Ma and Mc in the plan, are quite distinct in the old village site, the huts of Ma being separated from those of Mc by a broad path and by a patch of bamboos. In the new village site across the stream the same general segmentation is shown where the two sections, Ma_1 and Ma_2, are separated by a path.[1] The separation of the clusters of huts is difficult to represent on a diagram because not only are the huts placed in discrete clusters, but they face in towards one another and the space between them is kept clean. Between the clusters there may be rubbish heaps and small garden patches. I describe later how the village continually

[1] I describe how this section of the village came to be across the river on p. 169.

2: Mitchell E-5 (1946-1949) 1956 FT7 Yao FT7

 361

adjusts itself to the changes in its composition. At this point I wish only to indicate how the differentiation among the various segments of a matrilineage is reflected in the way the members site their huts in a village. 613 621

The Segmentary Process

The segmentary tendencies within the lineage are countered by unifying forces, but the cleavages between the lineage sections show up at the slightest provocation. Once the cleavage starts it widens rapidly and charges of sorcery become more and more frequent between the two sections until eventually one moves out to found a new village. A cleavage of this type has been developing in Cikoja village for the last eight years. When I left the field in 1949, talk of migration was in the air but it had not yet happened. I summarize the major events which led to the present situation. 613 578

The cleavage first manifested itself in 1942 when Bt. Mbwana (F2) [1] fought with her mother's younger 'sister' Ayesi (E8). These two were pounding at the same place in the village and Bt. Mbwana took Ayesi's flat sifting basket. She retained it for about four days without telling Ayesi that she had it. One day Ayesi saw it at the pounding point and asked Bt. Mbwana where she got it. They had a few words about it and Bt. Mbwana returned it and thought no more of it. She was pregnant at the time and was confined about a month later. It was her fifth child but she had a greatly prolonged labour. After labour had been going on for some hours, Cilimba (F1), her eldest brother, thought that there must be something wrong and sent his two younger brothers, Kausi (F3) and Gwili (F4) to a diviner. The diviner indicated that the cause of the difficult birth was that her 'younger mother' Ayesi was bearing her malice,[2] and advised that Ayesi should blow water from her mouth and declare that she bore no malice. Kausi and Gwili returned and went to Bt. Amisa (E4) who was Ayesi's elder sister and told her what the diviner had said. Bt. Amisa did as she was advised and fetched Ayesi to the door of the hut in which Bt. Mbwana was lying, and made her confess. The child was born immediately. After a week Cilimba and Kausi brought a complaint to the village headman Cikoja (E7). They accused Ayesi of trying to kill their sister. Cikoja sent a message to 613 578 845 683

[1] The reference numbers refer to the genealogy in Appendix D.

[2] Difficult labour is usually assumed to be due to adultery, but it may also be due to sorcery or malice. See p. 138, and Chap. VII, p. 185.

2: Mitchell E-5 (1946-1949) 1956 FT7 Yao FT7

Other Types of Village Structure

621 Linked groups in most villages are connected by patrilateral
571 ties, but other kinsmen, or even unrelated persons, are also found in villages. I have been describing essentially the organization of groups. Some kinsmen do in fact come to live in villages because of personal links to the headman or some other villager. If a man or woman does this, he or she usually has a single hut which is placed close to his or her kinsman. If the person lives in the village long enough a related group may grow up around him or her, and when the children reach adulthood this group will become internally organized and corporate in its dealings with the other groups in the village. But this seldom happens, because the ties to the resident kinsman are usually too weak to hold the children, or the causes which drove the founder of the new group out of his or her original village have disappeared. Children may leave a village with their mother because she was accused of being a sorceress, and go to live in the village where her brother is married. When she dies, or the incident is forgotten, they may go back to their matrilineal village. For example, Bt. Mkwinda of Cikoja village ran away with her husband after her child was supposed to have been bewitched by her mother. But her children, as they grew up, came back to marry in the village of origin, or at least to contract marriages near it. In Chiwalo's, Nyambi's and Kawinga's areas, where I have recorded most genealogies of villages, I found few people who were neither matrilineal- nor patrilaterally-linked relatives. In Malemia area, which is nearer Zomba, the situation was
621 somewhat different. The dominant matrilineage- and patrilater-
571 ally-linked groups of the typical Yao village were still quite easily
361 discernible. But there were other related and unrelated groups and huts in the villages. An example of this is Citenjele village,[1] on the north boundary of Malemia's area. There the main village contained the following huts:

Dominant matrilineage	22
Groups linked through present headman	5
Hut linked through present headman's brother	1
Groups linked through previous headman	5
Groups linked through previous headman's brother	4
	37 huts

[1] See also 'An Outline of the Social Structure of Malemia Area', 36–40.

2: Mitchell E-5 (1946-1949) 1956 FT7 Yao FT7

About 250 yards to the north-west is a single hut belonging to the sister of the husband of one of the present headman's daughters. In the middle of the group on the road is a single hut of a woman who has no connections in the village at all. Her husband works in a mission garden about a mile away. About 100 yards from the north-east edge of the main block is a group of 4 huts which are unrelated to Citenjele, but which had joined him about 25 years ago before he had moved into Malemia area. About 250 yards farther to the north-east there are 2 huts owned by the daughters of the sister of the wife of a man who had married one of the female members of the dominant matrilineage. Due east about half a mile away, there is a group of 6 huts which are owned by Yao. These are unrelated groups and are under Citenjele as Administrative Village Headman, but they are for all intents and purposes separate villages.

There are other types of villages. For example, in Namwera area I found a village composed of a number of unrelated sections. The huts of each could quite easily be distinguished from those of other sections though they were built very close to each other in some parts of the village. Each section was built up on exactly the same pattern as other Yao villages—that is, there was a dominant matrilineage and sometimes some patrilaterally-linked huts. Each section had its own leader who concerned himself with its internal affairs. He, nevertheless, recognized the authority in general of a village headman, who lived in one of the sections of the village. He was the Administrative Headman for the village and he was the first to come into the area. All the other sections had had to ask him for land when they had moved into the area. His authority was confined to his duties as Administrative Headman though he was much respected and the sections called him in regularly as an arbitrator in their affairs. But if the chief called all village headmen to the court, the leaders of the various sections went as well, so that he was not in fact their representative to outside authority in all situations. The relationships between the various sections, therefore, were very much like those between village headmen in Kawinga's area. The only difference seemed to be the amount of physical concentration of the huts.

I tried to find out why these sections lived so close to one another. My informants told me that there were many men away at labour centres and it was necessary to build the huts

361
342
351

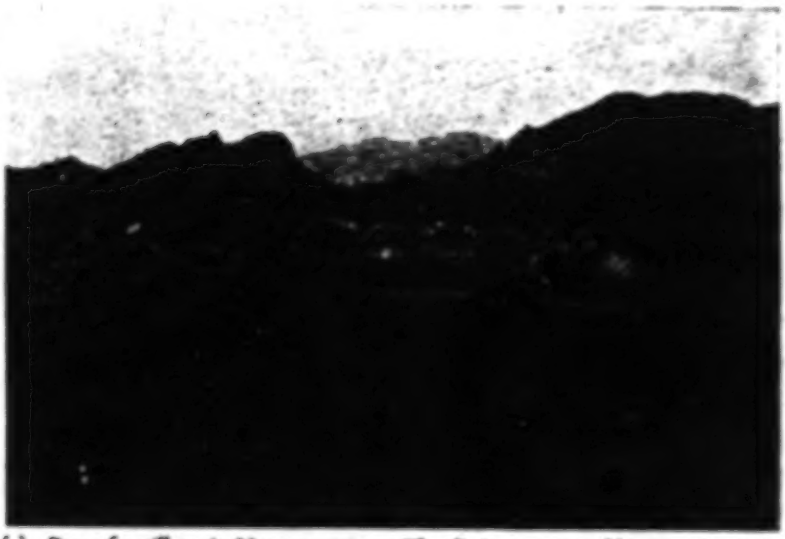

(a) Part of a village in Nanwera area. The distinct group of huts on the right is not related to those in the left-hand corner, but is only one section of the village.
(October 1946)

(b) A slightly different view of the same part of the village. The fence encloses the grainbin, kitchen and latrine.
(October 1946)

PLATE IX

[facing p. 206]

2: Mitchell E-5 (1946-1949) 1956 FT7 Yao FT7

621 close together so that the few men left in the village could protect
571 the village against man-eating lions. This is certainly an area
where man-eating lions are common and kill people every year.
• 341 It is true also that man-eating lions have ceased their depredations
in Kawinga and Nyambi areas. But I also found a similar type
of village in Malemia area.[1] Here the explanation was that the
villages had been made to live together by the Administration
under the 1912 Ordinance. But the Ordinance was applied to
the whole district, yet there are not many of these villages.

The relationships between the section leaders and the village headman are exactly the same as those between independent headmen farther south. The difference in the villages is the degree of physical concentration of the huts; which brings up for review the concept of 'the village'. I have defined the village as a discrete cluster of huts occupied by a group of kinsmen[2] and hinted that the huts were not always clearly separated from neighbouring huts. In fact the Yao word for village, *mzi*, may be applied to social groups of different orders. I have already mentioned that different sections of a village may be scattered in discrete groups. The term *kamzi* (diminutive) or even *mzi* may be applied to any of these clusters of huts in a situation where the larger kinship section is not involved. A man may tell his friend that he has bought some maize at Meni's village. He means that he bought the maize at the group of huts under Meni in Majaja village. In a court case, however, he would say that he had married a woman in Majaja village even though he were referring to the daughter of Meni.

621 The expanded village—i.e. the groups of kinsmen who recog-
571 nise the leadership of one man, but whose huts are relatively
distantly spaced in discrete clusters—may give a stamp to the
social organization in a small area of, say, a square mile or two.
The dominant matrilineage of the senior headman and his patri-
laterally-linked groups may all live in this area in physically
separate groups, but their kinship is still dominant and they are
for ritual purposes still 'of one fire'. In time any of these groups
may move off and be replaced by complete strangers. The
senior headman still retains his position of authority over the

[1] Ngalango village. It is described in 'An Outline of the Social Structure of Malemia Area', 33-6.

[2] Chap. I, p. 3, and Chap. V, p. 120 f.

621 When a villager died in pre-White days, the hut and personal effects were destroyed. Nowadays, with the improving type of [768] dwelling, which frequently includes well-timbered doors and glass-windows, huts are treated with medicine to cleanse them of the harmful effects of the death and they are used again. But [356] all houses must be repaired continually if they are to remain habitable. Eventually most houses fall beyond repair and new houses must be built. The women pull the poles out of the ground and use them for firewood and the site is planted with pumpkins or maize by the nearest relative.[1] A new hut site is then chosen according to the wishes of the owners. As a rule outsiders are neutral about this, and a village member selects a site in accordance with his or her social position in the village. The women still stay near their mother, but they may build on the outside fringe of a group of huts. When the mother's house collapses she may in turn build her hut on the outside fringe of the group near her daughter's hut. In this way the spatial distribution of the huts gradually comes to reflect the segmentation of the lineage.

621 As the woman's daughter's children grow up and marry, the 591 woman's son persuades his wife's relatives to allow him to take his wife to live in his home village. If he is a polygynist he usually takes the senior wife, but he may take the other or others as well. His own daughters now marry uxorilocally in the village if their mother is still alive. If the parents live long enough their daughter's daughters in turn marry and build their huts there. A crisis comes when either the man or his wife dies. The children have to decide whether to stay where they are or to move back to their own matrilineal village. If they do stay at their father's village they form the nucleus of a patrilaterally-linked group. As they grow older the senior male of their matrilineage may come to live with them. Through the years while this internal differentiation is developing within the village, the huts are decaying and being rebuilt. While new hut sites are being selected the physical form of the village is reflecting the continuing social differentiation.

621 At the same time gardens are being planted and crops reaped 361 each year. The soil in the first garden sites has probably been depleted already and is either lying fallow or is under cassava. 166

[1] Usually the name-heir of a woman, i.e. her daughter's daughter.

2: Mitchell E-5 (1946-1949) 1956 FT7 Yao FT7

As garden land becomes scarcer, members of the village have probably approached patrilateral or affinal kinsmen in other villages for personal grants of land. The lands immediately surrounding the village have long since become depleted and crops will only thrive on lands some miles away; then the village moves its site. How long it will be before this becomes necessary, depends on the fertility of the soil. Most villages must move eventually. When they do they may move a few hundred yards only, or on the other hand, they may select a site thirty to forty miles away. Whether the site is far or near, the migration is not a mass movement of the village as I have so far assumed for the purposes of analysis. As a rule a few villagers, including the headman, move first. The headman may be there a year or more before the second lot of villagers move. They usually move in sorority-groups so that when they build at the new site they place their huts in sections. Thus, the internal social organization of the village is reflected in the same way as before. The whole move may take three or four years before it is completed.

This process of development of the village and its gradual and continual reformation is sometimes hastened by the conflicts that appear within it. I have from time to time mentioned various conflicts that have led to the split of a village and the subsequent migration of one of its sections. The new section sets up a small hamlet in a distant locality, especially if the reason for its secession was sorcery. Here the general process of evolution is started anew. Its parent village, however, is strengthened by the migration since the dissident elements have left it. It continues to carry on its existence and to throw off other villages from time to time.

The number of villages, in the area I studied, is increasing with the increase of population, but the average size of each village remains constant and appears to have done so for many years.[1] But at the same time some villages as entities are disappearing while new ones are being formed. A few new villages become resorbed by their parent villages when for some reason they cannot continue their separate existence. Other villages fragment and do not split. The individual village members leave the village and go their separate ways. Very frequently when

[1] See the argument in Chap. II, p. 40.

2: Mitchell E-5 (1946-1949) 1956 FT7 Yao FT7

APPENDIX B

GENEALOGY, HUT COUNT AND VILLAGE PLAN: ALI KASUNKA VILLAGE

Hut numbers in brackets after the names in the genealogy.
Other symbols: d – dead; mw – married out; lm – labour migrant; u – below age of puberty; k – kitchen.

361
613
621

Hut Ownership

Hut No.	Owner	Gen. Ref.
1	Dr. Kasunka	C5
2	Dr. Nkumula	D10
3	Dr. Nkawa	D1
4	Alinje	D13
5	Dr. Sale	D15
6	Mwanaze	D10
7	Ali Kasunka	C6
8	Mbulayao	C1
9	Azawila	C7

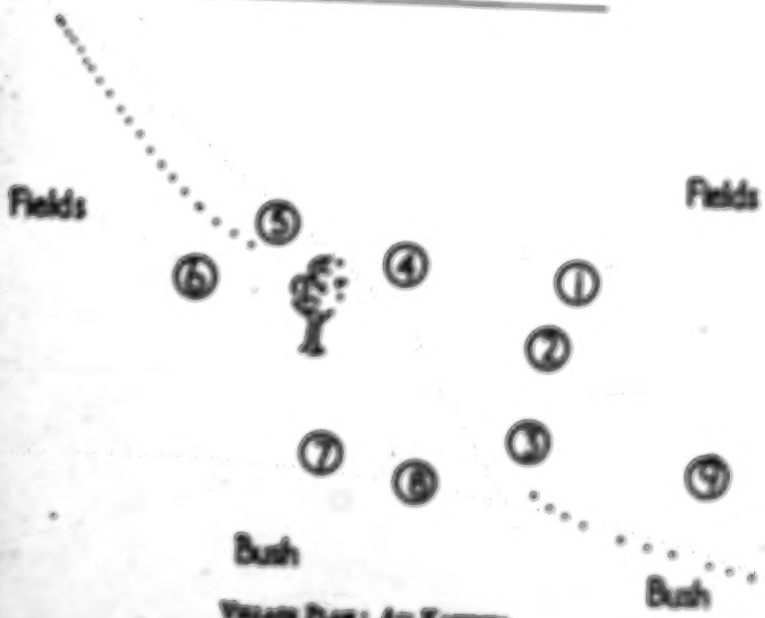

Village Plan: Ali Kasunka
(Not to Scale)

2: Mitchell E-5 (1946-1949) 1956 FT7 Tao FT7

APPENDIX C

SKELETON GENEALOGY, HUT COUNT AND VILLAGE PLAN: MIDE SECTION OF MAJAJA VILLAGE

Only hut owners are shown in the genealogy.

361
617
621

Hut Count

Hut No.	Owner	Gen. Ref.	Hut No.	Owner	Gen. Ref.
1	Mesi	B4	19	Dr. Taiwo	D6
2	Empty		20	Kitchen to hut 18	
3	Ashinyoje	C8	21	Dr. Wori	D7
4	Girls' dormitory		22	Ngwabdu	
5	Sayisi	D11	23	Dr. Toyali	D5
6	Dimmi		24	Dr. Saili	D9
7	Dr. Nyili	D1	25	Dr. Saili	D10
8	Dr. Mbangwi	D7	26	Dr. Gwamumbe	C4
9	Dr. Dawa	B2	27	Ali Asini	D8
10	Dr. Wumbe	D6	28	Boys' dormitory	
11	Ashwanjile	C1	29	Dr. Cimengo	C7
12	Baiya	B1	30	Dr. Jawa	
13	Eisani	C6	31	Amanyoge	B6
14	Dr. Mbaje	C7	32	Palanjoje	D8
15	Amina	B3	33	Dr. Majaja	B3
16	Dr. Cibwana	C7	34	Ambalaje	C10
17	Mongwe		35	Ebi	C11
18	Cibwi	C3	36	Lani	C10

The following huts are not included in the genealogy:

Hut 2—Empty.
Hut 4—Girls' dormitory.
Hut 6—Dimmi.
Hut 17—Mongwe.
Hut 20—Kitchen to Hut 18.
Hut 22—Ngwabdu, a non-relative.
Hut 27—Boys' dormitory.
Hut 30—Dr. Jawa, a relative of Ngwabdu.

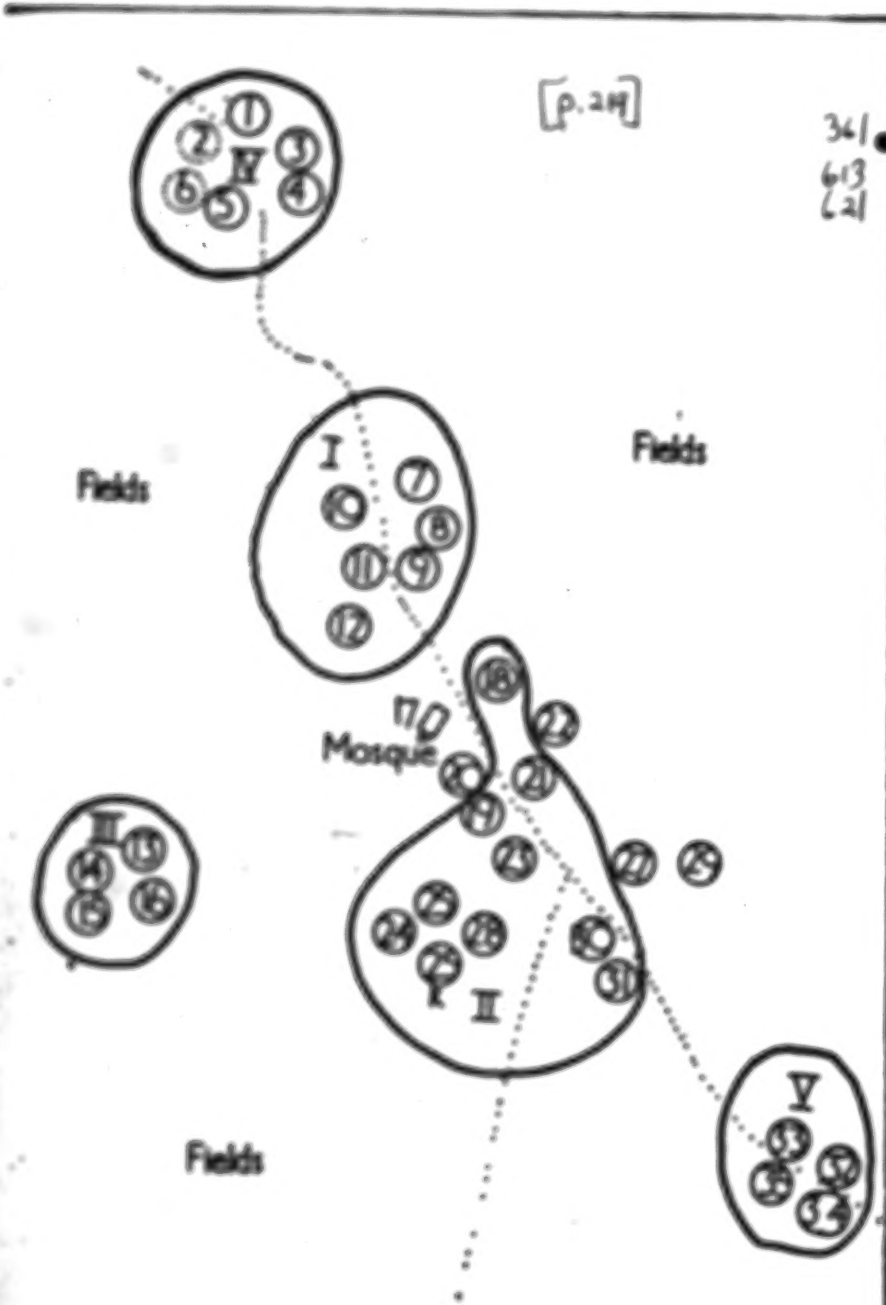

Village Plan: Mapuja
(Not to Scale)

2: Mitchell E-5 (1946-1949) 1956 FT7 Yao FT7

APPENDIX D

GENEALOGY AND HUT COUNT: CIKOJA VILLAGE

Hut Count

361
613
621

Hut No.	Wife's name	Gen. Ref.	Name of husband	Gen. Ref.
1	Amanda	D14	Mbwana	C11
2	Ayesi	B8	Kanali	D11
3	(Boys' dormitory)			
4	Bt. Tepesi	F37	Mapila	E32
5	Bt. Beula	E19	(outsider)	
6	Aniya	D15	(outsider)	
7	Bt. Ajamuno	E14	(outsider)	
8	Alisi	D16	Ali Mkwanda	C13
9	Lonjela	E13	(outsider)	
10	Ajamo	E25	Mona	D7
11	Bt. Mwamadi	G10	Nkatawila	D10
12	Bt. Bwana ka	F16	(outsider)	
13	Bt. Amina	E4	(outsider)	
14	Anabiya	E9	(outsider)	
15	Abena	E30	Rajabu	F20
16	Bt. Selemani	D19	(outsider)	
17	Nerweza	B60	Salimu ii	D3
18	Bt. Kacenga	D40	(outsider)	
19	(outsider)		Ali Tepesi	E40
20	Alima	D22	(outsider)	
21	Abiya	D23	(divorced)	
22	Kalengule	E38	(outsider)	
23	Akumbiripe	E31	(outsider)	
24	Bt. Ciwina	E33	(outsider)	
25	Bt. Mwenye	C14	(outsider)	
26	Bt. Mwanjale	E35	(outsider)	
27	Alisi	E37	(outsider)	
28	Bt. Cinings	E39	(outsider)	
29	Anideya	E36	(outsider)	
30	Tewemeje	E34	(outsider)	
31	Bt. Ulunga	D34	(outsider)	
32	Bt. Lilomba	E33	Jumma	F7
33	Bt. Cikwenga	F64	(outsider)	
34	(outsider)		Cilomba	F1
35	Bt. Madi	F10	(outsider)	
36	Bt. Aliya	F11	(outsider)	

2: Mitchell E-5 (1946-1949) 1956 FT7 Yao FT7

Hut Cover—*continued*

Hut No.	Wife's name	Gen. Ref.	Name of husband	Gen. Ref.
37	Dr. Hulika	Ey	(*consider*)	
38	Dr. Kimu	Gy	(*consider*)	
39	*Ayawila*	Eyo	(*consider*)	
40	Dr. Magoowa	Dyo	(*consider*)	
41	(*consider*)		Kasai	Fy
42	Mugo	Fyd	(*consider*)	
43	Dr. Mbowana	Fy	(*consider*)	
44	*Ayayeje*	Fyp	(*consider*)	
45	Kasagwi	Fyo	(*consider*)	
46	Adimoma	Ed	(*consider*)	
47	(*consider*)		Cikeja VI	By

34/
613
624

Note: The genealogies for Appendices B, C and D have been inserted as folding plates at the end of the book.

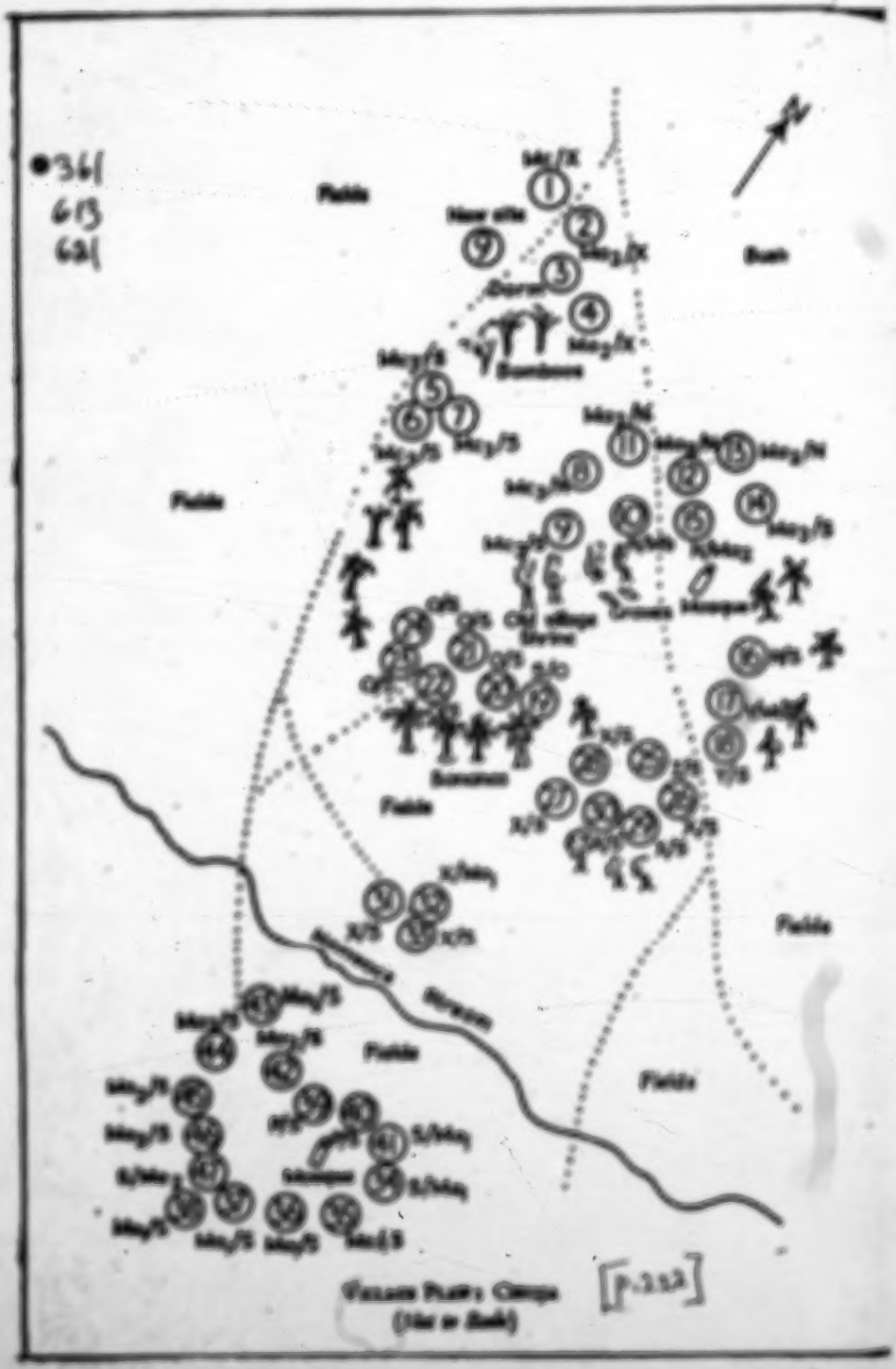
Fields
Fields
Fields
Fields
Fields
Fields
Bamboo
Bamboo
Bamboo

2: Mitchell E-5 (1946-1949) 1956 FT7 Yao FT7

KEY TO CIKOJA VILLAGE PLAN

Ma — Senior segment of dominant matrilineage, i.e. descendants of Nzilaga (C1).

Mb — Second segment of dominant matrilineage, i.e. descendants of Bo. Mkwinda (C6).

Mc — Third segment of dominant matrilineage, i.e. descendants of Lonjola (C8).

Ma_1 — Descendants of Andéya (D1).

Ma_2 — Descendants of Amulanu (D2).

Ma_3 — Descendants of Amawula (D14).

Ma_4 — Descendants of Anjya (D15).

Ma_5 — Descendants of Alusi (D16).

N, O, P, X, Y, Z — Patrilineally-linked lineages.

S — Outsiders.

Ma_1/B — A female descendant of Amawula married to a man from B patrilineally-linked lineage.

361
613
621

[p.223]

2: Mitchell E-5 (1946-1949) 1956 FT7 Yao FT7

Generation—A B C

● 361
613
614

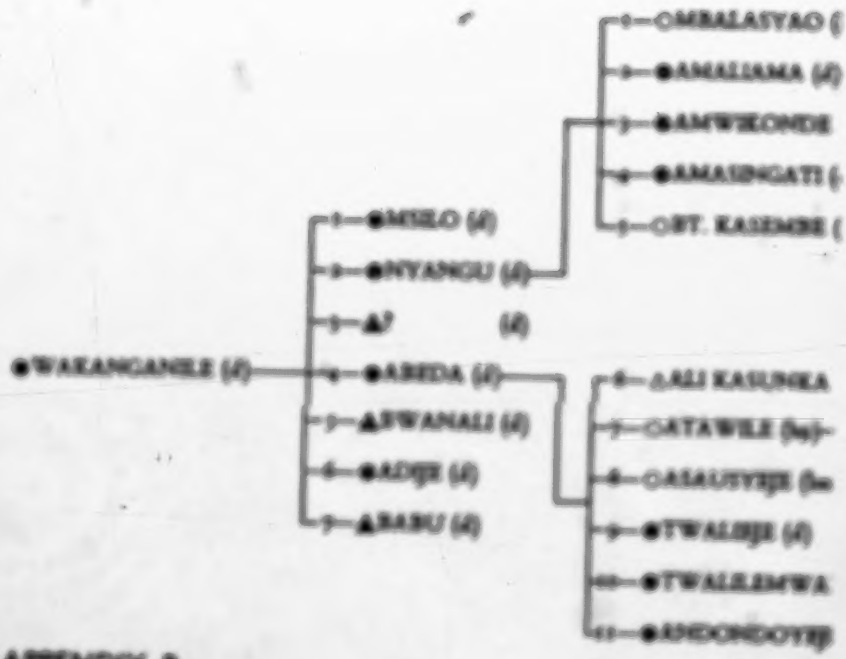

APPENDIX B

[End chart 1A]

2: Mitchell E-5 (1946-1949) 1956 FT7 Yao FT7

● 361
613
614

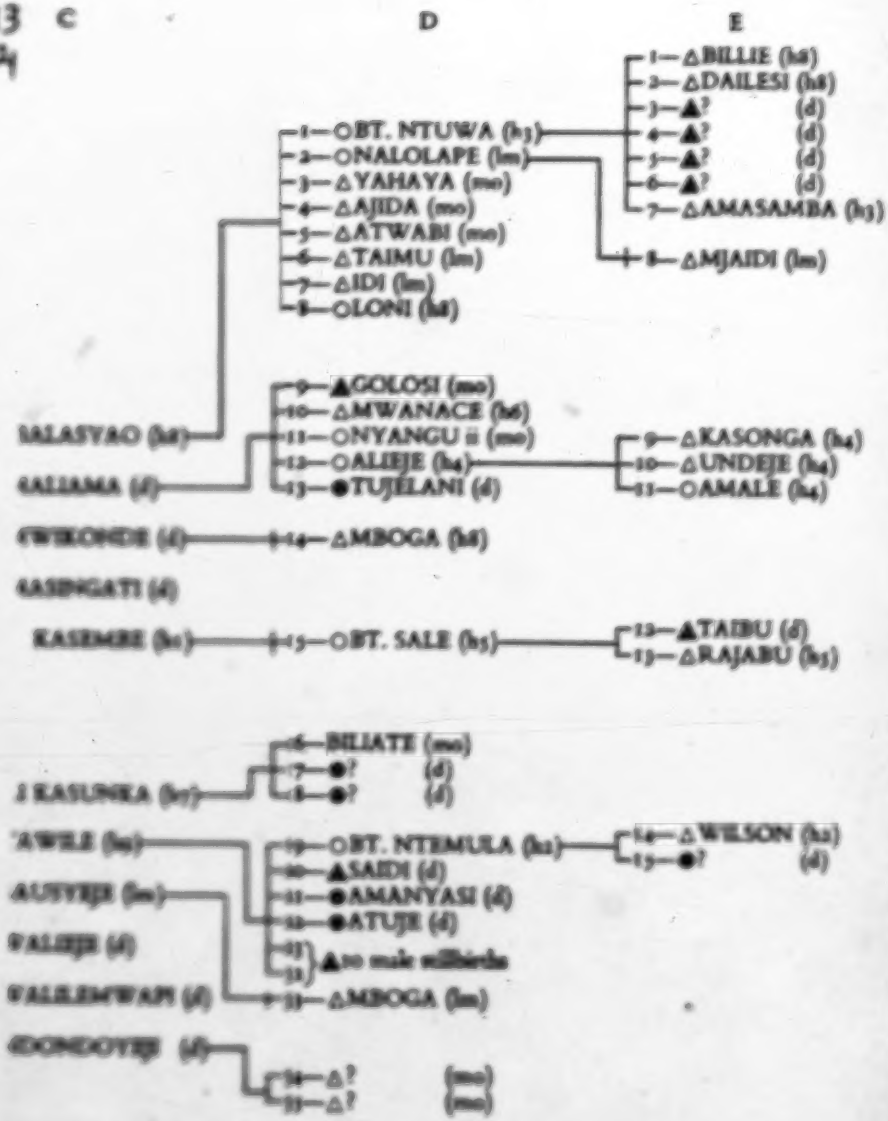

[End Chart 1b]

2: Mitchell E-5 (1946-1949) 1956 FT7 Yao FT7

●361
613
621

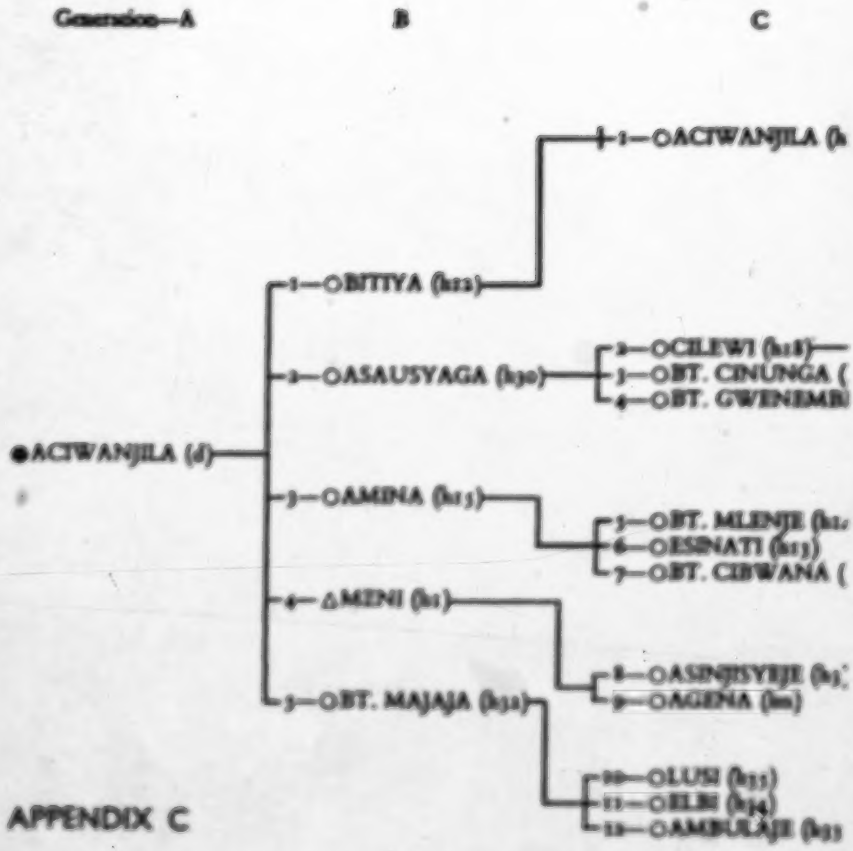

APPENDIX C

[End chart 2a]

2: Mitchell E-5 (1946-1949) 1956 FT7 Yao FT7

● 361
613
621

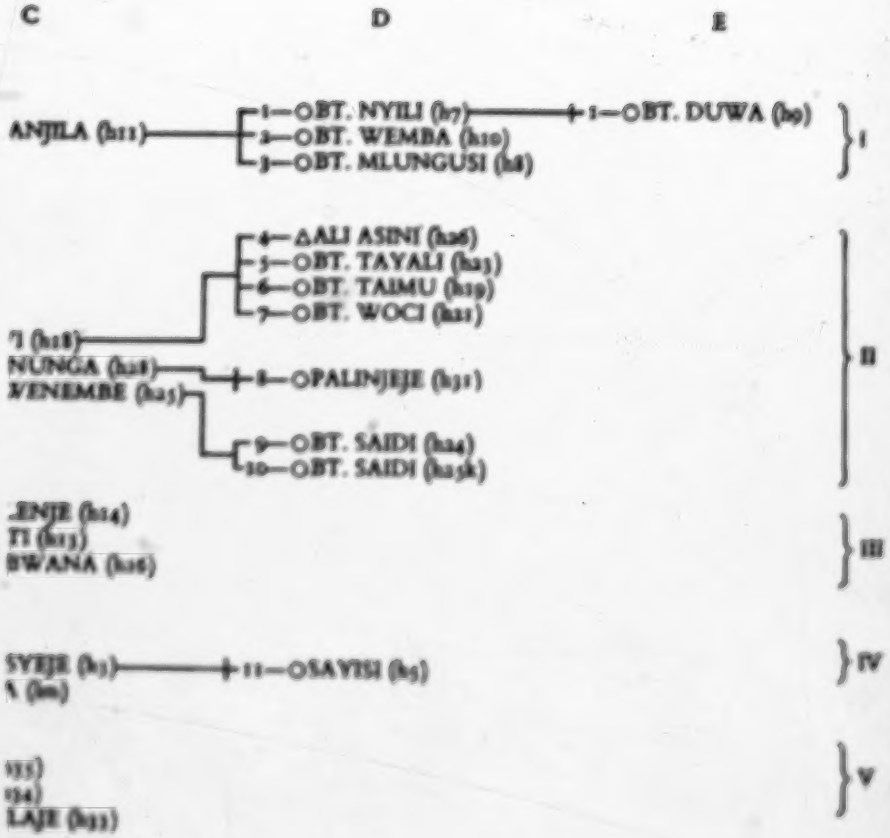

[End chart 2b]

2: Mitchell E-5 (1946-1949) 1956 FT7 Yao FT7

Gamelan A B

361
613
614 APPENDIX D

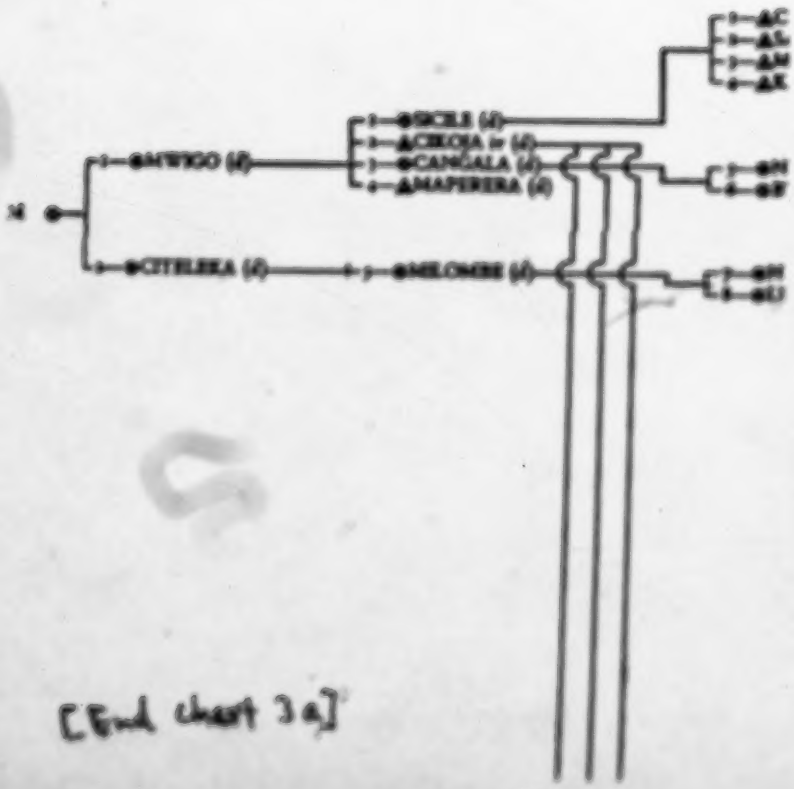

[End chart 3a]

2: Mitchell E-5 (1946-1949) 1956 FT7 Yao FT7

C D

●361
613
621

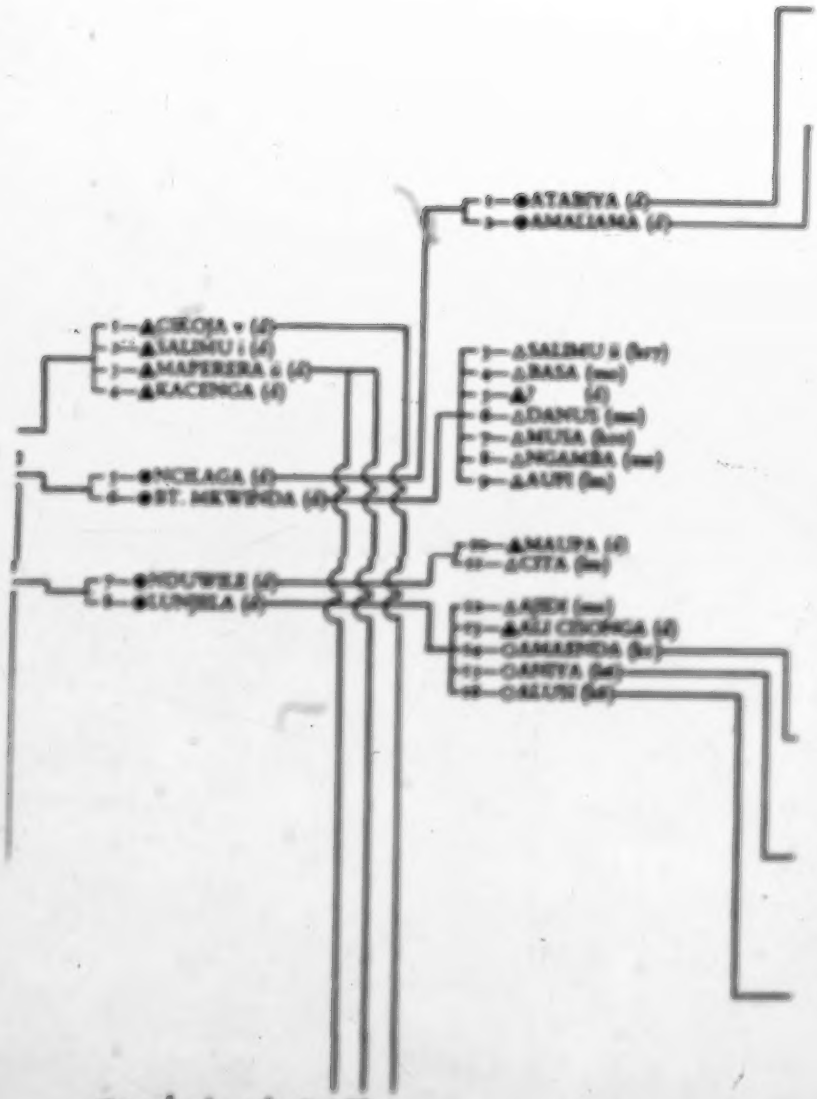

[End chart, 3 b]

2: Mitchell E-5 (1946-1949) 1956 FT7 Yao FT7

E F

●361
613
621

1—△CILIMBA (h34)
2—○BT. MBWANA (h43)
3—△KAUSI (h41)
4—△GWILI (mo)

5—●? (d)
6—△SEMU (mo)
7—△JAUMA (h32)
8—▲ASSAM (d)
9—△AJISA (mo)
10—○BT. MADI (h35)
11—○BT. ALIYA (h36)

1—●WEGAME (d)
2—●ASUNA (d)
3—○BT. NTALIKA (h37)
4—○BT. AMISA (h13)
5—●? (d)
6—○ASIMAMA (h38)
7—△CIKOJA vi (h47)
8—○AYESI (h1)
9—○ASUBIYA (h14)

12—△SIME (u, h3)
13—△IDI (u, h3)
14—●? (d)
15—▲? (d)

16—○BT. BWANA ISA (h1
17—▲DELEMANI (d)
18—△AMIDU (mo)
19—△KANYENGA (mo)
20—△RAJABU (h15)
21—△KAPINGU (KAR)
22—△AKIBA (u, h15)
23—▲AJISA (d)
24—△FRED (mo)
25—△GERALD (u, h12k)
26—▲AJISA (d)

27—○BT. MAKWESA (lm)
28—○MEGE (h42)
29—○AYUYEJE (h44)
30—○KASI NGATI (h45)
31—○NKATENDESYAGA
32—△BILI (u, h47)
33—●? (d)
34—●? (d)
35—●? (d)

36—△KAIPA (mo)
37—○BT. TEPANI (h4)
38—△AIDINI (u, h2k)
39—△ALANGA (u, h2k)
40—▲? (d)
41—△KAUSI (u, h2)
42—△JAMES (u, h2)

43—▲? (d)
44—▲? (d)
45—△MALOGWAGA (u, h
46—▲SELEMU (d)
47—●ALUWINDA (d)
48—○? (h14)

49—○NDEWASYAGA (u, l
50—●? (d)
51—●? (d)
52—●? (d)

53—○? (u, l

[Bed chart 7c]

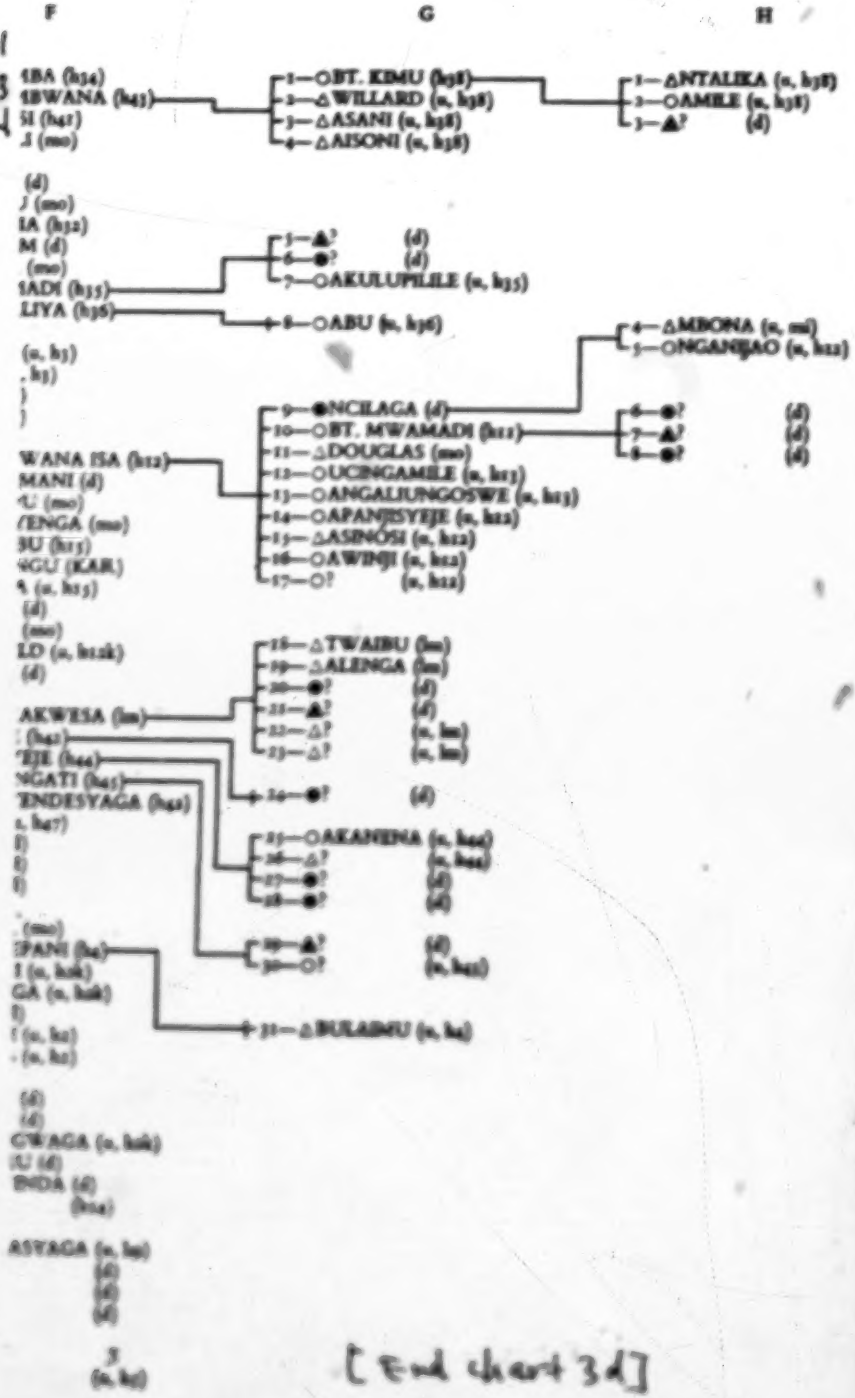
F
G
H
361
613
621
BT. KIMU (h38)
WILLARD (n, h38)
ASANI (n, h38)
AISONI (n, h38)
NYALIKA (n, h38)
AMILE (n, h38)
AKULUPILILE (n, h35)
ABU (n, h36)
MBONA (n, m)
NGANJIAO (n, h22)
NCILAGA (d)
BT. MWAMADI (h22)
DOUGLAS (mo)
UCINGAMILE (n, h23)
ANGALIUNGOSWE (n, h23)
APANJISYEJE (n, h22)
ASINÓSI (n, h22)
AWINJI (n, h22)
TWAIBU (hm)
ALENGA (hm)
AKANJENA (n, h44)
BULABMU (n, h4)

[End chart 3d]

2: Mitchell E-5 (1946-1949) 1956 FT7 Yao FT7

●361
613
621

Dominant marriage in CAPITALS
Hut numbers in brackets after names
Other symbols :—
d = dead
m/c = married out
im = labour migrant
u = below age of puberty
m/i = migrated
k = kitchen
KAR = King's African Rifles

[End chart 3 a]

2: Mitchell E-5 (1946-1949) 1956 FT7 Yao FT7

● 361
613
621

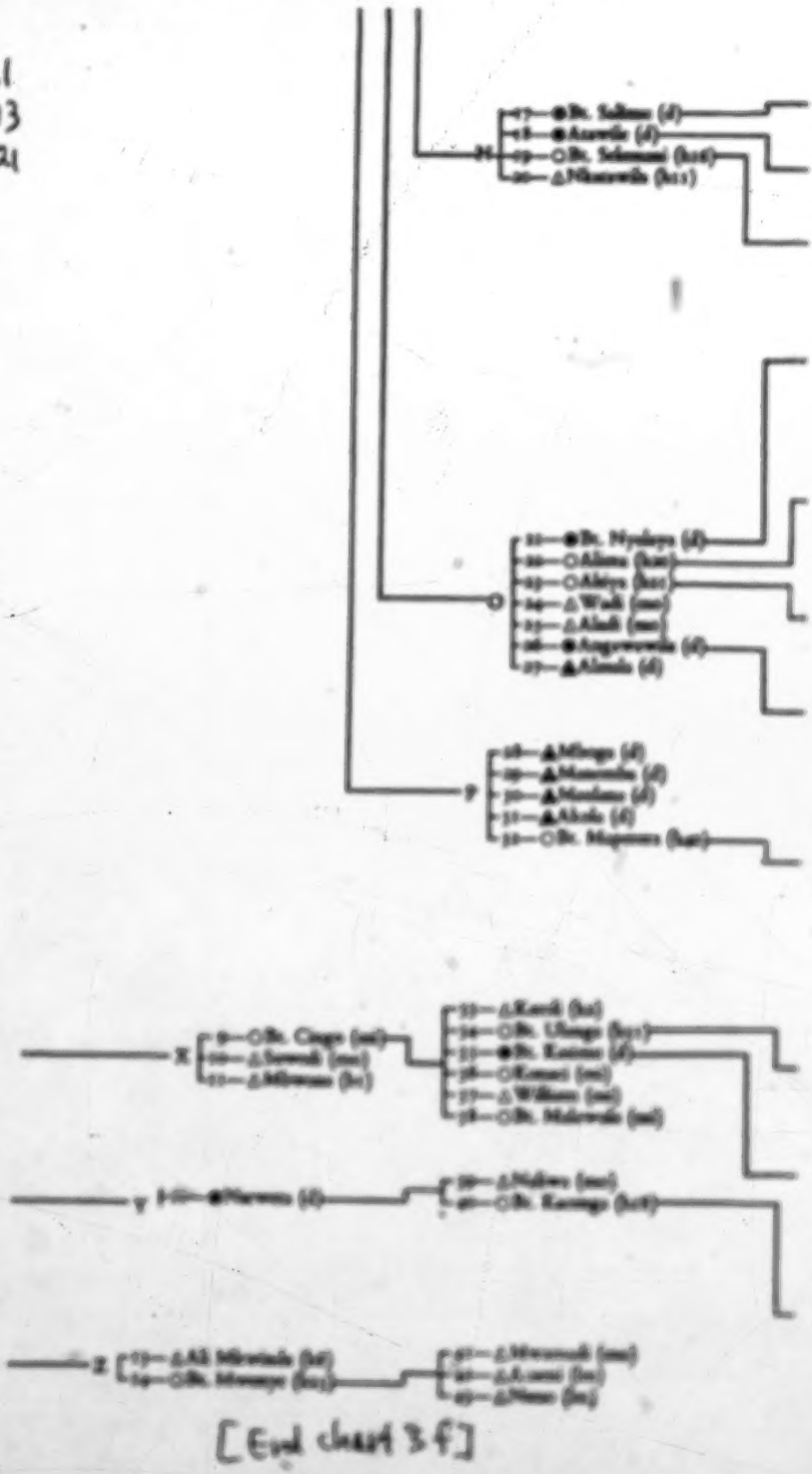

[End chart 3f]

2: Mitchell E-5 (1946-1959) 1956 FT7 Yao FT7

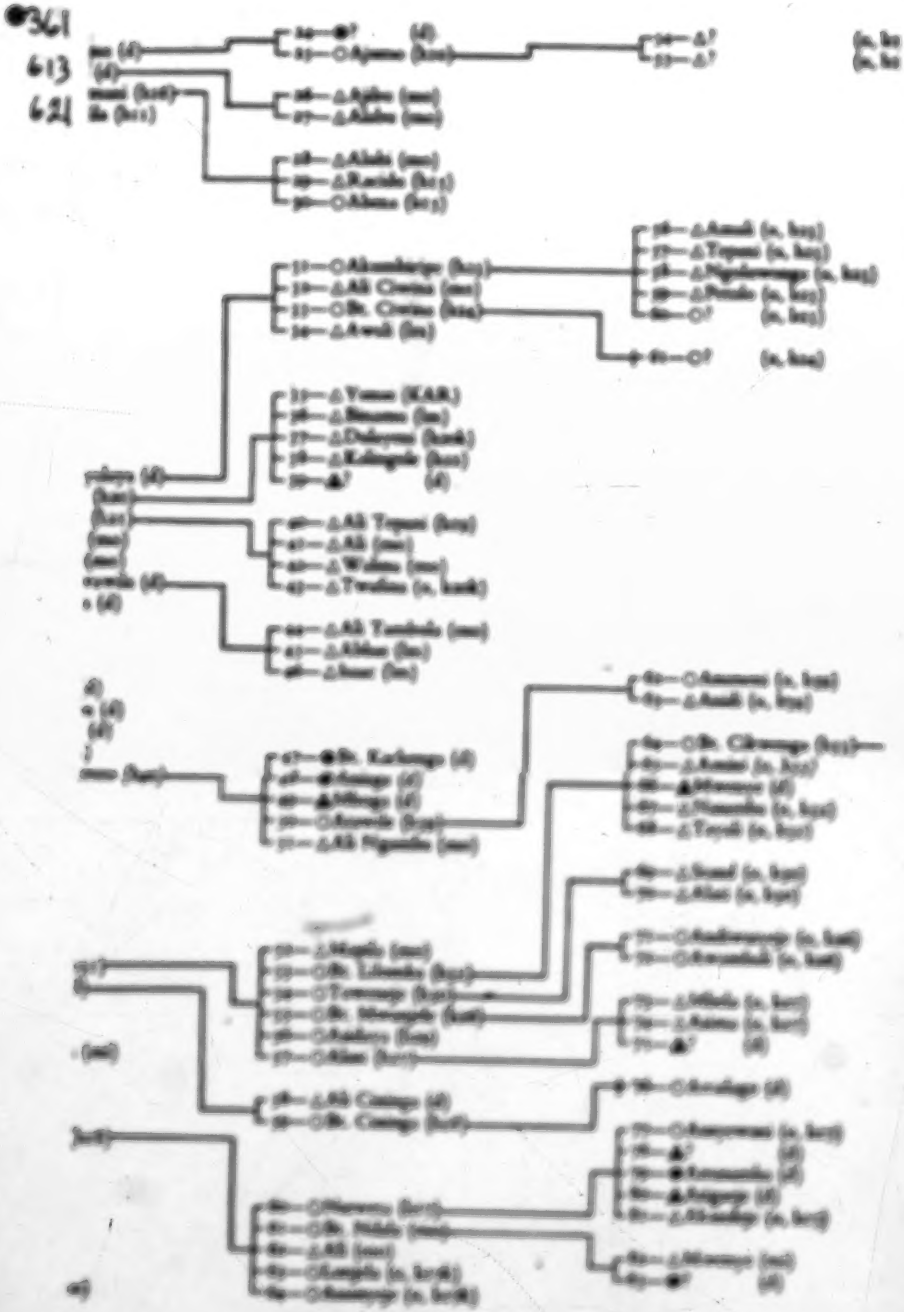

[End chart 3g]

[illegible]
[illegible]

● 361
613
621

[illegible]
[illegible]
[illegible]
[illegible]
[illegible]

[illegible]

[illegible]
[illegible]
[illegible]
[illegible]

3:Stanner D-5 (on. 1912) 1922 FT7 Tao FT7

There has never been any shortage of land and therefore the planting out of gardens was a matter which caused little trouble. A man wishing to make a new garden the next season simply marked the site in the bush by cutting some trees or hoeing around some patches of grass and tying the grass ends into a knot. If anyone else came along and had this plot, the man who had marked it out still claimed it and need not pay for the hoeing down. Whenever a man was doubtful about a piece of land, he would ask advice of the headman of the village. 423

When an abandoned garden had become overgrown, anyone wishing to take it up applied to the headman who sent him to ask the original owners whether they wished to take it up again. The newcomer could take possession only with their permission. 3/1

Often if a village was moved, during the first season the people simply put up shelters in their gardens. Later, the site of the village was chosen and around it a medicine man sprinkled medicine to insure happiness and prosperity. The tree from which this medicine was made became sacred to the village and might not be used for firewood, or was subject to any other taboo the medicine man might care to make. He might also say, "In this village there shall be no pounding of grain at night," etc. 423 [189] [178]

If a village were to be built near a spot previously inhabited, medicine and offerings were made to the departed spirits of the former occupants to put them at rest and "open" the place to the newcomers. The bone-pot from the grave of some former chief or headman, who was supposed to have directed the destinies of the old village, was brought to the new location and here placed in it to insure his continued guidance. [169]

In the case of a village into which a number of men had married, the spouses of the wives went to the spouses of the husbands and asked permission to move the village. Later, beer was brewed in the new village and the spouses invited to come and drink and "put feet in the new village." [203]

Relationship. Family relationship among native presents certain difficulties to the European accustomed to equivalent relationship of males and females on both sides of the family. In the diagram below (Fig. 1) the relationship of the two children (C 3) will be traced. The mother and father (B 10 and 9) are the subjects and some but are addressed as sister and aunt. The maternal uncles elder and younger than the mother (B 11 and 12) are called chombwe and their wives (B 13 and 14) ahongwe. The maternal aunts are addressed as sister, mother, anyone older than the mother being distinguished as ahwe mahokongwe, "the bigger" (B 15), a younger aunt as sister nanamali, "the lesser" (B 17); their respective husbands are addressed atati, atati mahokongwe (B 16), and atati nanamali (B 18). On the father's side the uncles are called atati mahokongwe (B 1) and atati nanamali (B 2), respectively, for those older and younger than the father, and their wives ahwe mahokongwe (B 3) and ahwe nanamali (B 4). The paternal aunts are called atati mahongwe (female mother) (B 5 and 7), their husbands (B 6 and 8) atati. 595* 601

* See diagram, p. 202.

778
05
532

[341]

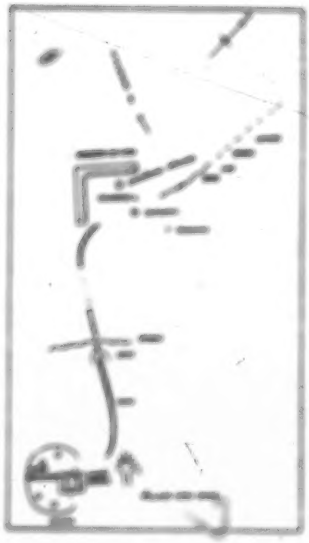

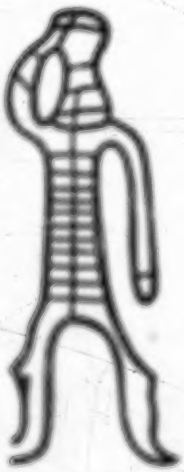

[illegible]

[End Plate 10]
[Explanation of plates, cat. No., p. 365]

9: Mitchell E-5 (1946-1948) 1949 F77 Yao F77

ship. The difficulties of his position are brought home to the employee village headman in speeches made by old and experienced men. On one such occasion I heard a man say, 'Some men who marry into a village are bad and can split a village like this one by telling lies to the headman, saying that his sisters are talking behind his back and are insulting him. When a headman hears all this he might break his village by ill-treating his relatives, thus causing himself to be left all alone.' In this way the headman's responsibility for maintaining harmonious relations between the members of the village and himself is emphasized. His failure to do so results in what they call a hook in the village—the departure of some of the members to live elsewhere—which is a severe blow to the status of the headman. In fact, he is dependent on his dependants for status, and the Yao are quick to point this out to employee headmen, saying, 'A tree cannot grow without branches.'

We can better understand the situation if we consider the social structure of the Yao village a little more closely. The Yao are a matrilineal people and are dominantly matrilocal. They live in small groups of huts scattered fairly evenly over the country and from a few hundred yards to possibly a mile or so apart. Such clusters may contain as few as five or as many as sixty or more huts, occupied by between 20 and 200 people.

These people are almost always kinsfolk, and in the smaller villages they are usually all either matrilineal descendants of a common ancestress or their spouses. In the larger groups there is a more complex situation which I shall analyse below. In the simpler groups there may be no male matrilineal descendants in the village and the leadership of the group is taken over by a senior female descendant of the founder of the village. Usually, however, if the group is large, one of the male matrilineal descendants lives permanently in the village and assumes leadership.

The relationship between a male matrilineal descendant and the female matrilineal descendants who are in his charge is signified by the word '*ukwanda*'. The word particularly refers to the relationship between a man and his sisters and I have therefore translated it as 'security-group'. It includes a man's full sisters, matrilineal female collaterals (whom he calls sisters), their female children, and the female children of these female children, and so on. It is usually used in the sense of 'somebody's security-group'. A man belonging to the descent group of the security-group may refer to these women as 'our security-group'. The man who is in charge of the security-group is referred to as the *ayaw ukwanda*. This could be translated as 'owner of the security-group' but because of the property associations with the word 'owner' in our language, I have instead translated this as 'warden of the security-group' which expresses more accurately the relationship between a man and his female relatives. Even in those groups where there is a female in charge of the village and no male matrilineal descendant is resident in the group, there is usually some one man, possibly married in some other village, who is warden of the security-group. The warden of a security-group has certain peculiar duties to perform on behalf of his charges. First, he is concerned with the good relations between members of the security-group and with other such groups. He has to settle most of the domestic quarrels that take place between members of the security-groups. Second, and this is considered to be a most important function, he is the person who is the

improved on people's memories and remembered by most of the people. Thus it was desirable to find a useful reference date between 1910 and 1940. It might be thought that the death of King George V would be memorable. However, though all who were old enough at the time could remember the witchdoctors, only a few could remember the death of King George.

This dubious chronology was filled in by events of more local significance. For example, Kwesiga's hatch house was built in 1919, the present Nyendi succeeded in 1915, &c. In addition, in particular hamlets there were men who had been in the Army, or had been to work in South Africa or Southern Rhodesia. Usually they could recall the date of going and sometimes of return, though they may have lost count of the intervening years. Such dates were often useful points. A small minority had actually recorded the dates of birth and death of children.

In addition to this, it was possible to fix the ages of the young children by reference to harvests, since the Tao reckon two years in succession, 'last year' meaning before the last harvest and 'the year before last' meaning the period before the harvest before last. Before the year before last, all time is merely *kale kale*, the only indication of the period being the pitch of the voice in which it is said or the presence or absence of an exclamatory 'E!' before speaking.

Particular care was taken to secure the ages of women and the dates at which they had borne children. There was, as mentioned above, some reticence in mentioning the names of dead children, but this was usually met successfully by questioning the women's male relatives who were generally more communicative on these points. In spite of the care taken to obtain this information, it was impossible to fix the ages of six women in the sample, and they have been excluded from the major part of the analysis. In addition, there were thirty-nine men who were not available for questioning. These were all adults, the husbands of women in the hamlets. The Tao are matrilineal and matrilocal, and men tend to spend much of their time away from the hamlet of their relatives-in-law. Since they are in many ways strangers in the hamlets no information could be obtained about them.

2. The Common Background to Fertility

All the hamlets visited were occupied by members of the Tao tribe. The Tao are an Islamized people who achieved the questionable distinction of being slaving slave raiders at the end of the nineteenth century. They are a matrilineal and patrilocally matrilocal people living in hamlets of from about 5 to one hundred or more.

Table 1. *Age of Women at First Marriage*

Age of women at first marriage													
[illegible]	[illegible]	[illegible]	[illegible]	[illegible]	[illegible]	[illegible]	[illegible]	[illegible]	[illegible]	[illegible]	[illegible]	[illegible]	[illegible]
Under 40	1	0	1	18	0	0	1	0	...	...	...	22	18.1
40-49	0	0	1	11	0	0	1	0	...	0	0	12	18.1
Over 49	...	0	1	1	0	0	1	0	...	0	...	13	18.1
Totals	1	14	13	30	11	11	0	0	...	0	0	100	100

[P. 141 8]

(6) The people with whom this paper is concerned[1] occupy that part of Nyasaland between the Chikala Range in the South; Mount Mangoche in the North; the Shire River in the West; and the Portuguese East African border to the East. This area is represented on the accompanying diagrammatic map. A more detailed description of the general social organisation of the Yao in this area, and of their history and general cultural background is to be published shortly.[2] At
(7) this point it is sufficient to say that the Yao are semi-subsistence cultivators living in village settlements ranging from a few huts to sixty or more, with an average of about twelve. This represents say a population average of about 40 per village but ranging from 15 to over 200.
(8) These village settlements are inhabited by groups
(9) of kinsmen. In general there is a matrilineal core
(10) of kinsmen of whom the village headman, who has the same status as the village, is one. In some more complex villages there are subsidiary matrilineages related to the matrilineal core agnatically

776 THE [illegible] OF THE [illegible] "[illegible]", [illegible]

(776) is swept up, the ground round the house is hoed clean, and the hearth scrubbed.
(776) Concerned here is hoeed by the head-wife of the chief, and after this has been done the ashes of the fire used in the burning are carefully collected and taken to a sacrificial ("[illegible]," or "dragging of poles") where they are deposited.
(776) The chief, as representative of his people, bathes in special medicated water, a
(776) decoction made from the bark of [illegible] and [illegible], and the rest of [illegible]
(776) This completes the ordinary annual ceremony, at which new fire is not made.

(776) On certain special occasions a more elaborate ritual is carried out; such occasions are the death of a chief, a threatened epidemic of infectious disease, a murder (especially by shooting) and the frequent occurrence of quarrels in the village.

In such circumstances, in addition to the ordinary purifie ceremony described above, the purifie sticks of the whole village are removed and all fires extinguished. The discarded sticks and all ashes of the old fires are carried to the meeting of paths, where the former are stuck upright in the ground and the ashes piled together; this is done in procession, all the people taking part. On their return to the village (776) new fire is made by friction by either the chief or his younger brother—usually the latter; fire procured in any other way would nullify the proceedings. Finally (776) all the people bathe in the medicated water and only by the chief at the ordinary ceremony.

§57 776 In addition to this special form of the purifie ceremony, another rite is sometimes performed after the occurrence of a murder or as prophylactic against the spread of epidemic disease. The doctor first makes a kind of trough ([illegible]) from the bark of [illegible] or [illegible], and procures a shekkide (or [illegible]) basket—used as a container to sub-marking. Having collected his medicines he proceeds to the bank of the stream near the usual bathing-place of the village and digs a shallow hole, in which he places the basket; in this he puts the leaves of a certain thorny shrub and covers the whole with the trough, which is bedded up with earth so as to be perfectly firm. He then puts his "medicines" into the trough; these are, first, the head of an iron hammer and a piece of [illegible], both from a smelting furnace. On top of these he puts pieces of the root of a certain tree which has many and particularly sharp thorns, and bits of bark from two trees peculiar for having very straight stems. Having distributed these evenly along the floor of the trough, he fills it with water and then proceeds to construct an arch over the end of the trough farthest from the stream. Two long poles, cut from a kind of tree particularly rich in sap, are planted in the ground, one on each side of the trough and close to it; these are bent over towards each other, and fastened together by means of a strip of their own bark. A bamboo is now planted alongside each, and similarly tied to its fellow. During all these preparations and throughout the ceremony it is essential that the doctor has no knots in any part of his clothing.

The preparations are now complete, and when all fires in the village have been extinguished the people go in procession to the spot where the doctor awaits them. All must be purify clad and must have no metal about them.

(776) The chief opens the ceremony. He steps into the trough and taking some of the medicated water therefrom in his hands he cleans his mouth with it. He then (776) offers a prayer to the spirits of his ancestors, first stating the occasion and recalling the measures which are to be taken to deal with it (new fire, sweeping, discard of purifie sticks and shooting). The prayer over, he splashes the water in the trough over his body and passes through the arch, first throwing some gifts (beads or, in more modern times, money) into the trough. These gifts, generally intended as an offering to the spirits, are the perquisite of the doctor, and everybody is supposed to contribute in turn.

2: Mitchell E-5 (1946-1949) 1956 FT7 Yao FT7

again. In the past, disputes hinging on murder had this aspect, though they were usually settled by a feud. Nowadays, of course, all murder cases are filed "alongside one of the hands of the chief, but the special fine for bloodshed is still levied in cases of assault. When a man is convicted of assault in the chief's court he will have to pay three separate amounts: one to the victim as compensation, one as a fine to the Native Treasury, and one to the chief "so that he may see again".

A similar provision applies to cases of arson. When a case is brought to the chief because a man has burnt another's hut, the chief will say that the guilty man has "brought a torch into his country". The man convicted of arson will have to pay a special fine to the chief in the same way as the man who caused bloodshed. The association of the unity of the chiefdom with fire probably has some place in the attitude of the chief here. People who have come to a chiefdom as strangers are said to have come to "seek the chief's fire",[1] and all the fires in the chiefdom are supposed to have been kindled from one flame. This expresses the unity of the chiefdom: the burning of the hut, therefore, symbolizes the introduction of discordant elements, as well as being a serious crime in itself.

The Court's Judicial Functions

It is clear from MacDonald's writings that in pre-White days the chief settled most of the serious disputes in his chiefdom. Nowadays, this function of the chief has been given legal sanction under the Native Courts' Ordinance of 1933. "A" grade courts have the power of imposing fines not exceeding £5, or 6 months' imprisonment and 12 strokes whipping; and "B" grade courts may impose fines not exceeding £1 and imprisonment including hard labour not exceeding one month, but not corporal punishment. The Native Authorities, Jalasi, Nyundó, Kawinga and Liwonde, all have "A" courts; the Subordinate Native Authorities, Chikwere, Ngokwe, Chiwalo, Chambo, Mpona, Mlondo, Sowa, have "B" courts. Only a certain proportion of disputes is brought for trial in these Native Authority courts. This is because, firstly, the Administration does not admit the legality of some disputes. Most of these centre on charges of witchcraft,

[1] A similar view of fire in the village commons is discussed in Chap. V, p. 110.

Further enquiries may reveal that this is only a section of a larger village, possibly a hundred or more yards away.

The boundaries of a village may not always be clear. Clusters of huts which are part of one village may be physically nearer another, but in the minds of the Yao, who see not only the huts but also the social relationships of the people occupying them, there is no confusion at all. As a general rule the villages are fairly compact and clearly demarcated from others, and even strangers have no difficulty in recognizing the autonomy of the group which is expressed in many different ways. MacDonald recorded that formerly a headman performed a certain amount of ritual which symbolized the unity of the village.[1] Much of this has fallen away, but the unity remains.

The ritual surrounding the foundation of a new village bears testimony to its persisting political significance. In this ritual the unity of the group, against other similar groups, including the village from which it has sprung, is expressed. On first arrival at a new village site the men build grass sheds, beginning with that of the headman. That night the headman pours a cone of sacred flour at the root of a tree on the site, and asks the spirits of his ancestors whether the site is propitious. Early next morning he examines the cone to see the answer. If a side of the cone has collapsed it does not augur well and another site is selected. If the cone is still whole it is taken that the spirits acquiesce, and permanent huts can be started. The headman then goes into the bush to find medicines[2] which he mixes with groundbeans. That night, with the medicated groundbeans in the hut, the headman has intercourse with his wife. In the morning those who are not usually active come to the headman's grass shed to drink some water in which the medicine has been steeped and eat some of the medicated beans with a little porridge, which the headman's wife has prepared from the sacred flour. This medicine is called 'the medicine to strengthen the village' (*mtowa wakulimbika mwi*). Until then all members of the village should have been continent but after this sexual relationships may be resumed. The object of the medicine is to prevent those

[1] See pp. 50-1.

[2] Mkalangwa and ahoro, two plants commonly used for protection against adultery. See Tao, p. 112.

2: Mitchell E-5 (1946-1949) 1956 FT7 Yao FT7

who are sexually inactive from contracting *ndaka*.[1] At the same time the headman gives each household a piece of the fire which has been newly kindled in the traditional way by rubbing two sticks together.

The mystical danger inherent in the act of setting up a new village is well brought out in the propitiatory prayer and the abstinence from sexual intercourse. Once again it is the village headman who must make the offering to his ancestors; and it is the village headman who has intercourse with his wife so that the effluvium from his sexual activity may permeate the medicine in the hut and so protect the villagers from *ndaka*. Lastly, it is very important that the whole village cooks and is warmed by one fire. 'We are of one fire' expresses the common origin of two villages; though in fact every time a new village is founded a new fire should be kindled. To bring fire from the village of origin is to bring sorcery, since the Yao believe that sorcery can operate between persons closely linked by kinship only. To have one's own fire is to be autonomous from other groups.

The Duties and Rewards of Headmanship

MacDonald had the perspicuity to see not only that the village headman was the representative of a corporate group and that he represented this group to outsiders, but also that he represented external authority to his villagers. The village headman who in his person stood for the unity of the group, performed certain ritual acts which emphasized this, such as praying to the village ancestors. In spite of the decline of the ritual his position is still regarded as exceptional. Much, however, depends on the rank of the village headman. There may not be much difference in ritual observances and mystical dangers between a headman who has in his charge a meagre three or four huts, and a commoner. In the larger and more important

[1] This is one of the most important mystical concepts of the Yao. I have described this condition and its implications more fully in *Marriage among the Machinga Yao of Southern Nyasaland* (R.-L.I. Paper), forthcoming. Briefly it is a disease characterized by sickness which affects those who are sexually inactive when they are suddenly brought into contact with a person, or an object which he has touched, after having intercourse. The people most affected are the young and the old, i.e. those who cannot have sexual intercourse. Those who are capable of intercourse are expected to have sexual intercourse with a stranger, and so finally themselves against this dread disease.

then Ibiwa to an account of the circumstances attending the Ibiwa and death. The point at issue is whether there is any evidence pointing to death from unnatural causes which requires consulting a diviner. The chief practically always agrees with the relatives, and is said that he will never press them to go to the workhouse commonly. The case may end with this conference, or here may begin the long series of events described under [illegible]

During the month subsequent to the funeral, certain taboos have to be observed. The widow may not bathe, and with the exception of the male, all who attended must refrain from sexual intercourse. At the expiration of this period, beer is brewed in the village, and all the friends and relatives are again summoned. This beer-drinking is called "the beer of [illegible]," or "the beer of reinstatement." In addition to the beer, food is provided, and everyone helps himself without ceremony. Chinchinbe is sung and danced and at the present day, bands of trained dancers attend, including sing'sempong' songs.[illegible] A pot of beer is sunk into the ground, marking the site of the dead man's house. The night of reinstatement [illegible] husbands and wives reunited, and the widow may go through ceremonial intercourse with a man appointed for the purpose called Ibiwa or ndele. Sometimes the widow refuses Ibiwa, and is given medicine instead to cleanse her; her body is then no longer "hot" and likely to bring disease to those about her. A widow does not marry again for two or three years. A young man who loses his wife has no longer any standing in her village after [illegible]. He is usually given a present, with the suggestion that he go elsewhere. After the death of an infant, the mother is considered unclean. She sleeps on a mat apart from her husband till after the ceremony of shaving, and then undergoes a ceremonial coitus with her husband — in which case he is called Ibiwa — after which, ordinary cohabitation is resumed. If she has been a widow, or if the child was born "with disease," another man acts as Ibiwa.

The morning following reinstatement, all the fires in the village are extinguished. A fresh fire is then kindled with the fire-drill, lemenge, either in the chief's house or in some spot nearby, and from there, fire is carried to all the houses. The ashes of the old fire, the stones supporting the cooking pots, and the porridge sticks are taken to the cross-roads, and there destroyed. Everyone then shaves all his own hair, head, axillae, and pubis. The custom of the second shaving by the male, described in *Africana*,[illegible] is, I think, an adaptation from the Anyanja. A year later, beer is again brewed, and all the relatives assembled in the village to partake of it. There is dancing, but no ceremony.

The Tao bury their dead in regular graveyards in wooded country, the thicker the forest the better, often two or three miles away from a group of villages. Different villages bury their dead in different parts of the burial ground; relatives are usually buried near one another. Graves are never revisited, and no one would enter a graveyard except at the time of a funeral, and then only after obtaining permission from the chief. Such spots are

[illegible] Tao taboo, p. 300. [illegible] Ibiwa drinking. [illegible] Swanson, op. cit., p. 131.
[illegible] Tao taboo, p. 300 and 31 1. [illegible] Tao taboo, p. 300.

two feet high and fifteen inches in diameter, hollowed out from above for about two-thirds of its length. Many are made with a kind of lees or stand, and some have roughly carved bosses on the outside; these are called "the breasts," doubtless emblematical of women, a large part of whose life is spent in preparing flour (Pl. XV, fig. 18).

The fire-stick. Matches are becoming more widespread year by year and even the knowledge of how to make fire with a fire drill will be lost. The method employed among the Yao is as follows: a flat surface is cut on a piece of partly rotted wood. In the middle of this a small depression is made, and on one side of the piece of wood a groove is cut leading from the flat cut surface. The piece of wood is held firmly on the ground by one person with a piece of old scorched cloth or some charred sticks at the base of the groove. A second person, by rolling a stick of hard wood rapidly between his hands with the point directed against the depression on the flat surface in which a little cool lees have placed, drills a hole into it. The heat developed is sufficient to cause the powdered rotten wood to start smouldering. This is then turned out on the cloth, which is gently waved in the air till it catches fire (Pl. XV, fig. 19).

Boats. With the exception of a small canoe-like vessel, *Mtepipen*, made of rough bark and used for crossing streams, the Yao have no boats. The dug-out canoes which they use at the present day are made for them by the *Anyanja*. In addition to the bark boat, they use a kind of raft made from the pith tree, *Isoqoro*.

Tobacco. The use of tobacco in some form is universal among the tribes of Nyasaland and the Yao are no exception. The method of use varies among the different peoples; smoking, chewing, and snuffing are all practised, but while the *Anyanja* is essentially a pipe-smoker, the Yao takes snuff, although I think only lately he has also taken up smoking and chewing. A short time ago, a Yao who chewed would have been laughed at. The *Anyanja* do not chew but take snuff to a certain extent; the *Angoni* who do not smoke or chew are inveterate snuff-takers; the *Atumbuka*, *Atonga*, *Awanga*, and *Achewa* are pipe-smokers and to lesser degree snuff-takers.

Tobacco is called *ameo* (Zulu, Chin.). It is prepared by sun-curing the leaf, which is then rolled up into a twist and allowed to dry further. The common tobacco pipe consists of a clay bowl, often ornamented, and a reed stem; it was formerly called *ntilongo*, but is now known as *kalio* (Pl. XV, fig. 11). For hemp, *chamba*, the Yao use a water pipe called *ndumbo* (*upondo*, Chin.); this consists of a bamboo water container from which projects a reed stem ornamented by a clay bowl (Pl. XV, fig. 10). The word *ndumbo* is also used for a tobacco pipe.

When tobacco is chewed, a little lime paste *ambale* made from snail shells is put in the mouth "to bring out the flavor," a small clay jar being used to carry the *ambale*.

Both the Wayao and the *Anyanja* prepare snuff by grinding the broken-up tobacco leaves with a stone (a pestle-and), the powder is then turned out into another shard and warmed over a fire. A few drops of a preparation called *mapuli* is added for flavor. *Mapuli* is

[End Plate 15]

[illegible] the village, the ground round the house is hard-done, and the hedges mended. [illegible] (Ceremonial hoe is turned by the head-side of the chief, and after the hoe has been dressed the adzes of the fire used in the hearing are carefully collected and taken to a necklace ("cross-roads," or "dropping of paths") where they are deposited. The chief, as representative of the people, bathes in special medicated water, a decoction made from the bark of mpange and mkomo, and the rest of mpange. This completes the ordinary annual ceremony, at which now fire is not made.

On certain special occasions a more elaborate ritual is carried out; such occasions are the death of a chief, a threatened epidemic of infectious disease, a murder (especially by shooting) and the frequent occurrence of quarrels in the village.

In such circumstances, in addition to the ordinary purifie ceremony described above, the partition sticks of the whole village are removed and all fires extinguished. The decorated sticks and all adzes of the old fire are carried to the meeting-of-paths, where the former are stuck upright in the ground and the adzes piled together; this is done in procession, all the people taking part. On their return to the village [illegible] are fire is made by friction by either the chief or his younger brother—usually the latter; no personal in any other way would nullify the proceedings. Finally all the people bathe in the medicated water and only by the chief or the ordinary ceremony.

In addition to this special form of the purifie ceremony another rite is sometimes performed after the occurrence of a murder or as prophylactic against the spread of epidemic disease. The doctor first makes a kind of trough (kidongoni) from the bark of mmkomo or mpange, and prepares a shelldale (or chipongoni) basket—used as a strainer in sub-sieving. Having collected his medicines he proceeds to the bank of the stream near the usual bathing-place of the village and digs a shallow hole, in which he places the basket; in this he puts the horns of a certain thorny shrub and covers the whole with the trough, which is banked up with earth so as to be perfectly free. He then puts his "medicines" into the trough; these are, first, the head of an ion hornet and a piece of dog, both from a smelting furnace; the top of these he puts pieces of the root of a certain tree which has many and particularly sharp thorns, and bits of bark from two trees peculiar for having very straight stems. Having distributed these evenly along the floor of the trough, he fills it with water and then proceeds to construct an arch over the end of the trough farthest from the stream. Two long poles, one from a kind of tree particularly rich in sap, are planted in the ground, one on each side of the trough and close to it; these are kept over towards each other, and fastened together by means of a strip of bark ropes bark. A bamboo is now planted alongside each, and similarly tied to its fellow. During all these preparations and throughout the ceremony it is essential that the doctor has no knots in any part of his clothing.

The preparations are now complete, and when all the fires in the village have been extinguished the people go in procession to the spot where the doctor awaits them. All must be partly clad and must have no metal about them.

(Lot 9) The chief opens the ceremony. He steps into the trough and taking some of the medicated water therefrom in his hands he rinses his mouth with it. He then (Lot 9) offers a prayer to the spirits of his ancestors, first stating the emergency and recalling the measures which are to be taken to deal with it (now fire, sweeping, dressed of partition sticks and shooting). The prayer over, he splashes the water in the trough over his body and passes through the arch, fire throwing some gifts (beads or, in more modern times, money) into the trough. These gifts, generally (Lot 9) intended as an offering to the spirits, are the perquisite of the doctor, and everybody is supposed to contribute to them.

6. *Wimpu*: this large double basket one half of which fits over the other like a cover, is now very common among the Tao; it was copied from the Swidili Ajumuda. The body is made in the same way as the other baskets, but each half has a broad rim of wood which is always set prettily into patterns (Pl. XVI, fig. 13, and Pl. XVIII).

285
415
[17]

4. *Chimuchi*: the base ring, a small hemispherical basket rendered waterproof by smearing with a sticky substance prepared from the pounded stem of the mysoo tree or from the root of the spurge plant mixed with charcoal (Pl. XVI, fig. 12).

5. *Limuguda* (*Impu*, Chin.): the base strainer made in the shape of chimuqu, but the strips of bamboo forming the warp and the weft are of different thicknesses, so that spaces are left for the fluid to run through (Pl. XVI, fig. 14).

Mats. In years gone by the Tao made a rough kind of plaited matting of split reeds called *shipumdu*; it is not seen today. Another type of mat seldom used today is the *kitchi* (*ichiu*, Chin.), made of a number of reeds of equal length bound together by several rows of interlacing string (Pl. XVI, fig. 7). Reeds are also used to make the *ngmu* (*yuyum*, Chin.) (Pl. XVI, fig. 10). When dry they are split and flattened out with the smooth surface all on one side. A number of reeds so flattened lying side by side are then sewed together with native string, and form a clean, smooth mat for sitting or sleeping.

285

Mats made of plaited strips of sun-dried palm leaf are now in common use, the art of making them, I believe, having been introduced from the coast. Large mats of this kind called *kanchi* are used in the chief's courtyard (Pl. XVI, fig. 9). Smaller ones called *ichiu*, or by the old people *ichiqu*, made from the leaf of the wild date palm, are used for sleeping (Pl. XVI, fig. 6). Since the advent of the Europeans, mat making has become an important industry, and *kanchi* and *ichiu* are to be found in every European house.

A still finer kind of mat, similar in plan and stained in patterns, has lately been introduced by the Swidili. Red and black dyes are generally used; the red is either *ngmuu*, or a stain called *mahanda* prepared from the bark of a tree called *mandu*; the black dye is made from the root of a vine, *Shumqu* (*chimu*, Chin.), the bili bean.

[14]

The matting made of these strips of palm leaf is in the form of a ribbon from three to six inches wide, according to the fineness of the strips. The ribbon of matting is sewed into the form of a cylinder by plaiting the edges of the ribbon together in a large spiral. This cylinder of matting is then cut down one side and laid flat, and the cut edges finished off with a plaited mat border (Pl. XVI, fig. 8). It will be seen that, owing to the way they are made, these mats are never quite rectangular. The ribbon of matting used for the circular mats is sometimes still and twisted round and round in a flat spiral fashion.

Cloth. The Tao in years gone by made a woven cloth, but the art has long since died out, and I have never seen a piece of native-made cloth. I imagine, inasmuch as bark cloth is still worn by the poorer people, that the native-made woven cloth was only worn by the few, probably the chiefs. The older cloth was exclusively bark-cloth, worn, as I

286

* Wa-mara, a tree.

2: Mitchell E-5 (1946-1949) 1956 FT7 Yao FT7

622 559 293 robes (a gown not unlike a woman's dressing-gown), wears a bright-coloured turban, and has one or two men walking behind him, he is a rather important village headman. One particular item of clothing in the Kawinga, Liwonde and Nyambi areas, is the scarlet headband which some village headmen may wear. I shall discuss this later in the context of the competition of village headmen for rank.

622 559 311 Another external characteristic of rank, which seems to have disappeared with the changing economic structure of Nyasaland, was the carrying of knives (*ninjo*) by important village headmen. Previously, status was indicated by the type and size of knife carried in public. The chief usually carried the largest and most ornate. The knife taken from Kawinga on his surrender in Portuguese East Africa was about 18 inches long and had a decorated ivory handle. Smaller knives of similar pattern belonged to his headmen.[1] Nowadays, many young commoners carry knives two or even three feet long, made from the broken blades of motor-car springs.

622 559 291 The right of important village headmen to build fences[2] at the back of their huts is also a mark of prestige which seems to have lost in significance. About 30 years ago only important headmen had the right to erect a fence at the back of their huts. This fence, made of tall grass about six feet high, enclosed the grain stores and other food supplies of the household and formed a private compound in which the headman's wife and slaves carried on their daily tasks.[3] It seems likely that private compounds and slavery were positively associated, so that only the important village headmen who had many slaves found it necessary to build fences. All chiefs and most important headmen to-day still erect these fences. Those who hold initiation rights are obliged to build them because, when the initiands return from the seclusion phase of the initiation ceremony, they are supposed to spend one night in the headman's private compound before going back to their villages. But nowadays, minor village headmen and commoners also frequently build these

[1] See fn. 4, Chap. II, p. 38.

[2] *Lamp*, pl. *mlamp*. The enclosed space or "compound" is *chalandi*. Typical fence compounds are depicted on Plate IX (*a*) and (*b*), facing p. 108.

[3] MacDonald suggests that the common wooden footpaths for women to descend from the *chalandi* lamps—on the other side (of the fence).

Both before and after the introduction of guns, the Tao used spears, lances, and bows, [illegible]
shields. The spear is a five-foot long throwing spear with metal head and wooden shaft. No shield was used. Bows and arrows are made from the wood of the *mao* or pinkingpin tree. The string is made of rattan. A double-bulbed bow called *shanji* (or *shiawa* was sometimes used, but, I believe, originally came from the Ataiyals. The arrows, separate, have a metal arrow-head, and were often poisoned with *kanda*.

Hunting. The same weapons are used in hunting: the gun, the spear, and the bow and arrow. Smaller bows and arrows made with bamboo or *ainal* shaft are also employed for shooting birds, one of the arrows has a blunt wooden head and serves to stun the bird. [illegible]

From the Ataiyals, the Tao learned the use of a harpoon for spearing the Hanyanyin [illegible]
seen. The harpoon is a heavy spear-head of iron about eighteen inches long, attached to a rope and float. From the Ataiyals, also, was learned the use of the falling block with spear for killing bears.

Elephants are caught in stakes pits, and the larger antelopes are similarly trapped in pits with the sides sloping towards the bottom, so that as the animal falls lower and lower with exhaustion, it is eventually suffocated.

Small game are driven by dogs into nets set for long distances in the forest, and then [illegible]
speared or shot. Traps are also set for these smaller antelopes and for many other small animals, rodents, etc. Birds are shot or trapped. Bird-lime is also employed. It is prepared from the latices of a number of trees by pounding the vegetable matter in water, the sticky juice so made is applied to sticks or poles. The sticks are placed near drinking places so that the birds alighting to take water become entangled. The poles are affixed to trees so that they appear to be the topmost boughs, this the native does, recognizing the extreme faith of birds to sit on the very top of trees. The strength of the bird-lime is made according to the size of the bird he wishes to catch.

Fishing. I am not sure how far the Tao is a natural fisherman. But long ago he used only a heavy pointed spear to catch his fish. Since then, he has acquired from the Ataiyals the knowledge of making fish-traps and nets, and of using the fish poison. When the Tao came to live and intermarry among the Ataiyals, there was one practice of the latter which they would not adopt and which caused a good deal of ill-feeling. A Hanyanyin man coming home after fishing always used to prepare the fish and, having some ready to cook, he cooked them for his wife, bringing her water at the same time to wash her hands. After eating his own fish, she cooked the rest for her husband. A Tao would never cook for his wife.

Traps. The following is a list of some of the traps I have found in use among the Tao. The sketches will serve to explain their mechanism better than a lengthy description. Some are very ingeniously made, and most small shelter traps made in other parts of the world.

1. *Cadangil lan lamada*, a trap for the mouse-rat (Pl. XXII, fig. 1).
2. *Cadangil lan ratimal*, a trap for sharp-toothed gnawing animals, so called from

Trapping and catching of animals is pursued with great glee by small boys. They make many of the traps, particularly the two kinds of bliss, *ahipanda*, *ahipanda*, *ahiawa*, *kawa*, and *ngaw*. *Ahiwa* is set in rat runs and the rats are driven into them (Pl. XX, fig. 4). Digging-out rats is a favorite amusement for the boys and brings meat to the pot. Map is the best agent for this sport. They are adepts at recognizing burrows which have rats inside. Digging is commenced at one entry to the rat warren, the assaye being stuck with bits of grass. As they get nearer the rat chambers, they smell the earth and so know when they are quite close to the rats. A bunch of grass is then put in this hole, lighted, and kept alight by blowing on it. One of the rats will try to bolt and is knocked on the head. The head is then squashed to kill him effectually, and the skin of the tail of the first rat is always pulled off the body, "so that they may catch many." They will try to guess how many there are going to be, "two and two and five and two!" Each rat when caught is tested under some earth, so that the hunter will not among down and carry it off. When they have finished rat warren, one of the party is appointed to carry all the rats. He has a string round his waist, and the rats are slipped underneath it and so secured. They then go on to another; the hunter will bear the whole catch for the day and may, before they have finished, have several strings of rats round his body, one above the other.

Digging-out crabs, *ka-kapa-ngalu*, is another favorite amusement for children. On days in to dig up anything like sand which makes a squelching sound). Crabs are never eaten with flour, but always with manioc, the grain banks, " crabs and brown-bread!"

Twelve and girls fish with a rod, line, wire hook, and worm, *ka-kapaga-ambu*, to pull up fish. They also catch fish, using the fish poison, *mbulu*. Birds are killed with a bow and a blunt-pointed wooden arrow.

A small boy, seeing a girl or a younger boy with a *ula* of *ambu* and wanting it himself, will say, " Let me make a garb to the sand!" He will then remove, say a couple of rows of *ambu* grains for himself, *ambu* to the corner of the corner, or "Let me make double" (*Ambu* is a shared bead on the *ula*), or " Let me make the man's *ngaw*!" when two ordinary grains are left, surrounded by a simple ring of other grains, on the girl's portion.

Children are taught a little saying about their fingers which contains one of the "The little pig went to market " of man's infancy. Starting with the little finger, they say:

" *Ahuku* *kangaiku* *kangaiku!*"
"The little one (is) the one which cannot draw water!"

Pointing to the ring finger,

" *Kaiakiapu* *ngangaiku!*"
"The little man's brother (is) the one that grabs the sand!"

To the middle finger,

" *Kangaiku* *ambu* *ambu!*"
"(The brother of) the one that grabs the sand (is) the one who finishes sand!"

In beaten with branches, or leaves are thrown at him. Men join from all the villages. Next day they set out in line towards the nets they have set, the inexperience of the hunt in the middle. Game is driven into the nets by the advancing line of men and their fires and is spared. On the other side of the nets are men set as watchers, who would let down the net at the approach of any big antelope, who would otherwise break it. All the game killed is taken back to the hut chief in the leaves, who window is in the background. At the end of the hunt (sunset) the inexperienced of the hunt chooses his portion after it has all been divided up, and gets a hind leg of every beast killed by the others. The net used is 300 or 400 yards long. Hunting is done in the early morning during the month of July.

The Mukwaja and Chipuna did not hunt elephant, but dug game pits. They used bows and arrows. The Tao, Mukwaja and Amangwato, preserving game in the old days, used to make big hunting parties, staying away two and three months and killing elephant and other game. The leader inaugurating the hunt had the first shot at an elephant, and all ivory was his till sold at the court, where the followers get their proportion of ivory brought back. The skins and horns were divided. The flesh was cut into strips and dried over wood fires. The chief has choice of the biggest tusk on the return of the party to the village. Two elephant were shot in the vicinity of the village, the chief claimed the ground tusk, i.e., the tusk on the side on which the elephant dropped. Before starting on such a hunt the chief would be cast to see that they would have good luck. All those taking part would have "medicine" rubbed into little incisions cut on arms, shoulders, and sometimes on body. Mudwale (medicine) was also tied on the gun; it consisted sometimes of a number of pieces of wood threaded on a string, or I have seen another made of sun-dried animals' blood and charcoal. Should the wife of anyone of the expedition commit adultery her husband might get killed. A man going to hunt will never have intercourse with his wife the night before, otherwise he would be unsuccessful.

Bows and arrows are used, the bows being sometimes about 5 to 6 feet long. The "Mudimamano arrow" is employed, and the arrow rests against the left side of the bow. Three kinds of arrows are carried in the same quiver (pachi): operative, a blunt arrow for stunning birds; sukwa, with a large iron blade; and operative, with a small pointed head.

The Mukwaja use a long-handled, short-bladed spear, usually thrown at a short distance (a few yards), when it is grasped in the hand about the middle. From a further distance (thirty yards) it may be pitched by holding at the extreme end. Traps of various kinds, made of a bent sapling and noose, are commonly used. Dogs are used in hunting to drive, to run down small game and to bay the bigger animals at bay. The only arrow poison used in chiefs, made from euphorbia juice and other things, is to used in warfare and elephant hunting. The flesh of animals killed with chiefs is not considered safe to eat. Children from twelve years of age accompany their fathers hunting.

[illegible] In turn, after drinking, they sit down while the n'wanbla gives instructions that have they obey tonight. He takes his basket and starts to run back to Lepanda, singing:

[illegible] "Ka [illegible] [illegible] [illegible] [illegible] [illegible]"
"Where we must go [illegible] [illegible]"

Then going to the back of his hut, he enters and takes a piece of bark left there bent up into a dish containing medicine which has been put in by an assistant. This assistant holds in his hand the neck of one of the birds which was killed at Lepanda. The n'wanbla washes his face and chest with medicine to cleanse his eyes and then leans forward to the assistant and bites a piece off the neck of the bird which the assistant holds out, and eats it. This is ku-kwetsa, "to taste a small piece," after the fear, before starting to eat the flesh, this is generally done by the most important person. The n'wanbla has been followed by his assistants who do as he has done. They all follow him next round the cooking place for the boys at Lepanda, each standing for a moment on the stones which have supported the cooking pots, while the women sit looking on sadly. He begins to dance and the women join in, singing Khomo. He then calls the parents of the soul and leads them to where the leader was. There assembled, he tells them they must not bathe, and that tomorrow morning early, porridge is to be sent to the soul which must be prepared by a woman who has had connection with her husband and who has not washed her hands; this is supposed to make the boys strong. Early in the morning the husband, who likewise has not washed his hands, carries the food to the soul and possibly gives portions to each boy to eat.

When they have partaken of the food, the circumcision is performed by the n'wanbla who has returned the same morning early. The soul ran by one, commencing with the leader, go forward a little to the place where the n'wanbla awaits them. Each round is accompanied by his relations who commonly says, "Come along and you shall see of the honey made by the bumblebee." Each honey is very sweet and called manna. This refers to metaphor terms to the pain the boy is about to undergo. The boy squats down, leaning back on his relations who supports him, while the medicine-man, having washed the hut out to cry out, performs the circumcision with a small knife called shamela. It is a triangular knife with one cutting edge and a handle produced from the opposite corner. Properly the Tsw method is, I believe, only to nick the free margin of the prepuce just to the right of the middle line near the frenum, but complete circumcision is now commonly practised, possibly as the result of Swahili influence. In this case, the prepuce is seized and held by the fingers, and division made by a circular incision without using a clamp or blunt stick. A dressing of charcoal and oil may be applied or medicine is chewed in the mouth and the saliva spat on the wound and the boy sent on to rest under some convenient tree.

When all the soul have been circumcised, they are gathered together in one place and the n'wanbla dividing them into groups, puts on the neck of the leader of each group a necklace made of plaited bark from the palmyra tree. These necklaces contain medicine [illegible]

[illegible] have said, to this day, and also appearing on the proper dress in all ceremonies. Clothing nowadays, among the majority, consists of cotton cloth bought in by traders and further adorned in native fashion.

287 Bark-cloth, Sumale (Mimusoh, Chin.): made by the men. A piece of bark about two feet by one is cut from the living tree; the outside portions are removed and the whole piece, after being well scraped, is soaked in water. When partly softened, it is removed and beaten out with a wooden mallet; the process is repeated till the piece of bark is soft enough to enable it to be wrung in the hands, then further beaten by the [illegible]. The soaking, beating, wringing, and pulling are continued till a piece of cloth from by five feet is obtained. This is non-elastic and yields a soft, pliable, and warm material. Several pieces may be sewed together to make a large sheet. Bark-cloth is sometimes stained black by soaking it in a kind of thick mud found on the plains. The outlet wooden of a piece of hard wood with serrations on its face, held in a split stick handle; it is called mimoure. A log of wood with a flattened surface, called mimpuri, plays the part of the anvil, the man who is using the mallet usually sitting on one end of the log.

281 Skins. The Tao are unacquainted with the art of tanning. Skins are prepared only by drying, and then softened by hammering with stones. They are not employed as articles of clothing but the larger ones are used to sit upon, the skins of the leopard and the lion being reserved for chiefs. Others are used to make bags to carry flour, for powder powders, and to cover guns. The blacksmith's bellows are made of goat's skin.

283 String, Ishenji (Mimpum, Chin.): Two kinds of string are made, one from flax, the other from the inner part of the bark of the baobab tree. Fishing nets are made from the former, game nets from the latter.

316 Metals and metal working. The only metal ever obtained from the ore by the Wapoe are iron, and it is probable that they learned this from the Angoro and Angonja. The industry is now nearly dead since the introduction of trade articles. A few blacksmiths still ply their trade, but their work is restricted to the manufacture of knives, spear-heads, and razors. Hoes are no longer made. The iron blade supplied by traders is in the form of the old native-made article, which had in turn displaced the older hoeing-stick. The blacksmith deals with the ores of metal by hammering it with stones. He provides himself with bellows, a small iron hammer, and a rudimentary kind of tongs. He is called mwitipale.

319 Stones. The only important uses for stones among the Tao are for supporting the cooking pots on the fire, for heating water in some medicinal preparations, and for grinding millet. For this last purpose, a large flat stone, inclined at an angle, is set up in some convenient spot, often on the veranda, and the grain is ground by means of a smaller stone held in the hands.

● 315. [illegible] The flour pestle and mortar. Millet flour is prepared by pounding the grain in a big wooden mortar, by means of a wooden pestle, consisting of a pole some five feet long and four inches in diameter with round ends. The mortar consists of a tree trunk about

two feet high and fifteen inches in diameter, hollowed out from above for about two-thirds of its length. Many are made with a kind of base or stand, and some have roughly carved faces on the outside; these are called "the beauts," doubtless antimacassars of women, a large part of whose life is spent in preparing flour (Pl. XV, fig. 18).

The fire-stick. Matches are becoming more widespread year by year and soon the knowledge of how to make fire with a fire drill will be lost. The method employed among the Tuo is as follows: a flat surface is cut on a piece of partly rotted wood. In the middle of this a small depression is made, and on one side of the piece of wood a groove is cut leading from the flat cut surface. The piece of wood is held firmly on the ground by one person with a piece of old scrubbed skin or some shaved sticks at the base of the groove. A second person, by rolling a stick of hard wood rapidly between his hands with the point directed against the depression on the flat surface in which a little soft bast has been placed, drills a hole into it. The heat developed is sufficient to cause the powdered rotten wood to start smouldering. This is then turned out on the skin, which is gently waved in the air till it catches fire (Pl. XV, fig. 16).

Boats. With the exception of a small canoe-like vessel, *Ahuiyuo*, made of rough bark and used for crossing streams, the Tuo have no boats. The dug-out canoes which they use at the present day are made for them by the Anyanuja. In addition to the bark boat, they use a kind of raft made from the pith tree, *Sangwa*.

Tobacco. The use of tobacco in some form is universal among the tribes of Nyamlani and the Tuo are no exception. The method of use varies among the different peoples; smoking, chewing, and snuffing are all practised, but while the Anyanuja is essentially a pipe-smoker, the Tuo takes snuff, although I think only lately he has also taken up smoking and chewing. A short time ago, a Tuo who chewed would have been laughed at. The Anyanuja do not chew but take snuff to a certain extent; the Angosi who do not smoke or chew are inveterate snuff-takers; the *Ainambuku*, *Ainuaja*, *Ainuaja*, and *Ainkonde* are pipe-smokers and in lesser degree snuff-takers.

Tobacco is called *uwa* (Jaluo, Chin.). It is prepared by sun-curing the leaf, which is then rolled up into a twist and allowed to dry further. The common tobacco pipe consists of a clay bowl, often ornamented, and a reed stem; it was formerly called *ahinuja*, but is now known as *kalu* (Pl. XV, fig. 11). For hemp, *chemba*, the Tuo use a water pipe called *ahinda* (*ngonda*, Chin.); this consists of a bamboo water container from which projects a reed stem surmounted by a clay bowl (Pl. XV, fig. 12). The word *ahinda* is also used for a tobacco pipe.

When tobacco is chewed, a little lime paste contained in a small shell is put in the mouth "to bring out the flavor," a small clay jar being used to carry the contents.

Both the Wapuo and the Anyanuja prepare snuff by grinding the broken-up tobacco leaves with a stone in a pestle; the powder is then turned out into another shard and roasted over a fire. A few drops of a preparation called *magwali* is added for flavor. *Magwali* is

3:Stanner D-5 (ca. 1912) 1922 FT7 Too FT7

415
531

276

276
412
372

1-10, POTTERY; 11-14, PIPES; 15, GRAIN MORTAR; 16, FIRE DRILL

[End Plate 15]

Other hypothetical diseases which are caused by disbelieve to women are mentioned [illegible] *under various other headings. Kanjo: a disease generally characterized by elevation of* [illegible] *the legs but in some cases by pains in the back, or loosely used for a variety of symptoms,* [illegible] *is said to be caused by the entry into the body of a worm which lives in water-pools. This* [illegible] *worm which I have had identified is a gordius worm and not known to be parasitic in man.* [illegible] *Lamai: When a man kills another in battle, he will sit upon the body of his victim; other-* [illegible] *wise he believes he will sicken, with heat and his own belly will swell up like that of the* [illegible] *corpse when putrefaction sets in. He is supposed also to hunger after more killing and blood.* [illegible] *Lilungo is the name of a supposed disease which kills off one child after another in a family* [illegible] *when they are about six months old. Congenital syphilis naturally suggests itself but I* [illegible] *have never been able to verify this idea. Lilungo lya Imbiri: a supposed disease which* [illegible] *causes the death of the first child when the second is born, the second when the third* [illegible] *is born and so on, whatever the intervals between the births. Each child is said to* [illegible] *push (ku-sisi) the previous one out of this world. Under these circumstances the disease* [illegible] *is ascribed to something wrong with the mother or father and they are examined by a* [illegible] *medicine-woman or medicine-man, and any excrescence or an external pile found will be* [illegible] *cut away.*

If a snake bites (ku-lima), the man will prove fatal. If a crocodile seizes a grunting [illegible] *sound when seizing its victim, though he escape he will certainly die.*

Treatment of diseases. Of surgical treatment there is very little to be noted. Nothing in [illegible] *the way of operation is performed with the exception of circumcision (see Legends).*

As abscess is allowed to burst, the smallest tumor is left untouched, but necessary digits [illegible] *which are not sore, attended only by a few pustules, are amputed off.*

The natives cannot extract teeth. They are incapable of rendering any assistance in [illegible] *cases of difficult labor. Dislocations are not recognized as such, but fractures are treated* [illegible] *by the application of wooden sticks placed at intervals round the circumference of the limb* [illegible] *parallel to it and held in position by twisted pieces of bark string (Pl. XXII, fig. 3). The* [illegible] *principle of the tourniquet appears to be unknown.*

The only instruments used consist of a small knife for incisions, a cupping-horn, and a [illegible] *primitive form of funnel for administering enemata (Pl. XXII, figs. 1, 2, 4). The knife has* [illegible] *a triangular blade with a stem which is commonly twisted at one of the corners. The knife* [illegible] *is used for wet-cupping, tattooing, and circumcision (Pl. XXII, fig. 2). The cupping-horn* [illegible] *is a small horn of a calf. The open is pierced and after application to the part, suction is* [illegible] *made with the mouth and then the hole sealed by working a piece of beeswax over it with* [illegible] *the tongue. Six small incisions are made in the skin for the withdrawal of the blood. The* [illegible] *cupping-horn is called chowi (ishowiza, Chin.). Cupping is used for headache and for pain* [illegible] *in the chest and back. The enema funnel, chipelpa (ishiblo', Chin.) is made from the neck* [illegible] *of a gourd to which is attached a hollow straw for introduction into the anus. Half a pint* [illegible] *of an infusion of tamarin is injected for constipation associated with pain.*

[End Plate 22]

2: Mitchell E-5 (1946-1949) 1956 FT7 Yao FT7

622 559 693 ministry. This recognition publicly announced their superior status, because not all headmen could be Administrative headmen. We do not know exactly how the Administrative headmen were appointed when the Ordinance was introduced. The observable results, however, are that no headman, as far as I am aware, who was of superior status in the indigenous ranking system, is not an Administrative headman to-day. Being an Administrative headman is then in itself an indicator of rank.

Rather more important than this is the right to hold initiation ceremonies. MacDonald says that these rights were held by the chief only, but it is not clear whether the word 'chief' used here refers to the village headman or the 'chief of the land'. Nowadays, the rights are held by village headmen as well as the chief. The right to hold initiation ceremonies is signified by the possession of a small flat basket (*ziwele*) in which the oblational flour for the ceremonies is carried. When a chief grants a *ziwele* or oblational basket to a village headman, what in fact he does is to grant him permission to approach the spirits of his ancestors. The headman uses the basket on three occasions during the initiation ceremonies. First, before the ceremony is announced he pours a little cone of sorghum meal at the root of a special tree in or near the village. This tree is known as the *nanlo*, or the shrine-tree where all offerings to the ancestors are made. While he works the flour through his fingers to allow it to fall in a cone, he calls on his ancestral spirits and asks them to intercede on his behalf with the spirits of the chief's ancestors. He then formally requests permission to hold the initiation ceremony. This cone is left intact through the night. Should it collapse the interpretation is that the spirits are not willing that the ceremony should take place and it is postponed for some days. Offerings are made until eventually the cone, by remaining intact through the night, indicates that all is propitious for the ceremony to be conducted. The second occasion when the oblational basket is used is when the village headman or chief goes down to the grass sheds where the rites of segregation and aggregation take place. Here he pours flour over a twig and begs the safe conduct of the initiands through this physically and mystically dangerous period. Third, each individual initiand, and his or her mother, is touched on the forehead and forearm with the flour on the evening that the initiands leave for the grass sheds. During

622 559 693 695 698 699

622 559 693 695 698

2: Mitchell E-5 (1946-1949) 1956 FTT Yao FTT

the last rite the owner of the chiwinsi basket exacts a payment of threepence or so from each parent. The headman does gain financially from the initiation ceremony, but it would be wrong to imagine that this is the only reason why he should want to have the right to hold it. The competition for the rights, which are limited to a few, is part of the general political process whereby village headmen compete for privileges and advantages over their fellows.

Village headmen may hold either the boys' or the girls' initiation ceremonies, or both. Sometimes, when they hold both, they delegate the girls' ceremony to a younger brother or some other relative without referring to the chief. For example, Kawinga's clan relative and important retainer, Ngalewanga, had the rights to both initiation ceremonies, and he allowed his perpetual 'son' Isa[1] to hold the girls'. Also in Nyambi area, Mapeja, who had both initiation rights, allowed his perpetual 'son' Nantunga to have the girls' ceremony. It is generally conceded that the right to hold the boys' initiation ceremonies is more valuable than the right to hold the girls'. H. L. Duff, writing in 1906, had also noticed this when he wrote:

> The respective ceremonies seem to be considered as on a somewhat different footing, for the boys' *isyapo* can properly be held only at the village and under the patronage of, so to say, the paramount chief of the neighbourhood, whereas the girls' initiation may take place under the auspices of an inferior headman. This distinction is still jealously observed and any breach of the chief's privileges is apt to lead to bitter dispute.[2]

The sanction the chief holds over the headmen in this respect is mystical. A village headman believes that the initiation will be a success (that is, that the initiands will be free from the harm of wild beasts and illness, or the circumcision wounds of the boys will heal quickly and well), only if the approval of the chief's ancestors is obtained. He cannot hold the initiation ceremonies, unless he has obtained the basket from the chief.

Most people still follow tribal initiation customs, but in the extremes of the area in which I worked, religious ideas are bringing about a change. In the north in Jalasi's area where Islam

[1] The first Isa was the son of Ngalewanga and this relationship is preserved by the modern incumbents of the headmanships. See Chap. V, p. 122.

[2] Duff, H. L., *Nyasaland under the Foreign Office* (London, 1906), 312.

2: Mitchell E-5 (1946-1949) 1956 FTT Yao FTT

632 neglect neither his security-group nor the husbands in his village,[1] that his security-group and his village were his garden and he must take care of the young plants in it. The husbands were the watchmen who look after the women in the village. A headman dare not take sides or be unfair, nor must he talk behind people's backs. He must take care to settle differences amicably by discussion at meetings. They advised him not to pay too much attention to his wives who may have quarrelled with his sisters and tell him that they have been insulting him. When he hears a report like that he may be unfair to his sisters and people will say that he has broken his village through listening to nonsense. This sort of instruction went on through the night.

On Friday when the beer was brewed, Mlambo and Mbelwe, both headmen and perpetual sons of Nyumbi, came to the village [349] and told the men to build a small grass shed for the successor to sit in. This the men did, and the women were told to plaster it and clean the huts out for the strangers who would be coming to the ceremony. On Saturday morning before cockcrow, Makoka and Ncimbo got up and told the women to cook a big pot of porridge because they were taking Cimombo to bathe and when they returned they would want to find porridge ready. [485] Makoka took some medicine called *ukulume* in a bark container [751] (*likungwa*) into the toilet enclosure. He put the medicine into two jars of water and told Cimombo to wash himself in it daily as he was an important headman, and it would strengthen his 622 body.[2] After Cimombo had washed he went back into the hut where a mat was spread on the floor and on it were a dish of 266 porridge and three dishes of relish. Makoka and Ncimbo told him to take a little porridge, dip it into one of the relishes—whichever he chose—and eat it. Cimombo did so. They did not tell him that one of the dishes contained human flesh.[3] When he tried the dish of human flesh he vomited and all the villagers cried with joy, saying that he was a good chief because he had

[1] *Mlambo jao ni akamwini wao*—the meaning and significance of this in the village context is explained on p. 183.

[2] This is a euphemism for protective medicine against sorcery.

[3] The immediate question is: Where did the human flesh come from? No informant could tell me and I am inclined to believe that one of the dishes is 'ritually' made into human flesh for this ceremony. This special ceremony was always spoken about as if it were secret, especially from White people.

538 "[illegible] [illegible] [illegible] [illegible]"
"[illegible] [illegible] [illegible]"

in which the listeners ululate

"[illegible]"
"[illegible]"

At the completion of each sentence in the story, one of the listeners will ululate, "[illegible]" When he has finished his story, he says,

"[illegible] [illegible] [illegible] [illegible] [illegible] [illegible] [illegible]"
"Take off the fire, the little mouse has it; he stayed, by the hand it is very hard, the hole (is) in a hung[illegible]"

During the intervals of a long story, one of the listeners may break in and sing some little song, such as the song of the animals in the story of the gentle man, thus giving the story-teller a rest.

542 The house and household utensils. The Yao house does not differ greatly from the Nyasaja habitation which I have already described elsewhere.[1] The accompanying figure (Pl. XIV, fig. 10) gives the circular plan of a hut with a veranda partly open and partly enclosed to form a room. The central pole of the hut is indicated, the hearth (H), the position of the sleeping mats (M), and the place where the water pots are kept (P). The
552 bed may be a bamboo platform supported by forked sticks a foot above the ground (camp-bed), or a slab of wood, over which is spread the sleeping-mat, square. (Pl. XIV, fig. 14.) Seats, stools, are made of logs of wood with conveniently placed branches acting as legs. I have seen a symmetrically carved log with shaped legs all in one piece, which suggested by its form and by the presence of a hollow on the middle of the under surface that it was made in the imitation of an animal. Plank seats with peg legs are now sometimes seen. Wooden pegs are driven into the wall and serve to hang odd articles upon.

[558] The hearth is simply a shallow depression in the mud floor, around which are placed three large stones to support the cooking pots. Sometimes a canopy is built over the hearth, consisting of four upright poles supporting a platform made of reeds and grass, upon which millet and other seed grains are often stored. From this platform lipale (lenje, Chin.), the gourd containing the supply of salt is often hung. The seed grain tied up in little bundles is suspended from the lipale where it becomes very dry and smoked, without any ill effect to the next year's crop. (Pl. XIV, fig. 16.) Four pronged branches of trees are often stuck in the ground with a string tied around the prongs, and used as holders for gourds, salt bottles, etc.; this device is called lipanda (phanda, Chin.). (Pl. XIV, fig. 16.)
419 The smaller utensils include the partridge whistling stick usile (Yao and Chin.) (Pl. XIV, fig. 13), several wooden spoons chikwai (chipanda or cumulowe, Chin.), (Pl. XIV, figs. 11, 12), a number of gourds of various shapes and sizes used as bottles and drinking vessels,

[1] "Notes on some tribes of British Central Africa," op. cit., p. [illegible].

and the baskets and pots. A wooden fish relief may be seen occasionally, but of late years this has been generally replaced by recorded articles.

Around the entire hut, or simply enclosing a yard behind it, there is often a fence about five feet high. In the enclosure thus formed, many household duties are performed, such as the pounding and sifting of grain. The grain store spoken often stands in this yard with the pigeon-loft and possibly a hen-house or goat kraal; these are sometimes found in the open space at the front of the house. If a grain store is built within the hut kraal, it is then known as *ukungu*. Near the pigeon-loft will be seen a pole with prongs supporting an old pot with water for the pigeons to drink. In a tree in the back nearby, there may stand a feeding, consisting of a bark cylinder. Similar cylinders are sometimes used as pigeon-houses.

The large pots for brewing beer are usually set in the yard or on the back veranda, together with a basket of split bamboo for carrying fowls, *ukuhlanda* (Tsw and Chin.).

Gourds. Gourds are grown in the village for use as vessels of various kinds. Different shapes serve different purposes; names are given them according to use rather than shape, though there more or less coincide. Ladles for water or beer, *umemelo* or *ugqu* (*umemo* or *ukhu*, Chin.) are usually long-handled gourds (Pl. XIV, figs. 7, 8, 9). Drinking vessels for beer, etc. *ukiyanda* and a specially large one, *umemba* are usually of the shape illustrated in Plate XIV, fig. 1; sometimes they are like fig. 4, but this shape is more commonly used for water. *Lejanda*, the type illustrated by fig. 5, is also used for drinking or for holding grain. Oil flasks, *ukinsi* (*inupa*, Chin.), are usually of the double-bulbed type (figs. 6 and 9). Salt bottles, *ukinsula* (*ukipuru*, Chin.), are similar to oil flasks. Bottles, *umyu*, used as dancers etc., are also made from gourds, often from those with tubers, *ion* (fig. 3). Other uses for gourds include pipes, snuff-boxes, snares, funnels, and resonators for musical instruments.

Pottery. The art of pot-making appears to have been known to the Tsw for a very considerable period. There is no history relating to its introduction among them. The art is in the hands of the Tsw women. As among all Nyamkani tribes, a particular kind of clay is used and no admixture with any binding substance is made. The pots are simply moulded by hand from base to brim and, without the aid of any wheel or other device, wonderful symmetry is attained.

After drying, the pots are fired by being set on their bases on the ground and a wood fire is made round and above them. They are then sprinkled with an infusion of the *ipungwe* or *ukuski* tree, a kind of millet being used for the purpose, after which the pots are set upon a fire and millet husks are thrown into them and allowed to be incinerated. These customs, a kind of christening of the pots, "insure their turning out well."

No glaze of any kind is used, but they are sometimes coloured red by boiling with a pigment called *ugwa*, prepared from a red sediment found in sluggish streams. The preparation of *ugwa* is in the hands of men and women who make a trade of it, such as a man called

[illegible] Wyul near Sanaha. Sandstone pots are also utilized all over the outside or in patterns with orange, a natural graphite.

Potsherds of a simple character, often of the boiling bowl order, are commonly grouved about the neck of the pots with the aid of a stick of bamboo. There is considerable variety in the size and shape of the pots made. As with gourds, the pot takes its name from the use to which it is put and not from the shape or size. All pots have rounded bottoms; some have a flattened base or standard.

The following variables of pots may be mentioned:

1. *Lotenda*, large pots for hair-washing. These are usually roughly made and seldom have any decoration on them; they stand about two feet high and are wide-mouthed (Pl. XV, figs. 1, 4).

2. *Londa* (*ulonda*, Chin.): water-pots. These are usually well moulded and well finished pots, full bellied, with broad base and a certain amount of neck. They are practically always decorated and often coloured. They are about twelve inches high and twelve inches across the broadest diameter (Pl. XV, figs. 2, 3, 10).

3. *Chinlaga* (*ulinda*, Chin.): cooking pots used for cooking the flour porridge, *upuh*. These are wide, open-mouthed pots six to ten inches high, with belly and more or less straight sides (Pl. XV, figs. 5, 6, 7). This name also applies to the cooking vessel for medicinal concoctions.

4. *Chijungu* (*ungulu*, Chin.): smaller pots of the same type as 3, used for cooking beans, fish, green stuff, and the relish *ndungu* (*ndunu*, Chin.) (Pl. XV, fig. 8).

5. *Ifinda* (*ulinda*, Chin.): the bath water pot. The smallest pot used for heating water to bathe the husband after sexual intercourse bears the same name. It is found among both the Anyanja and the Wayao (Pl. XV, fig. 9).

6. *Ifinda* (Yao and Chin.): the plate, a shallow, wide-open vessel.

Baskets. The basket work of the Yao is all of one type and is done by the men. All baskets are made of plaited strips of bamboo, the free edges of the strips being bound between thicker pieces of the same wood forming the rim, the binding being done with the sinew of a creeper. They are made in various shapes and sizes. Some are rendered waterproof and used as bore vessels. The following types of basket are in use:

1. *Chinda* (*lukuru*, Chin.): a circular, open basket, shallow and wide, six to ten inches in diameter; it is used as a food dish or to measure flour, etc. *Chilungu* (*nungunu*, Chin.), a rather larger one of the same shape, often decorated with beads is used to carry flour, while a still larger basket called *uliputa* is commonly used by the women for winnowing out the chaff from the partly pounded maize (Pl. XVI, figs. 11, 12).

2. *Lulidula* and *ulipunda* (in Chin., both are called *ulungu*): deep baskets usually about as deep as they are broad; the bottom is approximately square, but the rim is circular. *Chilunda* is about six inches high and six inches in diameter; *lulidula* is about a foot in all dimensions. These large baskets are used for carrying any food-stuffs in bulk, e.g. grain and pumpkins (Pl. XVI, fig. 16).

3. *Wimpoi*: this large double basket one half of which fits over the other like a cover, is now very common among the Yao; it was copied from the Swahili *kipandi*. The body is made in the same way as the other baskets, but each half has a broad rim of wood which is always set prettily into patterns (Pl. XVI, fig. 18, and Pl. XVII).

4. *Chimoshi*: the lower wing, a small hemispherical basket combined *mwangwai* by sewing with a sticky substance prepared from the pounded stem of the *mpoon* tree or from the root of the *mpoon* plant mixed with charcoal (Pl. XVI, fig. 12).

5. *Limangale* (*lingu*, Chin.): the lower container resembles in the shape of *chimoyo*, but the strips of bamboo forming the warp and the weft are of different thicknesses, so that spaces are left for the fluid to run through (Pl. XVI, fig. 14).

Mats. In years gone by the Yao made a rough kind of plaited matting of split cane called *chipanda*; it is not seen today. Another type of mat seldom used today is the *kidulo* (*ldulo*, Chin.), made of a number of canes of equal length bound together by several rows of interlacing string (Pl. XVI, fig. 7). Reeds are also used to make the *ngwan* (*ngwan*, Chin.) (Pl. XVI, fig. 10). When dry they are split and flattened out with the smooth surfaces all on one side. A number of canes so flattened lying side by side are then sewed together with native string, and form a clean, smooth mat for sitting or sleeping.

Mats made of plaited strips of sun-dried palm leaf are now in common use, the art of making them, I believe, having been introduced from the coast. Large mats of this kind called *kanda* are used in the chief's courtyard (Pl. XVI, fig. 8). Smaller ones called *mkeka*, or by the old people *mlungu*, made from the leaf of the wild date palm, are used for sleeping (Pl. XVI, fig. 6). Since the advent of the Europeans, mat making has become an important industry, and *kanda* and *mkeka* are to be found in every European house.

A still finer kind of mat, similar in plan and stained in patterns, has lately been introduced by the Swahili. Red and black dyes are generally used; the red is either *mpoon*,[1] or a stain called *mshanda* prepared from the bark of a tree called *mundu*; the black dye is made from the root of a vine, *lilungu* (*ldilun*, Chin.), the Irish bean.

The matting made of these strips of palm leaf is in the form of a ribbon from three to six inches wide, according to the fineness of the strips. The ribbon of matting is sewed into the form of a cylinder by plaiting the edges of the ribbon together in a large spiral. This cylinder of matting is then cut down one side and laid flat, and the cut edges finished off with a plaited mat border (Pl. XVI, fig. 6). It will be seen that, owing to the way they are made, these mats are never quite rectangular. The ribbon of matting used for the circular mats is narrower still and sewed round and round in a flat spiral fashion.

Cloth. The Yao in years gone by made a woven cloth, but the art has long since died out, and I have never seen a piece of native-made cloth. I imagine, inasmuch as bark-cloth is still worn by the poorer people, that the native-made woven cloth was only worn by the few, probably the chiefs. The older cloth was undoubtedly bark-cloth, worn, as I

[1] Vide supra, p. 141.

[End Plate 3]

[Epd Plate 14]

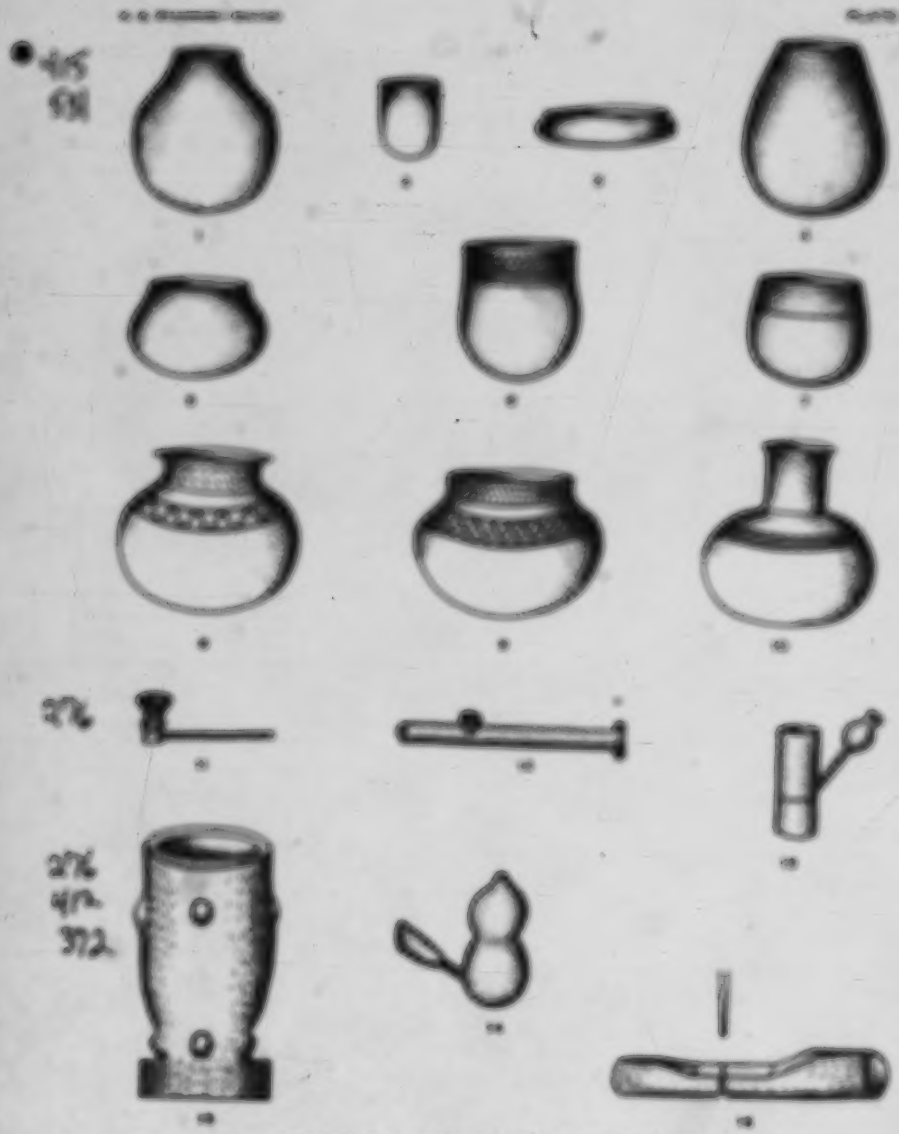

[End Plate 15]

[Expl Plate 16]

4. Diseases D-G (ca. 1909)1910 577 Tao 577
Marsh 784

Journal of the Royal Anthropological Institute, Vol. XL, 1910, Plate XXVII.

WITCH DOCTORS OF BRITISH CENTRAL AFRICA.

[p. 334(B)]

4: Stannus D-5 (ca. 1909) 1910 FT7 Yao FT7
Maravi FR4

M 535

and the feature of it was the introduction of life-size representations of animals made of bamboo and grass with men inside.

I once saw these at a *namwali* ceremony among the Awisa (q.v.).

12. *Nkula.*—Woman only present; danced on the occasion of a girl's first menstruation.

13. *Litiwa.*—Women only, on the occasion of the quickening with first child.

Y 535

14. *Njeula.*—Men and women, a quick shuffling step while standing in a circle.

15. *Sukusu.*—The body shaking (shoulders) dance of boys, they walk round in a ring, some fifty of them, the drums in the middle; when the bass drum breaks into a quicker time they all start shaking shoulders and bodies with intervals for two or three steps.

16. *Nanja.*—Danced in a circle, men and women alternately.

17. *Nkonde.*—A big dance with *sanji* rattles.

18. *Chilende.*—Dancing boys dance.

19. *Mferusu.*—(1907) men and women; each carries a bango reed filled with pebbles—no drums.

20. *Mangenji.*—A coast dance; palm leaf bags filled with pebbles are tied on the legs.

21. *Sanji.*—A *pas-de-deux*, each man with a rattle and head-dress; for a few moments they wander round each other picking up the time and tune, and then jump into a very fast step dancing and jumping into the air shaking the rattles.

22. *Chimaviavini.*—A *pas-seul* by a man carrying a viol and bow with anklets of small sticks.

Y M 535

23. *Mnawe.*—Danced no longer. At Mponda's village a big crowd used to dance with skins round the loins and wooden anklets: in their hands they carried live snakes which had been rendered harmless by putting medicine over their holes before digging them out. Four drums as in *chindimba* were used. The women all fled away.

Description of Plates.

PLATE XXVI.

M 789 778 534 412

1. Iron tube with human hair.
2. Tortoise-shell containing "medicine."
3. Leaf packet of "medicine."
4. Tortoise-shell.
5. Iron knife.
6. Horn containing "medicine."
7. Seed rattle.
8. Bead amulet.
9. Stuffed squirrel skin.
1–9. Contents of the bag of an *Ulu-ana.*

PLATE XXVII.

M Y ● ●415 787 534 276 531

1. Gourd vessel, Yao.
2. Gourd rattle, Yao.
3. Drinking-gourd.
4. Gourd for eating bits.
5. Makanja.
6. Assaikings.
7. Awisa.

4: Stannus D-5 (ca. 1909)1910 FT7 Yao FT7
Marayi FR4
NJONI FR6

M Y 241 M Y [423] N [422] only implement used. Sowing is done after the first rains, about November; the harvest takes place in May to July. Gardens are at varying distances from the villages, depending partly on the soil becoming exhausted after years of cultivation. Boundaries are marked by leaving a line of uncultivated ground, sowing a line of a different crop, tying knots in the young crops at intervals, ditches, etc. In starting a new garden, woodland is often taken; the trees are cut down, leaving stumps 3 feet high; the undergrowth is cleared away and burnt, the ashes distributed over the land, which is then hoed, really very superficially; the earth is then made up into little heaps with a central hole in each, after the first rains four or five grains of the cereal (maize, millet) are dropped in each and covered with earth; as the young shoots grow the hole is more and more filled in.

FIG. 6.

With the cereal is planted the seed of peas, beans, pumpkins, the former on coming up then grow up the maize stalks. The seed is last year's product and not specially selected.

M Y [343] [417] M Y [251] Depredations among crops made by elephant, hippopotamus, large antelope (eland and kudu), pigs and baboons, vary in extent in different districts. Little grass huts are built, raised above the ground like a pile-dwelling, in which watchers are stationed. Fences, sometimes extending for miles, are built. The gardens of the chief are hoed by his slaves or the people of the village. Maize is collected in the cob, and after the outer coverings have been removed is stored; so is the sholwe, millet in the head; beans and peas are stored in baskets. Medicine is put on the ground to ensure a good crop, and a piece of stick is sometimes hung up for good luck.

CATTLE, ETC.

N 231 [422] The keeping of cattle is practically restricted to certain tribes living in districts free from tsetse-fly (Angoni, Wankonde); among these people wealth is reckoned by cattle. The milk is little used; the flesh is eaten only when an animal dies. Marks of ownership are made by cutting the ears (*Fig.* 8). Cattle are kept in open kraals by Angoni, in a compartment of their houses by Wankonde; they are tended by the small boys as a rule. Goats and sheep are kept all over the country. Castration of cattle is a recognised practice (*bufalo*).

N 281 Angoni make their shields from cattle skins; their spear handles are covered with goat hair (beard); hair anklets and armlets in dancing costume are made from goat hair. Skins are used as drums to a small extent.

HUNTING.

M 224 A man intimates to the community around that he is making a hunt by clothing a boy of about ten years in leaves, who precedes him and the men from his own village through adjacent villages; at each village the lad has to lie down and

567 **Slavery.** Slaves were acquired by capture or purchase, or were received as payment. Prisoners taken by the vassals of one chief in a fight with the partisans of another chief became slaves. Slave raids were also made by the Wayao upon the weaker Anyanja or again expeditions were sent out hundreds of miles away into the Chipeta country to buy slaves.

[422] Slaves were a man's goods and chattels, to do with mainly as he pleased, but no man might kill a slave without bringing the case before his chief and obtaining consent. While some were bought and sold and sometimes found their way into a slave caravan bound for the coast, many, perhaps the majority, lived the life of ordinary individuals in the villages. A man who was unhappy in a village and wished to escape from his vassaldom might run away to another village and there commit some act so that he might be claimed as a slave. The custom was to go to the village and sit by the site of a house which had been pulled down after the death of the occupant, and the saying is, "He has been called by the dead man's spirit."

[554] Many a slave has become an important man in the village and slaves were often the trusted advisers of their chiefs, but there was no means of becoming a freeman. Neither a slave himself nor a second party could purchase his freedom. A slave capturing another man in warfare, for instance, could not ask for his own freedom in exchange for his captive, but anyone so taken became, in a way, the slave of a slave, and the master could not sell the second slave without the permission of the slave captor. An old slave might often be allowed to do just as he pleased and to all intents and purposes was a free man, but he was never actually freed. A slave might earn a return for work done for others than his master; part of this he would probably give to his master, but there was no regular tax upon such earnings.

The idea in accumulating slaves seems to have been to increase the population of the villages and hence their power and progeny. This is borne out by the fact that marriage [582] between free men and slaves was allowed. Marriage between a free man and a slave woman was unaccompanied by any ceremony and was therefore rather in the nature of recognised concubinage. Such a wife, if unsatisfactory, could be sold out of the village, but generally she was well treated. The children of two slaves were of course born into slavery; the children of a slave woman by a freeman husband, were not quite emancipated, as the father could not remove the child from the village of the slave mother's master, and in very extreme cases, it might be sold by him.

Women might marry slave husbands and often a master married his daughters to his slave men whom he thought well of. This amounted to a guarantee to the slave that he [421] would never be parted with. A woman with a slave husband could not leave him informally; she could not sell him, inasmuch as women have no property.

643 423 **Land Ownership.** The ownership of all land was vested in the chief, but he appeared to hold it in surety for all the people over which he ruled. Headmen had no land rights.

II. The Political Structure
BEFORE THE WHITES CAME

173 643 167 (*kuhamula lukongolo*), i.e. to surrender to the chief in the area. Also the chief sent out expeditions to capture slaves or he purchased slaves with the cloth and beads he had exchanged for ivory at the East coast.

643 421 Within his territory certain privileges and rights were held by the chief and he had certain religious duties to perform in which the unity of the people in the territory was expressed. In general the chief had rights over any ivory either found or hunted in his territory. If a dead elephant were found the tusks belonged to the chief, though he usually rewarded the finder with cloth. [224] If a man killed an elephant the tusk that lay on the ground belonged to the chief while the other belonged to the killer. [439] The killer's tusk was included in the chief's caravan to the coast and its value paid in cloth to the killer when the caravan returned.

643 651 The chief was also entitled to an annual tribute of food and beer from all villages in his area, but this was used to entertain visitors who came to the court-village.

643 782 The chief's religious duties lay mainly in propitiating the spirits of his ancestors on occasions when the community at large, in contrast to the chief's own private affairs, was either threatened or directly affected. The most obvious occasion was immediately before the rains came when flour was poured on the tree shrine and the spirits of the ancestors asked for good rains. Later when the rains were over a similar sacrifice was made asking for a good harvest. Sacrifices to the ancestors were also made on two other public occasions. They were made when some calamity had occurred or was believed to be impending. A run of unsuccessful campaigns induced Cingwalugwalu, a son of the Yao chief Mponda near Fort Johnston, to ask his father's father's brother to make sacri-

3:Stanzus D-5 (ca. 1912) 1922 FT7 Yao FT7

567 **Slavery.** Slaves were acquired by capture or purchase, or were received as payment. Prisoners taken by the vassals of one chief in a fight with the partisans of another chief became slaves. Slave raids were also made by the Wayao upon the weaker Anyanja or again expeditions were sent out hundreds of miles away into the Chipeta country to buy slaves.

[422] Slaves were a man's goods and chattels, to do with mainly as he pleased, but no man might kill a slave without bringing the case before his chief and obtaining consent. While some were bought and sold and sometimes found their way into a slave caravan bound for the coast, many, perhaps the majority, lived the life of ordinary individuals in the villages. A man who was unhappy in a village and wished to escape from his vassalcom might run away to another village and there commit some act so that he might be claimed as a slave. The custom was to go to the village and sit by the site of a house which had been pulled down after the death of the occupant, and the saying is, "He has been called by the dead man's spirit."

[554] Many a slave has become an important man in the village and slaves were often the trusted advisers of their chiefs, but there was no means of becoming a freeman. Neither a slave himself nor a second party could purchase his freedom. A slave capturing another man in warfare, for instance, could not ask for his own freedom in exchange for his captive, but anyone so taken became, in a way, the slave of a slave, and the master could not sell the second slave without the permission of the slave captor. An old slave might often be allowed to do just as he pleased and to all intents and purposes was a free man, but he was never actually freed. A slave might earn a return for work done for others than his master; part of this he would probably give to his master, but there was no regular tax upon such earnings.

The idea in accumulating slaves seems to have been to increase the population of the villages and hence their power and progeny. This is borne out by the fact that marriage [582] between free men and slaves was allowed. Marriage between a free man and a slave woman was unaccompanied by any ceremony and was therefore rather in the nature of recognised concubinage. Such a wife, if unsatisfactory, could be sold out of the village, but generally she was well treated. The children of two slaves were of course born into slavery; the children of a slave woman by a freeman husband, were not quite emancipated, as the father could not remove the child from the village of the slave mother's master, and in very extreme cases, it might be sold by him.

Women might marry slave husbands and often a master married his daughters to his slave men whom he thought well of. This amounted to a guarantee to the slave that he [421] would never be parted with. A woman with a slave husband could not leave him informally; she could not sell him, inasmuch as women have no property.

423 **Land Ownership.** The ownership of all land was vested in the chief, but he appeared to hold it in surety for all the people over which he ruled. Headmen had no land rights.

4: Stannus D-5 (ca. 1909)1910 FT7 Yao FT7
Moravi FR4

M Y 501 When a number are working they take time from the front man, the rear man steering with his ordinary paddle. The passengers sit in the middle, a chief towards the stern. They never lose sight of land even in crossing the widest part of the lake. Stones are now used occasionally as anchors up the lake; grass houses are made to shelter canoes. The smaller canoes are 2 feet to 2½ feet high, the very large ones used to be 4 and 5 feet high; except on the lower river, where canoes have ends similarly shaped, they are made with a bow more pointed than the stern and having a beak (Fig. 15). There is no ornamentation and no figure heads.

M Y [422] In every lake-shore or river-side village or collection of huts will be found one or more canoes; these belong to some one man, others using them paying a fee. At the launching of a new canoe, beer is made and the women dance, and medicine is made for its safe journey.

SWIMMING.

M 481 Not even all lake-shore natives swim, though most do. The art is learnt in childhood and not taught. They are not very fast swimmers, and I do not think could swim very far. They sometimes dive head first and practise staying under water. They swim rather like a dog, both arms coming a little out of water, but not a trudgeon stroke; arms are kept straight. They sometimes swim on the side, but never use the ordinary breast stroke.

GAMES.

M Y 524 Several games are played resembling the game of *ubwa* introduced from Zanzibar (Mancala); *ubwa* is played on a board in which rows of holes have been cut; beans are used as counters.

Mchombum.—A game found among Anyanja and Machinga; it may be played on a *ubwa* board, but is often played in holes made in the ground with stones. The Angoni game *chipalapala* is played in the same way. At Fort Anderson is a lump of stone in which hollows have been made similar to those made in the ground. It is the only piece of stone-work I know in the country. Children and women play knucklebones (*mdodo.*)

A man tries in one breath to keep saying *ubiri-biri-biri* . . . . while another makes a pile of stones from another pile of ten, taking one at a time, saying, "To take and put it there makes one," etc. Men play at guessing in which hand an object is hidden, or one out of ten men sitting in a house has to guess with whom a certain object is. No forfeits.

Tendande (= the spikler) is cat's cradle.

Tiali (hide and seek), one hiding, five or six seeking.

M Y [177] There are no dice games. Cards were introduced from the coast before the advent of Europeans into the country; the games are various and difficult to follow.

M Y 526 A slip-shod kind of wrestling is practised by Anyanja youths; the Machinga

1: Tew E-4 (no date) 1950 FT7 Yao FT7

Land Tenure

The rules governing land tenure were those which would be expected of a society which suffered from no land shortage. A man was entitled to as much land as he could cultivate, the limitation being that he should consult the headman as to his neighbours' boundaries. Abandoned gardens could only be taken up with the permission of the original cultivator.[1] 423

MAIN CULTURAL FEATURES

Religion

The Yao are largely Islamized. Codrington remarked that the perpetuation of this faith was distinctly antagonistic to British influence, and it received considerable attention from chiefs and headmen. Schools for the instruction of youth in reading and writing Swahili in Arabic characters were established in nearly every village, where also prayers were made at regular intervals in the day. The Moslem fasts and feasts were also observed, and the Yao were not inclined to embrace Christianity.[2] Their conversion to Islam did not take place till the nineteenth century, long after their first introduction to the Arab traders at Kilwa and Zanzibar, although they had adopted Swahili modes of dress much earlier.[3] 771 797

According to Hetherwick, Islam is strongest on the lake shore and on the east border of Nyasaland, chiefly round the old slave-trade centres. Makanjira's on the south-east side of the lake, and Domira Bay on the west, were the centres of Moslem propaganda. The Moslem population around Zomba and Blantyre consists mainly of Yao men, who have built themselves mosques in their own villages, or use the large mosques of Indian Moslem merchants. In the west districts, lower Shire, Ruo, central Shire, Lilongwe, Fort Manning, the Moslem population does not total more than 732. In the districts round Fort Johnston and Kotakota, the Moslems are one-ninth of the total population, while in Zomba district they number one-fifth.[4]

The Yao pagan religion was a form of ancestor worship. Apart from diviners and medicine men, there was no regular priestly profession. Intercession with the ancestors was performed by the chief, on behalf of the chiefdom, by the headman on behalf of the village, and by the head of the matrilineal kin for his dependents.[5] A man was qualified to approach his ancestors individually only if he had been initiated and had a house of his own.[6] 771 769

Some of the ritual duties of the chief have already been mentioned. When his people were visited by drought or epidemic, or when he fixed the day for the beginning of the millet harvest, he made an offering of flour and of beer poured into a pot in the ground at the grave of a dead chief. The village headman made similar offerings to the spirit of his dead predecessor. The spirits of the dead Nyanja chiefs, ousted by the Yao invasion, were regarded as still powerful in the homelands of their people. For instance, Kangomba, whose shrine was on Mount Soche, used to be appealed to for rain, and on the principle that the most appropriate mediator between a dead man and the living is a descendant of the former, the Yao chief, Kapeni, when he wished to propitiate 771 631 622 775 782

[1] Macdonald, 1882, vol. i, pp. 177–9; Stannus, 2, 1923, p. 280.
[2] Codrington, 1898, p. 516; see also Maples, 3, 1893.
[3] Young, T. C., 4, 1932, p. 37.
[4] Hetherwick, 4, 1927, p. 127.
[5] Werner, 1906, p. 270; Stannus, 4, 1922, p. 311.
[6] Macdonald, 1882, vol. i, p. 63.

622 558 837 166 hut of one of Meya's wives. Meya's sister wrote a letter to tell him of this and he replied that he could do nothing until he returned. In 1946, Meya returned to be demobilized. The third night after his return he questioned his wives about their fidelity during his absence. They at first held out against him but before long he intimidated them into admitting that they had slept with the village headman. Meya now went to complain to Mapata, who was Cikumba's perpetual mother's brother, and he said that he would come to the village the next day.

When Mapata came he confronted Cikumba with the accusation. Cikumba denied it until Mapata called the women. When they confessed Cikumba was forced to admit his guilt. Mapata now decided to call in an arbitrator, Isa, an important but unrelated headman who lived close at hand. Isa said he would come the following day when the matter could be thrashed out. When Isa and Mapata came they asked the women about the affair in public. They admitted the charge and Cikumba did not deny it. Isa then remonstrated with him for being a bad man and said that he was ashamed to hear about it. Cikumba had to pay £6 10s. to the injured man, Meya, who, however, refused to take it. He argued that Cikumba ought to have behaved as a father to him. But Cikumba had not. He, Meya, could not remain living in the village because his wives would be as Cikumba's wives. Isa said that he could not object because Cikumba had caused the trouble and had broken the village himself. How could he complain? Meya took two-thirds of the huts in the village away with him.

The Headman as a Representative of a Corporate Group

622 689 The headman is not only responsible for keeping the peace between the members of his village, but he is also supposed to control his members in their relationships with other villages. If members take corporate action against other villages, even if they do so without the consent of the headman, the chief will consider the village headman responsible. This was brought out clearly in the relationships between Cikoja, Mapata and Masimbo in Chiwalo's section.

622 689 423 226 Cikoja and Mapata are two of the more important headmen in Chiwalo's section. Masimbo is a minor village headman who lives in Mapata's village area. The quarrel arose over the question of fishing rights in a small pool lying between the two main villages. This pool was excavated by Cikoja and his villagers in 1924 during

a severe drought, and he claimed the rights over it. One day in 1930, some boys from Mapata village came down to the pool with fish-poison. At about noon some boys from Cikoja's village arrived with their traps. When they saw the Mapata boys using fish-poison they told them to desist and tried to take away the fish. This led to a fight in which knives were drawn. One of Cikoja's boys ran back to tell him, and in anger he came down to the pool with some adults. The Mapata boys now ran back to Masimbo who immediately assembled some men and came to the assistance of the Mapata boys. The two groups joined battle immediately and there were casualties on both sides. Mapata heard about this and came running down to separate them. 622 689 423 226

The next morning they took the dispute to Chiwalo. He started by asking why Mapata had used fish-poison in someone else's pool without permission. Mapata replied that he did not know that his boys had gone down there. He said that Masimbo had told him about the conflict and that he had gone down to stop it. He was not aware of it before. Chiwalo now turned to Masimbo and said, 'Masimbo, you are in the wrong. You have caused the children to suffer. You went to make war because of your children. The people of Mapata, they are in the wrong because they did not report to the owner of the pool.' 622 689 423

When Cikoja was asked if he had anything to say he only replied that he was ashamed of what had happened because he was the first in the area, and until then they had been friends. The conflict had arisen because the children had done something which they did not know was wrong.

Chiwalo ordered Masimbo to pay 5*s*. and Mapata 6*s*. to Cikoja. He then told Cikoja that he should brew some beer and share it with the other two villages so that friendship might be restored and the children might go from village to village without fear. The chief's instructions were carried out and normal amicable relationships were re-established.

The way in which the villages acted as corporate groups is well illustrated by this incident. The responsibility of the village headmen for the activity of their members also emerges. The chief found Masimbo in the wrong for causing the fight, but he also fined Mapata because his boys had used fish-poison. The fines were paid by the village headmen, Masimbo and Mapata, to the village headman Cikoja, for they are the representatives of the corporate groups under them. 622 689

In no other field of village relationships is the corporate 621 423

2: Mitchell E-5 (1946-1949) 1956 FT7 Yao FT7

621 identity of villages more clearly seen than in the arguments that arise over rights over waterholes. These are usually dug next to
423 a stream or a marsh, or in some other place where the water will percolate into them. The physical labour of digging a waterhole establishes the rights to it, and a village retains these rights if at some time in the past any of its members had dug it.

621 In normal years, and of course during the rainy season, there is enough water for all and no friction arises, but in drought
423 years difficulties arise. Friction between Nampeya and Ciku-
685 wita arose in this way in 1933.
622

During the dry season the waterholes that were normally used were drying up and the people of Nampeya decided to open up a disused one. When Cikuwita's people saw Nampeya's people using it they came to use it too. Nampeya's women saw this and told the other people they had no right to use the waterhole. Words passed between them and eventually there was a tussle between the two groups, during which a waterjar of one of Cikuwita's women was broken. Cikuwita's women said they would take the case up to Ntibwilibwi, a headman of local importance, and when they returned to their village they complained to their headman who took the complaint to Ntibwilibwi. He sent a message to Nampeya to arrange a date on which the dispute might be settled. On that day the members of the two villages gathered at Ntibwilibwi's hut. The dispute was settled amicably: the person who broke the waterjar was ordered to take a chicken and give it to the owner of the jar, and Cikuwita was told to gather his people the next day and make them dig a waterhole of their own.

The villagers in each of these situations had acted with regard to their fellows primarily as members of villages. They had seen themselves as members of corporate groups and had interacted as such. In the dispute in which the jar was broken, the individual responsibility was fixed and compensation awarded, but at the same time the village headman was instructed on behalf of his villagers to make a new well and thereby ensure peace in the future. In all these disputes, however, the headman had appeared as the responsible representative of his village.

567 **Slavery.** Slaves were acquired by capture or purchase, or were received as payment. Prisoners taken by the vassals of one chief in a fight with the partisans of another chief became slaves. Slave raids were also made by the Wayao upon the weaker Anyanja or again expeditions were sent out hundreds of miles away into the Chipeta country to buy slaves.

[423] Slaves were a man's goods and chattels, to do with mainly as he pleased, but no man might kill a slave without bringing the case before his chief and obtaining consent. While some were bought and sold and sometimes found their way into a slave caravan bound for the coast, many, perhaps the majority, lived the life of ordinary individuals in the villages. A man who was unhappy in a village and wished to escape from his vassaldom might run away to another village and there commit some act so that he might be claimed as a slave. The custom was to go to the village and sit by the site of a house which had been pulled down after the death of the occupant, and the saying is, "He has been called by the dead man's spirit."

[554] Many a slave has become an important man in the village and slaves were often the trusted advisers of their chiefs. But there was no means of becoming a freeman. Neither a slave himself nor a second party could purchase his freedom. A slave capturing another man in warfare, for instance, could not ask for his own freedom in exchange for his captive, but anyone so taken became, in a way, the slave of a slave, and the master could not sell the second slave without the permission of the slave captor. An old slave might often be allowed to do just as he pleased and to all intents and purposes was a free man, but he was never actually freed. A slave might earn a return for work done for others than his master; part of this he would probably give to his master, but there was no regular tax upon such earnings.

The idea in accumulating slaves seems to have been to increase the population of the villages and hence their power and prosperity. This is borne out by the fact that marriage [582] between free men and slaves was allowed. Marriage between a free man and a slave woman was unaccompanied by any ceremony and was therefore rather in the nature of recognised concubinage. Such a wife, if unsatisfactory, could be sold out of the village, but generally she was well treated. The children of two slaves were of course born into slavery; the children of a slave woman by a freeman husband, were not quite emancipated, as the father could not remove the child from the village of the slave mother's master, and in very extreme cases, it might be sold by him.

Women might marry slave husbands and often a master married his daughters to his slave men whom he thought well of. This amounted to a guarantee to the slave that he [421] would never be parted with. A woman with a slave husband could not leave him informally; she could not sell him, inasmuch as women have no property.

Land Ownership. The ownership of all land was vested in the chief, but he appeared to hold it in surety for all the people over which he ruled. Headmen had no land rights.

GB 423

There has never been any shortage of land and therefore the plotting out of gardens was a matter which caused little trouble. A man wishing to make a new garden the next season simply marked the site in the bush by scoring some trees or hoeing around some patches of grass and tying the grass ends into a knot. If anyone else came along and hoed this plot, the man who had marked it out still claimed it and need not pay for the hoeing done. Whenever a man was doubtful about a piece of land, he would ask advice of the headman of the village. 423

When an abandoned garden had become overgrown, anyone wishing to take it up applied to the headman who sent him to ask the original owners whether they wished to take it up again. The newcomer could take possession only with their permission. 361

Often if a village were moved during the first season the people simply put up shelters in their gardens. Later, the site of the village was chosen and around it a medicine man sprinkled medicine to insure happiness and prosperity. The tree from which this medicine was made became sacred to the village and might not be used for firewood, or was subject to any other taboo the medicine man might care to make. He might also say, "In this village there shall be no pounding of grain at night," etc. 423 [789] [778]

If a village were to be built near a spot previously inhabited, medicine and offerings were made to the departed spirits of the former occupants to put them at rest and "open" the place to the newcomers. The beer-pot from the grave of some former chief or headman, who was supposed to have directed the destinies of the old village, was brought to the new location and beer placed in it to insure his continued guidance. [769]

In the case of a village into which a number of men had married, the sponsors of the wives went to the sponsors of the husbands and asked permission to move the village.[1] Later, beer was brewed in the new village and the sponsors invited to come and drink and "put foot in the new village." [273]

Relationship. Family relationship among natives presents certain difficulties to the European accustomed to equivalent relationship of males and females on both sides of the family. In the diagram below (Fig. 1) the relationship of the two children (C 5) will be traced. The mother and father (B 10 and 9) are the *achikulu* and *wase* but are addressed as *amao* and *atati*. The maternal uncles older and younger than the mother (B 11 and 15) are called *akwelume* and their wives (B 12 and 16) *akuguse*. The maternal aunts are addressed as *amao*, mother, anyone older than the mother being distinguished as *amao wakulungwe*, "the bigger" (B 13), a younger aunt as *amao wanandi*, "the lesser" (B 17); their respective husbands are addressed *atati*, *atati wakulungwe* (B 14), and *atati wanandi* (B 18). On the father's side the uncles are called *atati wakulungwe* (B 1) and *atati wanandi* (B 5), respectively, for those older and younger than the father, and their wives *amao wakulungwe* (B 2) and *amao wanandi* (B 6). The paternal aunts are called *atati wakungwe* (female uncles) (B 3 and 7), their husbands (B 4 and 8) *atati*. 593 601

[1] Vide supra, p. 268.

4: Stannus D-5 (ca. 1909)1910 FT7 Yao FT7
Marayi FR4
Ngoni FR5

M Y 241 only implement used. Sowing is done after the first rains, about November; the harvest takes place in May to July. Gardens are at varying distances from the villages, depending partly on the soil becoming exhausted M Y [423] after years of cultivation. Boundaries are marked by leaving a line of uncultivated ground, sowing a line of a different crop, N [422] tying knots in the young crops at intervals, ditches, etc. In starting a new garden, woodland is often taken; the trees are cut down, leaving stumps 3 feet high; the undergrowth is cleared away and burnt, the ashes distributed over the land, which is then hoed, really very superficially; the earth is then made up into little heaps with a central hole in each, after the first rains four or five grains of the cereal (maize, millet) are dropped in each and covered with earth; as the young shoots grow the hole is more and more filled in.

FIG. 8.

With the cereal is planted the seed of peas, beans, pumpkins, the former on coming up then grow up the maize stalks. The seed is last year's product and not specially selected.

M Y [343] Depredations among crops made by elephant, hippopotamus, large antelope (eland and kudu), pigs and baboons, vary in extent in different districts. Little [417] grass huts are built, raised above the ground like a pile-dwelling, in which watchers are stationed. Fences, sometimes extending for miles, are built. The gardens of the chief are hoed by his slaves or the people of the village. Maize is collected M Y [251] in the cob, and after the outer coverings have been removed is stored; so is the *ukuhwer*, millet in the head; beans and peas are stored in baskets. Medicine is put on the ground to ensure a good crop, and a piece of stick is sometimes hung up for good luck.

CATTLE, ETC.

N 231 The keeping of cattle is practically restricted to certain tribes living in districts free from tsetse-fly (Angoni, Wankonde); among these people wealth is [422] reckoned by cattle. The milk is little used; the flesh is eaten only when an animal dies. Marks of ownership are made by cutting the ears (*Fig.* 8). Cattle are kept in open kraals by Angoni, in a compartment of their houses by Wankonde; they are tended by the small boys as a rule. Goats and sheep are kept all over the country. Castration of cattle is a recognised practice (*bufula*).

N 281 Angoni make their shields from cattle skins; their spear handles are covered with goat hair (beard); hair anklets and armlets in dancing costume are made from goat hair. Skins are used as dress to a small extent.

HUNTING.

M 224 A man intimates to the community around that he is making a hunt by clothing a boy of about ten years in leaves, who precedes him and the men from his own village through adjacent villages; at each village the lad has to lie down and

2: Mitchell E-5 (1946-1949) 1956 FT7 Yao FT7

crop failures. Also I was told that important village headmen are buried with their heads pointing to the east.

The Yao concept of the past is reflected in the principles of political organization of these Machinga chiefdoms. The invasion is the datum point from which rank mainly stems. We may classify modern headmen into: those who were in the area before the Yao invasion, i.e. the Aborigines; the Invaders; and those who have come in since the invasion and have had to submit themselves to the Machinga chief, i.e. the Newcomers. The principle behind this classification of headmen is fundamental to Yao political structure. Stated most simply it is the rule that MacDonald quoted in describing the development of local organization: 'However large the settlement may become the man that is first in is the chief or headman.'[1] This is, of course, somewhat of a simplification, but the rule contains the essence of the principle. It was reversed for the Aboriginal Nyanja because the Yao subjugated them. But the claims of the Nyanja chiefs to rank because they had occupied the land first were recognized by the Yao who absorbed them into the social structure in positions of high rank.

But the principle holds among the Yao themselves, and for the Nguru in their movements after the White conquest. The operation of the principle is clearest in the structure of small local areas such as Chiwalo's. When Chiwalo's area was first settled, just after World War I, there were large tracts of unoccupied land. The first headmen to move into this region were Cigwaja, Kapaloma, Nyanje, Makata and Mumbwa. The local chief Chiwalo followed Cigwaja, but as Cigwaja was one of the Invader headmen under Chiwalo during the period of invasion, he now recognized Chiwalo as the chief. The area that is now Chiwalo's chiefdom was divided out among these five headmen. As other headmen came into the area they had to approach one of these five for land rights. These, when granted, were granted irrevocably in a block to the new village headman who then had sole rights to distribute the land afterwards. If he had the land to spare, he may have granted a portion of it to yet another village headman, and this action was also irrevocable. The land occupation pattern in any particular area is therefore extremely complex, because in addition to the village garden areas, indivi-

[1] MacDonald, *Africana*, i, 147. See p. 35 above.

2: Mitchell E-5 (1946-1949) 1956 FT7 Yao FT7

duals may hold garden plots in other village areas which they have temporarily borrowed in a private arrangement with the individual owner. But when the system is seen in relation to the pattern of occupation of the area, it is greatly simplified. Each garden may be traced back to the original owner through three or four village headmen. The pattern of the reversion of rights follows the same system. The garden land of a village which has recently moved in and is moving out again reverts directly to the village headman who granted it. If he has moved out it reverts back to the village headman from whom it was in turn acquired.[1] These original landholders form the central points of locally organized areas to-day. For example, in Chiwalo's area there is Chiwalo at the top of the scale, then there are Kapaloma, Cigwaja, Mumbwa, Makata and Nyanje as the most important village headmen, and they take precedence over any of the other village headmen. All the others who have come into the area since then, of whom many are Nguru, rank very much lower.

From the smallest village to the chiefdom as a whole, therefore, there is a series of overlapping areas of organization. In any particular area chosen at random in a chiefdom as large as, say, Kawinga's, there will probably be two or three small villages which recognize the primacy of one of their number. The headman of this village may be called in to arbitrate in disputes over land or personal quarrels or even in the private consultations held after the death of a village member (*mapeto*). But the superior headman in turn recognizes *his* superior who was in the area before him. This system is extended over larger and larger areas, each headman in turn recognizing some other headman who was in the area before him, until ultimately the primacy of the Invader chief over all his headmen is established by the same principle. There is no clear-cut district organization as among the Zulu and Bemba.[2]

[1] See also 'Preliminary Notes on Land Tenure and Agriculture among the Machinga Yao', *Human Problems*, x (1950), 1–13. This system of land-holding has been called 'estates of holding' by Gluckman. See his *Essays on Lozi Land and Royal Property*, Rhodes-Livingstone Paper, No. 10 (Livingstone, 1943), p. 29 ff.

[2] See the essays by Gluckman and Richards in Fortes, M., and Evans-Pritchard, E. E., *African Political Systems*, Oxford University Press for the International African Institute (London, 1940).

2: Mitchell E-5 (1946-1949) 1956 FT7 Yao FT7

came to the village and in accommodating strangers while he was away. He told them that disputes were to be referred to the headman immediately. Turning to the new headman he said he had to report anything unusual that occurred in the village, and that he was authorized to arbitrate in small cases in his and surrounding villages. 622 537

Kawinga then left the centre of the crowd and went back to where he had been sitting. Then an officiating headman, addressing particularly the women, said, 'Only a few months ago there was a quarrel between the present chief and his elder sisters. These women ran away to Malemia's area in Zomba district without reporting the matter to anyone. This must stop. With effect from to-day any troubles must be brought to the headman without delay: he will settle them. A tree cannot grow without branches and a headman or a chief cannot be known without his people's respect. Do not behave as children. This man cannot do things alone: he must have your help. We leave him in your hands and we do not want to hear about any more trouble. Follow all the instructions the chief has given you.' He took his leave and Nyenje was taken back inside the hut. The people now dispersed to where there was beer and dancing.

The Structural Reincarnation of Village Headmen and Perpetual Relationships

There appear to be a number of significant aspects of the installation ceremonies. First, there is the ritual death and rebirth of the village headman. The heir is 'killed' by a blow with the fist on the forehead, but is reborn the headman. The Yao do not believe that the spirit of the headman is inherited by the heir;[1] he has only eaten the name.[2] But socially he is born again and, logically consistent with this idea, he takes the wives of his predecessor without further marriage negotiation. He also takes over the property of the dead man, his clothes and his huts. 622 829 [587 428]

But this structural reincarnation of the headman has the important implication that the headman is immortal. He shares this characteristic with the group of which he is the leader. When 622 829 601

[1] As the Bemba do. A. I. Richards, 'Mother-right among the Central Bantu' in E. E. Evans-Pritchard and others, *Essays Presented to C. G. Seligman*, Kegan Paul (London, 1933).

[2] *Kulya lina* is a synonym for succeeding to headmanship.

2: Mitchell E-5 (1946-1949) 1956 FT7 Yao FT7

562 601 'sisters' and 'mothers' because alternate generations are merged in kinship terminology and in behaviour. A man's sister's daughter, for example, is called 'mother', and her daughter (his granddaughter) in turn becomes 'sister'. A woman calls her male matrilineal descendants 'children' (*muanangu*), or 'grandchildren' (*yisikulu*); her matrilineal male progenitors 'mother's brother' (*akwelume*), or 'brother' (*alumbwangu*).[1] By extension, therefore, another way of expressing common matrilineal descent is to say that two people are the children of one person, *ubanakajumo*, even though that person may be their great-grandmother. A term which is almost synonymous with this is *mucitumbu cimo*, 'in one womb', used as 'we were conceived in one womb', though once again the reference may be to a common grandmother. But the inclusiveness of these terms varies in different contexts. Any may refer to the matrilineage of maximal span within the village, or to a section of the matrilineage seen as a segmented organization of parts. It is only by reference to the particular ancestress that the range of the term may be determined.

The Unity of the Matrilineage

613 A person identifies himself most closely with the members of his matrilineage from whom he expects most help and whom he, in turn, is expected to help. If he is called upon to pay a heavy fine it will be the members of his own matrilineage who will club together to find sufficient money. They, more than others, [753] support him in his quarrels. They come to his aid when he is ill or injured, by consulting the diviner and trying to find the sorcerer who is causing his illness, and by finding medicines which will bring him back to good health. They send him money if he has left the country and needs it to return. The goods he brings home from the labour centres will be shared mostly [764] among his matrilineal relatives. They will find the food to be used at his funeral and also see that his burial is properly carried [438] out. He owes these duties in turn to them. His property will stay almost entirely within the matrilineage after his death.

613 763 Relationship, unless qualified, is looked upon as being entirely matrilineal. This is well illustrated by the beliefs about the

[1] She most commonly addresses them as *acimwemi*. See p. 147.

3:Stanaus D-5 (ca. 1912) 1922 FT7 Yao FT7

generous and popular, the donations may mount up to a useful sum. Dancing goes on late 843
into the afternoon when all return to the village.

The man may not speak to his guardian again until after the birth of the child. The two women guardians, the *nkumwal* and the *nabanga*, as a rule cease sexual intercourse with their husbands during the same period or, at all events, during the last month before the birth of the child.

The child born of a woman who has not gone through *Lóiwe* is buried alive. [847]

Chieftainship. The Yao when they migrated to their present country were headed by a number of their chiefs. These eventually settled in different areas adjacent to one another, 622
each ruling over a considerable tract of country. The chief was supported by a number 643
of headmen, each of whom looked after a village; the chiefs and headmen in turn being assisted by the village elders.

Often among a chief's counselors one found a number of his relatives, and sons and 643
brothers were often made headmen. A man assuming chieftainship often had to dispose of a brother of whom he was afraid.

Chieftainship is hereditary, the chief's name being passed on to each successor. Succession is to eldest son of the eldest sister or a son of some other sister. Failing these, it passes to a grand-nephew. If there is no acceptable adult nephew, a full brother may succeed.

Mackenzie's account of the Malenya's succession[1] is, I believe, incorrect. The old [114]
Malenya (Nalutumbo) was succeeded according to custom by his nephew, Kambola who, as Malenya, was called Ndalama. Kumtaja was not a younger brother of Nalutumbo or Kambola, but a cousin of the latter. Ndalama was succeeded by a nephew, not the eldest but the second son of a sister, the eldest having already succeeded to the chieftainship of Kumtaja was therefore ineligible. The present Malenya will be succeeded by a grand-nephew, the son of a daughter of his eldest sister, his sister having no sons.

A successor inherited all the wives and slaves of the deceased chief and all his goods 643
and chattels, guns, ivory and gardens. Any small possessions might be divided among the 428
deceased's children and in the case of guns, those who had always used them often laid claims not to be separated from their weapons; these claims were often allowed by the new chief.

In the same way, any ordinary man's successor is his nephew, the son of a sister, who inherits all goods and chattels and slave wives, but not free-born wives, nor gardens, which go to the free wives. Stock is generally divided among the children.

Before 1891, when a British Protectorate was formally declared over Nyasaland, each 643
chief ruled supreme. He was consulted as to the dates for *Unyago*; he directed the harvesting, etc.; he proclaimed war and generally was paramount among his people. It will be seen, therefore, that he was a busy man, but he received no direct remuneration. His [554]
wealth consisted of slaves and ivory. Slaves he obtained in warfare and as blood money,

[1] Op. cit., vol. I, p. 186.

11:Sanderson D-5 (ca. 1920) 1920 FT7 Yao FT7

601 In Table II, the relationships mentioned in Column 1 are defined in Columns 2-8.

Thus a brother (of (*a*)) is, *inter alia*, the son of (*a*)'s father's brother (Column 3), the husband of the daughter of (*a*)'s father's sister (Column 4), and so on (see Table II).

Before the tables can be fully intelligible, however, a brief explanation of terms having no English equivalent is necessary :—

(*a*) *Akwepo* and *Akowa* are terms exclusively given to relations by marriage.

Akowa is a brother or sister by marriage—it is not advisable to use the terms "brother-in-law" or "sister-in-law" as they are too circumscribed.

Akwepo has not even an approximate equivalent in English owing to the diversity of relationships included (*e.g.*, wife's mother and great-grand-daughter's husband).

Meidani is a special term given to the children of a paternal aunt or maternal uncle, to distinguish them from those of a paternal uncle or maternal aunt.

[582] *Meidani* are not only allowed to marry but are encouraged to do so.

Akwiwana is used only for a maternal uncle, and *chipwa* is the reciprocative term for a sister's son.

The use of inverted commas with English terms (*e.g.*, "brother") indicates that the person is regarded by the Yao as being of the same relation to him as the term usually signifies in English. Thus a Yao regards the son of his maternal aunt, for instance, as being exactly the same relation as his own brother (by the same parents); this relationship is indicated as "brother."

601 *Succession.* The common rule of discriminating between the children of a brother and sister and those of two brothers or of two sisters is present here, and is combined with the equally common one of succession to the sister's son.

The rule of succession is, strictly speaking, to the eldest son of the eldest sister. If, however, a man and his advisers consider him to be unsuitable, or in event of his death, the succession passes to the following in order of precedence : younger son of the eldest sister, younger son of a younger sister, and son of own daughter.

Only by general consent can the succession pass elsewhere, but it not infrequently happens that intrigue procures the death of all the legal heirs of a wealthy or powerful man. In such cases, but only by general consent, the succession may pass to a brother (by the same mother), any "son," or even to a powerful vassal ; it is often felt that a wealthy or influential man is likely to conduce to the peace and welfare of the country rather as the chief, than as a probably turbulent vassal of a man whose succession is apt to be controversial. On the death of such a man, however, matters are often in a state of chaos owing to the multitude of claimants, the members of the two families ; I have known two such cases. A man, also, who

[TEXT CONTINUES ON Page 374--ANALYST]

11:Sanderson D-5 (ca. 1920) 1920 FT7 Yao FT7

601 602 knows that he is not legally justified in "entering into the name" is loath to do so, as he knows that he is not expected to make a successful chief. The defeat of Salimu, the fifth Makanjila, by the British in 1893 was, and still is, ascribed to the fact that he belonged to the male line.

The term *chipwa* (*mwipwagwao*, "his *chipwa*") may be used for any child of a sister. A female title (common amongst the Yaos) descends to the eldest daughter of the eldest son of the bearer of the title.

589 601 *Marriage.*—Relatives who are forbidden to marry are called *achidawako*; they include all those given in the table except *asidani*, *achiwesukulu* ("grandchildren"), and the wife of the maternal uncle. An heir, on succeeding, may marry the wife or wives of his maternal uncle, but not if he has previously married one of his daughters. 589

It is legal, though rare, for a man to marry the daughter of his own child (*chiwukulu*).

619 601 "*Brothers*" *and* "*Sisters.*"—The term *ulongo* is used to describe an exogamous clan, and the members are known as *mlongo* (singular)—*achalongo* or *wa chilongo*, collectively. This word *mlongo* is probably a corruption of *wa ulongo* ("in the clan") as it requires the use of the term *mjakwe* (*ajao*) "a companion," instead of the possessive pronoun. Thus *mlongo mjakwe* (*achilongo ajao*), "his (their) clan relatives" (instead of *mlongo jwakwe*, *achalongo wao*).

601 There is no general term corresponding to the English "brother." The nearest is *alumbu*, which describes the relationship between a "brother" and a "sister," it is rarely used by women, however.

The elder "brother" of a man is called *akulu* or *achinwene*. These terms are used for all sons of a father's elder "brother" or of a mother's elder "sister," and for the elder brother by the same parents. They are also used by a woman for any "brothers," older or younger, senior or junior, in preference to the term *alumbu*.

Mpwanga is used for a son of a father's younger "brother" or of a mother's younger "sister," and for a younger brother by the same parents. It is used by a woman for her "sisters" in exactly the same way, but is never used by a woman of a man.

A man calls his "sister" *chewali*, collectively, *mwanjawa chewali*; a girl refers to an elder, or senior "sister," by means of the same term; a man refers to a "sister" as *alumbwangu* or as *chewali*.

The term *chiwukulu* is used for a "grandchild" (*mwiwukuluwangu*, "my 'grandchild'").

"*Father*" *and* "*Mother.*"—A paternal aunt is distinguished as *atati wakongwao* ("female father") if necessary, though she is, of course, not addressed as such. The elder brother of a father is referred to as *atati wakulungwao* ("the great father"), his younger brother as *atati wanandi* ("the little father"). Other *achatati* are similarly distinguished.

11:Sanderson D-5 (ca. 1920) 1920 FT7 Yao FT7

408 It is becoming increasingly evident, however, that the law of succession is being avoided, not by extension of the number of marriageable relatives, but by laxity in the observance of the law itself. Nowadays the legal heir is never quite sure of his position, though, as a matter of fact, there is not now much competition for a position which, under European rule, is often exacting and yet unprofitable.

581 Moreover, owing to the abrogation of the drastic native laws regulating the sanctity of the marriage tie, marriages are becoming increasingly temporary in character. This is reflected in the system of relationship, as the relatives by marriage are becoming equally temporary.

1: Tew E-4 (no date) 1950 FT7 Yao FT7

expressed also in the speeches by the marriage sureties. The couple are exhorted to refer disputes to the sureties, and to consult the diviner in case of sickness.[1] After the rite these two sureties have special responsibilities towards the couple; grievances are referred to them, and they must be present when adultery cases are heard in court. If the marriage witness ceremony has not been performed, the relationship is not regarded as legal and no adultery compensation can be claimed by the husband. 585

Divorce used to be a private affair, which was merely signalized by one party giving to the other an arrow as a token of separation.[2] Nowadays all divorce cases go to court. The woman is usually asked to choose between her husband and the adulterer, and the compensation paid to the former, if she decides to leave him, is higher—amounting to about 10*s*. A man can be sent away from the village by his wife's kin, but if he has given no grounds for divorce he can claim compensation and will also take back any gifts made to his wife. A few small gifts to his mother-in-law are not reclaimed. Divorces are easily obtained and frequent. Grounds for the divorce of a man may include failure to pay hut tax, one of the specific duties of the husband. 586 [431]

The custom of making a marriage payment is recorded by Johnson[3] (on the east coast of Lake Nyasa) as a relatively new adoption. When given it is divided between the bride's father, mother, and mother's brother and brother.[4] 583 177

Slavery

Domestic slavery was an important institution in the Yao social system. Slaves were obtained by capture, purchase, or in compensation for injury.[5] A man would pay a debt by giving slaves (wives or members of his matrilineal kin group) to his creditors.[6] A man might voluntarily enslave himself to a man having charge of many women, as a means of obtaining a wife.[7] The children of a free man and a slave woman were not emancipated, as their father could not take them from the village of their mother's master, who had the right to sell them.[8] Slaves took part in the ordinary life of the village; women slaves ranked as junior wives of their masters and shared the usual work of women. Men might be supplied with guns for hunting or might accompany their masters to war, trade for them, spin, weave, sew, make baskets.[9] The institution of domestic slavery was an expression of a dominant motif in Yao culture—the association of status with a large number of dependents. Its abolition by the British was in itself a major blow to the prestige and authority of the chiefs. 567 [554]

Information about the social organization of the Yao in Portuguese East Africa is scanty, but it is in agreement with what is known of the Nyasaland Yao; Heckel, who knew the Yao in Lindi district, Tanganyika Territory, confirms the correctness of Stannus's account of the South Nyasa Yao. 184 602

The Yao came into Nyasaland in small parties of kinsmen. Their experience and their superior weapons soon enabled them to dominate the Nyanja among whom they settled, and today they dominate the population of the Southern Province. They are organized into loose groups of villages, under petty, independent chiefs. They seem 175 [621] [631]

[1] Stannus, 4, 1922, p. 245; Hynde, 1895; Johnson, 5, 1922, pp. 69–73; Macdonald, 1882, vol. i; Werner, 1906, pp. 129–32.
[2] 1922, pp. 72–3.
[3] Stannus, 4, 1922, p. 280.
[4] Stannus, 4, 1922, p. 280.
[5] Werner, 1906, pp. 152–3; Stannus, 4, 1922, p. 237.
[6] Stigand, 1909, p. 122 (not a reliable source).
[7] Macdonald, 1882, vol. i, pp. 166–7.
[8] Ibid.
[9] Werner, 1906, p. 273.

1: Tew E-4 (no date) 1950 FT7 Yao FT7

cipete yearly in the great initiation festival for boys and girls. Consequently as they repeat each year the lessons of their own initiation, the ceremonies are the main vehicle of Yao culture.[1]

There are also two Moslem ceremonies:

(1) *Jandu*, the boys' Moslem baptism, which takes about seven days, and is usually worked in with *lupanda*:

(2) *Nsondo*, the girls' Moslem baptism, which is the same as *jandu*,

but usually quite separate from *ciputu*. It is important that the wife of a Moslem should have her *nsondo* so that she knows how to prepare the food properly at Ramadan.

Menstrual and Other Taboos

Menstruation is held to be dangerous. A special mat is used by the woman during this time, and is rolled up and kept during the rest of the cycle. The hut is completely replastered after menstruation. Intercourse during menses leads to disease of the man. Sexual contact is dangerous to persons at certain other periods: during initiation ceremonies, during mourning, and for babies who have not been through the protective rite. The danger is thought to lie in *ndaka*, a dread disease characterized by swelling. This may be transmitted by salt in the food. Deaths are often attributed to 'salt'. Much of the significance of the mourning is that medicines are prepared which protect the mourners against the dangers attendant on sexual activity.

Burial Rites

News of a death must be sent to the chief by a messenger carrying a single fowl. The chief gives a present of calico for wrapping the body, and a goat for the burial men. These are called *awilo*, neighbours unrelated to the dead, who volunteer for certain duties. They prepare the body for burial and carry it in procession to the graveyard outside the village. No uninitiated person is allowed to see the funeral. All who attend the burial are prohibited from sexual intercourse for one month. After this time the prohibition is lifted by a ceremony of beer drinking and feasting, and on the following day all fires in the village are extinguished, and then relit, and the mourners are shaved. A year later beer is brewed for a final ceremony.

For a period after her husband's death a widow is unclean, and has to be purified by ritual intercourse with a man who is paid. The widow is not allowed to remarry for two or three years. A widower leaves his wife's village, after receiving a parting gift. The widows of ordinary persons are not inherited. If a man has himself a 'name' (rank and social position), he has an heir, who inherits also the wives of his predecessor. But if the heir (the maternal nephew) has married a cross-cousin (mother's brother's daughter) he would not consider the wife's mother as his inherited wife.

Before the burial the dead man's hut used to be destroyed, together with his possessions. Immediately afterwards a consultation is held as to whether retaliatory action against sorcerers is called for. The *awilo*'s duties include not only the conducting of the burial, but also the subsequent inquiry and the conduct of the second ceremony, the beer drinking, at which they shave the mourners. A man who has

[1] Main sources for girls' initiation: Heckel, 1933, p. 19; Stannus, 1, 1910, pp. 184–7; 4, 1922, pp. 269–74; Stannus and Davey, 1913; Duff, 1903, pp. 312–15; Abdullah, 1919, pp. 16–17; Macdonald, 1882, vol. i, pp. 125–30; Werner, 1906, pp. 126–7; Johnston, 1897, p. 410.

2: Mitchell E-5 (1946-1949) 1956 FT7 Yao FT7

villages, however, the headman's activities may be as circumscribed by ritual prohibitions as the chief's are. 622 554

The village headman is subject not only to mystical dangers but also to other dangers deriving from his position of authority. It is significant that villagers never go to a diviner to find out the cause of a village headman's death. When I asked informants why this was so, they said, 'Well, what's the use of it? He has enemies on all sides in the village who are trying to kill him with their magic.' In harmony with this view of village headmanship, the symbolic object which represents the village headman in the diviners' gourds I have seen, is a small ring of grass (*singwa*), a copy of the grass cushion women place on their heads when they are carrying loads. This symbolizes the ring of enemies which surrounds the village headman. The saying 'the tortoise defecates on the one who carries it',[1] usually applied to chieftainship, applies equally well to a village headman. 622 787 578 482

A village headman may expect little material benefit from his position of authority. If he is an Administrative village headman he may be paid a small annuity of 5*s*. or 10*s*.[2] Returning labour migrants may give him a blanket or a military overcoat, or perhaps a few shillings, but this is not usual. If he is not a strict Moslem he will almost certainly be given a pot of beer from every brewing made for sale in the local 'club house'. On the other hand, if an important stranger, particularly a White official, arrives in the village he feels he must give his guest a chicken. It is mannerly to reciprocate with another gift, but not all Whites know this, or, if they do, do not observe it. In particular if the chief comes to his village, he will be expected to entertain him and here can expect no recompense—the chief 'eats from his country'. 622 651 431

The Yao know that the position of headman is no sinecure. Frequently the one chosen to succeed refuses to accept the position, especially if he is well placed in employment. It is significant that the word for an heir is *litegwa*[3]—the one who is trapped. An 622 554

[1] *Ngonjo jikunyela usyene iwajigele.*

[2] Until recently this was true. As I was leaving the field in 1949, I heard that the Administration had decided to abandon this system in favour of one in which only group headmen would be remunerated.

[3] Substantive form of the passive of the verb *kutega*—to set a trap as for animals. This word is not widely known, especially among the younger Yao.

765 might not break up for a week, but the practice was often modified to some degree, people returning to their homes during the day and coming back each night to sleep in the deceased's village. At the present time, there is a tendency to cut the proceedings short, and the mourners generally disperse on the second day after the funeral. This period of waiting is usually whiled away by playing and singing *chindimba*.

768 On the day before the company leaves the village — now, often on the day after the
765 funeral — the ceremony of shaving the head takes place. The *awilo*, assisted in the case of a large party, by those who helped at the burial, shave the heads of all the dead man's relatives. When this is completed, they begin to tear down the deceased's house. The grass from the roof, with the hair removed from the heads of the relatives, is carried to the cross-roads and burned. The walls of earth are torn down and made into a heap; on the top, a stick is raised, and at its base is placed the dead man's snuff box. Sometimes a cactus euphorbia, *ngachi*, is planted on the mound and cassava round about. The snuff box is kept replenished with snuff. This, with the cassava, is reserved for the *awilo;* no one else may partake of them.

While the house is being pulled down, the chief *mbilo* ties around the neck of the widow a single string of beads or a small piece of calico, *ng'onji*. After the house has been demolished, the *awilo* return to their homes and on the following morning, everyone else departs.

767 The position of *mbilo* is a strange one. Every man in the course of his life probably acts as undertaker for some friend; many have probably performed the service several times. He receives no regular payment, but beads, and, nowadays, coins are often thrown into the pot of water with which he wets the heads of those he shaves after the funeral, and he has the freedom of the village in which he has so acted forever afterward, the degree of freedom being determined by the distance which he has travelled to officiate. When Wandalama died, a headman named Chisui from Makanjila's on Lake Nyasa, over a hundred miles away, acted as one of the *awilo*. The occasions on which he revisited Malemya's village are
[431] well remembered, as they were marked by much frolicking and some obscenity. He was the recipient of enormous presents of fowls, sheep, and anything else he cared to take, and having commandeered men from the village to carry these gifts for him, he would leave, accompanied by all the people, yelling and shouting their joy at seeing him again.

Any fowls or other provisions that friends may present to the deceased's relatives at the time of the funeral to help defray expenses are given to the *awilo;* no one else may eat them. Some may be kept against the next death in the family.

A few days after the funeral, recourse is had to the chief to settle whether any action
768 must be taken in regard to the cause of the death. Some near relative of the dead man will
622 be chosen for this purpose; he must not be shaved by the *awilo* at the time of the funeral. The consultation takes place at some secluded spot outside the village. The chief always brings some one with him to witness what is said. On arriving at the appointed place, the chief salutes the unshaven mourner who is probably accompanied by other relatives, and

3: Stanzas D-5 (ca. 1912) 1922 FT7 Yao FT7

843 538 when in child-birth there is delay in delivery it is said of the woman "*Ahalehee*," "she is stuck," from *ha-halehee* "to be suspended, to be caught by a thorn"; *wajeja*, well dressed, is a slang exclamation meaning "everything, everything is out!" The verse refers, of course, as all obstetricians will recognize, to the moment of crowning of the oncoming head during parturition when it appears to be stuck; then suddenly it slips over the perineum and "everything, everything is out."

843 533 The *nahanga* now gives way to the songs of the other women. In different districts different versions of the songs are sung, but the other women will quickly pick up the refrain of the song sung by a woman who has come in from some distance.

843 After these songs, the *nahanga* instructs the woman and her husband in the care they must take until after the child is born. Macdonald says, speaking of the instructions "but of the quality, we prefer to be silent."[1] What a pity he allows no one else to judge!

The woman is especially cautioned against sitting with her legs crossed; they must be kept apart lest the child in her womb be suffocated. She is also told many useful things concerning her pregnancy and confinement. The husband is cautioned to cease intercourse with his wife or if he has intercourse, his wife may not lie on her back, lest the child be injured.

While this instruction is going on, all the assembled women cook and eat the feast [751] which has been made for them. When all has been said, the *nahanga* anoints the man with castor oil, which has in the meantime been warmed, and ties round the neck of the woman the *litiwe*, a cord made of plaited bark-cloth with a tassel in front; at the base of the tassel white beads are strung for good luck, and at the end of the tassel, red beads are affixed, having symbolic reference to the haemorrhage at the time of childbirth. The woman wears only a strip of calico of two hands breadth called *nlatu*. She is anointed on the head, body, and limbs.

The tying of the *litiwe* is the sign for dancing to begin. It is a dance in which women try to excel one another. They come with all their tattoo marks on buttocks, thighs, and abdomen renovated; they wear diaper-fashion a narrow strip of cloth, always black in color, and round their bodies numerous strings of beads. With the beginning of the dancing, their other clothes are thrown off and practically naked, they vie with one other in exhibiting their charms and skill in dancing, which afterwards becomes the subject of much discussion among the women onlookers. "So and so is really too old and skinny for such exhibition," and "So and so has buttocks as flat as a wall," while "Such and such a one is fat and beautiful and dances wonderfully, with such *abundos*," etc. In front of the woman [431] is set a wooden plate, in front of the man a mat, and on these are thrown donations by the dancers and onlookers, consisting of beads etc., or nowadays pennies and small silver coins to help to pay the expenses of the entertainment and, in the woman's case, to buy medicine which may be necessary should the baby fall ill. When the wedded couple are

[1] *Africana*, op. cit., vol. 1, p. 129.

2: Mitchell E-5 (1946-1949) 1956 FT7 Yao FT7

APPENDIX A

ECONOMIC DATA

AMOUNT AND VALUE OF TOBACCO BOUGHT IN JALASI–KAWINGA AREAS 1942–49

249
433
435

Year	Growers	Amount in lbs.	Cash Value £	Av. Price per Grower (pence per lb.)	Lbs. per Grower	Cash per Grower £ s. d.
1941/2 .	1055	393,964	6695	4·08	373	6 6 9
1942/3 .	2106	465,477	7044	3·02	221	4 0 0
1943/4 .	1792	464,929	8025	4·15	259	4 8 5
1944/5 .	1246	269,212	3067	2·84	216	2 9 3
1945/6 .	1074	127,237	6471	12·41	119	6 0 6
1946/7 .	918	116,590	4020	8·28	127	4 7 5
1947/8 .	1570	132,832	5035	9·18	85	3 4 3
1948/9 .	1315	171,865	5206	9·60	130	4 0 0

AGRICULTURAL PRODUCE BOUGHT IN KAWINGA–JALASI AREAS AT NAMWERA, LIWONDE, MLOMBA, NTAJA, NYAMBI, AND MASUKU MARKETS. AVERAGE FOR THE YEARS 1945–47 INCLUSIVE

241
433
435

(in 1000 lb.)

Year	Maize	Groundnuts	Rice	Beans
1945	23·6	1395	94·0	31·0
1946	101·4	1268	60·4	34·6
1947	nil	1465	122·8	2·8
Total	125·0	4128	277·2	68·4
Average	41·6	1376·1	92·4	22·8

LIVESTOCK CENSUS IN KAWINGA–JALASI AREAS, 1947
(Jalasi, Kawinga, Liwonde and Nyambi, and Malemia areas)

231

Goats	Sheep	Pigs	Cattle
4319	2498	4	225*

* Most of these are owned by White settlers.

2: Mitchell E-5 (1946-1949) 1956 FT7 Yao FT7

436 calico currency was an impossibility.'[1] The Africans could hardly have resisted the change over to a money economy. The taxation system introduced in 1893 was based on the Governor of
436 Zululand's Proclamation III of 1887, and ruled that a tax defaulter
651 was liable to be conscripted for labour until he had earned the
687 amount of his tax. Coffee estates owned by Whites in the Highlands were at the same time in need of labour.[2] Tax was then taken in kind but it was soon changed to cash as a further inducement to Africans to come on to the labour market. The Africans were forced into the cash economy of the Protectorate even if they were unwilling. The measures were so successful that in 1899 the *Gazette* announced that the labour market in Blantyre was flooded.[3]

Modern Economic Structure

177 In modern Nyasaland, the wants of the Africans have become even more varied than they were in the earlier days. Most younger
511 men wear European-type clothing and shoes. Many own bicycles and sewing machines. Many houses have glass windows and panelled doors and most of them are furnished with some rough furniture which has been bought from local craftsmen. Many have beds and mosquito nets. Few women cannot boast of enamel dishes to replace their clay pottery or china cups to replace drinking gourds. The food habits of the peoples too have broadened. Most households use sugar these days, and many people drink tea. I should say that all households occasionally buy soap. Certainly all need salt, which formerly was burnt from the saline grass around Lake Shirwa or dissolved out of special soils in Portuguese East Africa. The stock-lists of an Indian-owned village shop in Chiwalo's area and of an African-owned canteen in the same area, which I have set out in Appendix A, indicate the range of the wants of the modern African.
434 It is clear that these wants are over and above food require-
463 ments. The people in these tribal areas live primarily on the

[1] *Report of the Consul and Acting Commissioner Sharpe on the Trade and General Condition of the British Central African Protectorate for April 1896 to March 1897.* C. 8438.

[2] See the *B.C.A. Gazette*, iii, 5 (March 1895), and iii, 17 (Sept. 15th, 1896), which print advertisements offering 'native labour arranged for and supplied to plantations at a commission of 7*s.* 6*d.* a head'.

[3] *B.C.A. Gazette*, vi, 6 (June 24th, 1899).

2: Mitchell E-5 (1946-1949) 1956 FT7 Yao FT7

crops grown in their gardens. For their other wants they need cash, and they obtain it either by the sale of their agricultural produce, by trading with their fellows, or by seeking work either within or outside the area. The sale of agricultural produce is probably the most important. A few Africans earn a small living as blacksmiths, bicycle repairers, diviners and leeches, fish pedlars and tailors. There are some African canteen or small shop owners, but this field is dominated by the Indians, who between them have a few dozen village and roadside stores.

A certain amount of money is sent or brought home by labour migrants. I could not estimate how much this is for each household. It cannot be very high on the average, because not a great proportion is working at labour centres outside the area of study.[1] Within the Territory there are few opportunities of earning wages. In Jalasi's area there are one or two White tobacco estates, which employ at the most a few hundred labourers, and a number of Indian storekeepers who may between them employ a hundred men. Otherwise the Government itself, through the Agriculture Department in particular, may employ a hundred or more labourers. There are more opportunities south of Chikala and in the densely populated Malemia area where a considerable number are employed in the neighbouring township, Zomba, and on the surrounding estates. The cash income per adult, male and female, in the area where this study was made probably does not exceed £40 to £50 per annum, and the Yao rely mainly on the sale of their own produce to earn this amount.

[1] I estimate from genealogies that about 22 per cent of the men over the age of 18 were at labour centres in 1947–8. Table 3 of the 1945 Census shows that, excluding those in the Army, 28 per cent of the men over the age of 18 were away from Liwonde and Fort Johnston districts when the census was taken.

2: Mitchell E-5 (1946-1949) 1956 FT7 Yao FT7

APPENDIX A

ECONOMIC DATA

AMOUNT AND VALUE OF TOBACCO BOUGHT IN JALASI-KAWINGA AREAS 1943-49

249
433
435

Year	Growers	Amount in lbs.	Cash Value £	Av. Price per Grower (pence per lb.)	Lbs. per Grower	Cash per Grower £ s. d.
1942/2 .	1053	393,964	6695	4·08	373	6 6 9
1942/3 .	2106	465,477	7044	3·02	221	4 0 0
1943/4 .	1792	464,029	8125	4·15	259	4 8 5
1944/5 .	1246	269,212	3067	2·84	216	2 9 3
1945/6 .	1074	127,237	6471	12·41	119	6 0 6
1946/7 .	918	116,590	4020	8·28	127	4 7 5
1947/8 .	1370	132,832	5033	9·18	85	3 4 3
1948/9 .	1323	171,865	5206	9·60	130	4 0 0

AGRICULTURAL PRODUCE BOUGHT IN KAWINGA-JALASI AREAS AT NAMWERA, LIWONDE, MLOMBA, NTAJA, NYAMBI, AND MASUKU MARKETS. AVERAGE FOR THE YEARS 1945-47 INCLUSIVE

(in 1000 lb.)

241
433
435

Year	Maize	Groundnuts	Rice	Beans
1945	23·6	1395	94·0	31·0
1946	101·4	1268	60·4	34·6
1947	nil	1465	122·8	2·8
Total	125·0	4128	277·2	68·4
Average . . .	41·6	1376·1	92·4	22·8

LIVESTOCK CENSUS IN KAWINGA-JALASI AREAS, 1947

(Jalasi, Kawinga, Liwonde and Nyambi, and Malomia areas)

231

Goats	Sheep	Pigs	Cattle
4319	2498	4	225*

* Most of these are owned by White settlers.

2: Mitchell E-5 (1946-1949) 1956 FT7 Yao FT7

STOCK SOLD AT AN INDIAN-OWNED STORE IN CHIOJA VILLAGE, 1948

(Prices where I recorded them)

●435 Cloth at 2/- to 4/6 a yard.
443 Blankets at 8/- to 20/- each.
Women's blouses, 6/9 each.
Men's vests.
Shirts and shorts (together 18/-).
Modern men's caps.
Scarves.
Sewing thread.
Cooking utensils—Pot diam. 6 in., 7/6.
Tin plates, 2/- each.
Hoes, 2/10 to 3/6, according to size.
Salt (1*d.* a cup holding about 4 oz.).
Soap (1*d.* or 2*d.* per tablet, according to size).
Tobacco (1*d.* and 6*d.* a packet).
Cigarettes at 1*d.* a packet of 10.
Tea, 1/6 lb.
Drink glasses.
Ink.
Exercise books.
Playing cards.
Shoe polish.
Shoe whitening.
Pads.
Envelopes.

STOCK CARRIED BY AFRICAN CANTEEN, LA. SMALL SHOP HOLDER

12 jars of solid brilliantine.
80 cakes of blue soap.
120 cakes of red soap.
100 packets of 10 cigarettes.
100 packets of tobacco.
6 small mirrors.
25 strings of beads.
60 lb. of coarse salt.

302 Shaving is a rite practised in mourning.[1] Some old men and women, especially medicine men, make a practice of never cutting the hair and never washing it (Pl. VII, fig. 3). One occasionally sees beauties with very long hair in the villages.

[15]

The Tao do not follow the Angoni practice of tying up into tags the hair which has been allowed to grow long with palm leaf string, but they sometimes tie up a single wisp and make it up with medicine; this is called *kadzuki* or *ajuzuki* (plur.).

The scalp may be shaved in various fashions. Among men, it is quite common to trim the hair on the forehead, *ka-ajibile*; they must not, however, trim the hair behind (Pl. XVIII, fig. 2). Women, on the contrary, trim both in front and back; a man doing so would be laughed at. A woman for the ceremony of *Lilime* shaves the front hair a little higher still, but she must be careful not to do so at other times, otherwise she would make herself a laughing stock (Pl. XVIII, fig. 10). The hair is sometimes shaved on either side of the midline in front, in imitation of temporal baldness; both baldness and this method of shaving are called *nanzunze* (Pl. XVIII, fig. 4). Or again, among old Yao men the crown is shaved; this and natural baldness are called *lakasi* (Pl. XVIII, fig. 5). It is a fashion much affected by old men and great annoyance is caused them by any young upstart who does the same. Other methods include for men *nyuka*, "a rat's path," an antero-posterior median line shaved (Pl. XVIII, fig. 9); *ingalangandinja*, two shaved lines made from back to front on either side of the head (Pl. XVIII, fig. 3); for men and women, *kpandalinda*, "the garden *ja* (dead) overgrown", one lateral half of the head shaved (Pl. XVIII, fig. 7); for men, *nakuche* a count of hair left along the mid-line, both sides of the head being shaved (Pl. XVIII, fig. 8); *mwezi* (*chilimbo cha mwezi*), "the moon," a crescent shaped area shaved on one or both sides of the head (Pl. XVIII, fig. 6).

The eyebrows and eyelashes are always left to grow normally among the Yao.

The Yao man used to take great pride in his beard; it was the object of a good deal of washing and combing. It grew to considerable length and was not cut or trimmed, but the hair growing down low over the throat was shaved, as was also the hair immediately below the mouth on the under lip and the moustache, as it was thought to get in the way when drinking. The whiskers were allowed to grow like the beard.

[832] Hair on the chin or upper lip of a woman is rarely seen and on account of its rarity is much prized. Such hairs have a monetary value for making medicines, a single hair being sold for eight yards of calico or two shillings. Body hair is considered to be a sign of strength; on the chest, it is known as *chanpalanu* (*ka-chanpalanu*, to be strong). Body hair including hair on the back is by no means as rare as has been supposed. Sir H. H. Johnston says that he has never seen it,[2] a statement which shows lack of observation. The hair on the forearms and thighs is called *chanja* or *chandwada*; Hetherwick translates this word,[3] I think wrongly, as hair on the body. Body hair is never removed in any way. A man named Katundidi ("the little vulture") of Ulundu had a very large amount of body hair; he was likened to a baboon and was a source of much interest to the children who saw him.

[1] This supra, p. 294. [2] British Central Africa, op. cit., p. 384. [3] Op. cit., p. 111.

2: Mitchell E-5 (1946-1949) 1956 FT7 Yao FT7

that the Yao occupied in Central Africa as middlemen and traders. As far back as 1798 Lacerda described the Yao rôle as active traders. They bartered ivory, slaves, beeswax and tobacco with the Arabs along the East Coast of Africa for guns, gun-powder, cloth and beads. We cannot easily estimate what proportion of the population was engaged in whole-time slaving and trading. The larger proportion must have found it necessary to cultivate their gardens of finger-millet and sorghum in the rainy season to supply them with the major food crops. It seems likely that slave-raiding and trading were occupations mostly followed during the dry season.

The Yao therefore had become accustomed to a variation of activities and division of labour, at least a century before the Whites came to Nyasaland. Their wants at this time had already become sufficiently diversified to include cloth, beads, gun-powder and guns. All these trade goods are more durable than the foodstuffs which are the measure of wealth among a people who support themselves entirely by their own produce. But the individual want for these trade goods was limited, and the Yao used their surplus rather as capital for trading farther inland with other tribes.

There is considerable evidence, both from my informants and the writings of early travellers, that these trade goods—ivory, cloth and slaves—came to be used as currency, and most people recognized a fixed relationship between the three commodities. A female slave could be exchanged for an amount of calico or ivory that was constant over fairly large parts of Central Africa; the value of a tusk of ivory could be expressed in calico in the same way. By enterprise, therefore, in trading and raiding, an individual could accumulate wealth in the form of calico, guns, beads, ivory or slaves. But the personal consumption of trade goods is of necessity limited, so that the Yao preferred to accumulate their wealth in the form of slaves. The reason for this lies in the general political structure of the early chiefdoms, which I describe later. Slaves were not only labourers and serfs; they also increased the military and political power of their masters. At the same time slaves could be sent to the coast in a caravan and bartered for cloth, or, since they were always prized, they could be used to settle claims for compensation from aggrieved neighbours. The slave trade therefore, although related to domestic

2: Mitchell E-5 (1946-1949) 1956 FT7 Yao FT7

slavery in that a trader could at any moment send some of his own slaves to the coast, was actually quite a separate institution.

Although the advent of the White Administration stopped both domestic slavery and the slave-trade to the coast, both of which were vitally important elements in Yao economy, it did nothing to decrease or reduce the variety of the wants of the Africans. On the contrary, it obviously increased those wants. The missionaries, who were the first Whites to settle in Nyasaland, were forced to import large quantities of cloth and beads so that they could buy foodstuffs and pay their labourers. They quite unintentionally, therefore, became competitors with the Yao in this trade. By some accounts their goods were both superior and cheaper. As early as 1878 the African Lakes Company was sponsored by the Church of Scotland Mission, so that it could take over the trading part of their dealings with the Africans. The planters and traders who began to settle in the highlands after 1890 brought more and more cloth, beads and other trade goods into Nyasaland to pay wages and buy foodstuffs.

When the Protectorate was proclaimed in 1891 and the Administration started to put down domestic slavery and the trade in slaves to the coast, the monopoly of trade in goods fell directly into the hands of the Whites. After 1893, when coinage was introduced, the economy of the country rapidly changed from one based on barter with slaves and ivory as the main outgoing commodities, and slaves, calico, beads and brass rings as the incoming commodities, to an economy in which the wants had become even more diversified. In 1895, the *British Central African Gazette* could record:

> The wants of the people of this part of the world not long ago were limited to sufficient calico to clothe the family, but in one short year their wants now include boots, size and quality a minor point, turbans, coats, and in fact at a distance the half-naked native of yesterday has the appearance of Sikh soldiery.[1]

That the Yao took to the use of money is illustrated by the Acting Commissioner's statement in 1897: 'The Yao thoroughly appreciate having a currency. It has proved, in fact, a great step towards civilising the native of this part of Africa. He is now able to accumulate his earnings, which formerly in the days of a

[1] Vol. i, 2 (Sept. 26th, 1894).

2: Mitchell E-5 (1946-1949) 1956 FT7 Yao FT7

436 calico currency was an impossibility.'[1] The Africans could hardly have resisted the change over to a money economy. The taxation system introduced in 1893 was based on the Governor of
436 Zululand's Proclamation III of 1887, and ruled that a tax defaulter
651 was liable to be conscripted for labour until he had earned the
687 amount of his tax. Coffee estates owned by Whites in the Highlands were at the same time in need of labour.[2] Tax was then taken in kind but it was soon changed to cash as a further inducement to Africans to come on to the labour market. The Africans were forced into the cash economy of the Protectorate even if they were unwilling. The measures were so successful that in 1899 the *Gazette* announced that the labour market in Blantyre was flooded.[3]

Modern Economic Structure

177 In modern Nyasaland, the wants of the Africans have become
511 even more varied than they were in the earlier days. Most younger men wear European-type clothing and shoes. Many own bicycles and sewing machines. Many houses have glass windows and panelled doors and most of them are furnished with some rough furniture which has been bought from local craftsmen. Many have beds and mosquito nets. Few women cannot boast of enamel dishes to replace their clay pottery or china cups to replace drinking gourds. The food habits of the peoples too have broadened. Most households use sugar these days, and many people drink tea. I should say that all households occasionally buy soap. Certainly all need salt, which formerly was burnt from the saline grass around Lake Shirwa or dissolved out of special soils in Portuguese East Africa. The stock-lists of an Indian-owned village shop in Chiwalo's area and of an African-owned canteen in the same area, which I have set out in Appendix A, indicate the range of the wants of the modern African.
434 It is clear that these wants are over and above food require-
463 ments. The people in these tribal areas live primarily on the

[1] *Report of the Consul and Acting Commissioner Sharpe on the Trade and General Condition of the British Central African Protectorate for April 1896 to March 1897.* C. 8438.

[2] See the *B.C.A. Gazette*, iii, 5 (March 1895), and iii, 17 (Sept. 15th, 1896), which print advertisements offering 'native labour arranged for and supplied to plantations at a commission of 7s. 6d. a head'.

[3] *B.C.A. Gazette*, vi, 6 (June 24th, 1899).

1: Tew E-4 (no date) 1950 FT7 Yao FT7

132 completely exhausted or reduced to a mere trickle. The average annual rainfall over
[136] the last ten years is 29·75 in. The shore waters of Lake Pamolombe are well stocked
[137] with fish. Both districts are well wooded, with a large variety of timber trees. In the dry sandy soil where the population is unable to live for lack of water, the prevalent type is *tsanya*. A line of foothills from Zomba to Chikala are conserved as Forest Reserves.[1]

MAIN FEATURES OF ECONOMY[2]

241 The Yao are chiefly agriculturists, and in the old days were also hunters. As they
[231] live largely in tsetse-infested areas, they do not keep cattle, except for a few herds near Fort Johnston and Zomba, in Nyasaland, and on the east of Lake Nyasa,[3] in the mountains of the Ruvuma valley around Mataka's.[4]

439 Abdullah describes a time when the Yao were economically self-sufficient, making their own bark-cloth, weaving, burning herbs for salt, and working iron for the tools they needed. Nevertheless, the tradition of coastward journeys for trading with the Arabs was well developed before the Europeans came to the country. They used to trade cattle and salt from the Manganja and Lomwe for tobacco and hoes, and in
[567] exchange for slaves they got from the Arabs gunpowder, guns, swords, beads, coloured cloths, earthenware, and foodstuffs.[5] Slaving expeditions were among the most important activities of the chiefs.[6] The old tradition of the absence of the men from the village owing to these expeditions, is continued in modern times by soldiers and labour migrants to Southern Rhodesia and the Union. These men send back remittances to the area, but the main population is supported by agriculture. Cash is needed for purchasing salt and cloth, for paying certain dues and fines formerly paid in kind—adultery compensation, diviner's and initiation fees—as well as for tax and rent. Consequently, while certain crops, such as tobacco and ground-nuts, are grown for cash, any food crop is liable to be sold in one form or another in local markets or by the roadside.

262 The food crops are maize, sorghum, finger millet, sweet potatoes, ground-nuts,
[241] legumes. Fish is an important article of diet. Eggs are believed to cause sterility and are only eaten by those outside the child-propagating age; milk is disliked and never consumed.[7] *Termite alates* (flying ants) are a much relished food when they come out on nuptial flights. Rice is considered a superior food, and is eaten when possible on ritual occasions.[8]

249 Tobacco is the main cash crop, with individual production under the supervision
437 of the Agricultural Department. The average cash earned per grower in 1943–4 was £5. 3*s*. This is overwhelmingly an external trade. Ground-nuts, which are sold at government-controlled markets to licensed buyers, bring in only a few shillings a year
226 to the average seller. Women obtain cash by selling beer. At the lake shore the fishing
439 industry is very important. Natives owning big nets are said to make between £20

[1] Murray, 1932, pp. 147–61.

[2] Unless otherwise stated, the information is from J. C. Mitchell, and relates to the Yao of south Nyasaland.

[3] Young, E., 1877, p. 102.

[4] Livingstone, 1874, pp. 72 and 80.

[5] Abdullah, 1919, pp. 10–11, 26–30.

[6] See Livingstone, 1874, p. 68; Young, E., 1877, p. 139; Thompson, 1882, p. 78; Sclater, 1893, p. 422; Maugham, 2, 1929, pp. 86–7; Laws, 1934, pp. 35–7.

[7] Stannus, 4, 1922, p. 34.

[8] Barker, 1934, p. 14.

1: Tew E-4 (no date) 1950 FT7 Yao FT7

and £30 per annum. It is profitable to carry fresh fish inland by bicycle even as far as Blantyre,[1] as the shore price to the retailer is 4*s.* a load, which later may fetch from 16*s.* to 24*s.*[2] Yao on the south-west lake shore grow an excellent quality rice.[3] Rice is also grown near Lake Chilwa, but is mainly sold in the market organized near the lake shore by the Agricultural Department.

Division of Labour

The man builds the house, hunts, fishes, makes the nets, baskets, grain-store, game-traps, and, in the old days, the bark-cloth. He cultivates the tobacco. He cuts down the trees and may help with the hoeing and harvesting. The woman hoes, muds the floor of the hut, sweeps, cooks, brings firewood, draws water, brews beer, makes the pots and pipes.[4]

Land Usage

There are two types of garden in the Yao areas south of Lake Nyasa: one the ordinary garden in which the staples grow, and second, gardens along the stream beds. These latter are especially valuable for providing out-of-season crops. In addition most householders have a few small plots for tobacco and ground-nuts.

The main garden is cultivated by the slash-and-burn method, common in Central Africa. The Yao, unlike the Bemba, garden occupies the whole area cleared. Burning is done just before the rainy season (October–November). The ash and soil are hoed into elongated mounds and grain is planted along the ridges. Gardens may be cultivated for more than five years. In the second and subsequent years of cultivation the stalks and weeds are piled up and burnt. There are signs of soil impoverishment. The gardens are cleared in August, and heaped to dry for burning. After the burning the seeds are planted in late November. By February and March green maize is available to supplement the diet, and by the end of April the crops are ready to be harvested. The maize is stored in wicker containers, while sorghum is stored in the huts on a stand. Cassava is planted in large mounds made by turning the turfs over, so that the roots are outside the mound and the vegetable matter inside. Legumes are planted in smaller gardens, or interplanted with the main crop. Ground-nuts are stored, after being shelled, in mud-plastered wicker containers, designed to be rat-proof. Tobacco is planted at the sides of the streams for hand-watering in the seedling stage, and then transplanted about January. The leaves are ready to be plucked about April and soon afterwards they are marketed. Sweet potatoes are planted in the rainy season, and are ready for eating in May. The stream gardens yield out-of-season crops—maize, beans, pumpkins, and also sugar-cane, which is used in the initiation ceremonies.

Craftsmanship

The Yao have few skills. All cultivation is by hoe; axes and knives are their only other technological equipment. The men make mats from reeds and palm leaf, and the women make pottery. The huts are strongly built from poles laced with bamboo and plastered with mud. The roof is thatched with grass. Under Arab influence the

[1] *Census of Native Population*, 1931, p. 26.
[2] Codrington, 1898, p. 517.
[3] Aplin, 1931, p. 19.
[4] Stannus, 4, 1922, p. 236; Macdonald, 1882, vol. i, p. 137.

2: Mitchell E-5 (1946-1949) 1956 FT7 Yao FT7

themselves Alomwe. These people came from that part of Portuguese East Africa immediately to the east of Nyasaland. They speak a group of dialects mutually intelligible and widely different from either Yao or Nyanja. Culturally and structurally they are similar to the Yao and Nyanja, practising matrilineal descent and uxorilocal marriage, and living in small groups of matrilineal kin. Their religious and mystical beliefs are also the same. Some of the linguistic groups that form this congeries are the Shirima, Kokhola, Metho, Thokwani, Ratha, Kuwa, Nahara, Marenje, Nyamwelo, Mihavani and Nikhukhu. These people have been migrating into Nyasaland over the last fifty years, and now predominate in the Cholo and Chiradzulu districts. 563

The Nyanja were the original inhabitants in these areas, but have been almost completely displaced by the Yao, except in Liwonde along the Shire River and in Kawinga along the Lake Shirwa shores. Linguistically they are more akin to the Yao than to the Lomwe, but their language is still unintelligible to the Yao. Culturally they appear to be similar to the Yao, and they have accepted certain Yao institutions such as the boys' initiation ceremonies (*lupanda*), and have been fitted into the social and political structure.

The Ngoni, of whom there are very few here, are concentrated on the south side of the Chikala Range, in the areas of Chamba and Mposa, who are subordinate chiefs to Kawinga. They are the remnants of various Ngoni armies that raided into Nyasaland during the last two or three decades of the nineteenth century. As far as I could ascertain they have adopted Nyanja ways and language.

Historical Background to the Modern Economic Situation

Nyasaland to-day, as part of the British Empire, is in the general world economic system, and the Africans in the tribal areas participate in this system, though not to the same degree as the White planters in the Shire and Dedza Highlands. If the Yao were ever a people who supported themselves by their agriculture alone, they had adopted a more complex economy long before the Whites came to Nyasaland. Later, when I discuss their historical background, I outline briefly the position 439

2: Mitchell E-5 (1946-1949) 1956 FT7 Yao FT7

439 that the Yao occupied in Central Africa as middlemen and traders. As far back as 1798 Laçerda described the Yao rôle as active traders. They bartered ivory, slaves, beeswax and tobacco with the Arabs along the East Coast of Africa for guns, gun-powder, cloth and beads. We cannot easily estimate what proportion of the population was engaged in whole-time slaving and trading. The larger proportion must have found it necessary to cultivate their gardens of finger-millet and sorghum in the rainy season to supply them with the major food crops. It seems likely that slave-raiding and trading were occupations mostly followed during the dry season.

The Yao therefore had become accustomed to a variation of activities and division of labour, at least a century before the Whites came to Nyasaland. Their wants at this time had already become sufficiently diversified to include cloth, beads, gun-powder and guns. All these trade goods are more durable than the foodstuffs which are the measure of wealth among a people who support themselves entirely by their own produce. But the individual want for these trade goods was limited, and the Yao used their surplus rather as capital for trading farther inland with other tribes.

436 There is considerable evidence, both from my informants and
the writings of early travellers, that these trade goods—ivory,
439 cloth and slaves—came to be used as currency, and most people
567 recognized a fixed relationship between the three commodities. A female slave could be exchanged for an amount of calico or ivory that was constant over fairly large parts of Central Africa; the value of a tusk of ivory could be expressed in calico in the same way. By enterprise, therefore, in trading and raiding,
439 an individual could accumulate wealth in the form of calico, guns,
556 beads, ivory or slaves. But the personal consumption of trade
567 goods is of necessity limited, so that the Yao preferred to accumulate their wealth in the form of slaves.[9] The reason for this lies in the general political structure of the early chiefdoms, which I describe later. Slaves were not only labourers and serfs; they also increased the military and political power of their masters. At the same time slaves could be sent to the coast in a caravan and bartered for cloth, or, since they were always prized, they could be used to settle claims for compensation from aggrieved neighbours. The slave trade therefore, although related to domestic

2: Mitchell E-5 (1946-1949) 1956 FT7 Yao FT7

slavery in that a trader could at any moment send some of his own slaves to the coast, was actually quite a separate institution.

Although the advent of the White Administration stopped both domestic slavery and the slave-trade to the coast, both of which were vitally important elements in Yao economy, it did nothing to decrease or reduce the variety of the wants of the Africans. On the contrary, it obviously increased those wants. The missionaries, who were the first Whites to settle in Nyasaland, were forced to import large quantities of cloth and beads so that they could buy foodstuffs and pay their labourers. They quite unintentionally, therefore, became competitors with the Yao in this trade. By some accounts their goods were both superior and cheaper. As early as 1878 the African Lakes Company was sponsored by the Church of Scotland Mission, so that it could take over the trading part of their dealings with the Africans. The planters and traders who began to settle in the highlands after 1890 brought more and more cloth, beads and other trade goods into Nyasaland to pay wages and buy foodstuffs.

When the Protectorate was proclaimed in 1891 and the Administration started to put down domestic slavery and the trade in slaves to the coast, the monopoly of trade in goods fell directly into the hands of the Whites. After 1893, when coinage was introduced, the economy of the country rapidly changed from one based on barter with slaves and ivory as the main outgoing commodities, and slaves, calico, beads and brass rings as the incoming commodities, to an economy in which the wants had become even more diversified. In 1895, the *British Central African Gazette* could record:

> The wants of the people of this part of the world not long ago were limited to sufficient calico to clothe the family, but in one short year their wants now include boots, size and quality a minor point, turbans, coats, and in fact at a distance the half-naked native of yesterday has the appearance of Sikh soldiery.[1]

That the Yao took to the use of money is illustrated by the Acting Commissioner's statement in 1897: 'The Yao thoroughly appreciate having a currency. It has proved, in fact, a great step towards civilizing the native of this part of Africa. He is now able to accumulate his earnings, which formerly in the days of a

[1] Vol. i, 2 (Sept. 26th, 1894).

2: Mitchell E-5 (1946-1949) 1956 FT7 Yao FT7

tenance of the whole state under a new king,[1] but the Yao 175
political units seem to have split into two factions when divisions 643
appeared within them. The dissident faction left the parent chiefdom and established itself somewhere else as an independent entity.

The picture my informants have given me substantiates Mac- 175
Donald's account, though his contact was mainly with Mangoche 439
and not with Machinga Yao. My informants, however, placed 484
greater emphasis than he did upon the importance of trade with 567
the coast. A slave-trading trip was not a venture which the 622
ordinary village headman could undertake with equanimity. 643
The journey to the coast, to Quilimane or to Kilwa, was long and arduous, and strong military protection against bandits was needed. A caravan could only be sent by a chief or someone of like status, so that the coastal trade became the monopoly of the chiefs. Headmen who had ivory and slaves to send to the coast included them in the chief's caravan. When it returned, the headmen were able to collect calico and beads to the value of their contribution. Gun-powder also seems to have been a chief's monopoly. Thus, in fact, he did have some physical control over the military activities of his subject village headmen, since he could withhold supplies of gun-powder if he wished. But in a society where minor chieftains were inimically poised against each other, the maxim 'a chief without people is nothing' had much more significance than it has to-day: a village headman's ultimate sanction was that he could withdraw his support from one chief and give it to another.

The Effects of White Conquest

It was into a society thus organized that the first Missionaries 175
came. I have already described how the Missionaries, by taking 643
in runaway slaves, and by occasional armed combat, entered 648
into political relationships with the chiefs. With the establishment of the Protectorate, the policy, clearly expressed in Sir Harry Johnston's letter,[2] was to stamp out slavery. This was done in numerous campaigns against the Yao chiefs [3] so that by

[1] See Gluckman, M., 'Succession and Civil War among the Bemba: An Exercise in Anthropological Theory', *Human Problems*, xvi (1954), 6–25.
[2] See f.n., p. 29. [3] See Chap. II, pp. 29–30.

3: Stannus D-5 (ca. 1912) 1922 FT7 Yao FT7

two feet high and fifteen inches in diameter, hollowed out from above for about two-thirds of its length. Many are made with a kind of base or stand, and some have roughly carved bosses on the outside; these are called "the breasts," doubtless emblematical of women, a large part of whose life is spent in preparing flour (Pl. XV, fig. 15). 412 [532]

The fire-stick. Matches are becoming more widespread year by year and soon the knowledge of how to make fire with a fire drill will be lost. The method employed among the Yao is as follows: a flat surface is cut on a piece of partly rotted wood. In the middle of this a small depression is made, and on one side of the piece of wood a groove is cut leading from the flat cut surface. The piece of wood is held firmly on the ground by one person with a piece of old scorched cloth or some charred sticks at the base of the groove. A second person, by rolling a stick of hard wood rapidly between his hands with the point directed against the depression on the flat surface in which a little sand has been placed, drills a hole into it. The heat developed is sufficient to cause the powdered rotten wood to start smouldering. This is then turned out on the cloth, which is gently waved in the air till it catches fire (Pl. XV, fig. 16). 372 [177]

Boats. With the exception of a small coracle-like vessel, *likuiqua*, made of rough bark and used for crossing streams, the Yao have no boats. The dug-out canoes which they use at the present day are made for them by the Anyanja. In addition to the bark boat, they use a kind of raft made from the pith tree, *bunqua*. 501 [439]

Tobacco. The use of tobacco in some form is universal among the tribes of Nyasaland and the Yao are no exception. The method of use varies among the different peoples; smoking, chewing, and snuffing are all practiced, but while the Anyanja is essentially a pipe-smoker, the Yao takes snuff, although I think only lately he has also taken up smoking and chewing. A short time ago, a Yao who chewed would have been laughed at. The Anyanja do not chew but take snuff to a certain extent; the Angoni who do not smoke or chew are inveterate snuff-takers; the Atumbuka, Atonga, Asenga, and Ankonde are pipe-smokers and in lesser degree snuff-takers. 276

Tobacco is called *sona* (*fodia*. Chin.). It is prepared by sun-curing the leaf, which is then rolled up into a twist and allowed to dry further. The common tobacco pipe consists of a clay bowl, often ornamented, and a reed stem; it was formerly called *chilongo*, but is now known as *halie* (Pl. XV, fig. 11). For hemp, *chamba*, the Yao use a water pipe called *ndundu* (*ngunda*, Chin.); this consists of a bamboo water container from which projects a reed stem surmounted by a clay bowl (Pl. XV, fig. 13). The word *ndundu* is also used for a tobacco pipe.

When tobacco is chewed, a little lime paste *swakala* made from snail shells is put in the mouth "to bring out the flavor," a small clay jar being used to carry the *swakala*.

Both the Wayao and the Anyanja prepare snuff by grinding the broken-up tobacco leaves with a stone in a potsherd; the powder is then turned out into another sherd and warmed over a fire. A few drops of a preparation called *magodi* is added for flavor. *Magodi* is

[P. 142B]

II. The Political Structure
BEFORE THE WHITES CAME

173 643 167 (*kukamula lukongolo*), i.e. to surrender to the chief in the area. Also the chief sent out expeditions to capture slaves or he purchased slaves with the cloth and beads he had exchanged for ivory at the East coast.

643 421 Within his territory certain privileges and rights were held by the chief and he had certain religious duties to perform in which the unity of the people in the territory was expressed. In general the chief had rights over any ivory either found or hunted in his territory. If a dead elephant were found the tusks belonged to the chief, though he usually rewarded the finder with cloth. If a man killed an elephant the tusk that lay on [224] the ground belonged to the chief while the other belonged to the killer. The killer's tusk was in- [439] cluded in the chief's caravan to the coast and its value paid in cloth to the killer when the caravan returned.

643 651 The chief was also entitled to an annual tribute of food and beer from all villages in his area, but this was used to entertain visitors who came to the court-village.

643 782 The chief's religious duties lay mainly in propitiating the spirits of his ancestors on occasions when the community at large, in contrast to the chief's own private affairs, was either threatened or directly affected. The most obvious occasion was immediately before the rains came when flour was poured on the tree shrine and the spirits of the ancestors asked for good rains. Later when the rains were over a similar sacrifice was made asking for a good harvest. Sacrifices to the ancestors were also made on two other public occasions. They were made when some calamity had occurred or was believed to be impending. A run of unsuccessful campaigns induced Cingwalugwalu, a son of the Yao chief Mponda near Fort Johnston, to ask his father's father's brother to make sacri-

2: Mitchell E-5 (1946-1949) 1956 FT7 Yao FT7

STOCK SOLD AT AN INDIAN-OWNED STORE IN CHOJA VILLAGE, 1948

(Prices where I recorded them)

435 Cloth at 2/- to 4/6 a yard.
443 Blankets at 8/- to 20/- each.
Women's blouses, 6/9 each.
Men's vests.
Shirts and shorts (together 18/-).
Moslem men's caps.
Scarves.
Sewing thread.
Cooking utensils—Pot diam. 6 in., 7/6.
Tin plates, 2/- each.
Hoes, 2/10 to 3/6, according to size.
Salt (1*d.* a cup holding about 4 oz.).
Soap (1*d.* or 2*d.* per tablet, according to size).
Tobacco (1*d.* and 6*d.* a packet).
Cigarettes at 1*d.* a packet of 10.
Tea, 1/6 lb.
Dark glasses.
Ink.
Exercise books.
Playing cards.
Shoe polish.
Shoe whitening.
Pads.
Envelopes.

STOCK CARRIED BY AFRICAN CANTEEN, I.E. SMALL SHOP HOLDER

12 jars of solid brilliantine.
80 cakes of blue soap.
120 cakes of red soap.
100 packets of 10 cigarettes.
100 packets of tobacco.
6 small mirrors.
25 strings of beads.
60 lb. of coarse salt.

1: Tew E-4 (no date) 1950 FT7 Yao FT7

and £30 per annum. It is profitable to carry fresh fish inland by bicycle even as far as Blantyre,[1] as the shore price to the retailer is 4*s.* a load, which later may fetch from 16*s.* to 24*s.*[2] Yao on the south-west lake shore grow an excellent quality rice.[3] Rice is also grown near Lake Chilwa, but is mainly sold in the market organized near the lake shore by the Agricultural Department.

Division of Labour

The man builds the house, hunts, fishes, makes the nets, baskets, grain-store, game-traps, and, in the old days, the bark-cloth. He cultivates the tobacco. He cuts down the trees and may help with the hoeing and harvesting. The woman hoes, muds the floor of the hut, sweeps, cooks, brings firewood, draws water, brews beer, makes the pots and pipes.[4]

Land Usage

There are two types of garden in the Yao areas south of Lake Nyasa: one the ordinary garden in which the staples grow, and second, gardens along the stream beds. These latter are especially valuable for providing out-of-season crops. In addition most householders have a few small plots for tobacco and ground-nuts.

The main garden is cultivated by the slash-and-burn method, common in Central Africa. The Yao, unlike the Bemba, garden occupies the whole area cleared. Burning is done just before the rainy season (October–November). The ash and soil are hoed into elongated mounds and grain is planted along the ridges. Gardens may be cultivated for more than five years. In the second and subsequent years of cultivation the stalks and weeds are piled up and burnt. There are signs of soil impoverishment. The gardens are cleared in August, and heaped to dry for burning. After the burning the seeds are planted in late November. By February and March green maize is available to supplement the diet, and by the end of April the crops are ready to be harvested. The maize is stored in wicker containers, while sorghum is stored in the huts on a stand. Cassava is planted in large mounds made by turning the turfs over, so that the roots are outside the mound and the vegetable matter inside. Legumes are planted in smaller gardens, or interplanted with the main crop. Ground-nuts are stored, after being shelled, in mud-plastered wicker containers, designed to be rat-proof. Tobacco is planted at the sides of the streams for hand-watering in the seedling stage, and then transplanted about January. The leaves are ready to be plucked about April and soon afterwards they are marketed. Sweet potatoes are planted in the rainy season, and are ready for eating in May. The stream gardens yield out-of-season crops—maize, beans, pumpkins, and also sugar-cane, which is used in the initiation ceremonies.

Craftsmanship

The Yao have few skills. All cultivation is by hoe; axes and knives are their only other technological equipment. The men make mats from reeds and palm leaf, and the women make pottery. The huts are strongly built from poles laced with bamboo and plastered with mud. The roof is thatched with grass. Under Arab influence the

[1] *Census of Native Population*, 1931, p. 26.
[2] Codrington, 1898, p. 517.
[3] Stannus, c. 1902, p. 236; Macdonald, 1882, vol. i, p. 137.
[4] Aylin, 1931, p. 19.

3: Stanner D-5 (ca. 1912) 1922 FT7 Yao FT7

585 dress of her married life begins. The man and woman live together peaceably enough as a rule, each attending to his own sphere of work. The man builds the house, the woman
462 ● mends the floors; she sweeps and cooks, she is the hewer of wood and drawer of water. The man hunts, fishes, makes mats, baskets, the grain store, game traps, and bark-cloth; he looks after the tobacco, and makes the snuff, while his wife brews the beer. He it is who fashions the gourd vessels and carves the spoons, while the woman is the potter (Pl. III, 4) and pipe-maker. Together they hoe and together they harvest, but to the woman falls the monotonous drudgery of pounding and sifting the corn for flour.

842 The Yao have a custom like that of the Anyanja. A sister brings to the house of the newly wedded pair a log of green wood from a mbonga tree which is very hard; the log
[522] may be two feet in diameter and four feet long. Should the bride not become pregnant before it is burned away, the husband is laughed at and they may both be teased by having
[558] many logs brought to the house. A man who has no children is much despised and there is a saying, "He must have eaten some ground-nuts," punning on the word for a thick-skinned variety of ground-nut, chimbwanda, a word which also means sterility. An impotent
[837] man may, with the consent of his wife, introduce some male friend into the house, any children born in consequence being claimed as the husband's. He usually chooses some friend from a distance to obviate any attachment springing up between him and the wife. Two married couples may, all consenting, exchange consorts for the night, but they never live together like this for long periods.

582 There is one well-defined marriage taboo; a man may not marry a woman of his own clan. In the old days, he was also restricted to his own tribe, except in the case of slave
[611] wives and wives by capture. Since the clan is inherited from the mother,[1] a man may not
[587] marry the daughters of his maternal aunts, but he may marry his other female cousins. He may not marry two sisters nor a deceased wife's sister; neither do two brothers marry two sisters.

595 The number of wives is limited only by the husband's ability to provide for them. In addition to free wives, a man might formerly have a number of slave wives. The head wife is called *Inapele*, the other wives, *mapembe*. The word given by Macdonald, *alwapele*,[2] meaning the junior wives, is a Chinyanja word and, I think, wrongly applied.

582 It has been said that a man always marries into the village of his wife. For this reason,
[917] female children are always prized as it means an increase in the number of able-bodied
[583] men added to the village. In rare cases, the wife might be taken to the husband's village, as is the Anyanja practice.[3] This, of course, is true in the case of chiefs and headmen. Here, we may also note that no payment is made for the wife and no dowry is received with her.

589 To revert to betrothal, occasionally the sponsors will not agree to the marriage and a
843 runaway match takes place, but in the end, the marriage is usually regularized by the sponsors coming to an agreement. If, however, the woman has in the meantime become

[1] Vide infra, p. 298. [2] Op. cit., p. 134. [3] Stanner, op. cit., p. 308.

2: Mitchell E-5 (1946-1949) 1956 FT7 Yao FT7

436 calico currency was an impossibility.'[1] The Africans could hardly have resisted the change over to a money economy. The taxation system introduced in 1893 was based on the Governor of
436 Zululand's Proclamation III of 1887, and ruled that a tax defaulter
651 was liable to be conscripted for labour until he had earned the
667 amount of his tax. Coffee estates owned by Whites in the Highlands were at the same time in need of labour.[2] Tax was then taken in kind but it was soon changed to cash as a further inducement to Africans to come on to the labour market. The Africans were forced into the cash economy of the Protectorate even if they were unwilling. The measures were so successful that in 1899 the *Gazette* announced that the labour market in Blantyre was flooded.[3]

Modern Economic Structure

777 In modern Nyasaland, the wants of the Africans have become
511 even more varied than they were in the earlier days. Most younger men wear European-type clothing and shoes. Many own bicycles and sewing machines. Many houses have glass windows and panelled doors and most of them are furnished with some rough furniture which has been bought from local craftsmen. Many have beds and mosquito nets. Few women cannot boast of enamel dishes to replace their clay pottery or china cups to replace drinking gourds. The food habits of the peoples too have broadened. Most households use sugar these days, and many people drink tea. I should say that all households occasionally buy soap. Certainly all need salt, which formerly was burnt from the saline grass around Lake Shirwa or dissolved out of special soils in Portuguese East Africa. The stock-lists of an Indian-owned village shop in Chiwalo's area and of an African-owned canteen in the same area, which I have set out in Appendix A, indicate the range of the wants of the modern African.
434 It is clear that these wants are over and above food require-
465 ments. The people in these tribal areas live primarily on the

[1] *Report of the Consul and Acting Commissioner Sharpe on the Trade and General Condition of the British Central African Protectorate for April 1896 to March 1897.* C. 8458.

[2] See the *B.C.A. Gazette*, iii, 3 (March 1895), and iii, 17 (Sept. 15th, 1896), which print advertisements offering 'native labour arranged for and supplied to plantations at a commission of 7s. 6d. a head'.

[3] *B.C.A. Gazette*, vi, 6 (June 24th, 1899).

2: Mitchell E-5 (1946-1949) 1956 FT7 Yao FT7

crops grown in their gardens. For their other wants they need cash, and they obtain it either by the sale of their agricultural produce, by trading with their fellows, or by seeking work either within or outside the area. The sale of agricultural produce is probably the most important. A few Africans earn a small living as blacksmiths, bicycle repairers, diviners and leeches, fish pedlars and tailors. There are some African canteen or small shop owners, but this field is dominated by the Indians, who between them have a few dozen village and roadside stores.

A certain amount of money is sent or brought home by labour migrants. I could not estimate how much this is for each household. It cannot be very high on the average, because not a great proportion is working at labour centres outside the area of study.[1] Within the Territory there are few opportunities of earning wages. In Jalasi's area there are one or two White tobacco estates, which employ at the most a few hundred labourers, and a number of Indian storekeepers who may between them employ a hundred men. Otherwise the Government itself, through the Agriculture Department in particular, may employ a hundred or more labourers. There are more opportunities south of Chikala and in the densely populated Malemia area where a considerable number are employed in the neighbouring township, Zomba, and on the surrounding estates. The cash income per adult, male and female, in the area where this study was made probably does not exceed £40 to £50 per annum, and the Yao rely mainly on the sale of their own produce to earn this amount.

[1] I estimate from genealogies that about 22 per cent of the men over the age of 18 were at labour centres in 1947–8. Table 3 of the 1945 Census shows that, excluding those in the Army, 28 per cent of the men over the age of 18 were away from Liwonde and Fort Johnston districts when the census was taken.

1: Tew E-4 (no date) 1950 FT7 Yao FT7

342 You make square houses.[1] Panelled doors and glass windows, deck-chairs and palm
177 furniture are becoming more and more popular. The men wear long Moslem robes
[29] and the women are clothed in cotton. In the rural areas there are usually a few craftsmen who still ply their trades as carpenters and blacksmiths, though the latter no
326 longer smelt, but use scrap-iron.

Labour Migration

162 Statistics are not available for the Yao of Portuguese East Africa or Tanganyika
464 Territory. Yao constitute 34 per cent. of the total population of South Nyasa district, 15 per cent. of upper Shire, 11 per cent. of Blantyre and Zomba.[2] The proportion of labour migrants in these districts was in 1937 as follows:[3]

District	*Adult males fit to work*	*Percentage of emigrants*	*Number producing economic crops*	*Number of subsistence producers*	*Emigrants not heard of since 1937*
South Nyasa	24,230	27·1	2,910 (12%)	12,095 (49%)	873
Upper Shire	24,873	15·9	1,555 (10%)	18,849 (87%)	633
Blantyre	25,330	13·6	3,788 (15%)	10,185 (40%)	986
Zomba	18,879	12·4	3,790 (20%)	9,040 (53%)	511

[39] South Nyasa district, which is unfertile waterless bush with a long history of famine and food shortage, has the highest proportion of labour migrants. Upper Shire, though not fertile, is more prosperous, benefiting from the tobacco- and cotton-growing industries, and from the dried-fish trade.[4]

SOCIAL ORGANISATION AND POLITICAL STRUCTURE

Kinship and Local Grouping

611 Among the Yao succession is matrilineal and marriage mainly matrilocal. Accord-
[59] ing to some informants succession formerly passed down the line of brothers, as with the Bemba, but it now passes direct to the eldest sister's eldest son, or to descendants of other sisters in order of seniority.[5] Chiefly succession follows the same rule, but the most senior may be set aside for a more suitable candidate.[6]

611 Clan names, *dzinyo*, are inherited matrilineally, and formerly designated exogamous units,[7] but the marriage prohibition has now ceased to operate. Holders of the same
614 clan name are unable to trace descent from a common ancestress, and for commoner clan names seem to have quite lost their significance; they are, however, carefully remembered in the chiefly lines and in other lines of hereditary rank, such as village headmen.

614 Within the general kinship grouping of the clan, a smaller group is recognized,
613

[1] Watson, 1908, p. 125; Macdonald, 1882, vol. i, pp. 20-2, describes a round hut.
[2] 1931 Census information is taken because the district boundaries were changed between 1931 and 1945, so that the information in the 1945 Census would not be compatible or comparable with that given in the 1937 Survey of Male Adult Population in the *Bell Report*, Appendix A.
[3] *Bell Report*, 1938, Appendix A. [4] Smith, 1937.
[5] Information, unless otherwise stated, is from Mitchell, and refers to south Nyamkumbi Yao.
[6] Johnston, 1897, p. 471; Meredith Sanderson, 1900, p. 370. Cf. Macdonald, 1882, vol. i, p. 183, who says that headmen inherit before sister's son.
[7] Ibid., p. 189. [8] Sanderson, op. cit., p. 238.

2: Mitchell E-5 (1946-1949) 1956 FT7 Yao FT7

crops grown in their gardens. For their other wants they need cash, and they obtain it either by the sale of their agricultural produce, by trading with their fellows, or by seeking work either within or outside the area. The sale of agricultural produce is probably the most important. A few Africans earn a small living as blacksmiths, bicycle repairers, diviners and leeches, fish pedlars and tailors. There are some African canteen or small shop owners, but this field is dominated by the Indians, who between them have a few dozen village and roadside stores.

A certain amount of money is sent or brought home by labour migrants. I could not estimate how much this is for each household. It cannot be very high on the average, because not a great proportion is working at labour centres outside the area of study.[1] Within the Territory there are few opportunities of earning wages. In Jalasi's area there are one or two White tobacco estates, which employ at the most a few hundred labourers, and a number of Indian storekeepers who may between them employ a hundred men. Otherwise the Government itself, through the Agriculture Department in particular, may employ a hundred or more labourers. There are more opportunities south of Chikala and in the densely populated Malemia area where a considerable number are employed in the neighbouring township, Zomba, and on the surrounding estates. The cash income per adult, male and female, in the area where this study was made probably does not exceed £40 to £50 per annum, and the Yao rely mainly on the sale of their own produce to earn this amount.

[1] I estimate from genealogies that about 22 per cent of the men over the age of 18 were at labour centres in 1947-8. Table 3 of the 1945 Census shows that, excluding those in the Army, 28 per cent of the men over the age of 18 were away from Liwonde and Fort Johnston districts when the census was taken.

6: Mitchell E-5 (1946-1947) 1949 FT7 Yao FT7

believe that she will die. The man's representatives are therefore able to establish the child's paternity from the birth-pang confessions of the woman.

The child is kept in the hut where it was born, for six or seven days, while the umbilical cord dries and falls off. During this time (*kwal*) the child is unnamed, and it is named only when it is taken out of the hut. Should it die during this period of seclusion it remains unnamed and is referred to by a special term (*ilaya*, pl. *matupa*). I have therefore been able to enumerate live births by means of the distinction made between miscarriages and still-births (*kwenga*) and children who lived long enough to be referred to as *matupa*. After the birth of the child the woman may not have intercourse for four or five months. To do so would be to endanger the life of the child with a disease called *ndoka*,[1] which is contracted by a sexually inactive person when he comes into contact with a sexually active person. The husband may have intercourse with a second wife, but must take care to medicate himself so that he does not endanger the life of his child. When the child is about 4 or 5 months of age the parents perform ritual intercourse and medicate the child against the mystical dangers of sexual activity; sexual relations are then resumed.

The Yao say that a second child should not be born while the first is still being suckled. Since lactation continues for about two years I am uncertain whether monogynists remain continent, as they say they do, or whether *coitus interruptus* is practised. It is quite usual for husbands to become labour migrants when their children are still very young. I have known women to write to their husbands who are away working and tell them to return because their children have 'grown', i.e. have been weaned. Labour recruiters had difficulty in recruiting men immediately after the soldiers had been demobilized at the end of the war, because the women objected, saying that they had remained childless long enough and the men must first wait until children were born. However, actual examination of birth-dates shows that children are sometimes born within a year of one another and sometimes there are quite big gaps. The two-year gap between children is probably an ideal which few attain.

5. The Estimation of Fertility

(a) *Sundbarg's Age Divisions*

As a preliminary estimate of fertility, Sundbarg's trichotomy of ages may be considered. The argument behind this division of the population into Youth, Middle Age, and Old Age is that those populations with a high proportion of youth have a greater tendency to increase. Table V shows this trichotomy for the Yao with the same material for some other populations shown for comparison. Where the gross reproduction-rate is known for the period shown in the table, this is included.

At any one time a certain proportion of the population is absent from the area, usually at some labour centre. Hence the proportions of the population are distributed abnormally. In all there appeared to be a total of sixty-three men, women, and children absent from the hamlets, who would otherwise have been living there. Hence in Table V these have been included in the totals in the 'Yao with absentees' proportions.

[1] A disease of this sort is believed in by many Central African tribes. Among the Nyanja-speaking peoples it is known as *ciwapi*.

2: Mitchell E-5 (1946-1949) 1956 FT7 Yao FT7

villages, however, the headman's activities may be as circumscribed by ritual prohibitions as the chief's are. 622 554

The village headman is subject not only to mystical dangers but also to other dangers deriving from his position of authority. It is significant that villagers never go to a diviner to find out the cause of a village headman's death. When I asked informants why this was so, they said, 'Well, what's the use of it? He has enemies on all sides in the village who are trying to kill him with their magic.' In harmony with this view of village headmanship, the symbolic object which represents the village headman in the diviners' gourds I have seen, is a small ring of grass (*singwa*), a copy of the grass cushion women place on their heads when they are carrying loads. This symbolizes the ring of enemies which surrounds the village headman. The saying 'the tortoise defecates on the one who carries it',[1] usually applied to chieftainship, applies equally well to a village headman. 622 787 578 [482]

A village headman may expect little material benefit from his position of authority. If he is an Administrative village headman he may be paid a small annuity of 5*s*. or 10*s*.[2] Returning labour migrants may give him a blanket or a military overcoat, or perhaps a few shillings, but this is not usual. If he is not a strict Moslem he will almost certainly be given a pot of beer from every brewing made for sale in the local 'club house'. On the other hand, if an important stranger, particularly a White official, arrives in the village he feels he must give his guest a chicken. It is mannerly to reciprocate with another gift, but not all Whites know this, or, if they do, do not observe it. In particular if the chief comes to his village, he will be expected to entertain him and here can expect no recompense—the chief 'eats from his country'. 622 651 431

The Yao know that the position of headman is no sinecure. Frequently the one chosen to succeed refuses to accept the position, especially if he is well placed in employment. It is significant that the word for an heir is *litegwa*[3]—the one who is trapped. An 622 594

[1] *Ngwe jikwepele nayene iwajigele.*

[2] Until recently this was true. As I was leaving the field in 1949, I heard that the Administration had decided to abandon this system in favour of one in which only group headmen would be remunerated.

[3] Substantive form of the passive of the verb *kutega*—to set a trap as for animals. This word is not widely known, especially among the younger Yao.

2: Mitchell E-5 (1946-1949) 1956 FT7 Yao FT7

tenance of the whole state under a new king,[1] but the Yao 175
political units seem to have split into two factions when divisions 643
appeared within them. The dissident faction left the parent chiefdom and established itself somewhere else as an independent entity.

The picture my informants have given me substantiates Mac- 175
Donald's account, though his contact was mainly with Mangoche 439
and not with Machinga Yao. My informants, however, placed 484
greater emphasis than he did upon the importance of trade with 567
the coast. A slave-trading trip was not a venture which the 622
ordinary village headman could undertake with equanimity. 643
The journey to the coast, to Quilimane or to Kilwa, was long and arduous, and strong military protection against bandits was needed. A caravan could only be sent by a chief or someone of like status, so that the coastal trade became the monopoly of the chiefs. Headmen who had ivory and slaves to send to the coast included them in the chief's caravan. When it returned, the headmen were able to collect calico and beads to the value of their contribution. Gun-powder also seems to have been a chief's monopoly. Thus, in fact, he did have some physical control over the military activities of his subject village headmen, since he could withhold supplies of gun-powder if he wished. But in a society where minor chieftains were inimically poised against each other, the maxim 'a chief without people is nothing' had much more significance than it has to-day: a village headman's ultimate sanction was that he could withdraw his support from one chief and give it to another.

The Effects of White Conquest

It was into a society thus organized that the first Missionaries 175
came. I have already described how the Missionaries, by taking 643
in runaway slaves, and by occasional armed combat, entered 648
into political relationships with the chiefs. With the establishment of the Protectorate, the policy, clearly expressed in Sir Harry Johnston's letter,[2] was to stamp out slavery. This was done in numerous campaigns against the Yao chiefs[3] so that by

[1] See Gluckman, M., 'Succession and Civil War among the Bemba: An Exercise in Anthropological Theory', *Human Problems*, xvi (1954), 6-25.
[2] See f.n., p. 29.
[3] See Chap. II, pp. 29-30.

3: Stannus D-5 (ca. 1912) 1922 FT7 Yao FT7

19. That portion of the gut of animals having folds of mucus membrane inside, may be eaten only by old people past the child-propagating age. If a young woman should eat it, she would have difficulty in labor. 771 784 062

20. It is believed that people who eat too freely of a little fish like whitebait called *matemba* get obstruction of the bowel by the wedging together of the bones. The treatment adopted is to pass up the rectum a smooth stick with a pad of rag at the end. This cannot be done by the person himself and so the aid of another has to be called in; only an intimacy, such as the relationship of brother-in-law gives, will warrant this service being asked.

21. The Yao believe that there is a little insect which lives in the ear, called *chiseyene lipikusile*, which tells the person what is said to him, the wax in the ear being its excrement. The pupil is called *musanache jua liso*, the child of the eye. [825]

22. Among women, the uterus is called *nameso* (*meso* = eyes); it is supposed to be a little person who holds the foetus. When the child is born, *nameso* cannot find it and starts looking about, the movements causing the afterpains.

23. A man making his first journey to the coast used to sprinkle himself with water from every stream he crossed to give him a safe journey. In the same way, women at the present day going between Zomba and Blantyre sprinkle their babies with water from each stream. [484]

24. An ant-like insect called *ndupotumba* (*tumbutumba*, Chin.) [*dasylabris mephistis*] is lucky. On seeing it a native pats its belly and then rubs his own, wishing for plenty of food that day. If he is embarking on a journey or beginning some enterprise, he will wrap one of these insects in a fold of his loin cloth and take it with him for luck. [825]

25. When a native hears the *mwipe* bird call (its call is like the mew of a cat), if he wants something, he immediately says, "Oh *mwipe*, I want so-and-so. Be quiet and I will then be quiet, too!" If the bird ceases calling, he knows the wish will be granted. The female bird is said to be the more certain prophet.

26. The snake, *nalulukuti*, which lives in trees and is of a buff clay color with green markings, is said by natives to pierce the chest and tie a knot in itself on each side so that it can only be withdrawn by cutting off one knot. When the snake is thus withdrawn, its blood mixes with that of the man and he will die.

27. Natives have a habit of marking the spot where any event takes place by a stone by the side of the path, and every passer-by will add a stone for luck. In this way some large piles of stones have been made. [777]

28. A man resting on his way home from a long journey places a stone in the fork between the branches of a nearby tree, so that on his arrival he may find his wife has put by some food for him and has not used up the day's stock of flour.

29. A chameleon found digging in the path is said to presage the death of the finder's nearest relative. [787]

769 A man leaving his village on some expedition and wishing to be assured of safe conduct
● 484 will procure some millet flour. Going quietly into his house, he squats down in one corner
787 and gently sifts the flour through his hand so that it falls on the floor in the form of a little
cone, repeating as he does so, his prayer for safe conduct beginning and ending with the
word *chonde!* please!

[539] *"Chonde! chonde! wa-ku-mulungu ombuje mlanguaye maso pangu nilicone*
"Please, please! those at above ancestor clear eyes mine that I may see
litala, ngwiche 'chenene kunguja, chonde! chonde! chococonde!"
the path, may I arrive well where I go, please, please, please!"

He then covers the cone of flour with a basket. On the morrow, he will uncover it to see what has happened. According as the cone has remained intact or has fallen to one side or the other, the omen indicates whether or not the journey should be undertaken, the reaction being caused by the spirits to whom his supplication was addressed.

✓769 Again, there may have occurred much sickness in a village and the people conclude that the pest has come to remind them that they have not been attentive to their deceased chief. "His grave-house in the village has been allowed to fall into decay," and so on. They will decide that his spirit must be propitiated. The grave-house is rebuilt, a pot is sunk in the ground, and beer is poured in, and round about heaps of flour are placed. Prayer is made to the chief at whose grave they are worshipping, supplicating him in person and "all others who are with you at *Mlungu*," asking that he will no longer cause ill to befall the village.

When a village is moved, the beer-pot from the grave of the old chief is taken to the new village and a ceremony similar to that just described takes place, with the prayer that he will come to the new village and continue to exercise his benevolent care over its people.

✓731 In 1880 when there was a threatened famine on account of long drought in Zomba dis-
769 trict, Malemya decided that supplication for rain must be made to the spirits of his illustrious predecessors. Kasonga, one of Malemya's wise men, acted as high priest. A large amount of beer was brewed and the night before the ceremony, twenty sheep and fifty goats were slaughtered. Plates of the meat, of rice and porridge were then placed on the ground round the grave-house of the old Malemya, and pots of beer set into the ground at intervals. At the head of the grave, little heaps of *mbepesi* flour were arranged. This flour had been prepared by such of Malemya's wives as were not near a menstrual period. The following morning, a fence was built round the grave, outside which all the people collected, while beyond them again was a second fence. Kasonga, accompanied by an assistant then appeared, and amid absolute silence entered the inner enclosure. He addressed to the old Malemya, at whose grave they were all assembled, a prayer for rain. He then repeated the prayer, invoking the aid of all the past line of chiefs down to the reigning Malemya, re-
[516] peating their names. Returning to the outer enclosure, he again uttered the prayers, all the assembled multitude repeating them after him while lying face down, resting on their

3: Stannus D-5 (ca. 1912) 1922 FT7 Yao FT7

Women stick on a small spit a pretty green and white beetle, one of the *Cetoniidae*. The free end of the spit is then held between the teeth. At different positions on the stick, the buzzing of the impaled insect gives rise to different notes. The beetle is named *chingmungwengu* or *chiwuwuwu* (*nangalire*, Chin.). The wing-covers of another beetle, *matochetache*, a *Lamellicorn*, are used by women for the making of a musical instrument. The wing-covers of some twenty of these insects are threaded on a string arranged round the shoulders and feet of the player as she sits on the ground. The string on each side, as it passes from the shoulder to the foot of the same side, is plucked by the fingers of the opposite hand, different notes being obtained by different degrees of tension put on the string by pressure with the feet. The wing-covers give a buzzing quality to the notes which all natives like. 534 237

Mention should also be made of the horn, *lipenga*, commonly made of a long piece of reed or bamboo with a trumpet-shaped end, made out of a portion of a gourd. Antelope horns are also used. The horn is blown on journeys. [484]

Dancing. Dancing among the Yao, as among many other peoples, is the outcome of the pleasure experienced in rhythmical movements. The first accompaniment was probably the clapping of hands to mark time, followed by some exclamatory sounds more or less prolonged and occurring at regular intervals. Later, there was probably some refrain and, later still, drums were added to mark time, and songs formed an additional accompaniment. I believe that, here, dancing has always been an expression of pleasure and happiness and has been secondarily introduced at many ceremonies. In the majority of cases, such ceremonies were occasions of joy, the only exception being at funerals, but there I think their introduction was rather as a means of passing the time and avoiding silent brooding than as any real part of the rite. 535

The names given to various dances indicate their time or rhythm, and are, therefore, comparable to our own words, waltz, two-step, etc. There may be a number of airs for each time, and many sets of words to each air. The time may be given by clapping only, or by the addition of drums. Anyone acquainted with these dances, hearing drumming in the distance, can at once recognise the dance that is going on.

The drums which are used at dances (Pl. XXII), are made of a hollowed-out log of wood with a skin tambour stretched over the mouth of the drum and fixed by wooden pegs. On the tambour is smeared a layer of beeswax. The tambour is tightened by warming over a fire, so that the correct note is obtained; a fire is always kept burning close to the spot where drums are being played. 534 535

Likuti: a drum shaped somewhat like a native flour mortar, three to six feet high with the tambour one to two feet in diameter. The drum usually lies on the ground, the player sitting on the barrel of the drum, or he may have it suspended from him by a cord, the body of the drum dragging on the ground between his legs. It is played with both hands and gives a deep, resonant note, "*ti, ti, tii*" (Pl. XXII, figs. 12, 15). 534

4: Stannus D-5 (ca. 1909) 1910 FT7 Yao FT7
Marovi FR4

Gaga, the residue after pounding maize, is eaten by the women. No oils are used in cooking, but of fat and suet any native is very fond. Meat may be dried and smoked if in large quantity: flesh, fish and fowl is commonly roasted on spits; small pieces of chicken may be made into a kind of stew with beans and eaten as the relish. When on a journey the fire is commonly made against a tree. The cooking vessels are cleaned before use, not after. The fried fish eaten is often partly decomposed, and meat which is very high, even with maggots, is cooked and eaten, maggots and all. M Y 262 [252] [251] [484] [264]

Taboo.—Bushbuck is not eaten by many natives, as they say it feeds near graveyards. Fowls are not eaten by some, as this diet causes them to vomit; a snake-catcher never eats vegetables, and at the same time puts medicine on his hands. Many abstain from the flesh of certain animals as certain skin diseases are said to be caused thereby; all such diseases bear the name *wokwenga*. M Y [753]

A man who loses a relation by drowning takes an oath that he will never again eat fish, and never drink water from such lake, river, etc. Here the idea is of course simply to avoid eating part of the relation.

A Nyanja and Machinga will not eat the flesh of the hippopotamus, because on the body they say there are the marks of a string round the loins and of a mat on his back, adding that long ago he was a man. Animals of prey would never under any circumstances be eaten. Milk used never to be drunk by an adult, as it was said to cause a man to become as a child. A man would not dare to drink woman's milk as it was said he would surely die of dysentery. M [825] M [272]

Tobacco, etc.—The smoking of tobacco was a custom introduced from the coast. Chewing was general among Machinga and Yao men and women, while the Angoni and Mañanja snuffed. With the tobacco a little lime, made by burning shells, was taken in the mouth. Giddiness and sleepy sensations were experienced after chewing. The Nyasa and Awisa smoke a hubble-bubble, the water vessel being a large sausage-shaped gourd with a reed stem supporting a large bowl of *mbabwa* wood, sometimes very nicely carved (Plate XXVII, Figs. 5 and 7). The Amyanja smokes a pipe with the bowl made of clay and the stem of bamboo (Plate XXVII, Fig. 6); these are made by the women. Tobacco is grown in nearly every village, a large-leaved rather coarse variety; it is sun-dried and rolled up into hollow rings 6 inches in diameter and 3 inches broad. For snuff (*Fadia womuna*) the sun-dried tobacco is further dried over a fire on a pan, when cold it is ground on a stone with a smaller stone by the women, and with it is mixed some ashes of the *ngoa* fig-tree. M Y 276 [177]

At Blantyre I obtained a water-pipe made of bamboo stem; this was the water reservoir; a stem of reed supports a little clay bowl. The mouth is placed over the upper end of the bamboo. Bhang (*cannabis indica*) is smoked in a pipe of this kind.

AGRICULTURE.

The people live by cultivating the soil. Both sexes help in hoeing and planting, the collecting of the crops being mostly done by women. The hoe is the M Y 241

8:Mitchell E-5 (1946-1947) 1949
FT7 Yao FT7
[P. 141 C]

through one or other incumbent of the position of village headman.[4] Succession to posts of authority, including that of the chief, is matrilineal. Ideally the succession should pass to the first-born son of a man's eldest sister, but this is not always followed, for the personal qualities of the successor are most important.

The total African population of the area studied is 65,000. There are one or two Indian traders and two Europeans permanently resident in the area. One European is a missionary in the north-east corner and the other an Agricultural officer in the north centre of the area. Part of the area is administered by the District Commissioner, Zomba, and part by District Commissioner, Fort Johnston, and these officers tour the districts under their jurisdiction. Occasionally other White officials and labour recruiters appear, but in the main, Whites are not often seen in this area. The one road traversing it is usually impassable for a part of the rainy season.

vomited human flesh.[1] They said that they had a strong headman and that they could trust him; he was a good headman without witchcraft. If he had been a sorcerer they would have kept scolding him until the next morning.

About two hours after sunrise the people gathered and started dancing. At about this time Cimombo was brought out of the hut and put in the grass shed which had been built for the occasion. This was the climax of the ceremony.[2] He sat on a chair in the grass shed with one of his two wives on either side. Makoka then started a chant, exhorting the visitors to come to throw pennies at Cimombo's feet. Some of the people there made speeches about the type of behaviour they would expect from him. Then Nyambi arrived from the court village in a ricksha. When the noise had subsided he told the people that if they disobeyed Cimombo it meant that they disobeyed the chief. He emphasized the importance of the rank of the new headman. After the speech he presented 12*s.* to Cimombo which was received on his behalf by Ncimbo. Nyambi then left and the ceremony was over, but the people remained to dance and drink beer.

This description of the procedure following the 'coming out of the hut' is somewhat sketchy. The interaction of the headman and his villagers on this formal and ceremonial occasion is of great interest and importance. During the entire ceremony the headman adopes the pose which is appropriate for any Yao initiand. His hands are on his lap or on the arms of the chair and his head is bowed forward with eyes downcast. He neither speaks nor moves. His attendants, when necessary, wipe the sweat off his face or chase away the flies. The other occupants of the mat, who may be his wives, and sometimes his heir, adopt similar postures. In contrast to this, is the behaviour of the villagers who run about shouting wildly, the men discharging muzzle-loading guns, and women ululating in the typical Central African way.

Before the new headman comes out of the hut his mentors

[1] This is a test based on the witchlore of the Yao, who believe that sorcerers kill relatives with magic and then share out the flesh of their victims with fellow sorcerers in ghoulish feasts.

[2] Called the 'coming out from the hut' (*kukupoka nyumba*). It is of course the first public appearance of the headman in his newly assumed status.

8:Mitchell E-5 (1946-1947) 1949 FT7 Yao FT7
[P.155C]

647
493

* A "gamma" was a one-wheeled conveyance in which an Administrator or chief was wheeled around while on tours. Nowadays gammas are hardly ever used and the men who used to be employed to push them are used mainly as messengers.

two feet high and fifteen inches in diameter, hollowed out from above for about two-thirds of its length. Many are made with a kind of base or stand, and some have roughly carved heads on the outside; these are called "the lionesses," doubtless entertained of women, a large part of whose life is spent in preparing flour (Pl. XV, fig. 10).

The fire-stick. Matches are becoming more widespread year by year and soon the knowledge of how to make fire with a fire drill will be lost. The method employed among the Yao is as follows: a flat surface is cut on a piece of partly rotted wood. In the middle of this a small depression is made, and on one side of the piece of wood a groove is cut leading from the flat cut surface. The piece of wood is held firmly on the ground by one person with a piece of old scorched cloth or some shaved sticks at the base of the groove. A second person, by rolling a stick of hard wood rapidly between his hands with the point directed against the depression on the flat surface in which a little wood has been placed, drills a hole into it. The heat developed is sufficient to cause the powdered rotten wood to start smouldering. This is then turned out on the cloth, which is gently waved in the air till it catches fire (Pl. XV, fig. 11).

Boats. With the exception of a small coracle-like vessel, *kiwinyau*, made of rough bark and used for crossing streams, the Yao have no boats. The dug-out canoes which they use at the present day are made for them by the Anyanja. In addition to the bark boat, they use a kind of raft made from the pith tree, *bangwa*.

Tobacco. The use of tobacco in some form is universal among the tribes of Nyasaland and the Yao are no exception. The method of use varies among the different peoples; smoking, chewing, and snuffing are all practised, but while the Anyanja is essentially a pipe-smoker, the Yao takes snuff, although I think only lately he has also taken up smoking and chewing. A short time ago, a Yao who chewed would have been laughed at. The Anyanja do not chew but take snuff to a certain extent; the Angoni who do not smoke or chew are inveterate snuff-takers; the *Atumbuka*, *Atonga*, *Awanga*, and *Ankonde* are pipe-smokers and in lesser degree snuff-takers.

Tobacco is called *usua* (John. Chin.). It is prepared by sun-curing the leaf, which is then rolled up into a twist and allowed to dry further. The common tobacco pipe consists of a clay bowl, often ornamented, and a reed stem; it was formerly called *ikilanga*, but is now known as *kalio* (Pl. XV, fig. 11). For hemp, *chamba*, the Yao use a water pipe called *ukonde* (*upondo*, Chin.); this consists of a bamboo water container from which projects a reed stem surmounted by a clay bowl (Pl. XV, fig. 12). The word *ukonde* is also used for a tobacco pipe.

When tobacco is chewed, a little lime paste *ucukule* made from small shells is put in the mouth "to bring out the flavor," a small clay jar being used to carry the *ucukule*.

Both the Wayao and the Anyanja prepare snuff by grinding the broken-up tobacco leaves with a stone in a potsherd; the powder is then turned out into another sherd and warmed over a fire. A few drops of a preparation called *mapuli* is added for flavor. *Mapuli* is

4: Stanner D-5 (ca. 1909) 1910 FT? Yao FT?
March: FR?

Metallurgy.

Among the natives in Nyasaland, with the exception of copper in the north (Wahenga) and brass in parts near the Zambezi, iron was the only metal worked. M Y 225

Other metals now used and obtained from traders are, copper, brass, lead, tin, etc. Iron *ne chikondo*; brass *ne napeli*; copper *ne mkuwa*; of iron, hoes, axes, knives, spears were made.

At the present time copper- and brass-headed spears are still found at the north end of the lake; copper bracelets and body rings also. The brass wire bracelets elsewhere are made from imported metal. Iron-stone ore in the old days was smelted in a furnace of stones made in the form of a long drain 3 feet long and 1 foot high; in this a mixture of lumps of ore and wood charcoal was put, and single bellows of goats' skins were used to make the draught, which is aided by building a chimney at one end; at the other end a hole is made in the ground to receive the molten metal. A quantity of this is then again melted in a hole in the ground with a charcoal fire about it, and then the metal run into a trench to form a thin bar which is then hammered and worked into a spear, etc. At the present time little smelting of ore is done. There are regular metal-workers, who make knives, etc., using a little hearth with goat-skin bellows, a crucible for copper and brass, etc., tongs, pliers, hammer. M Y 226 M Y [20]

FIG. 15.

An iron plate with an aperture for drawing wire and files are also employed.

Bellows.—A goat's skin with a large opening sews to two sticks; the bag is then held by these sticks and closed and pressed, the air being driven out through an iron tube inserted through one of the legs of the skin.

Boats.

The only form of boat in use is the dug-out canoe without outrigger. No skins are used. These are punted along by bamboo poles in the rivers. On the lake paddles are used, never oars. There are no sailing craft. The sequoia is the tree used for making canoes, sometimes also the mbawa. They are cut out with a small adze, *mwapa*. The *chee* hook is used for caulking, twenty or thirty of the sticks being caulked into the hole. *Mpine*, a ground-creeper, is also used after being pounded. For baling anything is used. At Likoma a vessel like a very small canoe called *ngo* is employed. A kind of raft made from pith-wood and called *mapondwe* is used to fish from. Occasionally these get washed out into the lake and the fisher has been drowned. M Y 501 M Y 501 M Y 501

The canoes vary in size from 10 to 50 feet and more, the smaller being used as ferry-boats across a stream; the largest were made to carry slaves across the Lake Nyasa in the old days. In punting a canoe, one or two men work, keeping time. In paddling, any number may work, the largest canoes have twenty men working on either side. Down river near Zambezi the paddlers kneel; on the Lake they stand.

4: Stanner D-5 (ca. 1909)1910 FT7 Yao FT7
Moravi F84

When a number are working they take time from the front man, the rear man starting with his ordinary paddle. The passengers sit in the middle, a chief towards the stern. They never lose sight of land even in crossing the widest part of the lake. Canoes are now used occasionally as anchors on the lake, canoes are made to shelter canoes. The smaller canoes are 2 feet to 2½ feet high, the very large ones used to be 4 and 5 feet high; except on the lower river, where canoes have made similarly shaped, they are made with a bow more pointed than the stern and having a beak (Fig. 18). There is no ornamentation and no figure heads.

In every lake-shore or river-side village or collection of huts will be found one or more canoes; these belong to some one man, others using them paying a fee. At the launching of a new canoe, beer is made and the women dance, and medicine is made for its safe journey.

SWIMMING.

Not even all lake-shore native swim, though most do. The art is learnt in childhood and not taught. They are not very fast swimmers, and I do not think could swim very far. They sometimes dive head first and practise staying under water. They swim rather like a dog, both arms coming a little out of water, but not a trudgeon stroke; arms are kept straight. They sometimes swim on the side, but never use the ordinary breast stroke.

GAMES.

Several games are played resembling the game of *ohwe* introduced from Zanzibar (Mancala); *ohwe* is played on a board in which rows of holes have been cut; beans are used as counters.

Mikombwe.—A game found among Anyanja and Machinga; it may be played on a *ohwe* board, but is often played in holes made in the ground with stones. The *Angoni* game *chipalapalo* is played in the same way. At Fort Anderson is a lump of stone in which hollows have been made similar to those made in the ground. It is the only piece of stone-work I know in the country. Children and women play knucklebones (*mdodo*.)

A man tries in one breath to keep saying *mbiri-biri-biri* . . . . while another makes a pile of stones from another pile of ten, taking one at a time, saying, "To take and put it there makes one," etc. Men play at guessing in which hand an object is hidden, or one out of ten men sitting in a house has to guess with whom a certain object is. No forfeits.

Tendwada (=the spider) is cat's cradle.

Fisi (hide and seek), one hiding, five or six seeking.

There are no dice games. Cards were introduced from the coast before the advent of Europeans into the country; the games are various and difficult to follow.

A slip-shod kind of wrestling is practised by Anyanja youths; the Machinga

2: Mitchell E-5 (1946-1949) 1956 FT7 Yao FT7

calico currency was an impossibility.'[1] The Africans could hardly have resisted the change over to a money economy. The taxation system introduced in 1893 was based on the Governor of Zululand's Proclamation III of 1887, and ruled that a tax defaulter was liable to be conscripted for labour until he had earned the amount of his tax. Coffee estates owned by Whites in the Highlands were at the same time in need of labour.[2] Tax was then taken in kind but it was soon changed to cash as a further inducement to Africans to come on to the labour market. The Africans were forced into the cash economy of the Protectorate even if they were unwilling. The measures were so successful that in 1899 the *Gazette* announced that the labour market in Blantyre was flooded.[3]

Modern Economic Structure

In modern Nyasaland, the wants of the Africans have become even more varied than they were in the earlier days. Most younger men wear European-type clothing and shoes. Many own bicycles and sewing machines. Many houses have glass windows and panelled doors and most of them are furnished with some rough furniture which has been bought from local craftsmen. Many have beds and mosquito nets. Few women cannot boast of enamel dishes to replace their clay pottery or china cups to replace drinking gourds. The food habits of the peoples too have broadened. Most households use sugar these days, and many people drink tea. I should say that all households occasionally buy soap. Certainly all need salt, which formerly was burnt from the saline grass around Lake Shirwa or dissolved out of special soils in Portuguese East Africa. The stock-lists of an Indian-owned village shop in Chiwalo's area and of an African-owned canteen in the same area, which I have set out in Appendix A, indicate the range of the wants of the modern African.

It is clear that these wants are over and above food requirements. The people in these tribal areas live primarily on the

[1] *Report of the Consul and Acting Commissioner Sharpe on the Trade and General Condition of the British Central African Protectorate for April 1896 to March 1897.* C. 8258.

[2] See the *B.C.A. Gazette*, iii, 3 (March 1895), and iii, 17 (Sept. 15th, 1896), which prize advertisements offering 'native labour arranged for and supplied to plantations at a commission of 7s. 6d. a head'.

[3] *B.C.A. Gazette*, vi, 6 (June 24th, 1899).

4: Stanner D-5 (ca. 1909) 1919 FT7 Yao FT7 Marsh F84

case sound might be administered; if adjudged guilty the accused would be burned on a pile of wood.

Evidence is given without taking any oath; a false witness is not punished.

Justice is summarily summary. At Mponda's, after conviction of adultery with one of the chief's wives, a man's throat was cut on the spot. Drowning was the usual punishment with Mponda.

Punishments for all offences practically consist payment.

Greetings, Salutations, etc.

The correct salutation among Machinga Yao and Mahanja on meeting is clapping the hands, the hands in front of and at right angles to the body parallel to each other, thumbs against the fingers. The clapping should be continued for ten minutes after having passed; after passing a chief it should be continued for half-an-hour.

Another form consists in slowly beating the breast with the right hand, the head slightly inclined forward. The lower in station make salutation first to the higher; a man to a chief, a woman to a man; exception is made in the case of an old woman, who is saluted by the man. Scattered all over the country a raising of one or both arms is a common form of salutation, but is probably only a corruption of the military salute.

Slapping of the arms or thigh with the right hand is also seen, among old men usually. In imploring mercy from, or on the first occasion of meeting, the chief, a man lies prone on the ground and catching the foot of the chief, puts it on his neck—a sign of absolute submission. Women kneel at the approach of a man. Words and expressions of salutation are few—*Moyo* (=heart) being the only old expression used. Now commonly one hears a word (sounding like *salut*) probably a corruption of good morning, and the Swahili greeting *Salaam* with the double hand-shake of Mohammedans.

A man returned to his village after an absence some awhile, then his wife comes to him and kneeling grasps him, weeps, her husband returning weeps.

Years ago, a man of any importance was received with firing of guns and shouting. A headman is received now with *Mwapulele*, the women wobbling their tongues in their mouths. Ashes are put on the head as a sign of joy.

In the morning the husband and wife do not greet each other, but in the village friends "give each other good morning" (=*Moyo*). On waking in the morning, a woman cracks all her joints (=*Kulim chala*). She then massages her husband and cracks the joints of his fingers.

One man wishing to see another goes to his house, and squatting outside the door cries "*Ndo!*" three times (=there), at the same time clapping his hands. If no answer be given he goes away, even though he knows the man is within, no answer meaning that the inmate does not wish to be seen. If invited to enter he does so, the man of the house rises and gives him salutation. He makes small

1: Tew E-4 (no date) 1950 FT7 Yao FT7

BIRTH

Birth takes place in the bush, some distance from the hamlet, in the presence of female relatives of the woman and of her husband. If the child is stillborn, or miscarried, it is buried in the bush. The husband and wife must abstain from sexual intercourse for some months, until a special ritual intercourse is performed. A man who breaks this taboo is liable to contract a fatal disease, *kwanaga*. Difficult births are attributed to: (*a*) a curse spoken by a matrilineal relative—this is made effective by the intervention of the ancestors, and to remove it it is necessary to perform a rite making clear that no malice is borne; (*b*) the adultery of the woman or her husband, in which case confession will save the woman from dying; and (*c*) sorcery. 844 [845] 845

If a child is born alive it is brought to the hut of the mother or one of her female relatives, where it is secluded until its naming ceremony, about six days later. Only after the naming is the child considered to be a member of society. A second child should not be born while the first is still suckling, i.e. for about two years. When the child is about four or five months old it is ritually immunized against the dangers of sexual activity, and the parents may resume relations. Elaborate magical precautions are taken to ensure the child's survival. Children sleep with their mother, the boys until they are old enough to go to the boys' dormitory, and the girls until marriage.[1] 844 852 [513]

INITIATION

The yearly initiation ceremonies, *unyago*, are the principal cultural institution of the Yao. That for the boys, *lupanda*, is the most important, and may only take place under a chief or superior village headman, whereas a girls' initiation ceremony may take place under an ordinary headman. The right to hold a boys' initiation ceremony therefore becomes a mark of status which is jealously disputed.[2] The right is expressed as 'having a *cisela*'. A *cisela* is the small basket in which the special sacrificial flour is carried. 881 852 [554]

Yao carry out initiation between the ages of seven and eleven, whereas generally in East Africa it is postponed until puberty.[3] In response to requests from the headmen the chief appoints the time and place of the boys' initiation ceremony for a group of villages. It is held at the end of the dry season, before the bush is burned. Each initiate is accompanied by a sponsor, *nkwanzi*, who may be a brother, uncle, or friend. Before they set out for the place appointed to be *lupanda*, they all assemble before the chief to be anointed with millet-flour specially prepared by his head wife. The word *lupanda* refers to a forked stick over which the sacrificial flour is poured. This stick is planted at the place of assembly, the *masakasa*. The boys, their sponsors, and the master of ceremonies, *m'nkiwa*, are accompanied with dancing as far as *masakasa* by their friends. The next day the initiates go to a spot in the bush, where the circumcision (formerly only an incision) is performed, and remain in the bush school, *ndagala*, for about two months, until the wounds are completely healed. The Yao circumcision rite is said not to have been introduced by the Arabs.[4]

During these weeks the boys are subjected to rigorous discipline and instructed in various skills and tribal lore. They sleep in long dormitory huts, with partitions dividing the boys of different villages from each other. The chief appoints the day for

[1] Wanson, 1906, pp. 144–5.
[2] Stannard and Dorsey, 1903, p. 119.
[3] Duff, 1903, p. 310.
[4] Livingstone, 1874, p. 81.

2: Mitchell E-5 (1946-1949) 1956 FT7 Yao FT7

593 brother, is called *asyene mbumba*, or 'the warden of the sorority-group'. As one would expect among a matrilineal people, the link between a man and his mother and sisters is strong. But it is the link with his sister that is strongest. She relies on him for protection, particularly when she becomes ill, but also in her [582] relationships with her husband. Her brother will be her junior marriage surety, and he will give the consent which will allow a man to marry her. Also a woman's brother will have to consult [731] the diviner and find the medicines when she or her children sicken. In times of distress, as, for example, if her crops have failed, she will appeal to her brother for help. Similarly the man is dependent on his sister in a number of subtle ways. He can always rely on her for hospitality, and is able to get a meal from her if he needs it. But his dependence on his sisters for prestige is much more important. The significance of this will emerge when we see the *mbumba* organization in the light of the segmentation and fission of the lineage. A man can only found a new village if he has the full support of his sisters. A sister also plays a most important rôle at the birth of his children. She represents him both at the first fœtal-quickening ceremony and at the birth of his child, when she listens to the birth-pang confessions of his wife.[1]

At the same time the relations of sister and brother are restricted by custom. A man must never appear too familiar with his sister, especially in sexual matters. He may not, for example, [513] sleep in the same hut as she does; if she is away and he sleeps in her empty hut he must not make his bed in the place where she usually sleeps. He may not even sit on her sleeping mat. [835] Authentic cases of incest with a sister are extremely rare, whereas I recorded three or four cases of father-daughter incest while I was in the field. Supposed cases of brother-sister incest are recounted and discussed widely. This is understandable because [754] a man who is suspiciously familiar with his sister is suspected of being a sorcerer, since it is widely believed that a sorcerer usually obtains the power that he needs for the performance of his dire deeds by sleeping with his sister. The riddle of the initiands—'What is the sweetest fruit which may not be tasted?' Answer, 'Your sister'—neatly reflects the attitude of the Yao.

The close link of brother and sister is also reflected in the

[1] The significance of this is explained in Chap. VII, p. 185.

3:Stanmus D-5 (ca. 1912) 1922 FT7 Yao FT7

539

40. *Gwaru kwale ntukuta!*
Lying on the rock, heat!

This is a slang expression which in full would read, "It is nice and warm lying on a rock in the sun, but it is not so comfortable as being in bed in company with your wife; you can go on waiting but you won't get anything." This might even be said to a dog, watching as a dog will, every morsel of food lifted to its master's mouth.

41. *Kubapilila mwai pa nkina!*
To have hopes of water for maggots!

It is a custom before lying down to sleep on the floor mat, to take it up and pour boiling water on the earth floor to kill any blood-sucking maggots (Congo floor-maggot, *Auchenorrynchia*). If you see a pot cooking on the fire, you naturally think there is food being prepared but you may be disappointed; it may only be the pot for heating the water to kill the maggots. The saying is thus used to a man who has made an assignation and is disappointed but goes on waiting. [513] [751]

42. *Kuluma ngwa!*
To bite cockroach-like!

The cockroach is described by natives as going up to what it will eat, remaining quiet for some moments, and then suddenly taking a bite. This is said of a man who comes up to you smiling and then hits you a hard blow. [825]

Among the Yao as among other tribes that I have previously mentioned,[1] signs of salutation to a superior are made by clapping the hands or patting the breast or buttock with one hand, at the same time crouching down. A woman will go off the path and kneel, looking away from a superior passing along the roadway. 576

A person going by the door of a hut where others are sitting, will say "*Kwimanga bana!* At the door here." Passing behind anyone, he will say "*Ku-nyu ^mwai!* At the back!" Meeting anyone on a path, a man will simply say, "*Icho*, here," adding perhaps, "*Ku-ikala!* all is well!" A chief or headman on returning to his village after a journey, is greeted by the women with trilling of the tongue (*Ku-lulula*). [201]

Man and wife do not greet each other in the morning. The wife rises first and draws water and places it in the hut for the husband's use but nothing may be said.

When a visitor is entertained and a chicken cooked for a repast, the "pope's nose" is always for the visitor. The right hand only is used in dipping into the common pot. A man of small importance, though replete, will go on making pretence of eating at a common meal by taking very small amounts so that his superior shall finish first, and rise and go away before him.

I may here add the words used by the Yao for the sounds made by various animals; they are interesting to compare with those of other languages: 192

[1] 'Notes on some tribes of British Central Africa,' op. cit., p. [illegible]

881 The evening of the first day is called *lyuwa lya mahunemi*, or "the day of singing," as singing is kept up far into the night, but the exact significance of the word *khunemi* I have been unable to find out.

[515] The second day is spoken of as *lyuwa lya mamawa*, "the day of washing of hands," (*kumawa*, "to wash the hands") when the *wali* are specially instructed as to the necessities of washing hands before preparing food, etc.; precept is followed by practice. The night is spent quietly; for this day's proceedings few people probably will have remained.

On the third day, however, they come back again from their villages in crowds to witness the performance of *usuma*, *lyuwa lya usuma*, "the day of house moving" (*kusuma*, "to change one's abode, carrying goods and chattels with one"). A representation is given of an onslaught on a village by enemies and all pretend to run away carrying their worldly goods with them. The part of the attackers is played by a number of women who, armed with guns and having donned belts and powder horns, rush in on the crowd from the bush and make prisoners of all they can catch. The men are put in miniature slave-sticks; women who are seen trying to run off with a child on the back, one round the neck and one on each hip, are driven as prisoners into a group. When all the noise and fun are over, the prisoners are released. This is often followed by a mock trial. Two women dressed up to impersonate chiefs of rival tribes, argue an old, imaginary quarrel, usually pretending that there has been a raid by one party on an ivory caravan going to the coast, with stealing of the ivory, while the other party in revenge has caught and killed some of the people belonging to the first mentioned. The thing may be kept up for an hour with much talking and great zest, all those taking part being women. Finally each party agrees to give compensation for the damage done; each presents the other with bundles of sugar cane, and friendship is reestablished. That night, everyone again rests quietly.

The fourth day is known as *lyuwa lya kuzyunga* (*kuzyunga*, "to go round about," referring to the dancing which goes on). Dancing takes place during the day and also the ceremony of *Lukwi* to be referred to later. One of the favorite songs sung this day runs as follows:

[533 539] "*Ndambe'ji nkambe'ponje ninde nnuma nkonyuw'ye, ennu! ambunnje upenjinnu!*"
"(Took this) a present don't give me free wait for me little girl, dear me! and we'll have some fun together!"

On the fifth day, return is made to the villages. The girl *wali* attended constantly by their *ahumwi* then live together for the period of instruction in huts in a special enclosure in the chief's village or in similar enclosures in a number of villages. The *wali* may go out into the village but must go about with bowed head and look no man in the face; they wear bark-cloth called *kiwile* and should they meet anyone, they must pull over their faces the [753] kind of hood with which their garments are provided. They may not share food with outsiders. If they did so, the latter would sicken with a disease called *chiwabela*.

4: Stannus D-5 (ca. 1909)1910 FT7 Yao FT7
Maravi FR4

M Y 252 M Y 264 spoon into a clean shallow basket or on to a plate. The *ndiwo* or relish, consisting of vegetables such as beans or a kind of spinach, a little fish or chicken, is cooked in a separate pot, and round these those about to eat collect. Washing their left hands in water, they take some of the porridge and making a sausage shape of it, dip it in the *ndiwo* and then cram it into their mouths.

M Y 217 258 Salt was obtained either from natural deposits or from "salt earth" on a stream bank near Fort Johnston, or from the ashes of burnt *bango* reeds or *machedza*; by a method of percolation through porous pots.

M Y 271 515 The native rather drinks between meals—water. After eating he may wash his mouth out and clean his teeth, using the frayed end of a piece of wood as a brush.

M Y 273 *Alcohol.*—With the exception of the people living on the lower river, who drink fermented palm juice,[1] beer is the common alcoholic beverage. Beer is made from maize (*chimanga*) or millet (*mapira*); the crop of the latter is very largely used for beer making; it makes the best beer and is certainly preferred by Angoni.

Gruel is prepared by boiling flour with water; after an hour leaven (*chimala*) is added fermentation sets in; and it may be drunk the next day; it is the sweet beer, *utiko* or *catondera*. On the second day it is again boiled and is allowed to cool; the third day more leaven is added (*chikutiko*); the fourth day fresh gruel is made, and the contents of the original pot, now called *nganga*, is added to it, making two pots of beer. It may be drank the same day while hot or allowed to cool and taken on the second day.

Food-stuffs.

M Y 262

1. Maize (*chimanga*), millet (*mapira, mawaere*), rice (*mpunga*).
2. Cassava—sweet potato.
3. Beans and peas of many varieties.
4. Pumpkins, cucumbers, melons (*dzungu, mkuka, chibwende*).
5. Many kinds of leaves growing wild—also pumpkin leaves, of which a kind of spinach is made.
6. Bananas (*paw-paw*), sugar cane and reeds are sucked.
7. White ants, locusts, honey.
8. M Y [177] Numbers of small animals are eaten by Chipeta, Angoni, etc. With the spread of Mohammedanism this is going out; rats, mice, hares, rock-rabbit, etc. Chipeta will eat dog, and I once saw one eat baboon. Frogs, shell-fish, snakes, crocodiles, crows, vultures, eagles, are never eaten.
9. Fish (*nsomba*), fresh or dried, is much eaten, thirteen varieties being enumerated.
10. Chickens, ducks, wild birds that they may snare.

[1] Spirits used to be made by distilling from beer and banana and palm-juice by means of a pot and a gun barrel.

2: Mitchell E-5 (1946-1949) 1956 FT7 Yao FT7

G95
342
516

PLATE IV

A dispute in settlement at Chiwalo's hut. The assessor is sitting under the veranda behind the pole. A village headman can just be discerned in the shade under the veranda. The commoners sit in the sun.

(October 1948)

[facing p.56]

2: Mitchell E-5 (1946-1949) 1956 FT7 Yao FT7

622
292
●516

PLATE V

Village headman, Nyenje, at his installation ceremony. He is not entitled to wear a scarlet headband but wears a coloured one instead. On his right sits his sister, on his left his wives, adopting the posture correct for an initiand—head bowed, eyes downcast, hands in the lap. A villager is dropping a penny into the cloth at the headman's feet while the headman's representative collects the pennies.

(July 1947)

[facing p.114]

2: Mitchell E-5 (1946-1949) 1956 FT7 Yao FT7

vomited human flesh.[1] They said that they had a strong headman and that they could trust him; he was a good headman without witchcraft. If he had been a sorcerer they would have kept scolding him until the next morning.

About two hours after sunrise the people gathered and started dancing. At about this time Cimombo was brought out of the hut and put in the grass shed which had been built for the occasion. This was the climax of the ceremony.[2] He sat on a chair in the grass shed with one of his two wives on either side. Makoka then started a chant, exhorting the visitors to come to throw pennies at Cimombo's feet. Some of the people there made speeches about the type of behaviour they would expect from him. Then Nyambi arrived from the court village in a ricksha. When the noise had subsided he told the people that if they disobeyed Cimombo it meant that they disobeyed the chief. He emphasized the importance of the rank of the new headman. After the speech he presented 12*s.* to Cimombo which was received on his behalf by Ncimbo. Nyambi then left and the ceremony was over, but the people remained to dance and drink beer.

This description of the procedure following the 'coming out of the hut' is somewhat sketchy. The interaction of the headman and his villagers on this formal and ceremonial occasion is of great interest and importance. During the entire ceremony the headman adopts the pose which is appropriate for any Yao initiand. His hands are on his lap or on the arms of the chair and his head is bowed forward with eyes downcast. He neither speaks nor moves. His attendants, when necessary, wipe the sweat off his face or chase away the flies. The other occupants of the mat, who may be his wives, and sometimes his heir, adopt similar postures. In contrast to this, is the behaviour of the villagers who run about shouting wildly, the men discharging muzzle-loading guns, and women ululating in the typical Central African way.

Before the new headman comes out of the hut his mentors

[1] This is a test based on the witchlore of the Yao, who believe that sorcerers kill relatives with magic and then share out the flesh of their victims with fellow sorcerers in ghoulish feasts.

[2] Called the 'coming out from the hut' (*kulupeka nyumba*). It is of course the first public appearance of the headman in his newly assumed status.

769 A man leaving his village on some expedition and wishing to be assured of safe conduct
484 will procure some millet flour. Going quietly into his house, he squats down in one corner
787 and gently sifts the flour through his hand so that it falls on the floor in the form of a little cone, repeating as he does so, his prayer for safe conduct beginning and ending with the word *chondo!* *please!*

[539] "*Chondo! chondo!* *wa-ka-mulungu* *mulungu* *wilungungu* *wuno* *gungu* *wilinuna*
"Please, please! those at above *ucumbe* *chiwe* *nyu* *nine* that I may see
kinda, *ugunda* *'chumwe kungugu,* *chondo! chondo! chonondo!"*
the path, may I arrive well where I go, please, please, please!"

He then covers the cone of flour with a basket. On the morrow, he will uncover it to see what has happened. According as the cone has remained intact or has fallen to one side or the other, the omen indicates whether or not the journey should be undertaken, the reaction being caused by the spirits to whom his supplication was addressed.

769 Again, there may have occurred much sickness in a village and the people conclude that the past has come to remind them that they have not been attentive to their deceased chief. "His grave-house in the village has been allowed to fall into decay," and so on. They will decide that his spirit must be propitiated. The grave-house is rebuilt, a pot is sunk in the ground, and beer is poured in, and round about heaps of flour are placed. Prayer is made to the chief at whose grave they are worshipping, supplicating him in person and "all others who are with you at *Mbunga,*" asking that he will no longer cause ill to befall the village.

When a village is moved, the beer-pot from the grave of the old chief is taken to the new village and a ceremony similar to that just described takes place, with the prayer that he will come to the new village and continue to exercise his benevolent care over its people.

731 In 1880 when there was a threatened famine on account of long drought in Zomba dis-
769 trict, Malenya decided that supplication for rain must be made to the spirits of his illustrious predecessors. Kawanga, one of Malenya's wise men, acted as high priest. A large amount of beer was brewed and the night before the ceremony, twenty sheep and fifty goats were slaughtered. Plates of the meat, of rice and porridge were then placed on the ground round the grave-house of the old Malenya, and pots of beer set into the ground at intervals. At the head of the grave, little heaps of millet flour were arranged. This flour had been prepared by each of Malenya's wives as were [illegible] over a menstrual period. The following morning, a fence was built round the grave, inside which all the people collected, while beyond them again was a second fence. Kawanga, accompanied by an assistant then appeared, and amid absolute silence entered the inner enclosure. He addressed to the old Malenya, at whose grave they were all assembled, a prayer for rain. He then repeated the prayer, invoking the aid of all the past line of chiefs down to the reigning Malenya, repeating their names. Returning to the outer enclosure, he again uttered the prayers, all
[514] the assembled multitude repeating them after him while lying [illegible], resting on their

3:Stannus D-5 (ca. 1912) 1922 FT? Yao FT?

516 knees and elbows, at intervals swaying their bodies from side to side and slapping their 751 hands. Kasunga then ordered all to go and bathe, men and women separately. As they 769 returned from the stream, rain began to fall.

Intercession on behalf of the sick may be made, especially by anyone who is likely to 755 be accused of causing the illness by witchcraft.[1] The man standing with arms outstretched, 769 downwards and a little in front of his body, the hands supine, takes some water in his mouth and discharges it in a stream on the ground, (probably as a sign of purification of his tongue), and then invoking "all the spirits above," asks that they will intercede to restore health to the sick man and bear witness to his own innocence of any wish to do the sick man injury. *Ku-pempe* is the word meaning to offer sacrifice and prayer.

Harvesting and hunting are occasions when sacrifices may be offered. It was formerly 769 the custom for the chief to determine the day on which harvesting of millet should begin. On the day appointed, a big drum was beaten in the village and word passed round; then 241 everyone would go down to his garden, gather a head of millet, and bring it back to the 782 village where it was all handed over to the chief's headwife. After drying and thumbing, a little of the grain was laid at the grave of an old chief by one of the reigning chief's advisers, the remainder being again distributed to all the people gathered together in the village meeting-place, who ate it raw. After this ceremony, harvesting began.

In passing through a millet garden, if a child asks his mother to give him some to eat, she plucks a bunch or two and reverently laying one at the foot of a *mawe* tree for the spirits or at the base of some other tree, if she cannot see a *mawe*, she gives the rest to the child.

When a hunting expedition makes its first killing, part of the flesh of the animal is laid 782 at the base of a tree as a thank offering to the spirits and in anticipation of further favors 224 to be conferred. All such offerings are supposed by the natives to be partaken of by the spirits, though they are well aware that they do not actually diminish in quantity. There is an interesting point in this connection: any man who has acted as *nbile* (undertaker) to some well-known man may appropriate these offerings. In the case of the hunting offering, he will run round the tree, saying, "I am a hyaena, the spirits will not mind me," and will then take part of the flesh-offering and eat it.

In the same way, a *nbile* may drink from a grave beer-pot after three days, when the spirits are supposed to have taken what they want.

With the exception of the *mawe* tree above mentioned (*ndima*, Chin.), and possibly 824 another called *nsilo-mpuma* (Chin.), which is never used as firewood and which is supposed 778 to be used by *mamai*, I do not think there are any sacred trees properly so-called. Miss Werner supposes that many of the big trees (often a species of *Ficus*) in villages are sacred.[2] The truth is, I believe, simply that a village is made naturally round a big tree which conveniently offers its shade for the village meeting place. The spirits of deceased chiefs may

[1] Vide supra, p. 300.

[2] The natives of British Central Africa, op. cit., p. 60.

3:Sianmuse D-5 (ca. 1912) 1922 FT? Tao FT?

535

Chindindo: the *chindindo* songs are the favourites among all the other people. They have been in late years partly replaced by others, but, at the present time, there is a tendency to return to them; they are staid in tone and the dance is sedate. *Chindindo* is always played at moonlight. While the whole company sits around in a circle with the drums at one side, a couple of people do the dancing in the middle. The drums used are a *chingonge*, two *ishoma*, and a *likati*. With the commencement of drumming, a man well known for his songs steps out into the middle and begins singing; he is followed by another man or maybe a woman who sings a second part; the two singers are generally people who have found that they sing well together. Two such people will be welcomed, and they may sing many songs, while any young upstarts who do not sing well together, will be given to understand that their performance does not meet with approval. People have their favourite songs, and there may be much heart-burning if an old man finds some one else singing a song that he considers especially his own. As they sing, they dance their peculiar shuffling steps. (The words of some of these songs are given later.)

Salupe: an Angoni dance sometimes danced by the Yao. It resembles *chindindo* in that all sit singing and clapping while, one at a time, men dance in the open space to time given by bamboo sticks knocked together. The songs are all hunting songs.

It is impossible to describe the steps used in all the dances; for each dance, they differ, of course, and except by a cinematograph film, they cannot be reproduced. The movements of the feet are ordinary stepping motions or patting of the ground with the feet, the actual movements being very small, so that in most cases it is impossible to devise any means of making out the steps. To enable them to perform these steps, they commonly dance with the knees bent, the buttocks protruded behind, and the back arched. In some cases, this attitude is extreme. [97]

There is a large series of dances which, to the uninitiated spectator, appear to resemble each other very closely. The general plan of the dance is as follows. The drums are placed in the middle; around them in a circle are the dancers and outside them, the onlookers. The circle may be thirty or forty strong, composed of men only or of men and women as the case may be. Commonly, the ring of dancers is divided into two halves, each half being headed by a leader who sings the song, all joining in the refrain, while the onlookers do the clapping. When the drums begin, they all walk round in a circle, but at a given signal, one of the drums gives out a new time, and the whole circle starts dancing with short, shuffling movements already described, usually progressing in the circle, sometimes going backwards, sometimes facing the drums or turning right around in the line.

M'mwanda is a dance of, I believe, recent introduction which has replaced to some extent *chindindo*, much to the disgust of the older people who dislike the innovation. They shake their heads and say, "*Chilondo chimwalile!*" "The world is finished." The drums used are *likati*, *ishpelipe*, *mokoto*, and *chingonge*. It is danced by men and females only. [77]

Ujende or, as it was known some years ago, *mpamboli*, is danced like *mwanda*, but the

N2
3r2
539
301
516

[illegible]

[illegible]

[End Plate 1]

Amusements. Among the natives of east central Africa, the chief form of amusement, apart from dancing, might be said to be sitting and chatting; it is interesting to note that there is a word to express "sitting up all night talking." Often the younger members of the community will gather about one of the older men and listen to his stories of travel or fighting in the old days, and some men gain quite a reputation as raconteurs. Or again riddle asking is indulged in to pass the time. Women and girls do not assist at these sittings. 521

Among the Tao youth, wrestling, *ku-kopana* (from *ku-kopa*, to try), is practised with a fixed grip and no leg-work; the victor always accentuates his victory by hitting the man who is down, and pummelling his face with his fist or a stone. 526

A ball game, played originally with a ball of native rubber from which it derives its name, *ungilo*, is a great favourite among boys. A dozen or more are divided into sides but all mixed up together. The ball is then thrown into the air to a member of the same side, any of the opposite side jumping into the air to try and catch it, accompanied by the clapping of hands to time.

"Hide-and-seek," *ahijanajawa*, and "touch," *ahaw ar ahaulele* (*ahijanai*, Chin.), are played by boys.

Chimuapo: toward the end of the ball game, when it is decided to finish, each boy as he catches the ball puts it to his nose to smell (*ku-uapa*, to smell). He is then "out." At the end of a game of "touch" played in the water, when one touches another, he jumps out of the water, puts his cloth up to his nose "to smell," and is then "out." His cloth may be thrown to him to "smell" while still in the water, after which he gets out without hurry. The object is not to be the last "in." I am unable to explain this custom.

Kanchi-kanen is played by girls, *nakale*, from "*chi*" the exclamation made when catching anything. 524

Mahandwe: the Board and Counter game is played in nearly every Tao village. Dr. Sandeman[1] has given a very complete account of a number of the games played by the several tribes in Nyassaland and I need add nothing to his explanation of the methods of playing.

Similar games are widespread throughout Africa and are well known on the West Coast under the same *mancala*. The several games are played, either simply with holes in the ground and small stones, or with a board and a kind of seed procured from Zanzibar. The board is called *mahandwe* and the pebbles or seeds or other convenient "counters" *ajimbwa*. Dr. Sandeman uses this word as the name of one of the games. The Angoni call the counters *mandie*. The holes in the board or in the ground (Pl. XXIII, fig. 11) are called *ipete* (sing. *ahipete*) from *ku-pata*, to strike, beat, or put down with a thud, to "plank down," and refers to the way the counters are "planked down" in the holes on the board when playing. The large receiver at the end of the board is simply to hold the counters out of play and is called *ngombe*, "the house," or *kinda*, "the hole." The counters are [17]

[1] Mansfield G. Sandeman, "Native games of Central Africa," (Trans. Anth. Inst., 1912, vol. 42, p. 78-106).

[illegible] Down of her married life begins. The man and woman live together peaceably enough as a rule, each attending to his own sphere of work. The man builds the house, the woman [illegible] mends the floors; she sweeps and works, she is the bearer of wood and drawer of water. The man hunts, fishes, makes mats, baskets, the grain store, game traps, and bark-cloth; he looks after the tobacco, and makes the snuff, while his wife brews the beer. He it is who fashions the gourd vessels and carves the spoons, while the women is the potter (Pl. III, 4) and pipe-maker. Together they hoe and together they harvest, but to the women falls the monotonous drudgery of pounding and sifting the corn for flour.

[illegible] The Vie have a custom like that of the Ovimbundu. A sister brings to the house of the newly wedded pair a log of green wood from a mbonge tree which is very hard; the log may be two feet in diameter and four feet long. Should the bride not become pregnant before it is burned away, the husband is laughed at and they may both be teased by having many logs brought to the house. A man who has no children is much despised and there is a saying, "He must have eaten some ground-nuts," pointing on the word for a black-skinned variety of ground-nut, ohinkumbu, a word which also means sterility. An impotent man may, with the consent of his wife, introduce some male friend into the house, any children born in consequence being claimed as the husband's. He usually chooses some friend from a distance to obviate any misfortunes springing up between him and the wife. Two married couples may, all consenting, exchange consorts for the night, but they never live together like this for long periods.

[illegible] There is one well-defined marriage taboo; a man may not marry a woman of his own clan. In the old days, he was also restricted to his own tribe, except in the case of slave wives and wives by capture. Since the clan is inherited from the mother,[illegible] a man may not marry the daughters of his maternal aunts, but he may marry his other female cousins. He may not marry two sisters nor a deceased wife's sister; neither do two brothers marry two sisters.

[illegible] The number of wives is limited only by the husband's ability to provide for them. In addition to free wives, a man might formerly have a number of slave wives. The head wife is called kapuko, the other wives, mnyanako. The word given by Mackenzie, ohuapuko,[illegible] meaning the junior wives, is a Chinyanja word and, I think, wrongly applied.

[illegible] It has been said that a man always marries into the village of his wife. For this reason, female children are always prized as it means an increase in the number of slave-bodied men added to the village. In rare cases, the wife might be taken to the husband's village, as in the Ovimbundu practice.[illegible] This, of course, is true in the case of chiefs and headmen. Here, we may also note that no payment is made for the wife and no dowry is received with her.

[illegible] To revert to Ovimbundu, considerably the spouses will not agree to the marriage and a separation might take place, but in the end, the marriage is usually regularized by the spouses coming to an agreement. If, however, the woman has in the meantime become

[illegible] [illegible] [illegible]

Amusements. Among the natives of east central Africa, the chief form of amusement, apart from dancing, might be said to be sitting and chatting; it is interesting to note that there is a word to express "sitting up all night talking." Often the younger members of the community will gather about one of the older men and listen to his stories of travel or fighting in the old days, and some men gain quite a reputation as raconteurs. Or again middle-aged is indulged in to pass the time. Women and girls do not assist at these sittings. 5A1

Among the Tao youth, wrestling, *ba-kiyaw* (from *ba-kiya*, to try), is practised with a fixed grip and no leg-work; the victor always commemorates his victory by hitting the man who is down, and pummelling his face with his fist or a stone. 5A6

A ball game, played originally with a ball of native rubber from which it derives its name, *mpira*, is a great favorite among boys. A dozen or more are divided into sides but all mixed up together. The ball is then thrown into the air to a member of the same side, any of the opposite side jumping into the air to try and catch it, accompanied by the clapping of hands to time.

"Hide-and-seek," *ahiyanyiwa*, and "tennis," *chee ne chenide* (*chiyawi*, Chin.), are played by boys.

Chimuqa: toward the end of the ball game, when it is decided to finish, each boy as he catches the ball puts it to his nose to smell (*ba-muqa*, to smell). He is then "out." At the end of a game of "tennis" played in the water, when one touches another, he jumps out of the water, puts his cloth up to his nose "to smell," and is then "out." His cloth may be thrown to him to "smell" while still in the water, after which he gets out without hurry. The object is not to be the last "in." I am unable to explain this custom.

Kanikiwanwa is played by girls, naked, from "*ikil*" the embarrassing mode when outside anything. 5A9

Mchemlwa: the Board and Counter game is played in nearly every Tao village. Dr. Sandeman[1] has given a very complete account of a number of the games played by the several tribes in Nyamland and I need add nothing to his explanation of the methods of playing.

Similar games are widespread throughout Africa and are well known on the West Coast under the same name. The several games are played, either simply with holes in the ground and small stones, or with a board and a kind of seed procured from Zanzibar. The board is called *mchemlwa* and the pebbles or seeds or other convenient "counters" *ajimbwa*. Dr. Sandeman uses this word as the name of one of the games. The Angoni call the counters *mawile*. The holes in the board or in the ground (Pl. XXII, fig. 10) are called *tpata* (sing. *ahipata*) from *ka-tpata*, to strike, beat, or put down with a thud, to "plant down," and refers to the way the counters are "planted down" in the holes on the board when playing. The large counter at the end of the board is simply to hold the counters out of play and is called *ngombe*, "the house," or *kimbu*, "the hole." The counters are

[1] Mumford S. Sandeman, "Native games of Central Africa" (Journ. Anth. Inst., 1910, vol. 40, p. 184-194).

called *bowy* wuhoso or nanhowu, the words given by Dr. Sanderson, are not known to the Tao in this district. There is a simple game played among the Anyanja children and therefore called *ohiwa* (*ahihiah* or *ho ahihiwa*), but the common game played is more difficult as shown by Dr. Sanderson. *Ahiwahiwa* is being partly displaced by a Swahili variety called *bao*, or *ohwa* by the Tao, *ohwa* (Pl. IV, fig. 4). I may here also point out that the words *wuwoso* and *nanhu*, which Dr. Sanderson uses for the Manyanja and Angoni varieties of the game, are often replaced by *wyhoso* and *tawa*.

Tao children play at keeping house in little grass structures, made near the village or in the fields, while their parents work. Children who are only toddle may be seen practising dancing the steps of their elders. The boys play with miniature bows and arrows made of a kind of grass, *wow*, and make a toy dart-tube, *ulé* (Pl. XXII, fig. 3). Little dug-out canoes eighteen inches long are made for them to sail in pools.

Among the kids in a village, games of fighting are much indulged in; two sides are opposed and their weapons are of various kinds. Sometimes each is armed with a length of bamboo, into the hollow end of which seed and pebbles are put, representing powder and shot. This end of the bamboo is then rapidly swung in the direction of the "enemy" and will discharge the seed and pebbles into the face of the opponent. This is called *ulé ja wanaja* ("gun for seed"). The boys are sometimes armed with maize cobs for throwing at each other.

Chiwere is another form of fighting. Armed with a collection of small stones, each Boko bin stones at the enemy with very good aim, using the fore-finger of the right hand to propel the stone, the index of the left hand acting as trigger and the left thumb as the spring. The name comes from *we* the sound of the whizzing stone as it goes through the air.

In a pool opposing sides fight with rudimentary syringes made of bamboo, driving streams of water into each other's faces. This is called *tjuwere*, from the sound of the stream of water, or *ulé ja mani* ("gun for water"). In the water they also play *chinzingichinga*, (*ho tsingichinga*, to press down). Boys are ranged on two sides; each tries to "collar" one of the opposing side and put him down into the water, holding him down between his legs. An old water trick is for a boy to go down to the bottom and there squat with his face turned upwards, the mouth stretched wide open by the fingers; viewed from the surface the face looked flat and very grotesque. There is also diving for reserve, *chitsitilla* (*ho tsitilla*, to dive for).

A kind of skipping, called *chiwere*, from *we* *we* the sound of the rope as it goes round in the air, is a great favorite. A rope with a heavy rope about fifteen feet long, with a bundle of grass at the free end enclosing a lump of heavy wood or stone, swings it round and round his head. The faster it goes, the higher it will fly out, while the boys in turn run in and jump over it. Sometimes a boy is caught by the rope and gets a nasty blow, occasionally resulting in a broken limb.

9: Nyasaland D-5 (ca. 1912) 1922 FT7 Yao FT7

Taking advantage of the natural inquisitiveness of youth, a favorite trick for making money is for a man to appear in a village making pretense of having a peep-show, something contained in a covered basket or in a cloth. On payment of some small amount, the youth is allowed to peep in, maybe only to see a dead mouse; finding he had been "done," he of course bursts out laughing and, anxious that all his companions should also be "done," he does not "give it away" and so the peep-show man makes quite a good living. 857 673 543

Two girls play with dolls of two kinds, *lilole*, made from little gourd-like fruits called *lilenge*, and others called *mwanaka*, "a child," made from maize cobs. These dolls they carry about on their backs as mothers do their children. *Lilole* is made of three of these little spherical fruits glued together with beeswax; on the one which represents the head, seed, red and blue, of the *ulenganje* tree are mounted in rows to represent hair, and often beads, as in the *mbumba* method of hair-dressing. One sees similar dolls made for the children of other tribes. Thus, among Mazitura's Angoni, a doll called *mwana*, "a child," is made in a clumb-bell form of two small spherical gourds joined by a bundle of sticks bound together with string and wax; on the head-piece string is mounted to represent hair. Their children also play with little clay images of cattle and men, a custom they have preserved from their old Zulu ancestors but foreign to the Yao. The Ankonde children have carved wooden dolls not seen in any other tribe. *M'wanaka* is made from a maize-cob by shredding the papery coverings of the cob; on these shreds are threaded white and red varieties of maize to represent beads, or the shreds are plaited into a number of tags to represent hair. 857 524

Latterly, the children have taken to making hoops and show considerable skill in driving them with a piece of bent reed (Pl. XXII, fig. 8), while the older boys make two-wheeled representations of bicycles with a very clever imitation of all the parts of the machine. [m]

The whipping-top, *nanpelpe* or *nanpanpe* (*ngoli*, Chin.), is found among the boys' toys. It is made of a conical piece of wood with a flat top and no metal peg. It is started spinning by pulling off the string wound round the top. The whip consists of a piece of string fastened to the end of a stick. Sometimes tops of large size are used, and two boys whip them from opposite sides (Pl. XXII, fig. 6).

A game called *ukipanda* is played by youths; it takes its name from *ku-pata*, to strike, and refers to the action of striking with a finger the hand in which a bean is guessed to be. A spiral is drawn with the finger in the sand with a central point to represent a village, and a tail-piece prolonged on one side to a second point which represents a slave-market on the coast. Along the line, a number of other points are demarcated to represent sleeping places en route. At the village, two white beans are put to represent the two players and with each is a smaller brown bean to represent his slave. At the slave-market are placed a variety of beans to represent trade-goods, cattle, beads, etc. Each of the two players in turn shakes a single bean in his closed hands and then shows the hands, separating them at the

3:Stanner D-5 (ca. 1912) 1922 FT7 Yao FT7

857 same time so that the bean is concealed in one hand; the other player has to guess in which
524 the bean lies and this he does by striking with the finger the hand in which he imagines the bean to be. If the striker guesses correctly, he moves his man and his slave to the first sleeping-place. It is then his turn to hide the bean. So it goes on till one or the other arrives at the slave-market. Here he barters his slave for trade-goods and returns in the same way; whoever gets home first wins, and the loser is said "to have died on the road," a not uncommon event in the old days. It is interesting to note that cheating is sometimes attempted
[788] by palming beans between the fingers, so that in the hand guessed, the bean is palmed between the fingers, and, in the other hand, a bean is released from between the fingers into the palm.

526 *Njoge* (sailors, Chin.): a kind of simpina, which takes its name from the object which is thrown to knock down the simpina. The game is played by youths and men, equal numbers sitting in two parallel rows fronting each other on the ground, the two rows composed of a dozen or more persons, a few yards apart. Each person has set up in front of him on the ground a maize cob from which the grain has been stripped, or each may have a number of them, perhaps six. In the former case, the cobs are perhaps two feet apart, in the latter only a few inches. Each player is provided with several njoge, from six to twenty-four in number. The njoge is a piece from the side of a gourd, slightly concavo-convex and slender in plan, with the edge often cut into serrations. A piece of reed is fixed through a hole in the centre, projecting an inch or an inch and a half from the convex surface, thus forming a kind of tentorium, two or three inches in diameter (Pl. XXII, fig. 9). It is held between the thumb and second finger by the foot-piece; by a sharp movement of the fingers, it can be spun out of the hand and, at the same time, jerked forward by another sharp movement at the wrist. At a given signal, the players on both sides start launching forth their little tops which spin away towards the maize cobs of the opposing side, the object being to knock them down. When there are many on a side, each with a number of cobs, many fall with the first onslaught, but as fewer and fewer remain, it becomes more difficult, and players try to show their skill by aiming at the cobs furthest away from them, along the opposite line. The game goes on till only one cob is left standing; then, if a player of the opposite side knocks it down, he puts one of his own up again, and the side which had the one remaining puts one up, and so the game may go on. When they are tired of playing, they say, "*Kwisale tsonge*," "We must finish the game," literally "Come on, we must small."[1] A knife is then stuck in the ground on either side, the blade pointing to the opposite side, and each man, when he has hit the knife of the opposing side with his njoge, is considered to have shown his skill, and goes off. The last man remaining is laughed at as being a fool at the game. If a headman is playing, he makes sure of having his try first, so that he will not be left in to the last. The game has a great fascination for the natives and it is said of Malenya, the uncle of the present chief (1912), that he was

[1] Vide supra, p. 356.

3:Stanner D-5 (ca. 1912) 1922 FT7 Yao FT7

526

so unfriendly a player that if anyone wanted to make a jokes at his expense, he would snap his fingers, imitating the action of throwing the njenje.

Chipulupulu: a Mang'anja game now played by the Yao which takes its name from *kupulupulu*, to scratch as a fowl does looking for food. The words used in the game are all Chinyanja. A number of beans, perhaps twenty, are put down in a row at intervals on the ground. One player manipulates the beans, while the other has his back turned so that he cannot see. The first player calls, "*Chipulupulu chipulupulu!*" the second answers, "*Mwana kkanga* (child of a guinea-fowl)." The first then says "*Nanga apa!* (What about here?)", pointing to the first bean; the second player answers "*Tolani!* (Pick it up!)." At the second round, the first player having picked up the first bean, points to the place where it was and repeats his cry, but at the words, "*Nanga apa,*" the second player has to say, "*Palibe!* (There is none!)." Then he comes to the second bean and says, "*Nanga apa*" and the second player, knowing that he has come to the second bean, answers, "*Tolani!*" When three, four, or five beans have been picked up, the first player asks three, four, or five times, "*Nanga apa?*" and the second player to each question should answer, "*Palibe!*" and then, when the first player points to a bean and not to a blank, the second player should know that he has come to a bean and answer, "*Tolani!*" instead of "*Palibe!*" When played quickly, it is not altogether easy to answer correctly, as the end of the line of beans is approached.

Chipuzo cha mapalo (to strike with the hand) is played with four pebbles or beans. Starting with two in each hand, the fists are closed and then making similar movements of throwing from each hand, two are thrown from one hand, or one from each as the case may be, as a sleight-of-hand. One of the two thrown on the ground is then taken up in each hand, and the guesser has to say in which the three are. This he indicates by striking the hand with one of his fingers. This game has many variations.

Chikutuku: a game of jumping from a big rock over a fire. Before jumping, the boys sing, "*Chikutuku chikutuku ndi!*" 857 529 528

Chindumudumu (to-dum, to pinch): each of a number of boys heavily pinches hold of the skin of the back of the hand of his neighbor, one hand above the other. They then sing:

"*Chindumudumu chindumudumu, ndibidule!*"
"Pinch Pinch, out number!"

At the word ndibidule, everyone should break away while digging his nails into the hand beneath him. Some one of them is sure to have had his attention distracted and forgot to pinch hard, while he himself receives a pinch hard enough to make him jump.

Running game, each boy learns a note: — "*ma . . . ta,*" each one is a different boy. Anyone changing his note is disqualified.

Ipuzo: a number of stems of a reddish grass with long joints, or small millet stalks are bound together by their upper ends. The free ends are heated in a fire, then hanged down 529 857

3:Sikanse D-5 (ca. 1912) 1922 FT? Yao FT?

524 657 on a stone. They explode with a noise like the sound of a gun. The boys send them off, one after the other, imitating fighting, or sometimes bang them down on some one's head. They go off, making the sound *(pang)*.

Small boys or girls among themselves play a clapping game called *pyapiile*. One sings:

[537] "*Pyapiile pyapiile, pyapiile pyapiile, pyapiile pyapiile, fumpwe wangi'je pa mlungu pa' ruwa!*
"Bump bump bump bump bump bump the one who has passed movement the at the door at his mother's,

Ngumbe, hanu, hanili! etc.,
let him clap once, twice! etc.

They all clap together at the word "once," "twice," and so on. No one knows how many times they are going to be called on to clap, and some one is sure to clap when no word is given and so is caught and made fun of, as the one who has misbehaved.

[52 A01] *Lilomin* (lo-lomin, to clap): simple clapping when pleased with anything is commonly indulged in, mostly by women and girls.

Little girls play at making little pots. This is called *gumbeinige*, (lo-gumbe *ainige*, to model a pot). They also play at pounding grain, called *ainiduli*, "learning to keep time," the word itself being an imitation of the sounds. Five or six pound in one mortar; in between strokes, they throw the wooden pestles up in the air, catching them again in time.

[537] "*Jukupilude hatuli pa' ujo wanni ja ululugu!*"
"The one who opens little mortar that that one which is bewitching!"

This is the song of a game played by little girls. One sits in the middle with a stepper on her head, to represent a grain mortar, while the others form a ring round her holding hands. As they sing, the circle at one point swings in, and one of the girls passes in front of the one sitting down, her back to her all the time, the hands passing over her head. This they do one after the other very quickly and anyone who touches the girl in the middle, "who bounds down the mortar," takes the place of the girl in the middle.

[538] "*Ammumuyo Ammumuyo ujulati ulul!*"
"Our wives, our wives, nothing all (interjection)!"

is the song of a game played by a lot of boys together or a lot of girls together; they do not join with one another. Two opposing groups are formed of equal numbers. Each is led by one of the older children and behind him is the rest of the group, each holding on to the cloth of the one in front. The followers of each leader represent his wives. The two parties then sing and manoeuvre for the leader to get at the tail of the other group and "seize" a wife or two from his opponent. It becomes very exciting. As they go faster and faster, some of the tail may get swung off and captured by the other side before they can again join their own.

Trapping and catching of animals is pursued with great glee by small boys. They make many of the traps, particularly the two kinds of *kilion*, *chipuzo*, *chijuwala*, *chimwa*, *lisuwa*, and *upwa*. *Lilion* is set in rat runs and the rats are driven into them (Pl. XX, fig. 4). Digging-out rats is a favorite amusement for the boys and brings meat to the pot. May is the best month for this sport. They are adepts at recognizing burrows which have rats inside. Digging is commenced at one entry to the rat-warren, the escape holes being closed with tufts of grass. As they get nearer the rat chambers, they smell the earth and so know when they are quite close to the rats. A bunch of grass is then put in this hole, lighted, and kept aglow by blowing on it. One of the rats will try to bolt and is knocked on the head. His head is then squashed to kill him effectually, and the skin of the tail of the first rat is always pulled off for luck, "so that they may catch many." They will try to guess how many there are going to be, "ten and ten and five and two!" Each rat when caught is buried under some earth, so that the hawks will not swoop down and carry it off. When they have finished one warren, one of the party is appointed to carry all the rats. He ties a string round his waist, and the rats are slipped underneath it and so secured. They then go on to another; the carrier will bear the whole catch for the day and may, before they have finished, have several strings of rats round his body, one above the other.

Digging-out crabs, *ku-kupa ngulu*, is another favorite amusement for children; (*ku-kupa* is to dig up anything like sand which makes a squelching sound). Crabs are never eaten with flour, but always with *mnunu*, the grain banks, "crabs and brown-bread!"

Youths and girls fish with a rod, line, wire hook, and worm, *ku-kupuza uwuku*, to pull up fish. They also catch fish, using the fish poison, *mtuto*. Birds are killed with a bow and a blunt-pointed wooden arrow.

A small boy, seeing a girl or a younger boy with a cob of maize and wanting it himself, will say, "Let me make a path to the meat!" He will then remove, say a couple of rows of maize grains for himself, work to the interest of the owner; or "Let me make *ilumba*" (*ilumba* is a shaved head on the scalp), or "Let me make the snail's eyes!" when two ordinary grains are left, surrounded by a simple ring of other grains, as the girl's portion.

Children are taught a little saying about their fingers which reminds one of the "This little pig went to market" of one's infancy. Starting with the little finger, they say:

> "*Alabe* [illegible] *kangalabe* [illegible]"
> "This little one (is) the one which cannot draw water!"

Pointing to the ring finger,

> "*Kambalapuse* [illegible]"
> "This little one's brother (is) the one that picks the meat!"

To the middle finger,

> "*Kipuguwale* [illegible] [illegible]"
> "(The brother of) the one that picks the meat (is) the one who finishes meat!"

3: Stanzas D-5 (ca. 1912) 1922 FT7 Yao FT7

657 To the hole:

524 "*Lukungulo luwa ng'ulube luwa luwandula mwilimuka!*"

539 "(This one is) the leg of an ox which walks on the plain!"

To the thumb:

"*Chamuwa*"

"The fifth"

657 Cat's Cradle are known as *chinjewa*, "the spider's web" (Pl. XXIII). The position
524 of the string on the hands is as in Position I of Miss Haddon's book and this is followed by Opening A, given by the same author.[1] (Pl. XXIII, figs. 1, 2.) Three methods of arriving at the same figure, which is called "the net," are shown here (Pl. XXIII). Variety C is followed by the making of a knot, figured in C 13, known as "the child." There are probably a number of other forms made by natives, but these, which I saw one of my women patients make, will serve as an example.

539 Musical Instruments. The number of instruments proper to the Yao appears to be small, indeed probably only two in number, the *mwpolompondo* and the *chilipulipu*, with perhaps the three baked flute, *chimbwe*.

The former is constructed on the principle of a xylophone; it consists of two trunks of banana trees laid on the ground and held in position by stakes. They are not quite parallel but approach each other somewhat at one end, being from one to two feet apart; on these rest cross-wise a number of pieces of wood of varying thickness and length, kept in position by pegs driven into the banana trunks on each side of each billet. These are struck with sticks by a single player, or by two persons sitting on opposite sides of the instrument. Another variety is found in which the pieces of wood, which may have holes bored in them to effect differences in sound, are arranged over a hole scooped in the ground (Pl. [illegible], fig. [illegible]).

The *chilipulipu* consists of a piece of plank hollowed out to form a resonator on which are fixed a number of keys of bamboo or metal of different lengths. These are arranged across a bridge, and the free ends are set in vibration by twanging with the fingers.

[FT] The instrument now most commonly seen is the one which was introduced, I think, from the coast about 1890 to 1900. It is a type of guitar.

An instrument played by women — and this again is of recent introduction among the Yao — is the *mlomporo*, which consists simply of a stick of wood about a yard long to which is affixed a single string. One end is held between the teeth, the other in the hand; it is twanged by being struck with the thumb and finger of the other hand close to the mouth, which is opened to different degrees, and gives a variety of notes resembling those of a jews' harp.

The *ching'wengwengwengo* and drums are referred to under *Dancing*.

[1] Kathleen Haddon, Cat's cradles from many lands, New York, 1911.

3:Siamese D-5 (ca. 1912) 1922 FT7 Yao FT7

524
322

2. A pit of Yao Lao

3. Cooking dinner over charcoal on the road of Ba

346
531
177

4. A Mohammedan village decorated with crescents
houses of Chief Ngoon

5. A village [illegible] for [illegible]

[End Plate 4]

3:Stanhope D-5 (ca. 1912) 1922 FT7 Yao FT7

[End Plate 22]

● 524

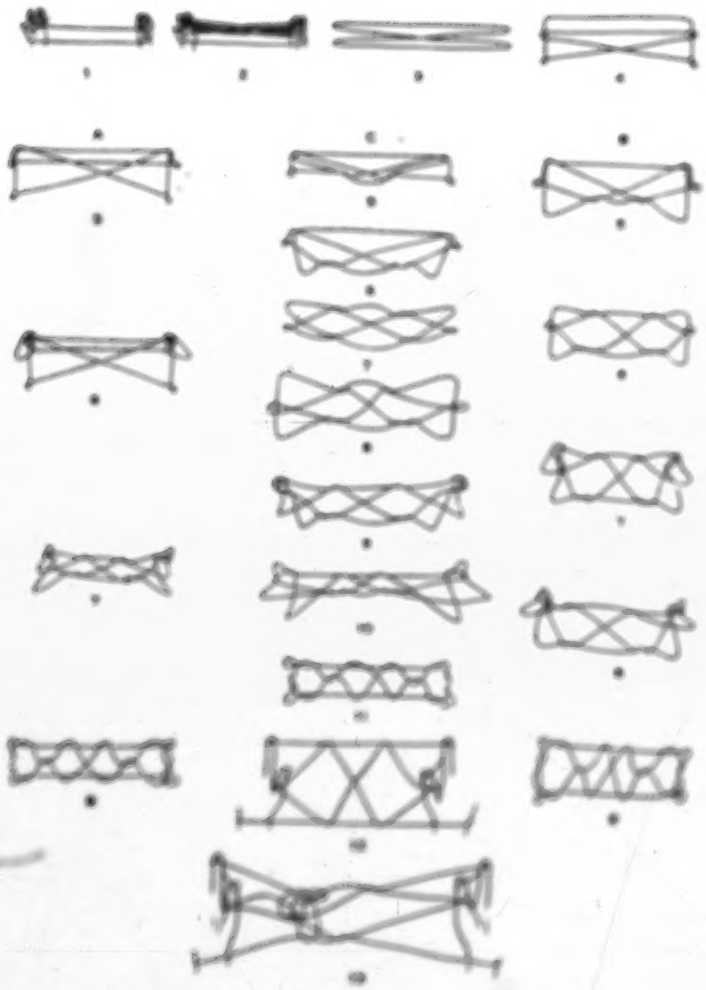

[End Note 23]

4: Stannus D-5 (ca. 1909)1910 FT? Yao FT?
Morari F84

When a number are working they take time from the front man, the rear man steering with his ordinary paddle. The passengers sit in the middle, a chief towards the stern. They never lose sight of land even in crossing the widest part of the lake. Stones are now used occasionally as anchors up the lake; grass houses are made to shelter canoes. The smaller canoes are 2 feet to 2½ feet high, the very large ones used to be 4 and 5 feet high; except on the lower river, where canoes have made similarly shaped, they are made with a bow more pointed than the stern and having a beak (Fig. 18). There is no ornamentation and no figure heads.

In every lake-shore or river-side village or collection of huts will be found one or more canoes; these belong to some one man, others using them paying a fee. At the launching of a new canoe, beer is made and the women dance, and medicine is made for its safe journey.

SWIMMING.

Not even all lake-shore natives swim, though most do. The art is learnt in childhood and not taught. They are not very fast swimmers, and I do not think could swim very far. They sometimes dive head first and practise staying under water. They swim rather like a dog, both arms coming a little out of water, but not a trudgeon stroke; arms are kept straight. They sometimes swim on the side, but never use the ordinary breast stroke.

GAMES.

Several games are played resembling the game of wari introduced from Zanzibar (Mancala); wari is played on a board in which rows of holes have been cut; beans are used as counters.

Mikombwa.—*A game found among Anyanja and Machinga; it may be played on a wari board, but is often played in holes made in the ground with stones. The Angoni game chipalapala is played in the same way. At Fort Anderson is a heap of stones in which hollows have been made similar to those made in the ground. It is the only piece of stone-work I know in the country. Children and women play kawitikawa (mabale).*

A man tries to cut boards to keep saying ndiwa-kiwa-dwa . . . . while another makes a pile of stones from another pile of ten, taking one at a time, saying, "To take and put in there makes one," etc. Men play at guessing in which hand an object is hidden, or one out of two men sitting in a house has to guess with whom a certain object is. No forfeits.

Pendanda (white spider) is cat's cradle.

Pati (hide and seek) one hiding, five or six seeking.

There are no dice games. Cards were introduced from the coast before the advent of Europeans into the country; the games are various and difficult to follow.

A slip-shod kind of wrestling is practised by Anyanja youths; the Machinga

4: Stannus D-5 (ca. 1909) 1910 FT7 Yao FT7
Marawi FR4

wrestle thus: each man passes his right arm round his opponent's waist and grips his opponent's left wrist. When one has thrown the other, the victor spits on his hand, dips it in the dust and then smears his victim on the forehead.

The boys practise long jumping. Small boys make miniature bows and arrows, spears, etc., to play with; in their ways and frolics small children resemble European children exactly. Little girls play at dolls—they cut cucumbers into shape and dress them in calico cloth, carrying them on their backs and making gestures to suckle them.

The first words spoken by an infant are *ma* (*amai*=mother) and *ta* (*atata*=father); at two years *mama* and *tata* are words used; a word soon learnt is *tatawa* "No! I don't want to."

The only acting I ever heard of occurred when my own Machila men once acted a village scene, in which a woman (a man dressed up) while pounding corn was seized and raped by another man. At the right moment her husband and others rushed in and collared the man, who was condemned to have his head cut off; the execution followed.

DANCES.

The following is a list of dances; opposite each is the name of the tribe who dance it:—

1. *Chimlinda*, Yao.	13. *Lelaw*, Yao.
2. *Lilomba*, Yao.	14. *Njoda*, Yao.
3. *Ulale*, Yao.	15. *Sokwa*, Yao.
4. *Mitowai*, Mahenje.	16. *Nanjo*, Yao.
5. *Kwajo*, Mahenje.	17. *Nkondi*, Yao.
6. *Pimbumbwa*, Mahenje.	18. *Chikwale*, Yao.
7. *Mkanse*, Mahenje.	19. *Mkwaw*, Yao.
8. *Kwangwa*, Mahenje.	20. *Mwapwji*.
9. *Mtanda*, Mahenje.	21. *Sanji*.
10. *Chilwi*.	22. *Chiwawawa*.
11. *Pingwa*, Mahenje.	23. *Mawa*, Mahenje and Yao.
12. *Ntala*, Mahenje.	24. *Mwaiwabola*, Yao.

1. *Chimlinda*.—Danced at the *malele* (mourning ceremony) generally inside the house unless a very large number of people are present.

All sit round and clap while one after the other man and woman get up and dance in a rocking motion from one foot to the other, a small drum held against the chest; in former times a large *ulu* lying on the ground used also to be used—now two or three, standing on legs, are employed. When danced in the dead man's house, the body lies at one end of the room with the *Ankhola* sitting by it. On one side are the walkers, and on the other the dancers, the dance being sometimes started immediately after death, sometimes the following morning and continued for three days.

This dance is also performed at almost any beer drinking.

Amusements. Among the native of east central Africa, the chief form of amusement, apart from dancing, might be said to be sitting and chatting; it is interesting to note that there is a word to express "sitting up all night talking." Often the younger members of the community will gather about one of the older men and listen to his stories of travel or fighting in the old days, and some men gain quite a reputation as raconteurs. Or again riddle-asking is indulged in to pass the time. Women and girls do not assist at these sittings. 5A1

Among the Tao youth, wrestling, *ku-lingana* (from *ku-linga*, to try), is practised with a firm grip and no leg-work; the victor always accentuates his victory by hitting the man who is down, and pummelling his face with his fist or a stone. 526

A ball game, played originally with a ball of native rubber from which it derives its name, *mpira*, is a great favorite among boys. A dozen or more are divided into sides but all mixed up together. The ball is then thrown into the air to a member of the same side, any of the opposite side jumping into the air to try and catch it, accompanied by the clapping of hands to time.

"Hide-and-seek," *chijumujum*, and "touch," *chao* or *chaokile* (*chijum*, Chin.), are played by boys.

Chimuqu: toward the end of the ball game, when it is decided to finish, each boy as he catches the ball puts it to his nose to smell (*ku-muqu*, to smell). He is then "out." At the end of a game of "touch" played in the water, when one touches another, he jumps out of the water, puts his cloth up to his nose "to smell," and is called "out." His cloth may be thrown to him to "smell" while still in the water, after which he gets out without hurry. The object is not to be the last "in." I am unable to explain this custom.

Kumbla-bomo is played by girls, mainly, from "*ku*" the onomatopoic mark when striking anything. 529

Wikombo: the Board and Counter game is played in nearly every Tao village. Dr. Sandeman[1] has given a very complete account of a number of the games played by the several tribes in Wynnland and I need add nothing to his explanation of the methods of playing.

Similar games are widespread throughout Africa and are well known on the West Coast under the same name. The several games are played, either simply with holes in the ground and small stones, or with a board and a block of wood procured from Zanzibar. The board is called *mikombo* and the pebbles or seeds or other convenient "counters" *ujombo*. Dr. Sandeman uses this word as the name of one of the games. The Angoni call the counters *mamba*. The holes in the board or in the ground (Pl. XXII, fig. 11) are called *tpata* (*ding*, *chipata*) from *ku-pata*, to strike, hunt, or put down with a thud, to "plant down," and refer to the way the counters are "planted down" in the holes on the board when playing. The large container at the end of the board is simply to hold the counters out of play and is called *ngamba*, "the house," or *kimba*, "the hole." The counters are

[1] Sandeman, "Native games of Central Africa" (Trans. Anth. Inst., 1914, vol. 44, p. 148-154).

called bowy, nsikene or nsenkene, the words given by Dr. Sanderson, are not known to the Tao in this district. There is a simple game played among the Anyanja children and there here called ulowa (ukhlala or for children), but the nsenkene game played is more difficult as shown by Dr. Sanderson. Mikombwe is being partly displaced by a Swahili variety called bao, or ulwa by the Tao, ulwa (Pl. IV, fig. 4). I may here also point out that the words nsenen and nsala, which Dr. Sanderson uses for the Mwanyanja and Angoni variation of the game, are often replaced by nylwa and tawa.

Tao children play at keeping house in little grass structures, made near the village or in the fields, while their parents work. Children who can only toddle may be seen pounding dancing the steps of their elders. The boys play with miniature bows and arrows made of a kind of grass, ssaw, and make a toy dart-tube, ut (Pl. XXII, fig. 3). Little dug-out canoes eighteen inches long are made for them to sail in pools.

Among the lads in a village, games of fighting are much indulged in; two sides are opposed and their weapons are of various kinds. Sometimes each is armed with a length of bamboo, into the hollow end of which sand and pebbles are put, representing powder and shot. This end of the bamboo is then rapidly swung in the direction of the "enemy" and will discharge the sand and pebbles into the face of the opponent. This is called ut ja mwanga ("gun for sand"). The boys are sometimes armed with cruise cobs for throwing at each other.

Chinene is another form of fighting. Armed with a collection of small stones, each thinks his stone at the enemy with very good aim, using the bow-finger of the right hand to propel the stone, the index of the left hand acting as trigger and the left thumb as the spring. The same comes from ne the sound of the whizzing stone as it goes through the air.

In a pool opposing sides fight with rudimentary syringes made of bamboos, driving streams of water into each other's faces. This is called ipinene, from the sound of the stream of water, or ut ja mwi ("gun for water"). In the water they also play chinkingichinge, (ku-kingichinge, to press down). Boys are ranged on two sides; each tries to "collar" one of the opposing side and put him down into the water, holding him down between his legs. An old water trick is for a boy to go down to the bottom and there squat with his face turned upwards, the nostrils stretched wide open by the fingers; viewed from the surface the face looked flat and very grotesque. There is also diving for sweets, chikwetile (ku-kwetile, to dive for).

A kind of skipping, called ilinene, from ssi ssi the sound of the rope as it goes round in the air, is a great favorite. A rope with a heavy rope about fifteen feet long, with a bundle of grass at the free end enclosing a lump of heavy wood or stone, swings it round and round his head. The faster it goes, the higher it will fly out, while the boys in turn run in and jump over it. Sometimes a boy is caught by the rope and gets a nasty blow, occasionally resulting in a broken limb.

1: Swanson D-4 (on. 1912) 1932 FT? Too FT?

[857] [524] some time so that the bean is sustained in one hand; the other player has to guess in which the bean lies and this he does by striking with the finger the hand in which he imagines the bean to be. If the striker guesses correctly, he moves his man and his shere to the first sleeping-place. It is then his turn to hide the bean. So it goes on till one or the other arrives at the shere-market. Here he barters his shere for trade-goods and returns in the same way; whoever gets home first wins, and the loser is said "to have died on the road," a not uncommon event in the old days. It is interesting to note that cheating is sometimes attempted [789] by palming beans between the fingers, so that in the hand guessed, the bean is palmed between the fingers, and, in the other hand, a bean is released from between the fingers into the palm.

[526] *Njanga* (native, Chin.): a kind of ninepins, which takes its name from the object which is thrown to knock down the ninepins. The game is played by youths and men, equal numbers sitting in two parallel rows fronting each other on the ground, the two rows composed of a dozen or more persons, a few yards apart. Each person has set up in front of him on the ground a maize cob from which the grain has been stripped, or each may have a number of them, perhaps six. In the former case, the cobs are perhaps two feet apart, in the latter only a few inches. Each player is provided with several njanga, from six to twenty-four in number. The njanga is a piece from the side of a gourd, slightly concave-convex and circular in plan, with the edge often cut into serrations. A piece of cord is fixed through a hole in the centre, projecting an inch or so inch and a half from the convex surface, thus forming a kind of tentorium, two or three inches in diameter (Pl. XXII, fig. 9). It is held between the thumb and second finger by the foot-piece; by a sharp movement of the fingers, it can be spun out of the hand and, at the same time, jerked forward by another sharp movement at the wrist. At a given signal, the players on both sides start launching forth their little tops which spin away towards the maize cobs of the opposing side, the object being to knock them down. When there are many on a side, each with a number of cobs, many fall with the first onslaught, but as fewer and fewer remain, it becomes more difficult, and players try to show their skill by aiming at the cobs furthest away from them, along the opposite line. The game goes on till only one cob is left standing; then, if a player of the opposite side knocks it down, he puts one of his cobs up again, and the side which had the one remaining puts one up, and so the game may go on. When they are tired of playing, they say, "*Kasinda nonoga*." "We must finish the game," literally "Come on, we must small."[1] A knife is then stuck in the ground on either side, the blade pointing to the opposite side, and each man, when he has hit the knife of the opposing side with his njanga, is considered to have shown his skill, and goes off. The last man remaining is laughed at as being a fool at the game. If a headman is playing, he makes sure of having his toy first, so that he will not be left in to the last. The game has a great fascination for the native and it is said of Malenya, the uncle of the present chief (1912), that he was

[1] Vide supra, p. 340.

3:Stanner D-5 (ca. 1912) 1932 ??? Too ???

526

to unfamiliarize a player that if anyone wanted to make a joke at his expense, he would snap his fingers, indicating the action of throwing the ninge.

Chipulupuse: a Mang'anja game now played by the Yao which takes its name from *kapulupuse*, to stretch as a fowl does looking for food. The words used in the game are all Chinyanja. A number of beans, perhaps twenty, are put down in a row at intervals on the ground. One player manipulates the beans, while the other has his back turned so that he cannot see. The first player calls, "*Chipulupuse chipulupuse!*" the second answers, "*Wanse Mungu* (child of a guinea-fowl)." The first then says "*Nungu apa!* (What about here?)", pointing to the first bean; the second player answers "*Palenji!* (Pick it up!)." At the second round, the first player having picked up the first bean, points to the place where it was and repeats his cry, but at the words, "*Nungu apa,*" the second player has to say, "*Palibe!* (There is none)." Then he comes to the second bean and says, "*Nungu apa?*" and the second player, knowing that he has come to the second bean, answers, "*Palenji!*" When three, four, or five beans have been picked up, the first player asks three, four, or five times, "*Nungu apa?*" and the second player to each question should answer, "*Palibe!*" and then, when the first player points to a bean and not to a blank, the second player should know that he has come to a bean and answer, "*Palenji!*" instead of "*Palibe!*" When played quickly, it is not altogether easy to answer correctly, as the end of the line of beans is approached.

Chipuzu cha wapuli (to strike with the hand) is played with four pebbles or beans. Starting with two in each hand, the fists are closed and then making similar movements of throwing from each hand, two are thrown from one hand, or one from each as the case may be, as a sleight-of-hand. One of the two thrown on the ground is then taken up in each hand, and the guesser has to say in which the three are. This he indicates by striking the hand with one of his fingers. This game has many variations.

Chikutuku: a game of jumping from a big rock over a fire. Before jumping, the boys sing, "*Chikutuku chikutuku ooh!*" 557 529 526

Chidumudumu (to-dum, to pinch): each of a number of boys heavily pinches hold of the skin of the back of the hand of his neighbor, one hand above the other. They then sing:

"*Chidumudumu chidumudumu, ooh!*"
"*Pinch Pinch, not another!*"

At the word *ooh!*, everyone should break away while digging his nails into the hand beneath him. Some one of them is sure to have had his attention distracted and forgot to pinch hard, while he himself receives a pinch hard enough to make him jump.

Running round, each boy hums a note:—"*um . . . m,*" each one in a different key. Anyone changing his note is disqualified.

Ipuse: a number of stems of a reedlike grass with long joints, or small millet stalks are bound together by their upper ends. The free ends are heated in a fire, then hanged down 529 557

G. Blackman D-S (m. 1995)1910 FT7 Tue FT7
Market 1 F69

When a number are working they take time from the head man, the man
P 7 standing with his ordinary paddle. The passengers sit in the middle, a chief
501 towards the stern. They never lose sight of land even in crossing the widest part of
the lake. Houses are now used occasionally as stalkers up the lake; great houses are
made to shelter canoes. The smaller canoes are 2 feet to 2½ feet high, the
very large ones used to be 4 and 5 feet high; except on the lower river, where
canoes have made similarly shaped, they are made with a bow more pointed than
the stern and having a beak (Fig. 18). There is no ornamentation and no figure
heads.

In every lake-shore or river-side village or collection of huts will be found
P 7 one or more canoes; those belonging to much one man, others using them paying a
[illegible] fee. At the launching of a new canoe, beer is made and the women dance, and
medicine is made for the safe journey.

Swimmers.

P 7 Not even all lake-shore natives swim, though most do. The art is learnt in
[illegible] childhood and not taught. They are not very fast swimmers, and I do not think
could swim very far. They sometimes dive head first and practise staying under
water. They swim rather like a dog, both arms coming a little out of water,
but not a trudgeon stroke; arms are kept straight. They sometimes swim on
the side, but never use the ordinary breast stroke.

Games.

P 7 Several games are played resembling the game of *ohwe* introduced from
524 Zanzibar (Mancala); *ohwe* is played on a board in which rows of holes have
been cut; beans are used as counters.

Ndamalwa.—A game found among Anyanja and Mashinga; it may be played
on a *ohwe* board, but is often played in holes made in the ground with stones. The
Angoni game *chipalapala* is played in the same way. At Fort Anderson is a heap
of stones in which hollows have been made similar to those made in the ground.
It is the only piece of stone-work I have in the country. Children and women
play hoop-kicking (*nchalo*).

A man tries to use hands to keep saying *ndwi-ndwi-ndwi* . . . . while
another makes a pile of stones from another pile of ten, taking one at a time,
saying, "To take and put it there makes one," etc. Also play at guessing in which
hand an object is hidden, or one out of two men sitting in a house has to guess with
whom a certain object is. Its forfeits.

Pembenda (=the spider) is cat's cradle.

Fisi (hide and seek), one hiding, five or six seeking.

P 7 There are no dice games. Cards were introduced from the coast before the
[illegible] advent of Europeans into the country; the games are various and difficult to follow.

P 7 A slip-shod kind of wrestling is practised by Anyanja youths; the Mashinga
● 536

wrestle then; each man passes his right arm round his opponent's waist and grips his opponent's left wrist. When one has thrown the other, the victor spits on his hand, dips it in the dust and then smears his victim on the forehead.

The boys practise long jumping. Small boys make miniature bows and arrows, spears, etc., to play with; in their ways and bodies small children resemble European children exactly. Little girls play at dolls—they cut cucumbers into shape and dress them in rather cloth, carrying them on their backs and making pretence to suckle them.

The first words spoken by an infant are *ma* (mother) and *ta* (father); at two years names and into one words and; a word was learnt in Anyanja "No! I don't want to."

The only acting I ever heard of occurred when my own Mashile man came and a village man, in which a woman (a man dressed up) while pounding corn was seized and raped by another man. At the right moment her husband and others rushed in and collared the man, who was condemned to have his head cut off; the execution followed.

Dances.

The following is a list of dances; opposite each is the name of the tribe who dance it:—

1. *Chinalinda*, Tan.	13. *Jolum*, Tan.
2. *Jidumbe*, Tan.	14. *Kjinda*, Tan.
3. *Gulu*, Tan.	15. *Sukum*, Tan.
4. *Mdawari*, Mahenje.	16. *Mangla*, Tan.
5. *Kwajo*, Mahenje.	17. *Mlondi*, Tan.
6. *Pindumdoro*, Mahenje.	18. *Chikondi*, Tan.
7. *Mkwaro*, Mahenje.	19. *Mkwaro*, Tan.
8. *Kwangwara*, Mahenje.	20. *Mangwaji*.
9. *Mlondo*, Mahenje.	21. *Angi*.
10. *Chikai*.	22. *Chiwawawa*.
11. *Pingwa*, Mahenje.	23. *Mawu*, Mahenje and Tan.
12. *Pindi*, Mahenje.	24. *Mwajambula*, Tan.

1. *Chinalinda.*—Danced at the mdoto (mourning ceremony) generally beside the house where a very large number of people are present.

All sit round and clap while one after the other men and women get up and dance in a rocking motion from one foot to the other, a small drum held against the chest; in former times a large one lying on the ground used also to be used—now two or three, standing on legs, are employed. When danced in the dead man's house, the body lies at one end of the room with the *Akalinda* sitting by it. On one side are the women, and on the other the dancers, the dance being sometimes started immediately after death, sometimes the following morning and continued for three days.

This dance is also performed at almost any beer drinking.

Z: Mitchell E-5 (1946-1949) 1956 FT7 Yao FT7

wanted human flesh.[1] They said that they had a strong headman and that they could trust him; he was a good headman without witchcraft. If he had been a sorcerer they would have kept wedding him until the next morning.

About two hours after sunrise the people gathered and started dancing. At about this time Cimombo was brought out of the hut and put in the grass shed which had been built for the occasion. This was the climax of the ceremony.[2] He sat on a chair in the grass shed with one of his two wives on either side. Makoka then started a chant, exhorting the visitors to come to throw pennies at Cimombo's feet. Some of the people then made speeches about the type of behaviour they would expect from him. Then Nyambi arrived from the court village in a rickshaw. When the noise had subsided he told the people that if they disobeyed Cimombo it meant that they disobeyed the chief. He emphasized the importance of the rank of the new headman. After the speech he presented 12s. to Cimombo which was received on his behalf by Nzimbo. Nyambi then left and the ceremony was over, but the people remained to dance and drink beer.

This description of the procedure following the "coming out of the hut" is somewhat sketchy. The interaction of the headman and his villagers on this formal and ceremonial occasion is of great interest and importance. During the entire ceremony the headman adopts the pose which is appropriate for any Yao initiand. His hands are on his lap or on the arms of the chair and his head is bowed forward with eyes downcast. He neither speaks nor moves. His attendants, when necessary, wipe the sweat off his face or chase away the flies. The other occupants of the mat, who may be his wives, and sometimes his heir, adopt similar postures. In contrast to this, is the behaviour of the villagers who run about shouting wildly, the men discharging muzzle-loading guns, and women ululating in the typical Central African way.

Before the new headman comes out of the hut his mamwe

[1] This is a use based on the witchdoctors of the Yao, who believe that sorcerers kill relatives with magic and then share out the flesh of their victims with fellow-sorcerers in ghoulish feasts.

[2] Called the "coming out from the hut" (*kukupulo ngombe*). It is of course the first public appearance of the headman in his newly assumed status.

[illegible] gives an excellent idea of the average figure. It is circular in plan, often with a little hillock in the centre known as *bokonki bonyongoli*, "the hill of debt," and disposed in the quadrants are four depressions.

[illegible] When the soul are introduced to Chiquno, they stand round in a circle while the *n'ombilo* stands in one of the depressions with perhaps two of his assistants in others. The *n'ombilo* sings:

[illegible] "*Ryoro bonyongoli chimyongoli ramondo ntiyondo bodondo, ramo!*
[illegible] "*Ntu bolo ramondo ma I bora ekki I would have died on the plain, mother!*"
"*Ntiyondo ntiyondo!*"

or

"I have lived by the great hole of my life; I should have died in the plain!"

while all three make movements as of pudding a mass. The depressions are said to represent graves. I believe this is the recognized form but I have also seen an oblong figure with two mounds of unintelligible meaning. Chiquno is usually found near *nshongwani*.

Chinto, when represented, stands beyond *nshonda*. It consists of two branches at right angles forming a cross, which are covered over with logs and earth and the whole outlined with flour in a decorative pattern. The end of one limb of the cross is left open and round this opening a mound of grass is made. As the soul approach *Chinto*, some of the assistants or shamans descend into the branches for the ceremony. The *n'ombilo* takes up his stand at the centre of the cross and sings:

"*Chinto, ramo, bodondo chinto!*"
"*Chinto, mother, come-on chinto!*"

[illegible] [illegible] There as everyone says "*Listen, listen!*" saying is heard "coming out of the bowels of the earth," followed by drumming and the singing of the *chinkinda* songs (sometimes *nshonda* or *mondo*); a horn is sometimes heard as well as *bokinda*, trilling with the tongue against the lips. *Chinto* is called "the resting place of all departed spirits" and the sounds are said to be the echoes of their doings. The word is not met with elsewhere among the Tete, although it occurs in the Chinyanja and in other languages of this country with the meaning "the heavens."

Chinsin is said by Bodinowitch to be "a large fish that forms one of the pictures at the Dipungu," but I have never seen it or heard of it, and I am doubtful of the correctness of the statement.

[illegible] *Chingi'ombongi'ombo*: Dr. Dorsey's photograph[illegible] is an excellent representation of this figure, which consists of a mound of earth flattened on the top, and decorated with geometric patterns in flour which extend to the ground. In the centre and at the four corners, so to speak, are implanted billets of wood with decorative lines and dots in black and red on the white wood (Pl. II, figs. 1, 2). The billets are three inches in diameter and project twelve to fifteen inches above the ground.

[illegible] Bonifacio of the Fort language op. cit., p. 141. [illegible] Op. cit., Pl. III, fig. 2.

323 Wood near Sandia. Sometimes pots are also painted all over the outside or in patterns with orange, a natural graphite.

323 578 Potsherds of a simple character, often of the boating bowl order, are commonly gouged about the neck of the pots with the aid of a stick of bamboo. There is considerable variety in the size and shape of the pots made. As with gourds, the pot takes its name from the use to which it is put and not from the shape or size. All pots have rounded bottoms; some have a flattened base or standard.

The following varieties of pots may be mentioned:

323 485 1. *Lobedu*, large pots for beer-making. These are usually roughly made and seldom have any decoration on them; they stand about two feet high and are side-mouthed (Pl. XV, figs. 1, 6).

2. *Lomb* (*ulombo*, Chin.): water-pots. These are usually well moulded and well finished pots, full bulked with broad base and a certain amount of neck. They are practically always decorated and often coloured. They are about twelve inches high and twelve inches across the broadest diameter (Pl. XV, figs. 8, 9, 10).

3. *Chinkuge* (*ulombo*, Chin.): cooking pots used for cooking the flour porridge *upuk*. These are wide, open-mouthed pots six to ten inches high, with bulky and more or less straight sides (Pl. XV, figs. 1, 4, 7). This name also applies to the cooking vessel for medicinal concoctions.

4. *Chipungu* (*mpulu*, Chin.): smaller pots of the same type as 3, used for cooking beans, fish, green stuff, and the edible *mbugu* (*ndiwa*, Chin.) (Pl. XV, fig. 3).

5. *Mtulo* (*ulombo*, Chin.): the bath water pot. The smallest pot used for heating water to bathe the husband after sexual intercourse bears the same name. It is found among both the *Anyanja* and the *Wayao* (Pl. XV, fig. 2).

6. *Mtulo* (*Yao* and Chin.): the plate, a shallow, wide-open vessel.

Baskets. The basket work of the *Yao* is all of one type and is done by the men. All baskets are made of plaited strips of bamboo, the free edges of the strips being bound between thicker pieces of the same wood forming the rim, the binding being done with the sinew of a creeper. They are made in various shapes and sizes. Some are rendered waterproof and used as beer vessels. The following types of basket are in use:

285 285 416 1. *Chinde* (*lukoro*, Chin.): a circular, open basket, shallow and wide, six to ten inches in diameter; it is used as a food dish or to winnow flour, etc. *Chitungu* (*usungwa*, Chin.), a rather larger one of the same shape, often decorated with beads is used to carry flour, while a still larger basket called *ukyuta* is commonly used by the women for winnowing and the shell from the partly pounded maize (Pl. XVI, figs. 11, 12).

2. *Lulembela* and *ukitumbe* (in Chin., both are called *usungu*): deep baskets usually about as deep as they are broad, the bottom is approximately square, but the rim is circular. *Ukitumbe* is about six inches high and six inches in diameter; *lulembela* is about a foot in all dimensions. These large baskets are used for carrying any foodstuffs in bulk, e.g. grain and pumpkins (Pl. XVI, fig. 10).

(Fig. 10), and an antelope from Mysur's in Bonito district (Fig. 11), also two birds at Pinnel's which I should think represent a bird and a snake (Figs. 12, 13). It is interesting to compare these attempts which show a natural feeling for shape, with others, the work of an Aspend youth in bonds with a Sawyerne mission station, who depicts the mission, his donkey, his dog, and a chair but with little or no sense of form. Note the dots above the animals' backs which represent their hair seen from the other side (Pl. XVIII, figs. 14-16).

The models of animals and other objects made in relief on the ground at Lepanda, and of animals in grass and bamboo at Chipata, are referred to under *Initiation Ceremonies*.

Decoration is limited to the making of patterns of geometric design on many household articles. The grooving of pots is mentioned under *Pottery*: gourd vessels sometimes have lines and triangles cut on the surface; ivory bulb handles may have concentric circular grooves on them, the same being true of ivory nose-rings and necklaces. Spear handles and walking sticks, snuff-boxes, pipes, the head-rest and the necks of musical instruments too, are commonly engraved with designs. The wooden rim of the mbangwi basket is always so treated. A series of these designs from baskets is reproduced (Pl. XVIII). Occasionally geometric patterns are painted on the walls of huts. The best example I have seen is shown in the photograph which represents a Mohammedan mosque in South Nyasa district. This, I think, gives the key to the origin of these geometric patterns, namely, Swahili influence among the Yao (Pl. IV, fig. 1).

Personal ornamentation. The skin color admired most among the Yao is a rich brown and is likened to the color of the antlipod, *Kimpala*. A very black skin is not liked and a man is said to be "as black as a crow." Very light colored skins are equally disinclined to some and considered to resemble the color of a wasted corpse. The hair should be jet black. Young men anoint their heads with a decoction of mondongo pods in boiling oil to make the hair black and lustrous. When the hair is turning white, a substance made of the charred roots of a plant called *chinyjo* is put on to make it black.

Native magpies that some among them have red hairs on their heads or in their beards, and such a man is called *mutumu*, *mutumu* being the name of a mongoose which lives on the mission tree and is covered with long red hairs.

The old men used to wear wigs, *chitindi*, made of knotted string blackened and oiled to look like hair; the women wore one called *chikwan*. These were used to disguise greyness or baldness.

The women sometimes let the hair grow long and then thread beads on strips of it. This fashion is called *chinyao*. The large red bead, *chikidiki*, is now used for the purpose. This fashion was adopted by the old women and there is charge of the *Chipata* ceremony. Strings of beads threaded on the hair falling down round the head are called *Shanbala* or *mdumbula* (plur.). Women sometimes thread beads on the crest of hair called *mkwela*. Ordinarily the hair is periodically shaved or sometimes cut with a knife, but the process is painful and therefore unpopular.

4. Dianoue D-5 (ca. 1989)1910 ३२२ Yao ३२२
Marsoli पेंग

Journal of the Royal Anthropological Institute, Vol. 53, 1923, Plate XXVIII.

[p. 339(8)]

and the feature of it was the introduction of life-size representations of animals made of bamboo and grass with men inside.

I saw new dance at a successful ceremony among the Awisa (p.).

12. *Ifiala.*—Women only present; danced on the occasion of a girl's first menstruation.

13. *Lilwa.*—Women only, on the occasion of the quickening with first child.

14. *Ifiyala.*—Men and women, a quick shuffling step while standing in a circle.

15. *Sakwa.*—The lady dancing (*Mwalwa*) dance of boys, they walk round in a ring some fifty of them, the drums in the middle; when the bass drum beats into a quicker time they all start shaking shoulders and bodies with intervals for two or three steps.

16. *Kanyin.*—Danced in a circle, men and women alternately.

17. *Mwala.*—A big dance with small circles.

18. *Chilulula.*—Dancing boys dance.

19. *Mfwenza.*—(1907) men and women; each carries a large mat filled with pebbles—as drums.

20. *Mwapanji.*—A mask dance; palm leaf bags filled with pebbles are tied on the legs.

21. *Sanja.*—A pas-de-deux, each man with a rattle and hand-drum; for a few moments they wander round each other pitting up the time and tune, and then jump into a very fast step dancing and jumping into the air shaking the rattles.

22. *Chimwimbwimbi.*—A pas-seul by a man carrying a whistle and bow with rattles of small shells.

23. *Mwawa.*—Danced on bangas. At Mpanda's village a big sacred mat is danced with drums round the bites and rattle rattles; in their hands they carried five snakes which had been rendered harmless by putting rattlesnake over their bodies before digging them out. Four drums as in *chimbimbe* were used. The women all had swap.

Description of Plates.

Plate XXVI.

1. Gun-rifle with bamboo butt.
2. Lead pellets of "rattlesnake."
3. Gun-bullet.
4. Shell-rattle.
5. Medical symbol disc.
6. Tortoise-shell containing "rattlesnake."
7. Tortoise-shell.
8. Horn containing "rattlesnake."
9. Dead snake.
10-12. Contents of the bag of an Ilwa man.

Plate XXVII.

1. Small mat, Tao.
2. Shooting-pouch.
3. Mabanja.
4. Small rattle, Tao.
5. Gourd for sacrifice bite.
6. Jewellings.

G. Dennett.

[End Plate 4]

[illegible]

[illegible]

[illegible]

[illegible]

[End Note 2]

[End Plate 15]

[End Plate 17]

The chief, having appointed a day on which the ceremonies shall begin, sends a messenger with a bowl to a medicine-man whom he asks to conduct the ceremonies. The medicine-man is called a'mbiddo "he of the tails." He carries his medicines stuffed in the tail-skin of a gnu or zebra and we shall see that his tail or tails play a very important part. Having sent word back to the chief of his acceptance of the invitation, he goes his wife to prepare some fresh medicine-oil with which he will consecrate his medicines, and sends out the boys of the village to collect firewood. A big bonfire is made and dancing goes on all that night in his village. Early next morning he returns to the door of his hut where his wife hands him his "tails." He then immediately departs for the village of the chief. His wife bills with her tongue, this being the sign of his departure, and dancing men, some friend (often his brother) who acts as his chief assistant, his wife, and others will go with him.

He signals his approach to the chief's village by singing:

"Ka [illegible] [illegible] [illegible]" "Tan at the village!" "[illegible] (I don't be long)!"

As he nears the village, all the women hail his arrival by billing the tongue (ko-kokoo). He goes straight to the open space in front of the chief's house where the chief meets him. The chief immediately goes into his house and producing a cloth, gives it to the a'mbiddo who then places his "tail" on the ground, (mbiddo, "things put down"); these are the signs of the compact. A house is given to the a'mbiddo wherein he may rest and sleep.

That night, all the mothers of the boys who are to undergo their initiation, now called mali (dog, mouth), pound flour for the morrow. Early the next morning, the a'mbiddo visits the place where the pounding is going on and collects a little flour from each woman's basket into a small basket he himself carries.

The chief then gives him a cock and a hen, an ass and a hoe; with these he goes off accompanied by the halves of the cock to the spot where Lepanda will be made. Arrived there, he first points out the spot where his ass hut is to be erected. This is quickly built, followed by the shelters for the cock.

The cock and hen are then killed and cooked, also some porridge; the entire food is cooked; the liver is not cooked separately. When it is ready, the a'mbiddo takes a piece of the liver from the pot and some porridge from the other pot together in one hand and then throws them into a little hole where his "tail" has been resting. At this spot, Lepanda is made. The a'mbiddo then partakes of both again and eats; after he has finished, the other men eat.

After the building of the shelters is finished, fire-wood is collected. On the ends of the green shelters figures of animals in grass may be strung up on poles, but they have no definite significance.

In the meantime in the village, the chief has had ebiyani (ceremonial flour) prepared. It is made from millet by his head wife, who must not be near a menstrual period.

two feet high and fifteen inches in diameter, hollowed out from above for about two-thirds of its length. Many are made with a kind of loom or stand, and some have roughly carved lions on the outside; these are called "the lionsts," doubtless antiquarians of women, a large part of whose life is spent in preparing flour (Pl. XV, fig. 16).

The fire-stick. Matches are becoming more widespread year by year and soon the knowledge of how to make fire with a fire drill will be lost. The method employed among the Tuc is as follows: a flat surface is cut on a piece of partly rotted wood. In the middle of this a small depression is made, and on one side of the piece of wood a groove is cut leading from the flat cut surface. The piece of wood is held firmly on the ground by one person with a piece of old scoured cloth or some charred sticks at the base of the groove. A second person, by rolling a stick of hard wood rapidly between his hands with the point directed against the depression on the flat surface in which a little sand has been placed, drills a hole into it. The heat developed is sufficient to cause the powdered rotten wood to start smouldering. This is then turned out on the cloth, which is gently waved in the air till it catches fire (Pl. XV, fig. 16).

Boats. With the exception of a small coracle-like vessel, *Mangpan*, made of rough bark and used for crossing streams, the Tuc have no boats. The dug-out canoes which they use at the present day are made for them by the *Anyanja*. In addition to the bark boat, they use a kind of raft made from the pith tree, *Sangan*.

Tobacco. The use of tobacco in some form is universal among the tribes of Nyanland and the Tuc are no exception. The method of use varies among the different peoples; smoking, chewing, and snuffing are all practised, but while the *Anyanja* is essentially a pipe-smoker, the Tuc takes snuff, although I think only lately he has also taken up smoking and chewing. A short time ago, a Tuc who chewed would have been laughed at. The *Anyanja* do not chew but take snuff to a certain extent; the *Angoni* who do not smoke or chew are inveterate snuff-takers; the *Atumbuka*, *Atonga*, *Ainaga*, and *Ankonde* are pipe-smokers and to lesser degree snuff-takers.

Tobacco is called *nwa* (Jaffa, Chin.). It is prepared by sun-curing the leaf, which is then rolled up into a twist and allowed to dry further. The common tobacco pipe consists of a clay bowl, often ornamented, and a reed stem; it was formerly called *ulidonge*, but is now known as *kalu* (Pl. XV, fig. 11). For bamp, chewing, the Tuc use a water pipe called *ndonde* (*ngonde*, Chin.); this consists of a bamboo water container from which projects a reed stem ornamented by a clay bowl (Pl. XV, fig. 12). The word *ndonde* is also used for a tobacco pipe.

When tobacco is chewed, a little lime paste *nsolude* made from snail shells is put in the mouth "to bring out the flavor," a small clay jar being used to carry the *nsolude*.

Both the Wapoto and the *Anyanja* prepare snuff by grinding the broken-up tobacco leaves with a stone in a pestle; the powder is then turned out into another shard and roasted over a fire. A few drops of a preparation called *mapuli* is added for flavor. *Mapuli* is

[illegible] as one will break. With the exception of marine birds such as the stork and the heron, most birds are considered fit to eat. The hornbill is not eaten, as it is supposed to carry part of a corpse on its nose.[1] Fowls form a regular article of diet, but some taboos in this connection are mentioned elsewhere.

Eggs are eaten only by children and old people; that is, by those outside the child propagating age. Milk is never consumed in any form. They say, "What a disgusting habit, to suck the juice of an animal while it is still alive!"

Pregnant women will not eat certain things lest the child be born with some deformity, such as the snout of a pig, or the white stripes of a zebra.

Art and decoration. Sculpture can hardly be said to be an art known to the Tuc. The only piece of stone work I have ever seen was a gnomic boulder, on the surface of which cup holes had been made for the game of *Bao* (Pl. [illegible], fig. 4).

Of late years, individuals here and there have begun carving wooden figures of men and animals. The Tuc, of course, make no idols. It is uncertain exactly how long it is since any of these people started producing wooden figures. I should think that this art has sprung up within the past twelve or thirteen years, that is to say, since there has been a market for them among European residents. In the first place only native and some of the common animals, the shoat and leopard, were represented; since then, many animals and Europeans have been copied. The native is extraordinarily clever in reproducing characteristic features in drug pots, so that a Portuguese is easily distinguished from an Englishman. The little models in ivory of animals and native household objects, made by the Dwalali people on Lake Hyam, have never been copied by the Tuc. Neither do they make clay images of men and cattle as do the Zulu-descended Angoni and cattle-keeping Wandonde. No native would allow any wooden figure to remain in his house for fear of ill luck; the women especially would look askance at them, fearing some misfortune to their next pregnancy. Little wooden figures of birds, however, are sometimes seen affixed to the point of the hut roof.

The making of carved figures, then, is of recent introduction, or rather is a recent result in the evolution of the Tuc, as they were not taught but self-inspired in the work.

The ability to make representations of objects by drawing appears in the same way to originate spontaneously here and there on a spot. Natives with a talent for drawing are found among all the tribes, and among the Tuc, it is said, there have always been some who have been able to draw. Naturally enough, their representations are made on the walls of their houses, and their subjects are generally animals of the forest, sometimes men and women, or some other objects of particular interest.[2] (Pl. [illegible], fig. 1). I also give sketches of some other drawings I have noted (Pl. [illegible]): the line figure of a man at Mukangila's

[1] Nilo-supra, p. [illegible].

[2] Cf. A. Werner, "A Native Painting from Nyasaland," [illegible], London [illegible], vol. [illegible], no. [illegible], p. [illegible].

(fig. 14), and an antelope from Mpowo's in Bombo district (fig. 15), also two birds at Pimol's which I should think represent a bird and a snake (figs. 16, 17). It is interesting to compare these attempts which show a natural feeling for shape, with others, the work of an Acholi youth in touch with a European mission station, who depicts the missionary, his donkey, his dog, and a chief but with little or no sense of form. Note the dots above the animals' backs which represent their hair seen from the other side (Pl. XVIII, figs. 18-20).

The models of animals and other objects made in relief on the ground at *Lapondo*, and of animals in grass and bamboo at *Chopola*, are referred to under *Initiation Ceremonies*.

Decoration is limited to the making of patterns of geometric design on many household articles. The graving of pots is mentioned under *Pottery*: gourd vessels sometimes have lines and triangles cut on the surface; ivory hair bandles may have concentric circles graven on them, the same being true of ivory pore-clips and earrings. Spear handles and walking sticks, snuff-boxes, pipes, the head-rest and the necks of musical instruments too, are commonly engraved with designs. The wooden rim of the *ntongwi* basket is always so treated. A series of these designs from baskets is reproduced (Pl. XVIII). Occasionally geometric patterns are painted on the walls of huts. The best example I have seen is shown in the photograph which represents a Mahammedan mosque in South Nyoro district. This, I think, gives the key to the origin of these geometric patterns, namely, Swahili influence among the Tuc (Pl. VI, fig. 1).

Personal ornamentation. The skin color admired most among the Tuc is a rich brown and is likened to the color of the antlopod, *kipagala*. A very black skin is not liked and a man is said to be "as black as a bean." Very light colored skins are equally distasteful to some and considered to resemble the color of a wanted wife. The hair should be jet black. Young men anoint their heads with a decoction of *nandungu* pods in boiling oil to make the hair black and lustrous. When the hair is turning white, a substance made of the charred roots of a plant called *ekinyo* is put on to make it black.

Native magician that some among them have red hairs on their heads or in their beards, and such a man is called *nakimoro*, *nakimoro* being the name of a caterpillar which lives on the *nimoro* tree and is covered with long red hairs.

The old men used to wear wigs, *ekirwyi*, made of knotted string blackened and oiled to look like hair; the women wore one called *ekikoro*. These were used to disguise greyness or baldness.

The women sometimes let the hair grow long and then thread beads on wisps of it. This fashion is called *ekinyo*. The large red bead, *ekiduku*, is now used for the purpose. This fashion was adopted by the old women and those in charge of the *Chopola* ceremony. Strings of beads threaded on the hair falling down round the head are called *kimbuka* or *nakimbuka* (plate). Women sometimes thread beads on the crest of hair called *nakoko*. Ordinarily the hair is periodically shaved or sometimes cut with a knife, but the process is painful and therefore unpopular.

532

142
291

1. Native painting on the outside of a mud wall.

2. A Yao native.

142
302

3. Mazembe Yao native.

4. Mazembe Yao native, showing lip ornament of bone on the forehead.

[End Plate 8]

[Exod Plate 10]
[Explanation of plates, cat. 116, p. 265]

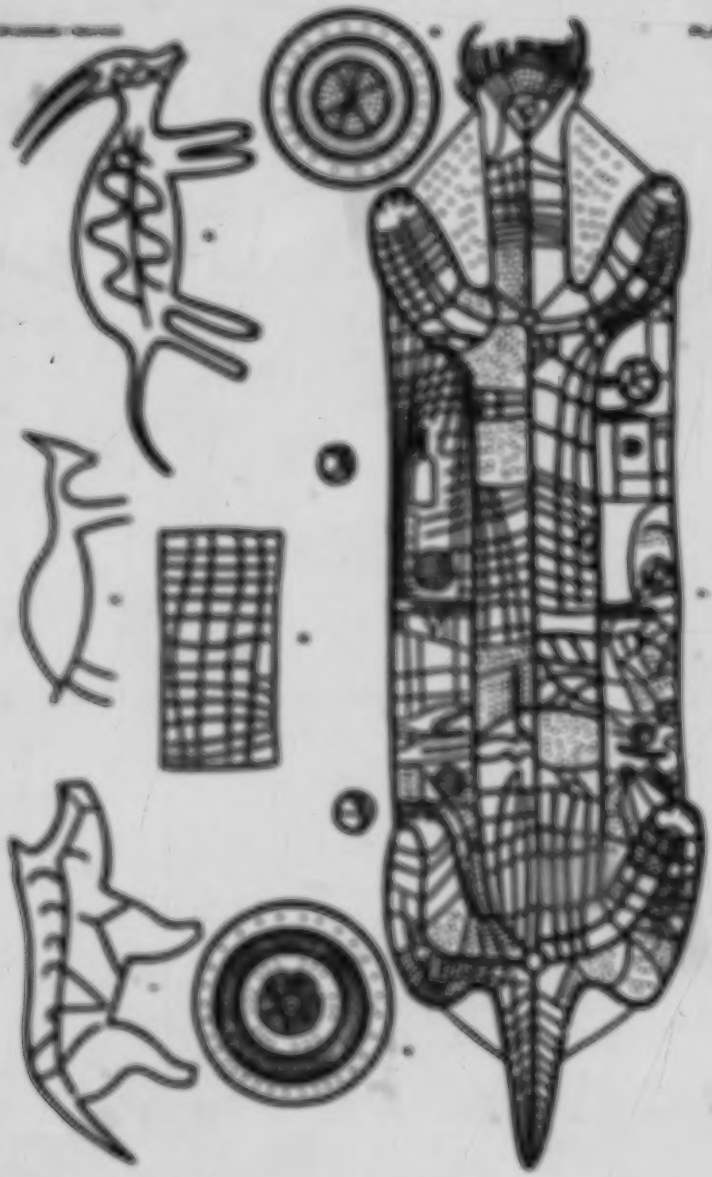

[End Plate XI.]

[For Plate Explanation, see cat. 116, p. 261]

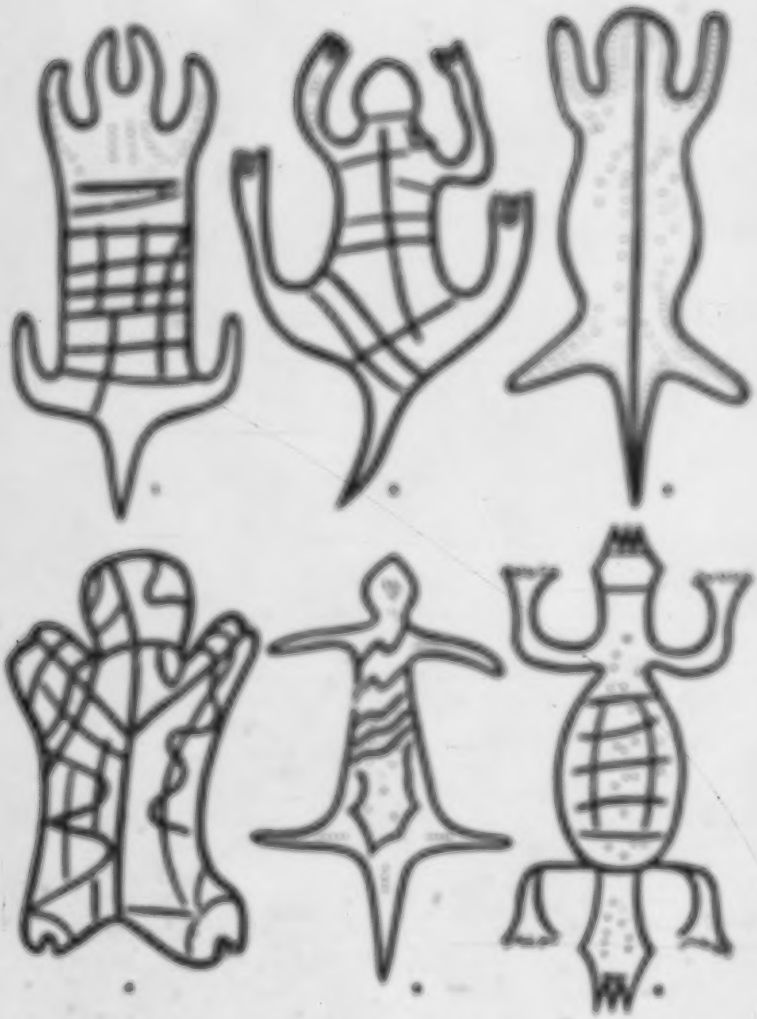

[End Plate 13]

[For explanation, see cat. 86, p. 265]

[Final Plate 13]

[For explanation, see cat. 116, p.265]

[End Plate 18]

2: Mitchell E-5 (1946-1949) 1956 FTT Yao FTT

vomited human flesh.[1] They said that they had a strong headman and that they could trust him; he was a good headman without witchcraft. If he had been a sorcerer they would have kept scolding him until the next morning.

About two hours after sunrise the people gathered and started dancing. At about this time Cimombo was brought out of the hut and put in the grass shed which had been built for the occasion. This was the climax of the ceremony.[2] He sat on a chair in the grass shed with one of his two wives on either side. Mikoka then started a chant, exhorting the visitors to come to throw pennies at Cimombo's feet. Some of the people there made speeches about the type of behaviour they would expect from him. Then Nyambi arrived from the court village in a rickshaw. When the noise had subsided he told the people that if they disobeyed Cimombo it meant that they disobeyed the chief. He emphasized the importance of the rank of the new headman. After the speech he presented 12s. to Cimombo which was received on his behalf by Ncimbo. Nyambi then left and the ceremony was over, but the people remained to dance and drink beer.

This description of the procedure following the 'coming out of the hut' is somewhat sketchy. The interaction of the headman and his villagers on this formal and ceremonial occasion is of great interest and importance. During the entire ceremony the headman adopts the pose which is appropriate for any Yao initiand. His hands are on his lap or on the arms of the chair and his head is bowed forward with eyes downcast. He neither speaks nor moves. His attendants, when necessary, wipe the sweat off his face or chase away the flies. The other occupants of the mat, who may be his wives, and sometimes his heir, adopt similar postures. In contrast to this, is the behaviour of the villagers who run about shouting wildly, the men discharging muzzle-loading guns, and women ululating in the typical Central African way.

Before the new headman comes out of the hut his mentors

[1] This is a test based on the witchcraft of the Yao, who believe that sorcerers kill relatives with magic and then share out the flesh of their victims with fellow sorcerers in ghoulish feasts.

[2] Called the 'coming out from the hut' (*kulupoka nyumba*). It is of course the first public appearance of the headman in his newly assumed status.

2: Mitchell E-5 (1946-1949) 1956 FTT Two FTT

632 impress on him the difficulty of his position, and when he is
633 taken outside some of this is repeated in public. At Nkaotenga's installation ceremony in December 1946, which I attended, the following incidents took place. Shortly after he was taken out
632 of the hut, Cigunda, one of the officiating headmen, said:
633 "Younger brothers of Nkaotenga, are you happy that Kanduli[1] has an elder brother? You women, have you cooked beer so that you can have your village headman?" In reply the men and women clapped their hands and a few came forward to throw some coppers into a cloth at Nkaotenga's feet. Cigunda went on to say, 'From to-day no woman will be impudent to the chief, because you are all of the same womb. All you men listen, only this man is your village headman!' Cigunda now turned to Nkaotenga who did not change his posture in the least. 'You village headman Nkaotenga, don't listen to what your wife says, because she will fight with your sisters and tell you that they have been cursing you. You should make enquiries when you have heard these things because you are a big man [i.e. important headman]. From to-day onwards you are a big man. Every person will be trying to spoil your name by saying that you are a bad man. You need to be patient and easy-going.' Turning to the public, Cigunda said, 'Even you husbands [*akamwini*] do not listen to what your wives say if they try to undoce the village headman, because some husbands can break the village.' Thereupon one husband got up feeling around for a penny, found he did not have one, and with much ostentation borrowed one from a fellow-husband sitting next to him. He then came forward to where Nkaotenga was sitting and said, 'You say some husbands can break a village. Is that true? But husbands build the villages? They can't break the villages.' Then very deliberately he threw the penny into the cloth at the headman's feet and went back to his seat. His speech was greeted with acclamation from the husbands. Cigunda said nothing after that and the ceremony was over.

632 In September 1948, during the installation ceremony of Mapuza,
633 one of Kawinga's less important headmen in the northern part of his area, the significance of the relationship of the headman to his relatives for the continuation of the village as a whole, was brought out more clearly. After the headman was

[1] A personal brother of Nkaotenga.

2: Mitchell E-5 (1946-1949) 1956 FTT Yao FTT

brought out of the hut, as always, songs were sung and speeches were made. One of the songs was: 'A tree when it grows, grows with its branches.'[8] This is a reference to the dependence of the village headman upon the increase of his relatives for an increase in his rank. The Yao compare kinship with a tree, the component segments of the matrilineal lineage (the tree) being the branches. Then one of the officiating headmen mentioned that there were many sisters' sons of the old Maputa but that Kawinga and Chiwalo had selected the one on the chair to be the headman. He then exhorted the others neither to be jealous nor to resort to sorcery, but to exalt the name[9] that it might live long. This was followed by a song which introduced a second theme, 'A husband however rich he becomes here, cannot climb high.'[10] This song emphasizes that the uxorilocal husbands of the village can never achieve rank outside their own matrilineal villages however rich they are. The officiating headman then went on to say that some women rebuke their husbands when they speak subversively, but others side with them against the village headman. He told the husbands and women that they were wrong to do this and that they must desist. After this followed a public rebuke of the village as a whole. One of the younger brothers of the new headman pointed out that when the mother of the previous Maputa had died she had been buried in the graveyard and not in the village. He rebuked the villagers and told them that, when the present chief died, he should be buried in the village. A man who had been charged with neglect by his wife (his cross-cousin) paid the headman the compensation which he had refused to pay to her. One of the headmen then exhorted the villagers to respect their headman; to send someone to accompany him on his journeys to see to his wants; never to allow the headman to carry a gift he had been given, and so on. The ceremony ended when Kapalowa, who was representing the chief, hinted that Maputa might be allowed to wear a scarlet headband in the near future.

Village headmen represented the chief at Nkaccleng's and

[8] *Mtwa pankhala akwa ilimanyanki.*

[9] *Kwenya lina*—to come the name to climb.

[10] *Tonde, mnde, mkamwini nanilile mnwe ngakwede ini.* Tonde is the word for billy goat and its use here emphasizes the procreative functions of the husband in the village.

L-Document B-5 (ca. 1910) 1922 P?? Van P??

When the sun sets, all the boys to undergo the ceremonies (mali) together with their sponsors or guardians, shamans, (ishamans' dog,) are called together to the village open-space (pang'ungu). The ishamans attends his ward throughout the ceremony; he may be an elder brother, an uncle, or someone else who volunteers for the service.

The mali are lined up and headed by a "leader," mulilongulu, who is usually the most important boy, perhaps a relative of the chief; then they pass one by one in front of the chief who anoints each on the forehead with ulupwi from a small basket. As each boy passes, his mother runs up and throws into the basket a string of beads or nowadays small silver coins. When all have passed, the chief sends some near relative with the basket still containing some flour and the beads or money to the n'mitchilo who is waiting at Lupanda.

This is his signal to prepare to receive the mali; he dresses, and accompanied by drummers goes to meet the file of mali. The mali accompanied by their shamans, their mothers and sisters, sing as they approach:

"Tunje lunga (ungupi) ulukuli ungu!"
"Let us go back, perhaps there is no ceremony!"

The n'mitchilo as he meets them sings:

"Ambiki! pakwiu ame wamuki'ne kulala Ilunda lwiu uulupi!"
"Why to come with them these children to have (a small drum) to come with it!"

and follows this in answer to the song of the mali with:

"Ku ulili ulungu, (Response) Kwa lwa! (Chorus) Ilungu uuu!"
"To the village don't go back. Don't go back all!"

The mali now on the outskirts of Lupanda are formed into a ring, behind them their shamans and behind them their mothers and sisters. Then the n'mitchilo leads the way to Lupanda singing:

"Lilunda lya ulunda!"
"Space of an elephant!"

Next, he calls all the mothers to form in two lines resting at right angles on Lupanda and sings to them:

"Lupanga lulu pasi lwula'wa lwangali ulungu!"
"The angle lighted on the ground as in the air there is not some relationship!"

The n'mitchilo and his chief assistant each provided with a "tail" strike lightly on the basket which each woman has on her head; then each with a hand on the basket, they lift it down to the ground. Starting with the mother of the "leader," they go round to each mother in turn. The n'mitchilo then to the sound of drums and clapping by the women dances and runs round peeping into each basket exclaiming, "I see so and so in this basket!" naming cows, goats, medicine, women's pedands and so on, after which the women take the baskets of food away to the boys' shelters. The n'mitchilo next sings:

S-Steamer D-S (on. 1903) 1952 3'77 Use 3'77

"[illegible] messenger, he [illegible], [illegible] [illegible] messenger!"
"I will go and bring my child - he [illegible], where I am going home. I had [illegible]!"

[illegible] 513 514

and running round he seizes hold of one of the mat and swings him sit down at [illegible], continuing this until he has placed them all in a circle round [illegible]. He then sings a song about the little basket which the chief sent him containing the remains of the whipped fowl:

"[illegible] [illegible] [illegible], [illegible] [illegible], [illegible]!"
"Little basket the owner asks for it back, give me [illegible], [illegible]!"

His wife who has been waiting in his hut nearby brings him the basket. Holding it in his hands, he prays to the spirits of his ancestors and all the previous ambidos-men to whom his ambidos-tails have belonged, invoking their aid that they ensure may go well.

Still holding the basket he begins to dance, singing:

"[illegible] [illegible] [illegible]!"
"Let them (sc) enter fowl [illegible] (Let us baptise them)!"

and dipping his right elbow into the basket he smears each small on the forehead with the whipped fowl. He then goes into his hut and fetches a bundle of powdered roots (which no woman may touch), ambidos called ambidi, that is, a ambidos used for its aphrodisiac properties. Holding the ambidos between the palms of his uplifted hands, he starts singing:

"[illegible] [illegible], [illegible] [illegible]!"
"I cannot find not love to make this, we find (with) my brother-in-law!"

He is immediately surrounded by his assistants and the drummers, who dance round him, all holding their hands about his arm, after which he unbinds the bundle of ambidos and puts a little on the tongue of each small, beginning with the leader. He then takes some sweet-beer made by the chief's wife and pouring it into his old ambidos-gourd, he mixes in some ambidi and gives some to each small to drink after which he sings:

"[illegible]! [illegible] [illegible] [illegible] [illegible], [illegible] [illegible]
"I've have drank a mixture of water and ambi fowl, of eating eggs
[illegible] [illegible], [illegible], [illegible] [illegible] [illegible]
you stop now, you have drank (but) I have passed water (in it),
well(,)! [illegible]!"
you thought to be chief!"

[300] Next he goes into his hut with the small basket containing the whipped and points his assistant with the fowl, a semicircle round the forehead, a line down the middle of the face, a band across the chest, a line down each arm with rings round the arms and forearms, and a line down the middle of the back. They go out again into the ring and while the m'middle sings:

* This may be a reference to smoke, the mythical way.

"[illegible] [illegible] [illegible] [illegible] [illegible] [illegible] [illegible]"
"The [illegible] [illegible] [illegible] [illegible] [illegible] [illegible] [illegible]"

The assistant with the basket held in his mouth acts the part of the mangaye, a medium-sized lizard with brilliant blue body and orange head which bobs its head up and down. The assistant lies on his belly and bobs his head and shoulders up and down, lifting himself on his hands. (Children often clap their hands as they watch the mangaye bobbing up and down "like a bi-motor" and call out to it to cast lots for them.) The assistant then crawls up to the healer and puts the basket on his head. Bowing his face to the ground for a moment, he again takes the basket and places it on the head of the next recruit and so on all around.

After this the said go and sit near the bonfire which is not yet lighted, while the o'wichile sings to the women:

"[illegible] [illegible] [illegible]"
"The bonfire Let him [illegible] a [illegible]."

and the women give him a basket of leaves with which he makes sifting movements, singing: "Shall I throw them away, shall I put them in the cooking pot?" while the women sing.

His assistants are then told to go and light the bonfire. He himself goes to his hut and places his "talk" in the whisper basket, and carrying it to the bonfire, he throws some of the fire on the fire, "to regulate the heat." This is the sign to begin the dancing which goes on all night while the pot is round the fire, each lying with his head on the waist of the next, the leader in front.

In the early morning of the second day, the o'wichile holding his "talk" in his hands runs unintelligible over all the nothing well and facing the same way, runs back, after which the boys are called.

He sings a song:

"[illegible] [illegible] [illegible]"
"The red ants [illegible] [illegible]"

and he pretends to pick them off the boys. After this, he sings:

"[illegible] [illegible] [illegible] [illegible]"
"Pick [illegible] [illegible]"

as he goes to each recruit and throws his "talk" into the boy's hands, receives it back and then puts it on his head till the mother places a coin on his head which is the payment made to the assistant. *Ko-bayan* = to enter; *ngabayan* = not at home; *ndabalayan* = is it not at home, is it not present? The meaning of the phrase in the song is, "Is your mother not here to pay the fee?" *M'bababayan* is a pun on *ndabalayan*, "little mother." This is followed by another song:

"[illegible] [illegible] [illegible] [illegible]"
"The little house, [illegible] [illegible] [illegible]"

[illegible] as he climbs a tree with his back to the trunk; at the top he hangs by his legs and looks down on the crowd, his assistants doing the same. Coming down he runs to his feet, throwing his "tail" into the air and catching it again, he retires.

[illegible] This is about also c.o.; all sent till about dawn o'clock, the will assemble using food cooked by their mothers in the darkness. About dawn o'clock, the o'mitchi takes a big gourd and putting his "tails" into it covered with a white cloth, gives it to his assistant who carries it on his head and follows him to a pool of water, accompanied by all the women except very young men who have not borne children. The brother then to go " such hunting."

At the pool he enters the water with his assistants round him, except the assistant with the gourd, who stands on the bank. The o'mitchi makes movements as of hunting for game in the water singing:

"Chumangala [illegible] [illegible] [illegible]"
"There must be hunting otherwise I should have had to not prestige [illegible] without [illegible]"

He pretends to catch a crab and his hands are immediately grasped by his assistants in the water who all help him to convey it to the gourd as the " tail " is taken out of it.

[illegible] The crowd then returns to Luganda to meet the mambunde ceremony. Mambunde is a representation of an animal made of bark on a frame work covered with wool and painted with four in spiral markings, hence the name (mbunde is a part of a spiral shell from the Zambezi coast much prized by natives as an ornament). The animal is really the white antelope with horns and the o'mitchi's " tails " in place; there is a rear inside it. It is made perhaps a mile away and then brought near to Luganda and placed in a cleared area.

The o'mitchi on his return from crab-hunting has gone into his hut and put on his full regalia; then, accompanied by his drummers, he comes out and is immediately followed by the wall and the rest of the crowd. Knowing where the mambunde will be put, he leads the people in the opposite direction calling out to them to look out for the antelope. They, of course, all look in the wrong direction, so when he knows mambunde is in place, he stands around and sings, " There is the animal!"

In the old days the chief was present for this, a platform being built for him. When the mambunde appeared, he gave his hunters much powder (no bullets) and they shot at the animal. The animal would fall as if hit and the o'mitchi would approach to shake it as his beast, but it would promptly get up and charge, to be driven off by the crowd, whereupon it would run away into the bush.

Lots are then cast by the o'mitchi, using a tortoise shell stuffed with medicine. The wall all stand in a circle with their mothers behind them, while the o'mitchi goes to the leader and throws the tortoise at the boy's chest. If it sticks there, all is well and he proceeds to each boy. Should the shell not stick on the boy's chest, it proceeds 10-back to that individual and he has to be dealt with further. The o'mitchi, holding his " tail," and his assistant holding a horn of medicine, stand back to back, with the boy between

[illegible]

them. They then rub the boy up and down with their backs, after which the unknown [illegible]
throws the horn on the boy's chest. If it sticks, the bad luck is overcome and the women
will call joyfully with their tongues; if it drops to the ground, evil is foretold and lamentations are to the boy's lot as Ungande are whispered round. He is given further medicine
against the predicted evil, but lore will not again be cast about him.

[illegible]
533
539

Next the n'wichile sings:

"Kwakulaku mwaku, mwajile ngwanu, jlu ngwanji
"The one who weeps hate, (you) father is still living, were that I may there-fore,
mwakulaku mwaku, mwajile ngwanu"
On one who weeps hate, (you) father is still living! (Chorus) "*Lwali, jwali!*"

Lwali is a word meaning "shining up in all directions" and refers to the hair.

One assistant holds a pot of water, a second, a leaf of the myombo tree, and the n'wichile a razor. They approach the leader; water is rubbed on the forehead by the first assistant, the second smears the place with the leaf. The n'wichile then removes a little tuft of hair from the boy's forehead and puts it in the boy's left palm, followed by the nail paringe from the left hand, and a tuft of hair from the back of the head. This is done to each round in turn after which he sings:

"Tumuje Kwakumwakulu"
"Let us throw them" (the palm-nutshells, to throw by *ch-ring*)

as he walks round them, after which the boys go to their mothers who are allowed to trim the hair on the forehead in any way they like. This may take ten minutes, after which they return, still holding their hair and nails in their hands. As they return, the n'wichile, throwing his "tail" under the left arm, starts off, all the rest falling in behind him, and then he leads the way into the bush accompanied only by the rest, singing:

"Kwali ku mwaku mwaulji"
"The Kwali make the mwaku tree smooth"

He searches through the forest until he finds *chilulu*, a small dome-shaped ant hill about a foot high. He carries his "tail" under his arm and a reed-buck's horn of medicine in his hand. Arrived at the *chilulu*, he skips the top off the ant hill with the horn and his "tail," scrapes a hole in the exposed surface with the horn, and then smears this hollow with medicine from the horn. The leader then approaches and drops his hair and nail paringe little by little into the hole, followed by each round in turn; each immediately turns about and never looks back on the ant hill. When all have done so, the n'wichile sets the top of the ant hill back into its place, having the "tail" and medicine horn in his exile; he then turns about and becomes the last of the file as they march back to *Lupande* while he sings the same song as before.

This particular ceremony is the most sacred of the Ungande as it is known only to the *wali*. It is the sign of burying the past of childhood. If another n'wichile could find such

a place, he would take part of it and he sometimes said to his own medicine " he make him a more powerful n'nimbin."

On the way back, the n'nimbin takes a piece of bamboo in his right hand and when he comes to a sylvatic sapling, the boys all surround him in a ring; with the " tall" in his left hand he strikes the sylvatic sapling, and as it rebounds, he strikes it with the bamboo; while the sapling swings backwards and forwards, he sings:

> " *Kpawa* *ngamami* *ndwal* *ni* *ngimbin!*
> "Nothing I have struck together the bamboo and the sylvatic tree!
> *Ndimbin!* *ommili* *Ndimbin!* "
> *Sharpen for yourself* "

The n'nimbin takes both his " talls." Holding them in his left hand against the sylvatic sapling, the leafy part of the talls opposite, and in the other hand a stick sharpened with knives, he rubs the sapling at a point just below the " talls," still singing the song given above. The stick is said to represent an axe. After this, he takes a reed axe and cuts off the top of the sapling. Then all the boys seize the sapling and wrench the bark off without cutting it anywhere, while the n'nimbin continues to sing. The bark he puts in his trouser and sings as he jumps about:

> " *Tinjimbin* *pepenjin,* *Ndimpin* *ndimbin* *gulubin!* "
> "I shall fall into the pit, jumping about here and there! "

When they arrive at *Lepumbi*, the n'nimbin throws grass to his own hut to make string from the bark, the boys to the place where *Lepumbi* is made. This is at about three in the afternoon.

When the string is ready, the n'nimbin takes it to cross-roads, plaits it into necklaces, and anoints them with medicine for the soul. On his return to his own house, the mothers have cooked porridge for the boys, and the baskets of food are put ready at *Lepumbi*. The n'nimbin then stops to and sings:

> " *Tulu* *(ngil)* *ndigi* *ommu* *ommu, mungu ndimungundigul* "
> "(A) little mouse (food) many children, mother, all are to be fed! "

As he does so, he takes some food in his hand and puts it into the mouth of the healer, and so on all round, while all the people keep at a distance. Then with a hoe he makes a small mound where *ching'ombo-ng'ombo* will be sacrificed and puts on it a little of the whipped from his house. Here he seats the healer and round him sit all the other men. The n'nimbin then sings:

> " *Tinomdo* *chomo* *chungu* *Ndo kondugi'lo* *chomungulo* *ngomugul* "
> "I will take all heads my today where they go to it seems they will never come back! "

* *Kwada*, to what a hole.

He collects from the boys' necks the beads they are wearing, lifting them off with his medicine horn; these are all his perquisites, to be sent off to his house. He then starts singing:

"*Kuhilongola Lupanda ngoma ngulungwe gulule Jolumungu, mulule*"
"The leader (of) *Lupanda* (is) an animal big worth killing with a spear, tail!"

This means to the leader's relatives that the boy is worth a spear; one is promptly brought and hurled against the leader; the *ni'mbilo* stops up and taking it, hands the spearhead and sends it towards his house. He then sings:

"*Ngulu mali Kalungu kwajuka mali*
"Things which are put to have up against cows. Bile anger cows to have things up against cows
kwajuka kwajuka"
Bile cows!"

The relatives then bring all kinds of presents and lays them against the boys; these are the perquisites of the dancing men. The *mali* go away to eat now with their element behind the shelters. The element tie up any food that is left in heaven, for later use. They then return to the roughly-made *ching'ombang'ombe* where the *ni'mbilo* meets them. The *mali* stand in a circle round him and outside them is a ring, the parents, while the leader is set on the *ching'ombang'ombe* mound.

The *ni'mbilo* sings:

"*Ewanjisi ndungu yu mu'yu kupasi ulumali, mulungu, mulungu*"
"Two of the buffalo hair (it, feathers) on the head you put there mulungu call me,"

as he then goes around and touches each mandi with his "tail." The idea here is that the *mali* with flour on their foreheads resemble buffaloes which have white patches on their horns, and they will therefore be as strong as those beasts in the bush whither they are about to go.

The *ni'mbilo* then runs away to his hut and breaking a hole through the back, makes for the bush. The assistants know this disappearance is the signal of his departure for *Nkhopola*. This happens about four o'clock. All exclaim "*Aumbi!*"; (to exclaim thus is *kwumbira*, "to exclaim with apprehension.") The assistants head off in the same direction, followed by the element and their *mali*, while the mothers of the boys who may never see them again, throw sticks on the path as they run away as the sign of forgetting their sons for the time being.

All the men will also accompany the *mali* until they find the *ni'mbilo*. He having left the chief's basket at *Lupanda* has brought some of the *mkopani* with him in his own basket. One of the men brings a gourd full of water; the *ni'mbilo* pours some of the water into his basket of flour and gives a drink of this first to the leader and then to each *mandi*

881 in turn. After drinking, they sit down while the *n'michila* gives instructions that here they sleep tonight. He takes his basket and starts to run back to *Lupanda*, singing:

[533] 539

"*Ku*	*tunjile*	*pulikiya*	*ushimbuje*	*kutunjiye*	*ku M'unda!*"
"Where	we went to		manure		to *M'unda!*"

Then going to the back of his hut, he enters and takes a piece of bark left there bent up into a dish containing medicine which has been put in by an assistant. This assistant holds in his hand the neck of one of the fowls which was killed at *Lupanda*. The *n'michila* washes his face and chest with medicine to cleanse his eyes and then leans forward to the assistant and bites a piece off the neck of the fowl which the assistant holds out, and eats it. This is *ku-lumiva*, "to taste a small piece," often the liver, before starting to eat the flesh; this is generally done by the most important person. The *n'michila* has been followed by his assistants who do as he has done. They all follow him next round the cooking place for the boys at *Lupanda*, each standing for a moment on the stones which have supported the cooking pots, while the women sit looking on coldly. He begins to dance and the women join in, singing *likwata*. He then calls the parents of the *wali* and leads them to where the bonfire was. There assembled, he tells them they must not bathe, and that tomorrow morning early, porridge is to be sent to the *wali* which must be prepared by a woman who has had connection with her husband and who has not washed her hands; this is supposed to make the boys strong. Early in the morning, the husband, who likewise has not washed his hands, carries the food to the *wali* and personally gives portions to each boy to eat.

881 304 When they have partaken of the food, the circumcision is performed by the *n'michila* who has returned the same morning early. The *wali* one by one, commencing with the leader, go forward a little to the place where the *n'michila* awaits them. Each *mwali* is accompanied by his *nkwawusi* who commonly says, "Come along and you shall eat of the honey made by the bumblebee." Such honey is very sweet and called *mawa*. This refers in sarcastic terms to the pain the boy is about to undergo. The boy squats down, leaning back on his *nkwawusi* who supports him, while the medicine-man, having warned the lad not to cry out, performs the circumcision with a small knife called *chiwanda*. It is a triangular knife with one cutting edge and a handle produced from the opposite corner. Properly the Yao method is, I believe, only to nick the free margin of the prepuce just to the right of the middle line near the frenum, but complete circumcision is now commonly practised, possibly as the result of Swahili influence. In this case, the prepuce is seized and held by the fingers, and division made by a circular incision without using a clamp or forked stick. A dressing of charcoal and oil may be applied or medicine is chewed in the mouth and the saliva spat on the wound and the boy sent on to rest under some convenient tree.

[412] [753]

881 [751] When all the *wali* have been circumcised, they are gathered together in one place and the *n'michila* dividing them into groups, puts on the neck of the leader of each group a necklace made of plaited bark from the *mjombo* tree:[1] these necklaces contain medicine against all evils - witchcraft, attack by lions, etc.

[1] See supra, p. 224.

3:Stannus D-5 (ca. 1912) 1922 FT7 Yao FT7

some sweetener into a big gourd. These his assistants will carry away, together with a hoe, to *Lupanda*, whither the *m'mikhila* now goes to remain while brewing goes on for four days. 881

During their stay at *Lupanda*, the *m'mikhila* and his assistants live on flour and chickens begged from the mothers of the *wali*. On the first day nothing is done; on the second day they begin making the *lupango* or figures in relief of animals, etc., to be described later; *Nanimpunsi* is made this day. On the third day the other figures are made and on the fourth day *ching'undung'unda*. Into the ground where *ching'undung'unda* is made, some of the strong beer, known as *ngongo*, which is added to the flour and water mixture on the fourth day as signified by *ku-kolejola*, is poured by the *m'mikhila*. 273

When the work at *Lupanda* is finished, the *m'mikhila* carrying his "tail" leads his assistants wearing their feather headdresses back to the chief's village singing:

"*Ninguhele* *nkuse* *kungo* *akolejele* *ku* *musi*, *mulungu* *achamasi*
"I must go and see beer perhaps they have mind at the village, ancestors oh dear!
Chilawile *chamajusi* *ngolgo* *ssusa* *ninguwile* *ssisi*"
The going out of a day or two ago if I had not taken tobacco I would have died of hunger!" [533 539]

Arriving at the village where the brewing is going on, the *m'mikhila* takes a cup and putting his "tails" on the ground, he dips into the pot of beer belonging to the leader's mother, pours some on his "tail," and then drinks some. Then he puts more into a gourd, together with some medicine, and going up to the chief who sits in his verandah overlooking the brewing place, he kneels, and first drinking a little himself, he presents the drinking gourd of beer to the chief who drinks and then returns the cup to the *m'mikhila* who finishes it. Picking up his "tail," he then goes straight back to *Lupanda* while his assistants with some men nominated by the chief go round choosing pots of beer in turn. The assistants choose by striking a pot with a medicine-tail. These pots of beer are then put aside to cool, while moderate drinking begins in the chief's house. This takes place in the morning of the day on which the *wali* will return from *Ndapale* to *Lupanda*, and in the afternoon, the people from the village will go out to *Lupanda* to take part in the return. The return is made about sunset.

The *wali* at *Ndapale* are put into their shelters and the doorways barricaded. At sunset or just after, the place is set on fire and the *wali* have to charge their way through the bark of the shelters. They then form in line, wearing a slip of bark cloth round their loins and over this, a kind of kilt called *mapejuwise* if made of frilled-out bark-cloth, or *mujenge* if made of palm leaves. Accompanied by the *akamasi*, they proceed towards *Lupanda*, each carrying a stick of smouldering wood and an unlit torch of bark-cloth. 881 [297]

The burning of the huts at *Ndapale* has been the sign to the *m'mikhila* that the *wali* have left; he puts round his waist a bark cloth belt, *chambe*, and a calico sash round his chest with the ends hanging down behind and on his head he wears the *lisungu* headdress made of the feathers of *chinungu*, the widow-bird. In each hand he carries the tail of gnu or zebra, held right end up, with the hollow end filled with "medicine." Thus arrayed, he goes out 881 533 539

861
533
539

along the path towards *Ndapula*, to meet the *wali*, accompanied by the drummers and all the women, singing:

"*Mahumba* *hwinepula* *mto!*"
"The leaves down the stream!"

When he meets the *wali*, they all throw their lighted torches at him and he flees back to *Lapunda*. The *wali* continue their procession and are brought round to the still unlit bonfire known as *chilungali*.

At the order of the *m'michila*, the fire is now lighted and the *wali* lie around it. The *m'michila* again appears with the drummers, and all the women and other villagers form a big circle round about. He sings:

"*Chombolo* *chilungeja* *mkoja,* *wonda'wo* *chilungajapa!*"
"The (lord) fire is now flaring up people there it is afraid of them!"

Dancing and singing them go on all night while the *wali* lie round the fire where they are allowed to sleep. As dawn approaches, the *m'michila* again sings:

"*Chonda!* *Mwalire,* *amwali,* *Amwaw* *mwanache,* *mkala*
"Please! it is crying, you girl, arrange the child, the girdle of beads round its waist
mwanche *ukapapa!*"
lest there be exposure of the person!"

Amwaw: a woman carries her child bound to her back by a piece of cloth passing under her own arms and tied in front. If the cloth gets loose, she jogs the child up higher on her back as she rearranges the cloth; this is what is meant by *amwaw*.

The *akowani* waken the *wali* as the *m'michila* sings:

"*Kwambaliva* *mtu!*"
"To nose after the scent!"

That is, he is looking about for the *ingapa*. He then leads them off to *nahumpumi*, the whale, the first of the *ingapa*.

I shall first go on with an account of Mlenzale's practice to the end of the ceremony and then discuss the *ingapa* in greater detail.

Arrived at *nahumpumi*, the *m'michila* sings;

"*Nahumpumi* *nalitonda,* *nahumpumi* *anitili* *hankiha!*"
"The whale in the pool, the whale has blocked the ford!"

after which he straddles the head of the whale while one of his assistants does the same at the tail and thus sitting, they do a kind of wriggling dance, singing to the time marked by clapping of hands:

"*Nahumpumi* *ntundumula, ah! ah!* (Repeat) *Apulapula* *wata hundama;* *apulapula*
"The whale showed his back above the water, ah! There it did fall me; there
wata hundama; *Kwa, hwa, hwa, hwa!*"
it did half break;"

The w'mikilo then gets off on the left side, his assistant on the right and they stand in the shallow depressions. The w'mikilo starts asking riddles; he says, "*Ndawi* (riddle)!" and is answered by his assistant "*Jiicho* (let it come)!" Here is one: 881 533 539

"*Kangwe, hapito pasi!*"
"The little mouse it has defeated, it has gone into the ground!"
Answer: "*Mikhipi!* (roots)!"

He then goes round the crowd for the answer—if they cannot guess, they say, "*Ali ungwe,*" "it is yourself (to answer)." There are hundreds of such riddles.

The w'mikilo points to the tusks depicted in the *chinguge* and tells the people, "Long ago this used to be an elephant; look at the tusks." The hump at its back he tells them is the same as *ching'undung'undu* which they will find farther along.

They pass next to *mbunda*, the zebra; a pair, male and female, is always figured.

"*Ajiji ngati mbunda ja mbuje Achimunda! Youpe pahati!*"
"This one is it not the zebra of Mister Mkunda! everything (is) beautiful!"

Sometimes a story is told to show that the zebra used to go to the sea to drink but swallowed the whale, he ran away and came to the country of the python.

Then to *nsia*, the python; he sings:

"*Anamto hunjingi! pawa, ejo! Youpe pahati!*"
"You python come and answer! all (is) beautiful!"

At the crocodile, *ngwena*, he sings:

"*Changwena ulendo, pawa! ejo! ulugwena mungulugulu mani!*"
"Mr Crocodile devourer, he sleeps at the side of the water!"

At *mawi*, the moon:

"*Anawi ulendo, pawa! ejo, mawi!*"
"You moon devourer, !"

Next, they come to *wahala ulawa*, the people drunk with beer. Two men lie on the ground, feet to feet with nothing on; the pudenda are covered with bark-cloth and the whole of their bodies painted with earth and flour to look like two female figures in earth. The song is:

"*Wahala ulawa: hamlale mawali, wahala ulawa!*"
"Drunk with beer: come and see the women, drunk with beer!"

A moral is pointed: the disgrace to a woman who gets drunk, lies on the ground, and exposes her person. As the w'mikilo makes these remarks, the figures breathe stertorously as a drunken woman would. He conducts the wali and all the other people past many of the other images such as *chimi*, *ngulu*, *mbunda*, *mbula*, etc., and only stays at those he considers his own special *ingupo*. The seven specially dealt with by Mkunda were as above together with *mbulayi*, the mbile antelope: [534 669]

881
533
539

"Anambatapi ulumba, pempe pakata!"
"You sable dancit, everything (is) lovely!"

Next comes *chombolo*, the ferry. There is no image but two posts represent the ferry; the *m'wichila* stands on one side of the two posts with his two assistants opposite him, one holding a bunch of leaves, the other a burning log: the first fans the log of the second, using leaves as bellows, while the *m'wichila* sings:

"Ngumba, ngumba, kujikututa, ngumba!"
"The female pudenda, where it pushes itself!"

after which the *wali* one by one are pushed through between the two assistants. *Chombolo* signifies the passage from one part of the ceremony to another; here, from the *ingoge* to *ching'undang'unda*. *Ku-jombolo* = to cross a stream.

As they reach *ching'undang'unda* the *m'wichila* sings:

"Ching'undang'unda nalilombile jingawe ngwe jakupochela wailumba!"
"Ching'undang'unda I have marked out if it were calico distinctive of chiefs!"

One of his assistants is told to go and get a pot of beer. When it is brought he sings:

"Awali, kamemba, nawila kunyuma!"
"You girl, little fly, wash your hands behind you!"

881
533
539
608

This is the sign for the woman who volunteers for the service to the leader, to come forward, followed in turn, as each *wawali* is dealt with, by other women. The woman stands back to back with her *wawali* and they hold hands, while the *m'wichila* comes and pours a little beer on their hands; they make movements as of washing the hands and then separate, the woman rejoining the crowd, the boy standing to one side until all have performed the rite. This woman ever afterwards is treated by the *wawali* as his adopted sister. After this, each *nkowusi* takes his *wawali* into the bush near by and holding the boy's cloth over the lad's head, he waits there for the boy's relatives to come and redeem him with fees. It is a point of honor that as many relatives as possible shall turn out to show that the boy is much liked, this being, of course, so much the better for the *nkowusi* who gets a present from each. The *nkowusi* then uncover the boys' faces and hand over the lads to their mothers who take them away to rest in the shelters.

The *m'wichila*, meantime, has withdrawn to his hut, where all the relatives later collect; he then comes out holding his "tail," singing:

"Kwenda akajoja ukwanangera kupa!"
"Come and bathe those who love to bathe!"

Each adopted sister or woman guardian takes her *wawali* brother on her back and carries him off to the stream to bathe. The woman sets her *wawali* down on the bank and then leans across his back while the *m'wichila* comes along and dipping his "tail" into the

stream, sprinkles the boy on the chest with the water. Then the positions are reversed and the woman receives the "tail" on her chest, after which they plunge into the water and bathe, each pouring water over the other. The woman rubs the boy's back and he in turn shyly rubs the back of his woman guardian. Clothes are not removed. Everyone looks on.

While this is going on, the *m'michila* and his assistants build a kind of fence across the return road; as the people start back, he sings:

"*Mete*	*ukusuma*	*namupewa*	*wakumba masika!*"
"Fire my	they are buying	I myself	they give me the spirits!"

that is "everyone has got to buy from me the gifts I myself have from the spirits." As each woman comes up carrying her *mwali*, the mother runs out and makes a payment to the *m'michila* so that her son may be allowed to pass. The boys are carried back to the shelters where they rest. The mother of the leader cooks food into which the *m'michila* puts medicine; he then gives some to each *mwali* to eat, after which they partake of the food prepared by their mothers, while the *m'michila* goes to the village for the beer drinking, returning in the afternoon. In the interval the dancing men dance *chambe*, etc.

Oil standing in separate basins on the ground has previously been prepared for anointing the *wali*. The *m'michila* takes each basin and passes it across the palm of his hand on which he has smeared medicine, each basin being set down on the ground again. Taking a stick, he smears it with medicine from his "tail," and he dips it into each basin. He then comes with his "tail" to detect any woman who may have had any sexual intercourse instead of remaining continent during the stay at *Ndagala*. He dips his "tail" into each basin of oil in turn and holds it up for the oil to run off. If the oil runs off in a stream, the mother as she stands behind her basin of oil is welcomed as a good mother; if the oil runs off drop by drop, "*ndoli*," the woman is laughed to scorn. Her basin is changed for that of another woman or her oil is thrown away and some from another basin is put in its place so that no harm shall result to the boy.

The *akumusi* then take the boys into the bush near by. The *magajawias* dress is removed, the body anointed with the oil, and fresh bark-cloth dyed black is put on. Little bows and arrows are made of small branches and grass and with these the *wali* shoot as they again enter *Lupanda*, putting the bows down on *ching'undang'unda* to the trilling of all the women present.

Immediately after this, the return is made to the village, just after sunset, the women having been busy gathering up all their belongings, while the boys were being anointed.

Some of the assistants lead the procession, the *wali* following in single file, all much subdued and walking very slowly, dressed in the new bark-cloth round the loins, with many ropes of beads round the neck and body, a headband of bark, and down the back a string of beads to which is attached a tassel. Each carries in his hand a wand about five feet long, *sepepe*, with a pattern burned in the shaft and two rattles, *mawwe*, affixed at the upper end.

881 While the *wali* thus march solemnly along shaking their wands, the assistants begin singing:

"*Ku* *mlango* *aziwiri!*"
"To the gate they have shut!"

[533] 534] to which the *wali* reply:

"*Kusowa* *hushupila!*"
"There is no place where to pass!"

The *m'michila* remains at *Lupanda* till everyone else has left; he then sets fire to the shelters and leaving without looking back, runs to overtake the procession and then leads it on towards the village still at a slow pace, while all around is a yelling crowd of delighted mothers and other relatives and the assistants and drummers, all singing and shouting.

When the outskirts of the village are reached, the *m'michila* halts and waits for the chief to come out and give them permission to enter. The chief brings calico which unrolled on the ground measures the length of the procession of *wali*. Headed now by their leader, the *wali* walk over this calico, while the assistants roll it up behind them for the *m'michila*, as it is part of his payment. Flour may be brought him at the same time, carried by the chief's wives.

At an *Unyago* I witnessed at Kuminama's, the halt was called on the bank of a stream at the edge of the village where a bamboo arch had been erected. The arrival of Chief Malemya at this point with calico and flour was the sign for a demonstration by his young men who ran forward as if in battle, firing off blank rounds from old Tower muskets and executing a kind of war dance.

After the calico has been handed over, the chief returns to his kraal and the procession continues into the village, across the village open space to the fence round the chief's house. There, the *wali* enter by a gateway and disperse over the courtyard where they find [777] their sleeping-mats laid out ready for them by their mothers. The *m'michila* lays his "tail" on the leader's mat to bring good luck thenceforth. With Mlemala, there is no further part for the *wali*, but in some cases they are called upon by the chief to give an exhibition of their dancing and drumming. The *wali* sleep that night in the kraal and disperse the following day.

In the morning, the *m'michila* takes his "tail" and a stirring stick made from a millet stalk with the roots on it, and strikes the ground at points in a row in front of the chief's [223] house. Here the pots of beer which have been prepared are placed in rows, those chosen by the chief and those chosen by the *m'michila*, and drinking commences. The *m'michila*, before he joins in, takes the *wali* to an ash-heap in the village and there sprinkles them with [574] medicine from a grain-mortar after which they go with their *akamusi* behind a house and change into new clothes. They then go and salute the chief by clapping their hands and depart to their villages, duly initiated and somewhat subdued by what they have been through. Their new names as "men" may be given them by the *akamusi* either at *Lupanda* [553] OR after the return to the village.

3: Stannus D-5 (ca. 1912) 1922 FT7 Yao FT7

778 gives an excellent idea of the average figure; it is circular in plan, often with a little hillock in the centre known as *hulumbi kangongoli*, "the hill of debt," and disposed in the quadrants are four depressions.

88| When the *wali* are introduced to *Chinyasa*, they stand round in a circle while the
778 *m'michila* stands in one of the depressions with perhaps two of his assistants in others.
The *m'michila* sings:

●533 "*Nyasa kangongola chinyapwila mwamcha ninyamila kwilumbo, amao!*
539 "The lake enormous was I born child I would have died on the plain, mother!"
Ninyamila ninyamila!"

or

"I have lived by the great lake all my life; I should have died in the plains."

while all three make movements as of paddling a canoe. The depressions are said to represent canoes. I believe this is the recognised form but I have also seen an oblong figure with two outlines of unmistakable canoes. *Chinyasa* is usually found near *nahungumi*.

Chiuta, when represented, stands beyond *mbunda*. It consists of two trenches at right angles forming a cross, which are covered over with logs and earth and the whole outlined with flour in a decorative pattern. The end of one limb of the cross is left open and round this opening a screen of grass is made. As the *wali* approach *Chiuta*, some of the assistants or *akamusi* descend into the trenches for the ceremony. The *m'michila* takes up his stand at the centre of the cross and sings:

"*Chiuta, amao, kwiloli chiuta!*"
"*Chiuta*, mother, come see *chiuta!*"

88| Then as everyone says "Listen, listen!" crying is heard "coming out of the bowels of the
778 earth," followed by drumming and the singing of the *chindimba* songs (sometimes *mkonde* or *masche*); a horn is sometimes heard as well as *kululuta*, trilling with the tongue against
[775] the lips. *Chiuta* is called "the resting place of all departed spirits" and the sounds are said to be the echoes of their doings. The word is not met with elsewhere among the Yao, although it occurs in the Chinyanja and in other languages of this country with the meaning "the heavens."

Chiuta is said by Hetherwick[1] to be "a large fish that forms one of the pictures at the *Usapo*," but I have never seen it or heard of it, and I am doubtful of the correctness of the statement.

778 *Ching'undang'unda:* Dr. Davey's photograph[2] is an excellent reproduction of this figure, which consists of a mound of earth flattened on the top, and decorated with geometric
[531] patterns in flour which extend to the ground. In the centre and at the four corners, so to speak, are implanted billets of wood with decorative lines and dots in black and red on the white wood (Pl. X, figs. 1, 2). The billets are three inches in diameter and project twelve to fifteen inches above the ground.

[1] Handbook of the Yao language, op. cit., p. 141. [2] Op. cit., Pl. III, fig. 3.

881 The evening of the first day is called *lyuwa lya nukuwowi*, or "the day of singing," as singing is kept up far into the night, but the exact significance of the word *Kluwowi* I have been unable to find out.

[515] The second day is spoken of as *lyuwa lya mawuwa*, "the day of washing of hands," (*kuwuwa*, "to wash the hands") when the *wali* are specially instructed as to the necessities of washing hands before preparing food, etc.; precept is followed by practice. The night is spent quietly; for this day's proceedings few people probably will have remained.

On the third day, however, they come back again from their villages in crowds to witness the performance of *uuma*, *lyuwa lya uuma*, "the day of house moving" (*kuuma*, "to change one's abode, carrying goods and chattels with one"). A representation is given of an onslaught on a village by *mamiso* and all pretend to run away carrying their worldly goods with them. The part of the attackers is played by a number of women who, armed with guns and having donned belts and powder horns, rush in on the crowd from the bush and make prisoners of all they can catch. The men are put in miniature slave-sticks; women who are seen trying to run off with a child on the back, one round the neck and one on each hip, are driven as prisoners into a group. When all the noise and fun are over, the prisoners are released. This is often followed by a mock trial. Two women dressed up to impersonate chiefs of rival tribes, argue an old, imaginary quarrel, usually pretending that there has been a raid by one party on an ivory caravan going to the coast, with stealing of the ivory, while the other party in revenge has caught and killed some of the people belonging to the first mentioned. The thing may be kept up for an hour with much talking and great zest, all those taking part being women. Finally each party agrees to give compensation for the damage done; each presents the other with bundles of sugar cane, and friendship is reestablished. That night, everyone again rests quietly.

The fourth day is known as *lyuwa lya kwayunga* (*kwayunga*, "to go round about," referring to the dancing which goes on). Dancing takes place during the day and also the ceremony of *Lakwi* to be referred to later. One of the favorite songs sung this day runs as follows:

[533 539] "*Ndumbe'ji nkumbe'pwipe ewinde mwimwe nkwapwe'pa, ewwe! ewkwenge wpwejimwe!*"
"(Tusk this) a present don't give me free wait for me little girl, dear me! and we'll have some fun together!"

On the fifth day, return is made to the villages. The girl *wali* attended constantly by their *akwawi* then live together for the period of instruction in huts in a special enclosure in the chief's village or in similar enclosures in a number of villages. The *wali* may go out into the village but must go about with bowed head and look no man in the face; they wear bark-cloth called *kiuko* and should they meet anyone, they must pull over their faces the [753] kind of hood with which their garments are provided. They may not share food with outsiders. If they did so, the latter would sicken with a disease called *chiwubulu*.

3: Stannus D-5 (ca. 1912) 1922 FT7 Yao FT7

woman guardian shows to her man red and white beads in her hand and tells him that white indicates health while red means sickness, thereby pointing out to him their deep-rooted beliefs in the diseases associated with intercourse or association with women during menstruation. 881 842

Then follows a test of manhood. The women guardians put little pieces of stick (*lukwi* = sticks or firewood) on their heads and sing: [533 539]

"*Ngempe mkwempe lukwi lwa msuku'chamano lisi!*"
"I must give my wife (when sick) firewood of the *msuku* although it gives lots of ashes!"

What is meant is that when his wife is ill, the husband should fetch the firewood even though he does not know which woods give least ash; the *msuku* tree gives many ashes. The little piece of wood a few inches long with a notch in the middle is then handed to the young man by his guardian. He places it on the ground in front of him, kneels down, and with a small axe he attempts to divide the stick at the notch. If he is successful, he is greeted with cheers, clapping, and much rejoicing. By proving his power to hit straight, he has also established his manhood; it is prophesied that he will soon have children. Should he miss through nervousness, shouts of derision welcome him and his guardian shows her disgust with his performance. If he is a young fellow well-liked in his village, he may be allowed to make a second attempt. After this ceremony, each couple bathes each other in their shelters by pouring water over the head and body without removing the clothes, thus making brotherhood. Forever after the man must treat this woman with great respect, must not address her for some time, and then only after making her a small present.

The woman guardian picks up the two pieces of the broken *lukwi* and on the morning before they all leave *Chiputu*, the mother or sister of the young man gives her a string of red or white beads saying, "These are to bind up the bundle of wood." The man's guardian binds up the pieces of wood with the beads and gives it to her man. When they have returned to the village, they go to the young man's wife and he presents them to her. The guardian, however, steps in and slips off the beads which she keeps, while the wife, pleased at her husband's success, drops the two pieces of wood into the fire.

During the weeks that the girl *wali* remain under instruction in the village, those young men who have been *ku-lukwi* sleep in one big enclosure away from their wives and do not cohabit until after the second return from *Chiputu* is made.

Another *ku-lukwi* test sometimes, I believe, introduced into Yao ceremonies but really one practised by the Mpotola people and not proper to the Yao, is as follows: [177]

The guardian lies on the ground, wearing a small loin-cloth, and holding beads in her clenched hands, red in one, white in the other. Her man standing at her feet, bends over her and projects saliva on to her abdomen through a rolled up leaf held between his lips, at the same time choosing one of her hands. If he chooses the hand containing the white beads, he is hailed with delight as a man indeed, but should he choose the hand containing

the other women joining in the refrain. A number of these songs are here given but each nahanga has her own favorites which she sings. They are only sung at *Litiwa*. 843

Alitete, lisinjemi: alitete lisinjemi; Chorus *Mbirunjirumi.* 843

Now you are clucking before laying an egg. Be content then, you must not be running about any more: (Chorus) Call her back for me. 533 539

Ku-tatera, "to cluck as a hen" comes from *te! te!* the sound of the hen. Another song is:

Atatereje atale te. Chorus *Atatereje.*
You must cluck, cluck, cluck, little mouse.

A set of songs sung by Kuliati are as follows:

1. *Mtwe ngukwala, kumalamba; amao!*
   I have a headache, surely; oh dear me!
2. *Japale, japale, chamanli, kuutuka mwanyama!*
   Startled (like a rabbit), little girl running like a wild animal.
3. *Asungula'wa walapire ulamba!*
   The rabbit they praise for its cleverness!
   Kumbawala ngalakotete kumlemba ilemba!
   He caught (the name of a little bird) and cut his hair in the *ilemba* fashion!
4. *Unaji ndiri jua mtima; ndigamile, Chenjerero apite!*
   I have a good heart; I am contented, Chenjerero has gone!
   Ajigaru mabwangwa, amao! achamao!
   He has taken away all his dancing things, dear me! oh dear me!
5. *Wakwambaga'wala, lawe! nawe atulanjire twalala!*
   Those who are speaking (an exclamation) show us that we may see!
   Mlasi ngatile mbanga, tatemera, chikata, ngalakwe, wajaja; ngalangalakwe wajaja!
   The bamboo has fallen with the wind, they shivered with fear (an alluvial plain), (a thing which is stuck) (well-dressed).

In native songs, full poetical license is indulged in and it is often difficult to give exact translations of them. The first has reference to the woman making a fuss because she feels ill with her pregnancy; this she is not supposed to do. Number 2 refers to the fact that she has a new experience which may cause her to be startled, but she need not fear. In number 3, *ngalakotete* is a bird which has a mark running back on either side of the mid-line of the crown of its head, resembling a method of hair dressing wherein two bands are shaved from front to back parallel to the mid-line. *Chenjerero* (number 4) is the name of a man but this reference is apparently now without point. Number 5 is sung by the nahanga when she hears murmurs of others in the crowd starting to sing other songs; she intimates, "Here are we singing, let us hear you others who wanted to sing; you are probably afraid now." In the latter part of this song, words are made use of which have a slang meaning known only to women. *Chikata* is a woman's slang word for the female pudenda; *ngalako*, 843 539

3: Stanzus D-5 (ca. 1912) 1922 FT7 Yao FT7

843 538 when in child-birth there is delay in delivery it is said of the woman "*Abelelewa*," "she is stuck," from *ku-belelewa* "to be suspended, to be caught by a thorn"; *wajaja*, well dressed, is a slang exclamation meaning "everything, everything is out!" The verse refers, of course, as all obstetricians will recognize, to the moment of crowning of the oncoming head during parturition when it appears to be stuck; then suddenly it slips over the perineum and "everything, everything is out."

843 533 The *nakanga* now gives way to the songs of the other women. In different districts different versions of the songs are sung, but the other women will quickly pick up the refrain of the song sung by a woman who has come in from some distance.

843 After these songs, the *nakanga* instructs the woman and her husband in the care they must take until after the child is born. Macdonald says, speaking of the instructions "but of the quality, we prefer to be silent."[1] What a pity he allows no one else to judge!

The woman is especially cautioned against sitting with her legs crossed; they must be kept apart lest the child in her womb be suffocated. She is also told many useful things concerning her pregnancy and confinement. The husband is cautioned to cease intercourse with his wife or if he has intercourse, his wife may not lie on her back, lest the child be injured.

While this instruction is going on, all the assembled women cook and eat the feast [751] which has been made for them. When all has been said, the *nakanga* anoints the man with castor oil, which has in the meantime been warmed, and ties round the neck of the woman the *litiwe*, a cord made of plaited bark-cloth with a tassel in front; at the base of the tassel white beads are strung for good luck, and at the end of the tassel, red beads are affixed, having symbolic reference to the haemorrhage at the time of childbirth. The woman wears only a strip of calico of two hands breadth called *mletu*. She is anointed on the head, body, and limbs.

The tying of the *litiwe* is the sign for dancing to begin. It is a dance in which women try to excel one another. They come with all their tattoo marks on buttocks, thighs, and abdomen renovated; they wear diaper-fashion a narrow strip of cloth, always black in color, and round their bodies numerous strings of beads. With the beginning of the dancing, their other clothes are thrown off and practically naked, they vie with one other in exhibiting their charms and skill in dancing, which afterwards becomes the subject of much discussion among the women onlookers. "So and so is really too old and skinny for such exhibition," and "So and so has buttocks as flat as a wall," while "Such and such a one is fat and beautiful and dances wonderfully, with such *ebondon*," etc. In front of the woman [431] is set a wooden plate, in front of the man a mat, and on these are thrown donations by the dancers and onlookers, consisting of beads etc., or nowadays pennies and small silver coins to help to pay the expenses of the entertainment and, in the woman's case, to buy medicine which may be necessary should the baby fall ill. When the wedded couple are

[1] *Africana*, op. cit., vol. 1, p. 128.

535 *Ching'wengeng'wenge:* A soloist dances about, playing a single-string viol with a bow as he sings. His songs are all about people, village episodes full of personalities and many witticisms. Kondoni of Malemya's was a well known performer (Pl. I).

533 539 **Songs.** The following are some of the *Chindimba* songs:

1

1st voice. *Kutumbila ayuse nyumba achalende ayuse kunpi?*
To be angry the owner of the house strangers they sleep where?
2d voice. *Kutumbila ayuse nyumba Che Nkoleka tinjiwa.*
To be angry the owner of the house (Mr.) Nkoleka I shall die.
1st voice. *Kumbuya unami wulakwe,*
To ask me to answer lies you.
2d voice. *Kumbuya unami Che Mwenge,*
To ask me to answer lies master,
1st voice. *Alawu tingende ipepo,*
Brother-in-law I will go thus,
2d voice. *Alawu tingende ipepo.*
1st voice. *Awala wanache apile mchikuwa,*
There (go) the children they go on all fours.
2d voice. *Oh lele'jo tinjiwa.*
Oh today I shall die.
Chorus. *Kutumbila ayuse nyumba!*

The burden of the song is: We see we are not wanted here; better we went away!

2

1st voice. *Ah lijuni'we kale kale kupaka takapachaje lele'jo!*
Ah baboon those jumping jumping to enjoy he is going to enjoy today!
2d voice. *Ah lijuni'wewe! kupaka takapachaje wawanache!*
Ah the baboon these to enjoy he is going to enjoy child!
Chorus. *Kulpa mbanda ya nyumu!*
to eat (seed) pods of dryness!

"Seed pods of dryness" is also referred to in a story of the baboon. When he is dozing at night sitting on a tree, he hears a seed-pod in the neighborhood crack, and wishing to mark the spot, so that he may go and eat the seed in the morning, he stretches out one arm in this direction and goes to sleep again, to be awakened by the sound of another cracking pod; whereupon he puts out another limb to mark that spot. Presently, he has all but one limb including his tail set out as sign-posts. Half awake he starts to put out the one remaining limb, and falls off the tree.

533
539

3

1st voice. *Atindili ulututa ngunga pilele ejo wuhuhuwe,*
potatoes guinea fowl oh! thank you you,
2d voice. *Atindili ulututa akundunda atiyuna'we mwanja.*
potatoes they are calling me Atiyuna there is going away home;
Chorus. *Kwunda, ulubulile!*
Remove the hoe from its handle!

The name of any person may be introduced into these songs, sometimes the name of a member of the village or of some person well known in the district. To introduce a name thus is *ku-hupha*. *Eja!* is an exclamation of thanks; when receiving anything, both hands are held out, and the words *eja, eja, eja!* or *nanga, nanga!* are uttered.

4

1st voice. *Mahulowele 'pahle ambo apulapula ngunapunda ngiwambe.*
The millet have eaten locusts you place did not plant not.
2d voice. *'Ohile ambo apulapula ngunapunda mpunga, ahati, ngwambe!*
Have eaten locust you place did not plant rice, father, not!
2d voice. *Apulapula ngunapunda mpunga, ahati, ngwambe!*
1st voice. *Apulapula ngunapunda mpunga, ahati, ngwambe!*
Chorus. *Mahulowele, pahle ambo!*

Mahulowele: after the first crop of millet has been taken in, the stalks are cut off near the ground and the roots allowed to remain in the soil. Next season, they again sprout and yield a second crop. This second year growth is mahulowele. [241]

5

1st voice. *Mazimba w'chinguwumbo chilo chilo chilwe chilo chilo!*
Lions in the palm-trees at night, etc.
2d voice. *Mazimba w'chinguwumbo, kwimba likwale Atiguna! Tinjiwe chilo chilo etc.*
Lions in the palm-trees to sing likwale Atiguna! I shall die tonight, tonight, etc.
Chorus. *Mazimba w'chinguwumbo!*

Likwale is the name of a dance, *Atiguna* is a woman's name. Cf. "Let us eat, drink, and be merry, for tomorrow we die."

6

1st voice. *Ndundu, ndundu, ndundu!* Repeat.
Teasing, teasing, teasing!
2d voice. *Nahulaga chilunda lundu, undundu'we, ngunda!*
If you have teasing teasing, me tease me, I am going away!
Chorus. *Ndundu!*

7

533
539

1st voice. *Wakwambaga'wula* [illegible] *chakakatunda*
The one whom we were talking about, have he lo! that thing which happened some-[illegible]
time ago, the day after tomorrow!

2d voice. *Ahipana* [illegible] *chakakatunda,* [illegible]
(a name) is going that thing which happened some time ago, I am off!

Chorus. *Kanpa* [illegible] [illegible] [illegible]
You give milk who has lies (lied to) you!

The meaning of this is: "If a man comes along who has done you an ill in the past and is just as likely to do so again, should you be inclined to reward his lies by giving him hospitality? Better to go away and leave him alone."

8

1st voice (male). *Kapakala'ko* [illegible] *ahajanpana!*
The little lip ring that, come and wash it! Repeat.

2d voice. *Kapakala'ko,* [illegible], [illegible] *ahajanpa* [illegible]
The little lip ring that, you folk over there, come and wash them today!

1st refrain. *Katakatunda* [illegible]
Lest it turn into bumble-bee honey!

1st voice (female). *Awbi* [illegible]
What about heard your? Refrain.

2d voice. *Awbi* [illegible]
What about heard your father? Refrain.

2d refrain. *Sitakatunda* [illegible]
Lest it turn into [illegible] (part of a maize ash).

9

1st voice. *Achimbakila* [illegible]
Why are you crying [illegible] the cause?

2d voice. *Tingawinka* [illegible]
I will take her to her own home there!

Chorus. *Kamajinla* [illegible]
I am going to look for home!

This refers to a troublesome wife. "Let her go back to her mother and the husband will go about his own business."

10

1st voice (woman). *Ukwakwalaga* [illegible] *ni* [illegible] [illegible]
If I were not discouraged then I would have been still trusting! Repeat.

2d voice (man). *Ukwakwalaga* [illegible] *ni* [illegible] *hatahata! hatahata!*
If I were not discouraged then I should have been saying hear! hear!
Hatahata hatahata hatahata [illegible]
Hear, hear, hear, dear me!

765 to fire off his gun as long as his powder lasted. During the period of mourning, drumming
[534] went on continuously, *chindimba* being played on the three small drums called *ichoma*.

With the exception of the flexed attitude of the body, the foregoing description is a correct account of what happens today. The body is now fully extended.

The *ewile* are two or four in number, although other friends may assist in all their services. On about the third day, the *ewile* sew up the body in bark cloth, completely envelop-
767 764 ing it; a bamboo needle is used and left sticking in the cloth at the last stitch. The body is then enclosed in a mat slung on a pole, and carried from the hut to the grave. First, the procession makes a round of the village, passing by all the houses which the dead man used to visit, and over all the paths he used to cross. His children and those of his relatives under seven or eight years old gather in the village, and throw pieces of charcoal toward the body as it passes, "so that they shall forget the dead man," or run after the corpse, while some one sprinkles medicine over them.

764 As the procession leaves the village, it is headed by the drums playing *chindimba*, but after a few hundred yards, only the *ching'anga* drum, now called *chitanda*, beats time for a
[534] short distance; the procession then goes on quietly. Following the drums, walks the mother or another relative carrying flour with which the grave will be marked out. Behind this mourner, the body is borne by the *ewile*. The *ewile* are always the first to carry the body, but are later relieved by other friends of the deceased; no one would ever ask to be relieved.
[114] After the chief mourner, follow the other relatives and friends, the men first, the women behind. Boys just back from their *unyago* attend to learn the customs. All the relatives of the deceased go to the burial, contrary to Macdonald's account.[1]

In this order, the procession reaches some tree thirty or forty yards from the place of burial where the corpse is put down in the shade, *mtala*, "resting place", and while the women and part of the men watch beside it, the *ewile* proceed to the burial place. They cut branches from a sacred tree, and strew them on the path. On approaching the appointed spot, they clap their hands in salutation, asking that the burial ground be opened to them.

The head *mbile* chooses the site where the grave shall be dug, after which the mourner marks out the limits with the flour she has brought. In the days when the body was buried in contracted posture, a circular grave was dug just big enough to allow two men to work in it. Eight feet was the usual depth but this was decided by the deceased's spouse, if he were living, otherwise, by his near relatives. In the east side of this circular well, a cave was excavated, just large enough to admit the contracted corpse. When all was prepared, the body accompanied by all the mourners, was brought from *mtala* to the graveside. The chief *mbile* with a friend of the man's family and one of his wife's, standing in the grave received the body and placed it in the cave, resting on a mat and covered with bark cloth. The body lay on its side with its back toward the well, and its face looking

[1] Op. cit., vol. I, p. 168.

3: Stanmus D-5 (ca. 1912) 1922 FT7 Yao FT7

that she is tattooed more profusely on the buttocks and legs. The circlet of beads was formerly made like *mapundu* with a bark-cloth core, called *mbumbo* or *mbulo* (*bu-ombo*, to slip off), referring to the *mbulo* being slipped off over the legs. The fashion now is to wear single strings of beads; each string is of one color but all the strings are different and perhaps number a dozen or more.

Lipumba: a bead belt three-inches wide, worn by Yao women near Lake Nyasa. A bead apron, *lisajwa*, is also worn by them but not near Zomba (Pl. VI, fig. 2).

A woman removes her beads when she is "unclean," that is: (a) during the menstrual period, (b) during the period of mourning for a near relative when coitus is forbidden, (c) before the birth of a child and afterwards until such time as she may resume intercourse with her husband.

A large variety of beads has long been used by the Yao. There are some rarely seen now which were much prized in years gone by, while others are of quite recent introduction. There is no evidence that they themselves made beads and there are few which are probably not of European manufacture.

Clothing. The Yao used bark-cloth before the introduction of woven materials. The older people may still be seen in it and it is used in most of the ceremonies. At one time, they also used to weave a cloth called *likwumbo* from a native cotton plant. This has been given up since the introduction of imported materials.

For the method of wearing cloth, see Pl. II, fig. 2. The very poorest people wear only a strip of calico round the pudenda, held in position by a string round the waist hanging long behind and in front; this is called *mbetha*. Yao women, when menstruating, wear under this a little piece of cloth called *likumbi;* it is only worn at this time and not always as in certain other tribes.

Warfare. Fighting has naturally played a large part in the life of the Yao as among other African tribes, but at no time were these people a trained fighting race. Warfare was of a desultory character consisting mostly of raids by one feudal chief upon another. A party of men belonging to a chief at enmity with another, meeting some of his followers would challenge them, "*Abumbe*, who are you for?" The name of the rival chief in answer was the sign for battle to begin. A false answer would never be given to gain an advantage. When about to throw a spear, the thrower calls to his adversary.

The Yao have possessed guns for a long time. Going out to fight, the Yao used to leap from one foot to the other, and spin their guns around in their hands. They made their own stocks for the rifles. They also used to make a small, cast-iron cannon about three feet long, called *kambuda*, "a little nose." It was carried in the arms and was touched off by a torch. Drums called *ngoje* were taken into battle. There is an old war drum at Malenya's village, taken in 1896 by the old Malenya from a Mang'anja chief called Mkubumbo who lived near Lake Chiuta. Since then, this drum has always gone into battle with Malenya. Around it his men would dance and anyone who had killed a man in battle would run up to it and spit upon it in salutation.

857 To the index:

524 "*Lukungulo lwa ng'ombe lwa kumdala mwilombo!*"

539 "(This one is) the leg of an ox which walks on the *plain!*"

To the thumb:

"*Chamuno*"

"The fish"

857 *Cat's Cradles* are known as *chinguru*, "the spider's web" (Pl. XXIII). The position
524 of the string on the hands is as in Position I of Miss Haddon's book and this is followed by Opening A, given by the same author.[1] (Pl. XXIII, figs. 1, 2.) Three methods of arriving at the same figure, which is called "the net," are shown here (Pl. XXIII). Variety C is followed by the making of a knot, figured in C 13, known as "the child." There are probably a number of other forms made by natives, but these, which I saw one of my women patients make, will serve as an example.

534 **Musical Instruments.** The number of instruments proper to the Yao appears to be small, indeed probably only two in number, the *mangolongondo* and the *chilipupu*, with perhaps the three holed flute, *chilolo*.

The former is constructed on the principle of a xylophone; it consists of two trunks of banana trees laid on the ground and held in position by stakes. They are not quite parallel but approach each other somewhat at one end, being from one to two feet apart; on these rest cross-wise a number of pieces of wood of varying thickness and length, kept in position by pegs driven into the banana trunks on each side of each billet. These are struck with sticks by a single player, or by two persons sitting on opposite sides of the instrument. Another variety is found in which the pieces of wood, which may have holes bored in them to effect differences in sound, are arranged over a hole scooped in the ground (Pl. V, fig. 1).

The *chilipupu* consists of a piece of plank hollowed out to form a resonator on which are fixed a number of keys of bamboo or metal of different lengths. These are arranged across a bridge, and the free ends are set in vibration by twanging with the fingers.

[FT7] The instrument now most commonly seen is the same which was introduced, I think, from the coast about 1890 to 1900. It is a type of guitar.

An instrument played by women — and this again is of recent introduction among the Yao — is the *mkungulu*, which consists simply of a stick of wood about a yard long to which is affixed a single string. One end is held between the teeth, the other in the hand; it is twanged by being struck with the thumb and finger of the other hand close to the mouth, which is opened to different degrees, and gives a variety of notes resembling those of a jews' harp.

The *ching'wengeng'wenge* and drums are referred to under *Dancing*.

[1] Kathleen Haddon, Cat's cradles from many lands, New York, 1929.

3:Stanmus D-5 (ca. 1912) 1922 FT? Yao FT?

Women stick on a small spit a pretty green and white beetle, one of the *Cetoniidae*. The free end of the spit is then held between the teeth. At different positions on the stick, the humming of the impaled insect gives rise to different notes. The beetle is named *chingwanyanga* or *chinwanwa* (*wanpaive*, Chin.). The wing-covers of another beetle, *mutetebwabo*, a *Lamellicorn*, are used by women for the making of a musical instrument. The wing-covers of some twenty of these insects are threaded on a string arranged round the shoulders and foot of the player as she sits on the ground. The string on each side, as it passes from the shoulder to the foot of the same side, is plucked by the fingers of the opposite hand, different notes being obtained by different degrees of tension put on the string by pressure with the foot. The wing-covers give a buzzing quality to the notes which all natives like. 534 237

Mention should also be made of the horn, *lipenga*, commonly made of a long piece of reed or bamboo with a trumpet-shaped end, made out of a portion of a gourd. Antelope horns are also used. The horn is blown on journeys. [484]

Dancing. Dancing among the Yao, as among many other peoples, is the outcome of the pleasure experienced in rhythmical movements. The first accompaniment was probably the clapping of hands to mark time, followed by some exclamatory sounds more or less prolonged and occurring at regular intervals. Later, there was probably some refrain and, later still, drums were added to mark time, and songs formed an additional accompaniment. I believe that, here, dancing has always been an expression of pleasure and happiness and has been secondarily introduced at many ceremonies. In the majority of cases, such ceremonies were occasions of joy, the only exception being at funerals, but there I think their introduction was rather as a means of passing the time and avoiding silent brooding than as any real part of the rite. 535

The names given to various dances indicate their time or rhythm, and are, therefore, comparable to our own words, waltz, two-step, etc. There may be a number of airs for each time, and many sets of words to each air. The time may be given by clapping only, or by the addition of drums. Anyone acquainted with these dances, hearing drumming in the distance, can at once recognize the dance that is going on.

The drums which are used at dances (Pl. XXII), are made of a hollowed-out log of wood with a skin tambour stretched over the mouth of the drum and fixed by wooden pegs. On the tambour is smeared a layer of beeswax. The tambour is tightened by warming over a fire, so that the correct note is obtained; a fire is always kept burning close to the spot where drums are being played. 534 535

Lilondi: a drum shaped somewhat like a native flour mortar, three to six feet high with the tambour one to two feet in diameter. The drum usually lies on the ground, the player sitting on the barrel of the drum, or he may have it suspended from him by a cord, the body of the drum dragging on the ground between his legs. It is played with both hands and gives a deep, resonant note, "*ki, ki, ki*" (Pl. XXII, figs. 12, 13). 534

3:Stanzas D-5 (ca. 1912) 1922 FT7 Yao FT7

534 *Ntapiipe:* like *likuti*, but played in a different way, giving the sound "*tpu tpu tpu!*"

Mahose: the same as *likuti*, but with a higher pitched note. This can be produced by heating the *likuti* drum over a fire.

Chichoma or *linpuhe:* a small drum eight to ten inches high, held in the hands by strings on either side, in the same way as a concertina, and pressed against the chest while being played with the fingers. It may be alternately pressed firmly and lightly against the chest, giving variety in timbre. The base which rests against the body is cut down into a kind of foot-piece (Pl. XXII, fig. 13).

Chinpunpu: a small drum eight to ten inches high, rather goblet-shaped with stem and base, the circumference about equal to the height. It is beaten with two sticks, "*npunpunpu npunpu!*" (Pl. XXII, fig. 17).

Chimininge: the same drum played with two sticks, "*mini, mini, mini!*"

Ndimbe: a small three legged drum about the same size as *chinpunpu*. It can be carried in one hand and played with the other. It is used with one stick or more, in place of *chinpunpu* and *chimininge* (Pl. XXII, fig. 16).

Maiwu: an old drum not now used. It varied in size from one to four feet long, was suspended from the neck, and played at both ends (Pl. XXII, fig. 14).

It is very difficult to give any idea of the time and different sounds the drums give. People learn them by repeating the sounds the drums make thus: *Ndii din dii nilpdii ndii din dii nini nini nfipd nfipd*, etc. Several drums, often six or more, are played together, each contributing its element of sound. They are often played very fast, but the time kept is most exact.

535 Dances are ordinarily performed by everyone in a village, but there is always a leader. Or again, there are trained bands of dancers who earn their living by attending ceremonies or any festive occasion. In a few cases, the dances are only danced by professional dancers. A short account is given below of many of the Yao dances.

Likwata: (*ku-kwata*, to clap the hands). No drums are employed, but the time is kept by clapping. In some villages, drums have lately been introduced. It is a common dance in a village on any moonlight night, just for amusement. Women and girls take part. Standing in a circle, they sing and clap, while any who wish, go into the circle, perhaps a dozen at a time, and dance their shuffling steps. A song which is included under *likwata*, is a representation of the dung-beetles (scarab) rolling the little balls of dung to their nesting places. The women shuffle backwards or forwards, like the beetles, one pushing and one going backwards pulling. As they dance, they sing:

[531] "*Likwa, hili hili!*"
"(oh little) dung-beetle, push push!"

Refrain:

"*Likwata mwapi!*"
"It is rolling dung!"

3: Stannus D-5 (ca. 1912) 1922 FT7 Yao FT7

142
292
534
301
516

CHIEF NYENGU WENYE DANCER

[End Plate 1]

3:Stanner D-5 (ca. 1912) 1922 FT7 Yao FT7

535
534
241
301

323
415

3. PROFESSIONAL HUNTERS WITH RIFLE AND LION BAITS

4. PITSMEN

857
535

1. SMALL BOYS DANCING Chikwah

2. A GROUP OF YAOS AT A DANCE

[End Plate 3]

534

291
357

1. [illegible], the [illegible], plays on Too [illegible]

2. A Too as a native [illegible]

304

142
301

3. [illegible] of [illegible] (Too woman)

4. A Too [illegible]

[End Plate 5]

3: Stannus D-5 (ca. 1912) 1922 FT7 Yao FT7

752
757
413

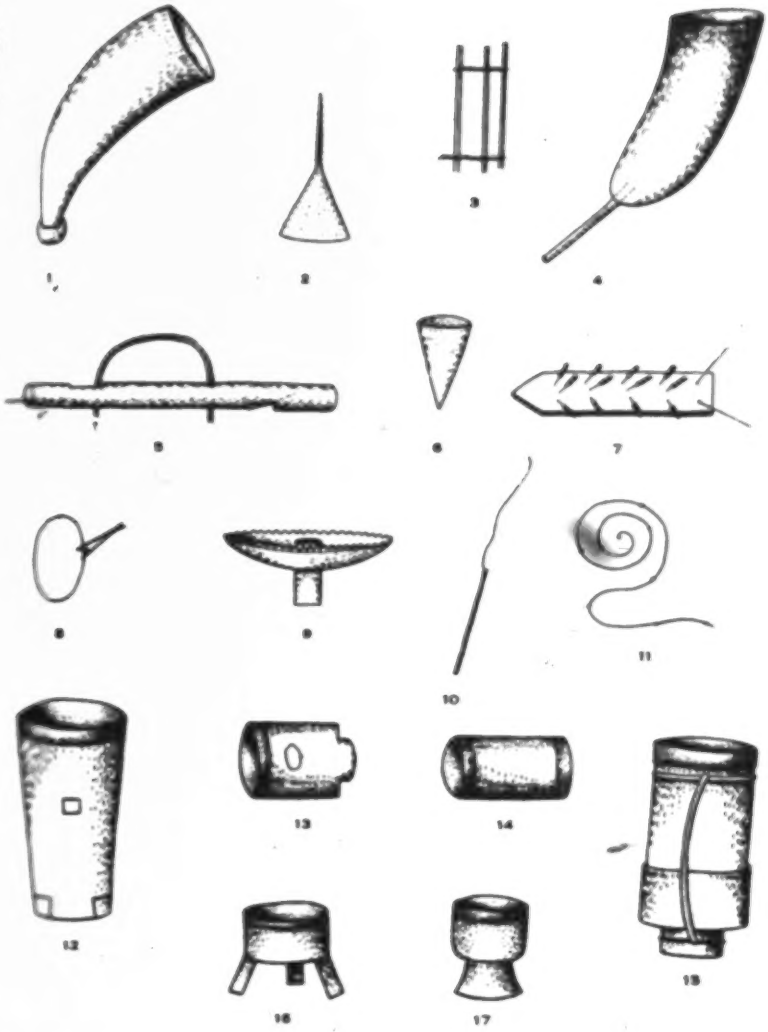

1, Copper horn; 2, Burial keeps; 3, Splint; 4, Ebena funnel; 5-11, Children's toys; 12-17, Drums

[End Plate 22]

4: Stannus D-5 (ca. 1909)1910 FT7 Yao FT7
Mbravi FR4

Journal of the Royal Anthropological Institute, Vol. XL, 1910, Plate XXVII.

M
Y
415
787
534
276
531

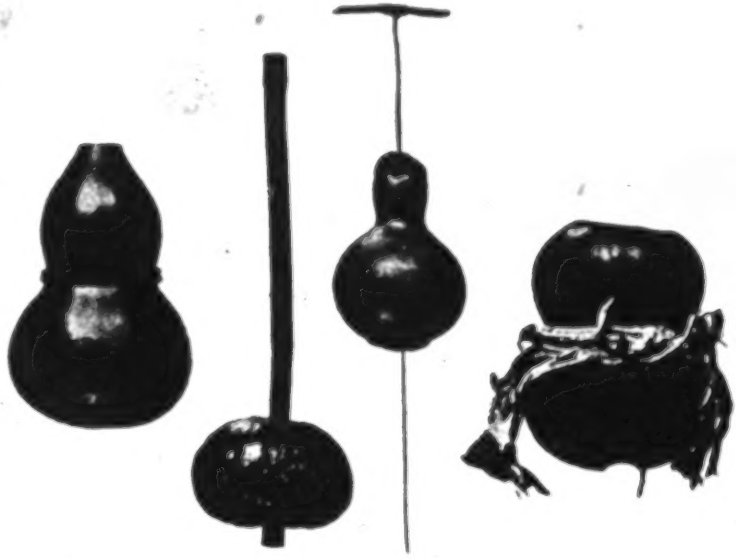

1 2 3 4

SOME TRIBES OF BRITISH CENTRAL AFRICA.

[p. 334(B)]

4: Stannus D-5 (ca. 1909) 1910 FT7 Yao FT7
Moravi FR4

M 535

and the feature of it was the introduction of life-size representations of animals made of bamboo and grass with men inside.

I once saw these at a *nawali* ceremony among the Awisa (*q.v.*).

12. *Nkula.*—Woman only present; danced on the occasion of a girl's first menstruation.

13. *Litiwa.*—Women only, on the occasion of the quickening with first child.

Y 535

14. *Njwala.*—Men and women, a quick shuffling step while standing in a circle.

15. *Sukusa.*—The body shaking (shoulders) dance of boys, they walk round in a ring, some fifty of them, the drums in the middle; when the bass drum breaks into a quicker time they all start shaking shoulders and bodies with intervals for two or three steps.

16. *Nsenja.*—Danced in a circle, men and women alternately.

17. *Nkonde.*—A big dance with *senji* rattles.

18. *Chilónde.*—Dancing boys dance.

19. *Mberusa.*—(1907) men and women; each carries a bango reed filled with pebbles—no drums.

20. *Mangunji.*—A coast dance; palm leaf bags filled with pebbles are tied on the legs.

21. *Senja.*—A *pas-de-deux*, each man with a rattle and head-dress; for a few moments they wander round each other picking up the time and tune, and then jump into a very fast step dancing and jumping into the air shaking the rattles.

22. *Chimwiniwini.*—A *pas-seul* by a man carrying a viol and bow with anklets of small sticks.

Y M 535

23. *Masuwe.*—Danced no longer. At Mponda's village a big crowd used to dance with skins round the loins and wooden anklets: in their hands they carried live snakes which had been rendered harmless by putting medicine over their holes before digging them out. Four drums as in *chindimba* were used. The women all fled away.

Description of Plates.

PLATE XXVI.

M 789 778 534 412

1. Iron tube with human hair.
2. Tortoise-shell containing "medicine.
3. Leaf packet of "medicine."
4. Tortoise-shell.
5. Iron knife.
6. Horn containing "medicine."
7. Seed rattle.
8. Bead amulet.
9. Stuffed squirrel skin.

1–9. Contents of the bag of an *Ula*-man.

PLATE XXVII.

M Y 415 787 534 276 531

1. Gourd vessel, Yao.
2. Gourd rattle, Yao.
3. Divining-gourd.
4. Gourd for casting lots.
5. Mafanja.
6. Amachinga.
7. Awisa.

3:Stannus D-5 (ca. 1912) 1922 FT7 Yao FT7

Women stick on a small spit a pretty green and white beetle, one of the *Cetoniidae*. The free end of the spit is then held between the teeth. At different positions on the stick, the humming of the impaled insect gives rise to different notes. The beetle is named *chingwungwungu* or *chiwunwun* (*wungulire*, Chin.). The wing-covers of another beetle, *watchetache*, a *Lamellicorn*, are used by women for the making of a musical instrument. The wing-covers of some twenty of these insects are threaded on a string arranged round the shoulders and feet of the player as she sits on the ground. The string on each side, as it passes from the shoulder to the foot of the same side, is plucked by the fingers of the opposite hand, different notes being obtained by different degrees of tension put on the string by pressure with the feet. The wing-covers give a buzzing quality to the notes which all natives like. 534 237

Mention should also be made of the horn, *lipenga*, commonly made of a long piece of reed or bamboo with a trumpet-shaped end, made out of a portion of a gourd. Antelope horns are also used. The horn is blown on journeys. [484]

Dancing. Dancing among the Yao, as among many other peoples, is the outcome of the pleasure experienced in rhythmical movements. The first accompaniment was probably the clapping of hands to mark time, followed by some exclamatory sounds more or less prolonged and occurring at regular intervals. Later, there was probably some refrain and, later still, drums were added to mark time, and songs formed an additional accompaniment. I believe that, here, dancing has always been an expression of pleasure and happiness and has been secondarily introduced at many ceremonies. In the majority of cases, such ceremonies were occasions of joy, the only exception being at funerals, but there I think their introduction was rather as a means of passing the time and avoiding silent brooding than as any real part of the rite. 535

The names given to various dances indicate their time or rhythm, and are, therefore, comparable to our own words, waltz, two-step, etc. There may be a number of airs for each time, and many sets of words to each air. The time may be given by clapping only, or by the addition of drums. Anyone acquainted with these dances, hearing drumming in the distance, can at once recognise the dance that is going on.

The drums which are used at dances (Pl. XXII), are made of a hollowed-out log of wood with a skin tambour stretched over the mouth of the drum and fixed by wooden pegs. On the tambour is smeared a layer of beeswax. The tambour is tightened by warming over a fire, so that the correct note is obtained; a fire is always kept burning close to the spot where drums are being played. 534 535

Libuti: a drum shaped somewhat like a native flour mortar, three to six feet high with the tambour one to two feet in diameter. The drum usually lies on the ground, the player sitting on the barrel of the drum, or he may have it suspended from him by a cord, the body of the drum dragging on the ground between his legs. It is played with both hands and gives a deep, resonant note, "*ti, ti, ti!*" (Pl. XXII, figs. 12, 15). 534

534 *Nhgutiqa:* like *likuti*, but played in a different way, giving the sound "*tye tye tye!*"

Mchose: the same as *likuti*, but with a higher pitched note. This can be produced by heating the *likuti* drum over a fire.

Chichoma or lingoba: a small drum eight to ten inches high, held in the hands by strings on either side, in the same way as a concertina, and pressed against the chest while being played with the fingers. It may be alternately pressed firmly and lightly against the chest, giving variety in timbre. The base which rests against the body is cut down into a kind of foot-piece (Pl. XXII, fig. 13).

Chinganga: a small drum eight to ten inches high, rather goblet-shaped with stem and base, the circumference about equal to the height. It is beaten with two sticks, "*ngangaga ngangal*" (Pl. XXII, fig. 17).

Chimininga: the same drum played with two sticks, "*mini, mini, mini!*"

Ndimbe: a small three legged drum about the same size as *chinganga*. It can be carried in one hand and played with the other. It is used with one stick or more, in place of *chinganga* and *chimininga* (Pl. XXII, fig. 16).

Mivu: an old drum not now used. It varied in size from one to four feet long, was suspended from the neck, and played at both ends (Pl. XXII, fig. 14).

It is very difficult to give any idea of the time and different sounds the drums give. People learn them by repeating the sounds the drums make thus: *Ndā dīn dā nīēpīlī ndā dīn dā mīnī mīnī nīlyē nīlyē, etc.* Several drums, often six or more, are played together, each contributing its element of sound. They are often played very fast, but the time kept is most exact.

●535 Dances are ordinarily performed by everyone in a village, but there is always a leader. Or again, there are trained bands of dancers who earn their living by attending ceremonies or any festive occasion. In a few cases, the dances are only danced by professional dancers. A short account is given below of many of the Yao dances.

Likwata: (*ku-kwata*, to clap the hands). No drums are employed, but the time is kept by clapping. In some villages, drums have lately been introduced. It is a common dance in a village on any moonlight night, just for amusement. Women and girls take part. Standing in a circle, they sing and clap, while any who wish, go into the circle, perhaps a dozen at a time, and dance their shuffling steps. A song which is included under *likwata*, is a representation of the dung-beetles (scarab) rolling the little balls of dung to their nesting places. The women shuffle backwards or forwards, like the beetles, one pushing and one going backwards pulling. As they dance, they sing:

[539] "*Lilowa, tuti tuti!*"
"(oh little) dung-beetle, push push!"

Refrain:

"*Lilubuda mungil!*"
"It is rolling dung!"

Chindimba: the *chindimba* songs are the favorites among all the older people. They have been in late years partly replaced by others, but, at the present time, there is a tendency to return to them; they are staid in tone and the dance is sedate. *Chindimba* is always played at mournings. While the whole company sits around in a circle with the drums at one side, a couple of people do the dancing in the middle. The drums used are a *chingonga*, two *ichoma*, and a *likuti*. With the commencement of drumming, a man well known for his songs steps out into the middle and begins singing; he is followed by another man or maybe a woman who sings a second part; the two singers are generally people who have found that they sing well together. Two such people will be welcomed, and they may sing many songs, while any young upstarts who do not sing well together, will be given to understand that their performance does not meet with approval. People have their favorite songs, and there may be much heart-burning if an old man finds some one else singing a song that he considers especially his own. As they sing, they dance their peculiar shuffling steps. (The words of some of these songs are given later.) 535

Salapa: an Anguru dance sometimes danced by the Yao. It resembles *chindimba* in that all sit singing and clapping while, one at a time, men dance in the open space to time given by bamboo sticks knocked together. The songs are all hunting songs.

It is impossible to describe the steps used in all the dances; for each dance, they differ, of course, and except by a cinematograph film, they cannot be reproduced. The movements of the feet are ordinary stepping motions or patting of the ground with the feet, the actual excursions being very small, so that in most cases it is impossible to devise any means of making out the steps. To enable them to perform these steps, they commonly dance with the knees bent, the buttocks protruded behind, and the back arched. In some cases, this attitude is extreme. [516]

There is a larger series of dances which, to the uninitiated spectator, appear to resemble each other very closely. The general plan of the dance is as follows. The drums are placed in the middle; around them in a circle are the dancers and outside these, the onlookers. The circle may be thirty or forty strong, composed of men only or of men and women as the case may be. Commonly, the ring of dancers is divided into two halves, each half being headed by a leader who sings the song, all joining in the refrain, while the onlookers do the clapping. When the drums begin, they all walk round in a circle, but at a given signal, one of the drums gives out a new time, and the whole circle starts dancing with short, shuffling movements already described, usually progressing in the circle, sometimes going backwards, sometimes facing the drums or turning right around in the line.

Mkomaula is a dance of, I believe, recent introduction which has replaced to some extent *chindimba*, much to the disgust of the older people who dislike the innovation. They shake their heads and say, "*Chilambo chimasile!*" "The world is finished." The drums used are *likuti*, *ntipatipa*, *mchose*, and *chingonga*. It is danced by men and youths only. [177]

Njauka or, as it was known some years ago, *mpumbuli*, is danced like *mkomaula*, but the

3:Stannus D-5 (ca. 1912) 1922 FT7 Yao FT7

535 steps are accompanied by movements of the shoulders which form the feature of the dance. Performers may go into the middle and do *ku-punila* (see *mkonde*).

Mlewanda resembled *njeula;* it is an old dance not seen now.

Chibonde is a dance for youths, the characteristic feature being that, at intervals, they squat down on their heels and spin round very fast, with frog-like movements (Pl. III, fig. 1).

Mkonde is a favorite dance for men and women; drums, *likuti*, *ntiputiya*, *mchoso*, *chimisinjo*, and several *lingoma*. The dancers commence by going round in a circle, and then, facing the drums, they all continue their steps without moving from their places, while a few go out into the circle and dance in the open space about the drums. Two men go out from one side and are met by two women from the other side. Men love to carry their knives in their hands on these occasions, properly the large knife with an ivory handle called *mwinjo;* a man would go miles to borrow such a knife from a friend, for the dance. The women often carry rattles in their hands. After dancing in the middle for a time, they will severally withdraw to the circle, to be followed by others. A man dancing out into the middle, may go up to any woman in the circle or among the onlookers, and by touching her on the shoulder with his knife, invite her to come out and dance. In the middle of the ring, he may embrace her, after which each retires to his place. To make this embrace is called *ku-punila;* the man folds the woman to his breast. It is very gently done with a certain air of gallantry, and there was formerly no objectionable element in it. A man does not extend this embrace to his wife or to any near relatives. *Ku-punila* occurs in other dances: *chibonde*, *chileuw*, *mlenjeas*, *njeula*, *mbarula*, *masambala*, *chibilo*, *lichipi*, and *liyaya*, and in *sekwe*.

Chileuw: the drums used are *chimisinjo* and *mchoso*. It is danced by young men and women; as in other dances, a ring is formed, the men on one side, the women on the other. The song is usually started by two men on one side and answered by two women on the opposite side. When the song is well under way, the drums are signalled and all start dancing in a circle. Movement in all dances is counter-clockwise. After circling round, the dancers come to a stand-still, while men and women go out into the middle and dance a kind of quick heel-and-toe step, followed by *ku-punila*.

In the intervals of dancing, the girls and boys often play at *sekwe*. They may stand or
535 sit in a ring. One of the boys standing in the middle sings, "*Sekwe sekwe, sekwe sewke,*
857 *sekwe!*" with an accompaniment of clapping by the ring of youths, but no drums. He then goes up to any girl sitting in the ring and asks her whom she wants; she names some one who is then called out, and the girl and boy dance up and down together, embrace (*ku-punila*), and return to their places. Another girl is then asked. Sometimes the girls will take up the song, and ask the boys to choose. It is like a kind of "kiss in the ring."

There is another kind of dance for boys and girls. They are arranged in rows opposite one another, some paces apart. The boys grasp a long pole and bending forward, dance up

3: Stannus D-5 (ca. 1912) 1922 FT7 Yao FT7

to the row of girls, singing, "*Anamberuka mberuka!*" refrain, "*Maperuka!*" (*ku-peruka*, to give). Leaving the pole at the girls' feet, they retreat, after which the girls take it up and advance to the boys in the same way. 535 857

Chibiro is danced rather like *mkomasula*. A group of men dancers go round in a circle, and within this circle may be a line of women dancing to the same time but with rather different steps than the men. This I have seen danced by a trained band of dancers, but onlookers join in. A man may lead a woman into the middle and embrace her. There is a tendency among these trained dancers to forsake the old time stately embrace for something which is not so unobjectionable. 535

Lichipi is a new dance, but one that is well-liked. The drums are as in *mkomasula*. Men, women, and young people dance in a circle followed by entry into the middle, and *ku-punila*.

Mbasula is danced by men on one side and women on the other side of a circle, to drums *mchoso*, *ndimbe* and *mangala*. Any of them may dance out into the middle after going round in a circle.

Liyaya is an old dance for the older men and women. Like *mbasula*, the steps are slower and are characterised by side-to-side movements.

Mtukunga: drums, *likuti*, *chinganga*, and a *mchoso* drum called *mbitiku*, because it is so played as to give the sound "*mbitiku!*" It is danced by men in a crowd. While the feet do little, shuffling steps, the buttocks are jerked out backwards and forwards.

Chandamali: a dance of recent introduction resembles *utuli*.[1]

There are three dances which are danced by special dancers.

Mlenjesa: the same as the *mtsecha* of the Anyanja,[2] generally danced by four men who wear a kind of kilt made of strips of palm-leaf, and rattles, *masewe*, on their legs. They may also wear the *liungu*, a headdress made of the tail-feathers, *unga*, of the *chiunga* bird: it is like a broad hat-brim without a crown, the feathers projecting radially. The *mbande*, a piece of a shell which comes from the Zanzibar coast is also often worn (Pl. III, fig. 2). The drums which give the time are *chimininga*, played very rapidly indeed. The steps are incredibly fast, with greater excursions than in the other dances, and usually end up with a jump into the air and a pose with grimacing. A circle is formed round them by the young people who, in the intervals, walk round singing and clapping. The dancers may call out any girl for the embrace. [292]

Masanja: danced by two or three pairs of men who wear the palm-leaf kilt, *matambua*, and a broad, bark-cloth belt called *chamba*. When the drums start, these dancers walk round the circle of onlookers, and get the song going, and the clapping to time; then with a signal to the drummers, they start dancing alternately an extremely rapid dance with rattles in the hands, *masanja*, and a kind of *dance-du-ventre*, *chamba*. The drums employed are *mchoso*, *ntiyatiya*, and *chimininga*. The rapid dancing is too exhausting to last more than a few seconds. This is always danced at *Lupanda*. [292]

[1] Cf. Stannus, "Notes on some tribes of British Central Africa," op. cit., p. 334. [2] Ibid.

535 *Ching'ungung'ungu:* A soloist dances about, playing a single-string viol with a bow as he sings. His songs are all about people, village episodes full of personalities and many witticisms. Kondosi of Malamya's was a well known performer (Pl. I).

533 **Songs.** The following are some of the *Chindimba* songs:

539

1

1st voice. *Kutumbila anyma nyumba achalanda ayuwa hunpi?*
To be angry the owner of the house strangers they sleep where?
2d voice. *Kutumbila anyma nyumba Cha Nkuleka tinjiwa.*
To be angry the owner of the house (Mr.) Nkuleka I shall die.
1st voice. *Kumbunya unami uniluwa,*
To ask me to answer lies you.
2d voice. *Kumbunya unami Cha M'wenye,*
To ask me to answer lies master,
1st voice. *Alamu tinpenda ipuye,*
Brother-in-law I will go thus,
2d voice. *Alamu tinpenda ipuye.*
1st voice. *Awala wonache apila nchikuwa.*
There (go) the children they go on all fours.
2d voice. *Oh lelo'jo tinjiwa.*
Oh today I shall die.
Chorus. *Kutumbila anyma nyumba!*

The burden of the song is: We see we are not wanted here; better we want away!

2

1st voice. *Ah lijani'wo hola hola kupuka tukapuchaja lelo'ja!*
Ah baboon these jumping jumping to enjoy he is going to enjoy today!
2d voice. *Ah lijani'wo! kupuka tukapuchaja wunnache!*
Ah the baboon these to enjoy he is going to enjoy child!
Chorus. *Kulya mbunda ayu nyunu!*
to eat (seed) pods of dryness!

"Seed pods of dryness" is also referred to in a story of the baboon. When he is dozing at night sitting on a tree, he hears a seed-pod in the neighborhood crack, and wishing to mark the spot, so that he may go and eat the seed in the morning, he stretches out one arm in this direction and goes to sleep again, to be awakened by the sound of another cracking pod; whereupon he puts out another limb to mark that spot. Presently, he has all but one limb including his tail set out as sign-posts. Half awake he starts to put out the one remaining limb, and falls off the tree.

3: Stannus D-5 (ca. 1912) 1922 FT7 Yao FT7

535
534
291
301

323
415

2. Professional dancers with kilt and long sabres

4. Physiques

857
535

1. Dancers with [illegible] Clubs

3. A [illegible] of Yao of [illegible]

[End Plate 3]

4: Stannus D-5 (ca. 1909) 1910 FT7 Yao FT7
Maravi FR4

wrestle thus: each man passes his right arm round his opponent's waist and grips his opponent's left wrist. When one has thrown the other, the victor spits on his hand, dips it in the dust and then smites his victim on the forehead. M Y 526

The boys practise long jumping. Small boys make miniature bows and arrows, spears, etc., to play with; in their ways and frolics small children resemble European children exactly. Little girls play at dolls—they cut cucumbers into shape and dress them in calico cloth, carrying them on their backs and making *jectsmes* to suckle them. M Y 527 524

The first words spoken by an infant are *ma* (*amai*=mother) and *ta* (*atata*=father); at two years *mama* and *tata* are words used; a word soon learnt is *tatawa* "No! I don't want to." M Y 527 528

The only acting I ever heard of occurred when my own Mathila men once acted a village scene, in which a woman (a man dressed up) while pounding corn was assaulted and raped by another man. At the right moment her husband and others rushed in and collared the man, who was condemned to have his head cut off; the execution followed. M Y 536

DANCES.

The following is a list of dances; opposite each is the name of the tribe who dance it:— M Y 535

1. *Chindimba*, Yao.	13. *Lilimo*, Yao.
2. *Libwala*, Yao.	14. *Njwala*, Yao.
3. *Utala*, Yao.	15. *Sukuma*, Yao.
4. *Bhitowi*, Matanja.	16. *Nwanja*, Yao.
5. *Kwaja*, Matanja.	17. *Nlomda*, Yao.
6. *Tinbandowa*, Matanja.	18. *Chikwada*, Yao.
7. *Nhwawa*, Matanja.	19. *Mhowa*, Yao.
8. *Kwanapwa*, Matanja.	20. *Mangwaji*.
9. *Mhada*, Matanja.	21. *Sanji*.
10. *Chilisi*.	22. *Chimwinisiwi*.
11. *Vinpwa*, Matanja.	23. *Mawa*, Matanja and Yao.
12. *Nhala*, Matanja.	24. *Mang'ambala*, Yao.

1. *Chindimba.*—Danced at the *malwie* (mourning ceremony) generally inside the house unless a very large number of people are present. Y 535

All sit round and clap while one after the other men and women get up and dance in a rocking motion from one foot to the other, a small drum held against the chest; in former times a large one lying on the ground used also to be used—now two or three, standing on legs, are employed. When danced in the dead man's house, the body lies at one end of the room with the *Adembula* sitting by it. On one side are the wailers, and on the other the dancers, the dance being sometimes started immediately after death, sometimes the following morning and continued for three days.

This dance is also performed at almost any beer drinking.

4: Stannus D-5 (ca. 1909)1910 FT7 Yao FT7 Mbravi FR4

Y 535 2. *Likwata.*—A woman's dance (Scott's Dictionary states for men and women). The women dance in a ring, clapping their hands; no drums are played; each woman in turn advances into the middle, where there are usually four at a time. Here they turn round several times from left to right. When she has finished, she rejoins the ring passing in and out the others in the middle, a fresh woman taking 4's place and becoming No. 1 (Fig. 16). It is danced at any time after the burial ceremony is completed.

FIG. 16.

3. *Utala.*—A woman's dance of recent introduction; danced any time. A carpenter from Blantyre staying in Majawa's village January, 1907 (Lake Nyasa), was found to be playing *chindimba* in a manner different from the usual fashion; his own variation he called *utala*. About the same time a new dance had been invented by the women, and for want of a name they called it *utala*, though danced to the same music as *likwata*, but with *chindimba* drums. The dance resembles *likwata* somewhat, but all movements are hopping, preceded by a few steps called *chandamalai*.

M 535 4. *Mitewni.*—Danced by men only to the beating of four drums including *chimbanga* and *mbalala*; one man dances at a time, shaking the loins while men and women sit on opposite sides in a row.

It is danced before and after burial sometimes, and at other times.

Y 535 *Mang'ambala.*—An old Yao dance seen at Fort Johnson, 25.6.07. Four or five men attired in kilts made of dried palm-leaves with about twenty *mawu* on each leg. The four men do a continual kind of shuffling in line, the fifth, the *mpitda*, from time to time telling the drummers to play quickly, does a very fast *pas seul* with jumpings and kickings, and then assumes some idiotic pose.

M 535 5. *Kwaja.*—A woman's dance; the men look on.

6. *Tinbundwa.*—Circumcision dance.

7. *Nkwere.*—Danced by men and women, sometimes in the funeral procession behind the mourners; big drums are used.

8. *Kwangwa.*—A small basket with stones and pumpkin seeds inside used to mark time with.

9. *Mtenka.*—Drum as in *mangambala*, may be danced in the funeral procession at the head of the procession. *Nkwere* following the mourners.

10. *Chilwi.*—Old men's dance started immediately after the death of anyone, and continued for two or three days while the body lies in the house.

11. *Chiepwa, Ziepwa.* ? *Viepwa.*—"A big dance" held after the death of some person. Only the initiated are allowed to be present, and "women who are foolish and would know nothing." Children are carefully excluded, and intruders guarded against by posting men in the neighbourhood, anyone not being able to give the password was liable to be knocked on the head. Those taking part were said to constitute a society with a secret language, etc., and were only admitted after giving proof of bravery, endurance, etc.

The dance took place always on a dark moonless night usually quite late

4: Stanmus D-5 (ca. 1909) 1910 FT7 Yao FT7
Marau FR Y

M
535

and the feature of it was the introduction of life-size representations of animals made of bamboo and grass with men inside.

I once saw these at a *nawunli* ceremony among the Awisa (q.v.).

12. *Nkula.*—Women only present; danced on the occasion of a girl's first menstruation.

13. *Lotiwa.*—Women only, on the occasion of the quickening with first child.

Y
535

14. *Njwala.*—Men and women, a quick shuffling step while standing in a circle.

15. *Sukuma.*—The body shaking (shoulders) dance of boys, they walk round in a ring, some fifty of them, the drums in the middle; when the bass drum breaks into a quicker time they all start shaking shoulders and bodies with intervals for two or three steps.

16. *Nawaja.*—Danced in a circle, men and women alternately.

17. *Nkwada.*—A big dance with *sesji* rattles.

18. *Chikinda.*—Dancing boys dance.

19. *Mlerwa.*—(1907) men and women; each carries a bango reed filled with pebbles—no drums.

20. *Mwaguwji.*—A coast dance; palm leaf bags filled with pebbles are tied on the legs.

21. *Sunja.*—A *pas-de-deux*, each man with a rattle and head-dress; for a few moments they wander round each other picking up the time and tune, and then jump into a very fast step dancing and jumping into the air shaking the rattles.

22. *Chimwiniwini.*—A *pas-seul* by a man carrying a viol and bow with anklets of small sticks.

Y
M
535

23. *Mwawa.*—Danced no longer. At Mpunda's village a big crowd used to dance with skins round the loins and wooden anklets; in their hands they carried live snakes which had been rendered harmless by putting medicine over their holes before digging them out. Four drums as in *chindimba* were used. The women all fled away.

Description of Plates.

PLATE XXVI.

M
789
778
534
912

1. Iron tube with human hair.
2. Leaf packet of "medicine."
3. Iron bells.
4. Bead rattle.
5. Stuffed squirrel skin.
6. Tortoise-shell containing "medicine."
7. Tortoise-shell.
8. Horn containing "medicine."
9. Bead amulet.
1–9. Contents of the bag of an *Ulu-mwa.*

PLATE XXVII.

M
Y
915
787
534
276
551

1. Gourd round, Yao.
2. Divining gourd.
3. Malunja.
4. Gourd rattle, Yao.
5. Gourd for casting lots.
6. Amulets.
7. *Awisa.*

7: Hetherwick M-5 (ca. 1900) 1902 FT7 Yao FT7

with the dead. He approaches the shrine, opens the gate of the fence, takes a 769
pinch of beer and pours it into the pot at the head of the grave. Next he places the basket of porridge and the plate of meat on the mound beside it and retires. Kneeling down outside the gate facing the shrine and a few yards in front of the people he chants his prayer in a monotone, each petition commencing with "Chonde, chonde," "Please, please." All the while the people clap their hands in unison with him and sing the responses as they do in a native case in the chief's court.

When the offering has been made at the grave, the rest of the beer or other food is consumed by the worshippers. Gifts are food as a token of respect to the [535] dead, and the rest of the day is spent in dancing.

Such shrines are to be seen in almost every Yao village where the inhabitants 778
have been located for any length of time. They are regarded with awe—the little 769
boys as they pass whisper to each other in a warning tone, "mzimba." Should the village be moved to any other district, the old shrine is not forgotten. Periodical visits are made to it with the usual offerings. In cases where the old home has been occupied by a people hostile to the old inhabitants, such visits are usually made during the night, and the people awake in the morning to find that the old chief's grave in their midst has been newly repaired, and a fresh offering of food placed at its head.

Sometimes such shrines are found on the summits of hills which once may have been a refuge from the enemy in time of war, but which now lie bare and deserted. Thither in their need the people make their way with their offering of food and beer, and their prayer for rain or suitable weather for the crops. Near Mlantyre such shrines are to be seen on the tops of Mount Sochi and Mount Michiru. The former is the abode of the spirit of Kankhomba, and the latter of Mpalale, both old Mawri or Mang'anja chiefs who doubtless fled there seeking safety from the war of the invading Yaos, and died leaving their wounds to be the mulungu or spirit of the mountain. Some years ago, during the fear of an Angoni invasion, the Yaos of Mount Sochi fled to the hill-top for refuge, and there the old chief Kapeni died. He was buried close to the grave of the old Kankhomba, and now, when the Yaos on Sochi make an offering, it is to the spirit of Kapeni that the homage is paid, and the shrine of Kankhomba lies neglected.

Only the graves of chiefs or headmen are thus treated as shrines of worship 554
The burying place of slaves and the common people lies away in the thick bush, 764
where only the rank grass or the thicket of old trees marks the spot. No offerings 769
are ever taken there, for such as are buried there can have no influence in the 778
spirit world. The dead are buried, the broken pot or basket is left on the grave to mark the spot, and none ever seek to go there save to lay another in the same neglected ground.

II. But the word mulungu is used by the Yao with a wider application. 776
Etymologically the word is connected with the root *kulungwa*, which in so many 197
of the other branches of the Bantu tongue appears as *kula* or *kuru*, and signifies "great" or "old." It is the same root which appears in the Kafir word for God, 192

2: Mitchell E-5 (1946-1949) 1956 FT7 Yao FT7

vomited human flesh.[1] They said that they had a strong headman and that they could trust him; he was a good headman without witchcraft. If he had been a sorcerer they would have kept scolding him until the next morning.

About two hours after sunrise the people gathered and started dancing. At about this time Cimombo was brought out of the hut and put in the grass shed which had been built for the occasion. This was the climax of the ceremony.[2] He sat on a chair in the grass shed with one of his two wives on either side. Makoka then started a chant, exhorting the visitors to come to throw pennies at Cimombo's feet. Some of the people there made speeches about the type of behaviour they would expect from him. Then Nyambi arrived from the court village in a ricksha. When the noise had subsided he told the people that if they disobeyed Cimombo it meant that they disobeyed the chief. He emphasized the importance of the rank of the new headman. After the speech he presented 12*s.* to Cimombo which was received on his behalf by Ncimbo. Nyambi then left and the ceremony was over, but the people remained to dance and drink beer.

This description of the procedure following the 'coming out of the hut' is somewhat sketchy. The interaction of the headman and his villagers on this formal and ceremonial occasion is of great interest and importance. During the entire ceremony the headman adopts the pose which is appropriate for any Yao initiand. His hands are on his lap or on the arms of the chair and his head is bowed forward with eyes downcast. He neither speaks nor moves. His attendants, when necessary, wipe the sweat off his face or chase away the flies. The other occupants of the mat, who may be his wives, and sometimes his heir, adopt similar postures. In contrast to this, is the behaviour of the villagers who run about shouting wildly, the men discharging muzzle-loading guns, and women ululating in the typical Central African way.

Before the new headman comes out of the hut his mentors

[1] This is a test based on the witchlore of the Yao, who believe that sorcerers kill relatives with magic and then share out the flesh of their victims with fellow sorcerers in ghoulish feasts.

[2] Called the 'coming out from the hut' (*kubopoka nyumba*). It is of course the first public appearance of the headman in his newly assumed status.

2: Mitchell E-5 (1946-1949) 1956 FT7 Yao FT7

622 impress on him the difficulty of his position, and when he is taken outside some of this is repeated in public. At Nkacelenga's installation ceremony in December 1946, which I attended, the following incidents took place. Shortly after he was taken out
622 of the hut, Cigunda, one of the officiating headmen, said:
● 537 'Younger brothers of Nkacelenga, are you happy that Kambiri [1] has an elder brother? You women, have you cooked beer so that you can have your village headman?' In reply the men and women clapped their hands and a few came forward to throw some coppers into a cloth at Nkacelenga's feet. Cigunda went on to say, 'From to-day no woman will be impudent to the chief, because you are all of the same womb. All you men listen, only this man is your village headman!' Cigunda now turned to Nkacelenga who did not change his posture in the least. 'You village headman Nkacelenga, don't listen to what your wife says, because she will fight with your sisters and tell you that they have been cursing you. You should make enquiries when you have heard these things because you are a big man [i.e. important headman]. From to-day onwards you are a big man. Every person will be trying to spoil your name by saying that you are a bad man. You need to be patient and easy-going.' Turning to the public, Cigunda said, 'Even you husbands [*akamwini*] do not listen to what your wives say if they try to traduce the village headman, because some husbands can break the village.' Thereupon one husband got up feeling around for a penny, found he did not have one, and with much ostentation borrowed one from a fellow-husband sitting next to him. He then came forward to where Nkacelenga was sitting and said, 'You say some husbands can break a village. Is that true? But husbands build the villages? They can't break the villages.' Then very deliberately he threw the penny into the cloth at the headman's feet and went back to his seat. His speech was greeted with acclamation from the husbands. Cigunda said nothing after that and the ceremony was over.

In September 1948, during the installation ceremony of Mapata,
622 one of Kawinga's less important headmen in the northern
633 part of his area, the significance of the relationship of the headman to his relatives for the continuation of the village as a whole, was brought out more clearly. After the headman was

[1] A perpetual brother of Nkacelenga.

2: Mitchell E-5 (1946-1949) 1956 FT7 Yao FT7

brought out of the hut, as always, songs were sung and speeches were made. One of the songs was : 'A tree when it grows, grows with its branches.'[1] This is a reference to the dependence of the village headman upon the increase of his relatives for an increase in his rank. The Yao compare kinship with a tree, the component segments of the maximal lineage (the tree) being the branches. Then one of the officiating headmen mentioned that there were many sisters' sons of the old Mapata but that Kawinga and Chiwalo had selected the one on the chair to be the headman. He then exhorted the others neither to be jealous nor to resort to sorcery, but to exalt the name[2] that it might live long. This was followed by a song which introduced a second theme, 'A husband however rich he becomes here, cannot climb high.'[3] This song emphasizes that the uxorilocal husbands of the village can never achieve rank outside their own matrilineal villages however rich they are. The officiating headman then went on to say that some women rebuke their husbands when they speak subversively, but others side with them against the village headman. He told the husbands and women that they were wrong to do this and that they must desist. After this followed a public rebuke of the village as a whole. One of the younger brothers of the new headman pointed out that when the mother of the previous Mapata had died she had been buried in the graveyard and not in the village. He rebuked the villagers and told them that, when the present chief died, he should be buried in the village. A man who had been charged with neglect by his wife (his cross-cousin) paid the headman the compensation which he had refused to pay to her. One of the headmen then exhorted the villagers to respect their headman; to send someone to accompany him on his journeys to see to his wants; never to allow the headman to carry a gift he had been given, and so on. The ceremony ended when Kapaloma, who was representing the chief, hinted that Mapata might be allowed to wear a scarlet headband in the near future.

Village headmen, represented the chief at Nkacelenga's and

[1] *Mtere pankulule ukuwo ilamanyambi.*

[2] *Kuwya lina*—to cause the name to climb.

[3] *Tonde, tonde, mkamwini nanilile mano ngakuwela lai.* Tonde is the word for billy goat and its use here emphasizes the procreative functions of the husband in the village.

2: Mitchell E-5 (1946-1949) 1956 FT7 Yao FT7

622 Mapata's installation ceremonies. When an important headman succeeds, however, the chief himself usually makes a short appearance and talks to the people. When Nyenje was installed in July 1947, Kawinga attended. Nyenje has the same clan-name as Kawinga and is an Invader. In 1947, he had 109 tax-payers under him; he held rights to both initiation ceremonies, but he did not have the right to wear the scarlet headband. Kawinga arrived at 11.18 a.m. before Nyenje had come out of the hut and he went straight to it and entered. He emerged at 11.45 and sat on a chair under a drying stand. Kangomba, his head *ndona*, came and sat with him. In the meantime the new headman was brought outside and seated on a chair. Sitting on either side of him on the mat on which his chair was placed, were his two wives. Nsanama,[1] a minor village headman of the same clan-name as Nyenje, officiated. The penny-giving now started. 622 At 12.10 Kawinga got up and walked over to the crowd, and silenced them with a sharp whistle. They gathered round to 527 hear his speech. He pointed out that the dispute about the succession to their headmanship had been going on for three or four years and that there had been two candidates, one of whom he had selected as successor because he knew he would be sensible and wise, and would look after his people in the village and in the smaller villages under him. He said that he had recommended this man to the District Commissioner who, with the Governor's sanction, had supported him. He did not therefore want to hear that the man had fallen ill; he dealt strictly with sorcerers. He said that respect started with the relatives: brothers and sisters, the husbands and the boys and girls must [551] also respect 'the chief'. They must not mention his name but refer to him as 'the chief'. Kawinga went on to say that some husbands were evil and could split a village like this one, by telling lies to the headman and falsely advising the headman that his sisters were talking behind his back and insulting him. When he hears this he may break the village by ill-treating his relatives, thereby causing them to migrate and leave him all alone. Kawinga told the people not to go talking in other villages about the man who was in the chair; that sort of behaviour only led to sorcery. Finally, he warned them to help the headman in obeying the instructions of the White people who

[1] Not Kawinga's relative of the same name.

2: Mitchell E-5 (1946-1949) 1956 FT7 Yao FT7

came to the village and in accommodating strangers while he was away. He told them that disputes were to be referred to the headman immediately. Turning to the new headman he said he had to report anything unusual that occurred in the village, and that he was authorized to arbitrate in small cases in his and surrounding villages. 622 537

Kawinga then left the centre of the crowd and went back to where he had been sitting. Then an officiating headman, addressing particularly the women, said, 'Only a few months ago there was a quarrel between the present chief and his elder sisters. These women ran away to Malemia's area in Zomba district without reporting the matter to anyone. This must stop. With effect from to-day any troubles must be brought to the headman without delay: he will settle them. A tree cannot grow without branches and a headman or a chief cannot be known without his people's respect. Do not behave as children. This man cannot do things alone: he must have your help. We leave him in your hands and we do not want to hear about any more trouble. Follow all the instructions the chief has given you.' He took his leave and Nyenje was taken back inside the hut. The people now dispersed to where there was beer and dancing.

The Structural Reincarnation of Village Headmen and Perpetual Relationships

There appear to be a number of significant aspects of the installation ceremonies. First, there is the ritual death and rebirth of the village headman. The heir is 'killed' by a blow with the fist on the forehead, but is reborn the headman. The Yao do not believe that the spirit of the headman is inherited by the heir;[1] he has only eaten the name.[2] But socially he is born again and, logically consistent with this idea, he takes the wives of his predecessor without further marriage negotiation. He also takes over the property of the dead man, his clothes and his huts. 622 829 [587 428]

But this structural reincarnation of the headman has the important implication that the headman is immortal. He shares this characteristic with the group of which he is the leader. When 622 829 601

[1] As the Bemba do. A. I. Richards, 'Mother-right among the Central Bantu' in E. E. Evans-Pritchard and others, *Essays Presented to C. G. Seligman*, Kegan Paul (London, 1933).

[2] *Kulya lina* is a synonym for succeeding to headmanship.

843 when in child-birth there is delay in delivery it is said of the woman "*Ahalelewe*," "she
● 538 is stuck," from *ku-halelwa* "to be suspended, to be caught by a thorn"; *wajeje*, well dressed, is a slang exclamation meaning "everything, everything is out!" The verse refers, of course, as all obstetricians will recognise, to the moment of crowning of the oncoming head during parturition when it appears to be stuck; then suddenly it slips over the perineum and "everything, everything is out."

843 The *nakanga* now gives way to the songs of the other women. In different districts
533 different versions of the songs are sung, but the other women will quickly pick up the refrain of the song sung by a woman who has come in from some distance.

843 After these songs, the *nakanga* instructs the woman and her husband in the care they must take until after the child is born. Macdonald says, speaking of the instructions "but of the quality, we prefer to be silent."[1] What a pity he allows no one else to judge!

The woman is especially cautioned against sitting with her legs crossed; they must be kept apart lest the child in her womb be suffocated. She is also told many useful things concerning her pregnancy and confinement. The husband is cautioned to cease intercourse with his wife or if he has intercourse, his wife may not lie on her back, lest the child be injured.

While this instruction is going on, all the assembled women cook and eat the feast
[751] which has been made for them. When all has been said, the *nakanga* anoints the man with castor oil, which has in the meantime been warmed, and ties round the neck of the woman the *litiwe*, a cord made of plaited bark-cloth with a tassel in front; at the base of the tassel white beads are strung for good luck, and at the end of the tassel, red beads are affixed, having symbolic reference to the haemorrhage at the time of childbirth. The woman wears only a strip of calico of two hands breadth called *mleta*. She is anointed on the head, body, and limbs.

The tying of the *litiwe* is the sign for dancing to begin. It is a dance in which women try to excel one another. They come with all their tattoo marks on buttocks, thighs, and abdomen renovated; they wear diaper-fashion a narrow strip of cloth, always black in color, and round their bodies numerous strings of beads. With the beginning of the dancing, their other clothes are thrown off and practically naked, they vie with one other in exhibiting their charms and skill in dancing, which afterwards becomes the subject of much discussion among the women onlookers. "So and so is really too old and skinny for such exhibition," and "So and so has buttocks as flat as a wall," while "Such and such a one is fat and beautiful and dances wonderfully, with such *ubundu*," etc. In front of the woman
[431] is set a wooden plate, in front of the man a mat, and on these are thrown donations by the dancers and onlookers, consisting of beads etc., or nowadays pennies and small silver coins to help to pay the expenses of the entertainment and, in the woman's case, to buy medicine which may be necessary should the baby fall ill. When the wedded couple are

[1] *Africana*, op. cit., vol. 1, p. 128.

3: Stannus D-5 (ca. 1912) 1922 FT7 Yao FT7

643 ivory by his own hunting parties or as a kind of tithe on other hunting expeditions. The ground tusk, i.e. the tusk on the side on which the elephant falls when killed, was the chief's share. In the same way, the hind leg on the ground side of any game animal killed was sent to the chief. He took a share of the spoils of war and most of his people yearly gave him either service in building houses, etc., or kind in the form of food-stuffs, but he enforced no service and levied no tax, except for the making of a new burial place.[1] New settlers in his village were expected to invite him to drink beer made with their first crops.

In return, he always provided cloth to invest the body of the dead. He also made presents at the time of *Unyago*.[2]

A chief's life, therefore, may not be "all beer and skittles," though he consumes a good deal of the former and a kind of skittles[3] was a favorite pastime of one of the Malemyas. A saying embodying this idea was used when pleading for a man who had [538] committed adultery with his chief's wife "one who carries a tortoise (on a string over his back) is likely to get his clothes soiled"; a man has to put up with the troubles his belongings bring him. So a chief must bear with his own people who do wrong.

643 Ample opportunity for exercising such forbearance was provided, since the chief was formerly the adjudicator of all disputes and dispenser of justice in all crimes. The headman 692 did the same in a smaller way but appeal could always be made to the chief. Cases were heard by the chief sitting in council. He and his headmen and elders would assemble in the village open space and here cases were stated, often at great length.

Each party to the case would employ some man well known for his powers of oratory as leading counsel. The speaker for the plaintiff would start proceedings by a recital of all the evidence he could collect. After him would follow innumerable speakers, whether actual witnesses or not, each telling as good a story as he could, and the defendant's case would then be put by his representatives. There was no cross-examination but at the end, a summary was made and judgment given. A chief often took the advice of some one of his old men whom he trusted.[4] The chief received no payment for his services, except in the case of murder; neither did the "counsel" receive anything for their efforts.

674 **Crimes.** Causing the death of a person by witch medicine, *usawi*, was the most heinous [754] crime; a *mwavi* ordeal might be held, but if the offense was proved, burning was the punishment which usually followed.

[684] The offense second in gravity was adultery. This might be expiated by payment or by death, according to the circumstances under which it occurred; mutilation was often [696] performed in the case of a chief's wife. All death sentences with the exception of those

[1] Vide supra, p. 244. [2] Vide supra, pp. 248, 264. [3] Vide infra, p. 360.

[4] The old Malemyas (Nakutumbo) has some very fine men among his counsilors. Kumtupa and Chimpila, the latter renowned for his oratory, were his chief advisers in legal matters. Ndaleka, a slave, was his mentor in all personal and family affairs, while Chekazongo was in charge of all ceremonies and served with his assistant, Mpanje, as high priest on all occasions of intercession. Others acted as his emissaries, such as Mkopiti who always went on any missions to the Angoni, among whom he was known as Ndonjira.

881 The chief, having appointed a day on which the ceremonies shall begin, sends a messenger with a fowl to a medicine-man whom he asks to conduct the ceremonies. The medi-
[791] cine-man is called *m'michila* " he of the tails." He carries his medicines stuffed in the tail-skin of a gnu or sabra and we shall see that his tail or tails play a very important part. Having sent word back to the chief of his acceptance of the invitation, he gets his wife to prepare some fresh castor-oil with which he will remake his medicines, and sends out the boys of the village to collect firewood. A big bonfire is made and dancing goes on all that night in his village. Early next morning he returns to the door of his hut where his wife hands him his " tails." He then immediately departs for the village of the chief. His wife
[301] trills with her tongue, this being the sign of his departure, and dancing men, some friend (often his brother) who acts as his chief assistant, his wife, and others will go with him.

[539] He signals his approach to the chief's village by singing:

" *Ku*	*mun'ho*	*nguion,*	*nguion'nal*	*Tinguichal* "
" You	at the	village!		I shan't be long! "

As he enters the village, all the women hail his arrival by trilling the tongue (*ku-lulula*). He goes straight to the open space in front of the chief's house where the chief meets him. The chief immediately goes into his house and producing a cloth, gives it to the *m'michila* who then places his " tail " on the ground, (*sdulila*, "things put down"); these are the signs of the compact. A house is given to the *m'michila* wherein he may rest and sleep.

That night, all the mothers of the boys who are to undergo their initiation, now called *wali* (sing. *wauli*), pound flour for the morrow. Early the next morning, the *m'michila* visits the place where the pounding is going on and collects a little flour from each woman's basket into a small basket he himself carries.

The chief then gives him a cock and a hen, an axe and a hoe; with these he goes off accompanied by the fathers of the *wali* to the spot where *Lupanda* will be made. Arrived there, he first points out the spot where his own hut is to be erected. This is quickly built, followed by the shelters for the *wali*.

The cock and hen are then killed and cooked, also some porridge; the entire fowl is cooked; the liver is not cooked separately. When it is ready, the *m'michila* takes a piece of the liver from the pot and some porridge from the other pot together in one hand and then throws them into a little hole where his " tail " has been resting. At this spot, *Lupanda* is made. The *m'michila* then partakes of both again and eats; after he has finished, the other men eat.

[531] After the building of the shelters is finished, fire-wood is collected. On the roofs of the grass shelters figures of animals in grass may be strung up on posts, but they have no definite significance.

In the meantime in the village, the chief has had *mbepasi* (ceremonial flour) prepared. It is made from millet by his head wife, who must not be near a menstrual period.

When the sun sets, all the boys to undergo the ceremonies (*uali*) together with their sponsors or guardians, *akamusi*, (*mkamusi* sing.) are called together to the village open-space (*pang'anga*). The *mkamusi* attends his ward throughout the ceremony; he may be an elder brother, an uncle, or someone else who volunteers for the service. 881

The *uali* are lined up and headed by a "leader," *nachilongola*, who is usually the most important boy, perhaps a relative of the chief; thus they pass one by one in front of the chief who anoints each on the forehead with *mkepesi* from a small basket. As each boy passes, his mother runs up and throws into the basket a string of beads or nowadays small silver coins. When all have passed, the chief sends some near relative with the basket still containing some flour and the beads or money to the *m'michila* who is waiting at *Lupanda*.

This is his signal to prepare to receive the *uali*; he dresses, and accompanied by drummers goes to meet the file of *uali*. The *uali* accompanied by their *akamusi*, their mothers and sisters, sing as they approach: 881 539 533

"*Tunje kanga (unpapo) ukakuli tunje!*"
"Let us go back, perhaps there is no ceremony!"

The *m'michila* as he meets them sings:

"*Anachichi pakwiza nawo wanache'wa kulaka hilombe kwiza nalyo!*"
"Why to come with them these children to leave (a small drum) to come with it?"

and follows this in answer to the song of the *uali* with:

"*Ku nkuli mkanja,* (Repeat) *Kwa kwa!* (Chorus) *Mkanja wose!*"
"To the village don't go back. Don't go back all!"

The *uali* now on the outskirts of *Lupanda* are formed into a ring, behind them their *akamusi* and behind these their mothers and sisters. Then the *m'michila* leads the way to *Lupanda* singing:

"*Lilumbo lya ndembo!*"
"Spoor of an elephant!"

Next, he calls all the mothers to form in two lines resting at right angles on *Lupanda* and sings to them:

"*Kapungu tula pasi kwin'ansi kwangali ulonga!*"
"The eagle lighted on the ground as in the air there is not near relationship!"

The *m'michila* and his chief assistant each provided with a "tail" strike lightly on the basket which each woman has on her head; then each with a hand on the basket, they lift it down to the ground. Starting with the mother of the "leader," they go round to each mother in turn. The *m'michila* then to the sound of drums and clapping by the women dances and runs round peeping into each basket exclaiming, "I see so and so in this basket!" saying noses, penes, medicine, women's pudenda and so on, after which the women take the baskets of food away to the boys' shelters. The *m'michila* next sings: 881

881 533 539

"Tingumbile mwanangu ku Lupunda, pingu uje'pa kundanda mungunga!"
"I will go and bring my child to *Lupunda*, when I am going home I feel nervous!"

and running round he seizes hold of one of the *wali* and makes him sit down at *Lupunda*, continuing this until he has placed them all in a circle round *Lupunda*. He then sings a song about the little basket which the chief sent him containing the remains of the *mbepesi* flour:

"Kasala angwe akwalikiya, nepula mbwemunda, amai!"
"Little basket the owner asks for it back, give me beans, mother!"

His wife who has been waiting in his hut nearby brings him the basket. Holding it in his hands, he prays to the spirits of his ancestors and all the previous medicine-men to whom his medicine-tails have belonged, invoking their aid that the ceremonies may go well.

Still holding the basket he begins to dance, singing:

"Apakale mbepesi jaai!"
"Let them (us) smear flour their (Let us baptise them!)"

and dipping his right elbow into the basket he smears each *mwali* on the forehead with the *mbepesi* flour. He then goes into his hut and fetches a bundle of powdered roots (which no woman may touch), medicine called *mtibula*, that is, a medicine used for its aphrodisiac properties. Holding the medicine between the palms of his uplifted hands, he starts singing:

"Kukwaimanga kuchipopola, twatuwanga mlomu!"
"I cannot find out how to untie this, we tied (with) my brother-in-law!"

He is immediately surrounded by his assistants and the drummers, who dance round him, all holding their hands about his own, after which he unfastens the bundle of medicine and puts a little on the tongue of each *mwali*, beginning with the leader. He then takes some sweet-beer made by the chief's wife and pouring it into his old medicine-gourd, he mixes in some *mtibula* and gives some to each *mwali* to drink after which he sings:

"Amwela,[1] *amwela mwanje wa imanga, chakulya mandanda*
"You have drunk a mixture of water and maize flour, of eating eggs
achilecha panapano, Amwela, amwela ndundile mahesu;
you stop now, you have drunk (but) I have passed water (in it);
wali(ji) halamuka!"
you thought to be clever!"

[302] Next he goes into his hut with the small basket containing the *mbepesi* and paints his assistant with the flour, a semicircle round the forehead, a line down the middle of the face, a band across the chest, a line down each arm with rings round the arms and forearms, and a line down the middle of the back. They go out again into the ring and while the *m'michila* sings:

[1] This may be a reference to *amwela*, the sacrificial cup.

3: Stannus D-5 (ca. 1912) 1922 FT7 Yao FT7

881
533
539

"*Nampepe*	*kondola*	*chiongo*	*anwali*	*ku malombe*	*kwendela*	*kwafa!*"
"The lizard	casts	lots	boys	to graves	as to going	to die!"

his assistant with the basket held in his mouth acts the part of the *nampepe*, a medium-sized lizard with brilliant blue body and orange head which bobs its head up and down. The assistant lies on his belly and bobs his head and shoulders up and down, lifting himself on his hands. (Children often clap their hands as they watch the *nampepe* bobbing up and down "like a lot-caster" and call out to it to cast lots for them.) The assistant then crawls up to the leader and puts the basket on his head. Bowing his face to the ground for a moment, he again takes the basket and places it on the head of the next *wuali* and so on all around.

After this the *wali* go and sit near the bonfire which is not yet lighted, while the *m'wichila* sings to the women:

"*Ngand(a)*	*atalache!*	*kajuala!*"
"The beans!	Let him cook	a cricket."

and the women give him a basket of beans with which he makes sifting movements, singing: "Shall I throw them away, shall I put them in the cooking pot?" while the women clap.

His assistants are then told to go and light the bonfire. He himself goes to his hut and places his "tails" in the *nkepesi* basket, and carrying it to the bonfire, he throws some of the flour on the fire, "to regulate its heat." This is the sign to begin the dancing which goes on all night while the *wali* lie round the fire, each lying with his head on the waist of the next, the leader in front.

In the early morning of the second day, the *m'wichila* holding his "tails" in his hands runs astraddle over all the reclining *wali* and facing the same way, runs back, after which the boys are called.

He sings a song:

"*Masalau*	(a) 'go	*kundumaga!*"
"The red ants	those	bite!"

and he pretends to pick them off the boys. After this, he sings:

"*Nahdumi*	*hongo*	*mhakuligwe!*	(*mhakuluguwe*)!"
"Push	clitoris	little mother!"	

as he goes to each *wuali* and throws his "tail" into the boy's hands, receives it back and then puts it on his head till the mother places a coin on his head which is the payment made to the assistant. *Ku-luguwe* = to occur; *ngaluguwe* = not at home; *mhakuligwe* = is it not at home, is it not present? The meaning of the phrase in the song is, "Is your mother not here to pay the fee?" *Mhakuligwe* is a pun on *mhakuluguwe*, "little mother." This is followed by another song:

"*Kapindi'gwe,*	*ugwe*	*ungwa*	*mtela!*"
"The little lemur,	you	jump from	tree to tree!"

881 as he climbs a tree with his back to the trunk; at the top he hangs by his legs and looks
533 down on the crowd, his assistants doing the same. Coming down he runs to his hut; throw-
ing his "tail" into the air and catching it again, he enters.

539 This is about nine A.M.; all rest till about eleven o'clock, the *wali* meanwhile eating food cooked by their mothers in the shelters. About eleven o'clock, the *m'wichila* takes a big gourd and putting his "tails" into it covered with a calico cloth, gives it to his assistant who carries it on his head and follows him to a pool of water, accompanied by all the women except any young ones who have not borne children. He invites them to go "crab hunting."

At the pool he enters the water with his assistants round him, except the assistant with the gourd, who stands on the bank. The *m'wichila* makes movements as of hunting for crabs in the water singing:

"*Chisasapula* *upuli* *upuli wungu* *usuma!*"
"There must be hunting otherwise I should have had to eat porridge *my without relish!*"

He pretends to catch a crab and his hands are immediately grasped by his assistants in the water who all help him to convey it to the gourd as the "tail" is taken out of it.

881 The crowd then returns to *Lupanda* to enact the *nambunda* ceremony. *Nambunda* is a representation of an animal made of bark on a frame-work covered with mud and painted with flour in spiral markings, hence the name (*nbunda* is a part of a spiral shell from the Zanzibar coast much prised by natives as an ornament). The animal is really the sable antelope with horns and the *m'wichila's* "tails" in place; there is a man inside it. It is made perhaps a mile away and then brought near to *Lupanda* and placed in a cleared area.

The *m'wichila* on his return from crab-hunting has gone into his hut and put on his full regalia; then, accompanied by his drummers, he comes out and is immediately followed by the *wali* and the rest of the crowd; knowing where the *nambunda* will be put, he leads the people in the opposite direction calling out to them to look out for the antelope. They, of course, all look in the wrong direction, so when he knows *nambunda* is in place, he wheels around and sings, "There is the animal!"

In the old days the chief was present for this, a platform being built for him. When the *nambunda* appeared, he gave his hunters much powder (no bullets) and they shot at the animal. The animal would fall as if hit and the *m'wichila* would approach to claim it as his beast, but it would promptly get up and charge, to be driven off by the crowd, whereupon it would run away into the bush.

Lots are then cast by the *m'wichila*, using a tortoise shell stuffed with medicine. The *wali* all stand in a circle with their mothers behind them, while the *m'wichila* goes to the
[779] leader and throws the tortoise at the boy's chest. If it sticks there, all is well and he proceeds to each boy. Should the shell not stick on the boy's chest, it portends ill-luck to that individual and he has to be dealt with further. The *m'wichila*, holding his "tail," and his assistant holding a horn of medicine, stand back to back, with the boy between

them. They then rub the boy up and down with their backs, after which the assistant throws the horn at the boy's chest. If it sticks, the bad-luck is overcome and the women will trill joyfully with their tongues; if it drops to the ground, evil is foretold and forebodings as to the boy's fate at *Ndapula* are whispered round. He is given further medicine against the predicted evil, but lots will not again be cast about him. 881

881
533
539

Next the *w'mikhila* sings:

"*Nanchachove* *nanumbo,* *wanjako* *apanana,* *jina* *apanaje*
"The one who scrapes hairs, (your) father is still living, come that I may shave thee,
nanchachove *nanumbo,* *wanjako* *apanana!*"
the one who scrapes hairs, (your) father is still living! (Chorus) "*Jandi, jandi!*"

Jandi is a word meaning "sticking up in all directions" and refers to the hair.

One assistant holds a pot of water, a second, a leaf of the *mpondo* tree, and the *w'mikhila* a razor. They approach the leader; water is rubbed on the forehead by the first assistant, the second smears the place with the leaf. The *w'mikhila* then removes a little tuft of hair from the boy's forehead and puts it in the boy's left palm, followed by the nail parings from the left hand, and a tuft of hair from the back of the head. This is done to each *wanli* in turn after which he sings:

"*Tanaaje* *kipalamandala!*"
"Let us shave them" (*ku-palamandala,* to trim by shaving)

as he walks round them, after which the boys go to their mothers who are allowed to trim the hair on the forehead in any way they like. This may take ten minutes, after which they return, still holding their hair and nails in their hands. As they return, the *w'mikhila,* thrusting his "tail" under the left arm, starts off, all the *wali* falling in behind him, and thus he leads the way into the bush accompanied only by the *wali,* singing:

"*Kapili* *ka* *mnale!* *ananili!*"
"The Kapili make the mnale tree *ananili!*"

He searches through the forest until he finds *chilude,* a small dome-shaped ant hill about a foot high. He carries his "tail" under his arm and a reed-buck's horn of medicine in his hand. Arrived at the *chilude,* he chips the top off the ant hill with the horn and his "tail," scoops a hole in the exposed surface with the horn, and then smears this hollow with medicine from the horn. The leader then approaches and drops his hair and nail parings little by little into the hole, followed by each *wanli* in turn; each immediately turns about and never looks back on the ant hill. When all have done so, the *w'mikhila* sets the top of the ant hill back into its place, having the "tail" and medicine horn in his axilla; he then turns about and becomes the last of the file as they march back to *Lupanda* while he sings the same song as before.

This particular ceremony is the most sacred of the *Unyago* as it is known only to the *wali.* It is the sign of burying the past of childhood. If another *w'mikhila* could find such

881 a piece, he would take part of it and its contents and add to his own medicine " to make him a more powerful *m'michila*."

533 On the way back, the *m'michila* takes a piece of bamboo in his right hand and when he
539 comes to a *mjombo* sapling, the boys all surround him in a ring; with the " tail" in his left hand he strikes the *mjombo* sapling, and as it rebounds, he strikes it with the bamboo; while the sapling swings backwards and forwards, he sings:

> " *Ngama* *ngamama* *mlasi* *ni* *mjombo!*
> " Striking I have struck together the bamboo and the mjombo tree!
> *hakinolela!* *omuli* *hakinolela!* "
> *sharpen for yourself* "

The *m'michila* takes both his " tails." Holding them in his left hand against the *mjombo* sapling, the bushy part of the tails uppermost, and in the other hand a stick smeared with beeswax, he rubs the sapling at a point just below the " tails," still singing the song given above. The stick is said to represent an axe. After this, he takes a real axe and cuts off the top of the sapling. Then all the boys seize the sapling and work the bark off without cutting it anywhere, while the *m'michila* continues to sing. The bark he puts in his armpit and sings as he jumps about:

> " *Tinjipwila* *pepenje,* (*hichenje*) *chipulubu* *pulubu!* "
> " I shall fall into the pit, jumping about here and there! "

When they arrive at *Lupanda*, the *m'michila* unseen goes to his own hut to make string from the bark, the boys to the place where *Lupanda* is made. This is at about three in the afternoon.

When the string is ready, the *m'michila* takes it to cross-roads, plaits it into necklaces, and anoints them with medicine for the *usili*. On his return to his own house, the mothers have cooked porridge for the boys, and the baskets of food are put ready at *Lupanda*. The *m'michila* then steps in and sings:

> " *Tulo* (*uji*) *winji* *wuna* *amao, wumpe unkwapamilupa!* "
> " (A) little mouse (has) many children, mother, all are to be fed! "

As he does so, he takes some food in his hand and puts it into the mouth of the leader, and so on all round, while all the people keep at a distance. Then with a hoe he makes a small mound where *ching'undo-ng'undo* will be erected and puts on it a little of the *nkupusi* from his house. Here he seats the leader and round him sit all the other *usili*. The *m'michila* then sings:

> " *Tinowuda* *chuma* *chanyu* *lelo hunkujin'ko* *ahwanupula* *ngwunjila!* "
> " I will take off heads my today where they go to it seems they will never come back! "

[1] *Ku-wula*, to what a hole.

He collects from the boys' necks the beads they are wearing, lifting them off with his mnfhelwa horn; these are all his perquisites, to be sent off to his house. He then starts singing: 881 533 539

"*Nwhilimpala Lupunda upuwa upulumpwa pelele julumunupa, mahile!*"
"The leader (of) *Lupunda* (is) an animal big worth killing with a spear, tail!"

This means to the leader's relatives that the boy is worth a spear; one is promptly brought and leaned against the leader; the *w'michila* steps up and taking it, bends the spearhead and sends it towards his house. He then sings:

"*Njojoka* *nati* *kalungu kwejoka* *nati*
"Things which are put to lean up against even little sugar cane to lean things up against even
kupunda kwejoka!"
little arrow!"

The relatives then bring all kinds of presents and lean them against the boys; these are the perquisites of the dancing men. The *wali* go away to eat now with their *akawusi* behind the shelters. The *akawusi* tie up any food that is left in leaves, for later use. They then return to the roughly-made *ching'undung'unda* where the *w'michila* meets them. The *wali* stand in a circle round him and outside them in a ring, the parents, while the leader is set on the *ching'undung'unda* mound.

The *w'michila* sings:

"*Anunjati ulunga pa mtu'pa tupusi* *uinuli, ulunga, umbiwunjai!*"
"You of the buffalo hair (lit. feathers) on the head you put four *ulunga* call me."

as he then goes around and touches each *wanli* with his "tail." The idea here is that the *wali* with four on their foreheads resemble buffaloes which have white patches on their horns, and they will therefore be as strong as these beasts in the bush whither they are about to go.

The *w'michila* then runs away to his hut and breaking a hole through the back, makes for the bush. The assistants know this disappearance is the signal of his departure for *Ndapula*. This happens about four o'clock. All exclaim "*Aoosh!*"; (to exclaim thus is *kusowiva*, "to exclaim with apprehension.") The assistants head off in the same direction, followed by the *akawusi* and their *wali*, while the mothers of the boys who may never see them again, throw sticks on the path as they run away as the sign of forgetting their sons for the time being. 881

All the men will also accompany the *wali* until they find the *w'michila*. He having left the chief's basket at *Lupunda* has brought some of the *ulupusi* with him in his own basket. One of the men brings a gourd full of water; the *w'michila* pours some of the water into his basket of flour and gives a drink of this first to the leader and then to each *wanli*

881 in turn. After drinking, they sit down while the n'mikhilo gives instructions that here they sleep tonight. He takes his basket and starts to run back to *Lupanda*, singing:

[533 539] "*Ee* *hwajile* *pilelaje* *ukumalaje* *hulanajive* *ku M'unde!*"
"Where we want to *mustare* to *M'unde!*"

Then going to the back of his hut, he enters and takes a piece of bark left there hent up into a dish containing medicine which has been put in by an assistant. This assistant holds in his hand the neck of one of the fowls which was killed at *Lupanda*. The n'mikhilo washes his face and chest with medicine to cleanse his eyes and then leans forward to the assistant and bites a piece off the neck of the fowl which the assistant holds out, and eats it. This is *ku-lumiza*, "to taste a small piece," often the liver, before starting to eat the flesh; this is generally done by the most important person. The n'mikhilo has been followed by his assistants who do as he has done. They all follow him next round the cooking place for the boys at *Lupanda*, each standing for a moment on the stones which have supported the cooking pots, while the women sit looking on sadly. He begins to dance and the women join in, singing *Ikwete*. He then calls the parents of the *unli* and leads them to where the bonfire was. There assembled, he tells them they must not bathe, and that tomorrow morning early, porridge is to be sent to the *unli* which must be prepared by a woman who has had connection with her husband and who has not washed her hands; this is supposed to make the boys strong. Early in the morning, the husband, who likewise has not washed his hands, carries the food to the *unli* and personally gives portions to each boy to eat.

881 304 When they have partaken of the food, the circumcision is performed by the n'mikhilo who has returned the same morning early. The *unli* one by one, commencing with the leader, go forward a little to the place where the n'mikhilo awaits them. Each *unli* is accompanied by his *nkomwai* who commonly says, "Come along and you shall eat of the honey made by the bumblebee." Such honey is very sweet and called *mawa*. This refers in sarcastic terms to the pain the boy is about to undergo. The boy squats down, leaning back on his *nkomwai* who supports him, while the medicine-man, having warned the lad not to cry out, performs the circumcision with a small knife called *chiwanda*. It is a triangular knife with one cutting edge and a handle produced from the opposite corner. Properly the Yao method is, I believe, only to nick the free margin of the prepuce just to the right of the middle line near the frenum, but complete circumcision is now commonly practiced, possibly as the result of Swahili influence. In this case, the prepuce is seized and held by the fingers, and division made by a circular incision without using a clamp or forked stick. A dressing of charcoal and oil may be applied or medicine is chewed in the mouth and the saliva spat on the wound and the boy sent on to rest under some convenient tree.

[412]

[752]

When all the *unli* have been circumcised, they are gathered together in one place and the n'mikhilo dividing them into groups, puts on the neck of the leader of each group a necklace made of plaited bark from the *mpondo* tree;[1] these necklaces contain medicine against all evils - witchcraft, attack by lions, etc.

881 [751]

3:Stanner D-5 (cn. 1912) 1922 FT7 Yao FT7

some sweetener into a big gourd. Then his assistants will carry away, together with a hen, to *Luyenda*, whither the *n'wichilo* now goes to remain while brewing goes on for four days. 881 273

During their stay at *Luyenda*, the *n'wichilo* and his assistants live on flour and chickens begged from the mothers of the *wali*. On the first day nothing is done; on the second day they begin making the *Inyapo* or figures in relief of animals, etc., to be described later; *Nwenyanni* is made this day. On the third day the other figures are made and on the fourth day *shing'wedong'wede*. Into the ground where *shing'wedong'wede* is made, some of the strong beer, known as *ngungu*, which is added to the flour and water mixture on the fourth day as signified by *Ba-lokojolo*, is poured by the *n'wichilo*.

When the work at *Luyenda* is finished, the *n'wichilo* carrying his "tail" leads his assistants wearing their feather headdresses back to the chief's village singing:

"*Ninguhlo ukuwa kwaya ukulojolo ka wani, wulungu ukwanani* [533
"I must go and see beer perhaps they have mixed at the village, ancestors oh dear! 534
Chikwale ukwanjani ngulya ewa ninguwale mlo!"
The going out of a day or two ago if I had not taken relishes I would have died of hunger!"

Arriving at the village where the brewing is going on, the *n'wichilo* takes a cup and putting his "tails" on the ground, he dips into the pot of beer belonging to the leader's mother, pours some on his "tail," and then drinks some. Then he puts some into a gourd, together with some medicine, and going up to the chief who sits in his verandah overlooking the brewing place, he kneels, and first drinking a little himself, he presents the drinking gourd of beer to the chief who drinks and then returns the cup to the *n'wichilo* who finishes it. Picking up his "tail," he then goes straight back to *Luyenda* while his assistants with some men nominated by the chief go round circuing pots of beer in turn. The assistants choose by striking a pot with a medicine-tail. These pots of beer are then put aside to cool, while moderate drinking begins in the chief's house. This takes place in the morning of the day on which the *wali* will return from *Nilapale* to *Luyenda*, and in the afternoon, the people from the villages will go out to *Luyenda* to take part in the return. The return is made about sunset.

The *wali* at *Nilapale* are put into their shelters and the doorways barricaded. At sunset or just after, the place is set on fire and the *wali* have to charge their way through the bark of the shelters. They then form in line, wearing a slip of bark cloth round their loins and over this, a kind of kilt called *nwapiawa* if made of frilled-cut bark-cloth, or *nwiyaya* if made of palm leaves. Accompanied by the chanent, they proceed towards *Luyenda*, each carrying a stick of smouldering wood and an unlit torch of bark-cloth. 881 [292]

The blowing of the horn at *Nilapale* has been the sign to the *n'wichilo* that the *wali* have left; he puts round his waist a bark cloth belt, *chambe*, and a calico sash round his chest with the ends hanging down behind and on his head he wears the *lisuga* headdress made of the feathers of *chinyapa*, the widow-bird. In each hand he carries the tail of gnu or zebra, hold right end up, with the hollow end filled with "medicine." Thus arrayed, he goes out 881 533 534

3:Swanson D-5 (ca. 1912) 1922 FT7 Yao FT7

961
S33
S39

along the path towards *Ndapula*, to meet the wali, accompanied by the drummers and all the women, singing:

> "*Mdawala* *kwinyuda* *wala!*"
> "The lemon down the stream!"

When he meets the wali, they all throw their lighted torches at him and he flees back to *Luyanda*. The wali continue their procession and are brought round to the still unlit bonfire known as *chilungali*.

At the order of the w'mishile, the fire is now lighted and the wali lie around it. The w'mishile again appears with the drummers, and all the women and other villagers form a big circle round about. He sings:

> "*Chondola* *chilungu* *ulaja,* *wanda'wa* *chilungajaga!*"
> "The (lord) fire is now flaring up people there it is afraid of them!"

Dancing and singing then go on all night while the wali lie round the fire where they are allowed to sleep. As dawn approaches, the w'mishile again sings:

> "*Chonde!* *Mwalwa,* *wanali,* *Anawa* *wamunda,* *ulala*
> "Please! it is crying, you girl, arouse the child, the girdle of beads round its waist
> *wamunda* *chiyagawa!*"
> has been in separate of the parents!"

Anawa: a woman carries her child bound to her back by a piece of cloth passing under her own arms and tied in front. If the cloth gets loose, she jogs the child up higher on her back as she rearranges the cloth; this is what is meant by *anawa*.

The *chawusi* wakes the wali as the w'mishile sings:

> "*Kwandulwa* *wala!*"
> "To wake after the wali!"

That is, he is looking about for the *ingaga*. He then leads them off to *nahumpawi*, the whale, the first of the *ingaga*.

I shall first go on with an account of Mlenzale's practice to the end of the ceremony and then discuss the *ingaga* in greater detail.

Arrived at *nahumpawi*, the w'mishile sings;

> "*Nahumpawi* *nalimola,* *nahumpawi* *nalali* *kwikika!*"
> "The whale is the pool, the whale has blocked the land!"

after which he straddles the head of the whale while one of his assistants does the same at the tail and thus sitting, they do a kind of wriggling dance, singing to the time marked by clapping of hands:

> "*Nahumpawi* *akwikwinda, ah! ah!* (Repeat) *Ayakupula* *wala kwiliwa;* *ayakupula*
> "The whale showed his back above the water, ah! There it did fall me; there
> *wala kwiwaliwa;* *Eee, ee, ee, ee!*"
> it did fall beside;"

3:Stanana D-5 (ca. 1912) 1922 FT7 Yao FT7

The n'widdle then gets off on the left side, his assistant on the right and they stand in the shallow depressions. The n'widdle starts asking riddles; he says, "*Ndawi* (riddle)!" and is answered by his assistant "*Jiche* (let it come)!" Here is one: 881 533 539

"*Kwapere, hapile pwel!*"
"The little mouse it has defecated, it has gone into the ground!"
Answer: "*Midziphi* (roots)!"

He then goes round the crowd for the answer—if they cannot guess, they say, "*Ali ungwe,*" "it is yourself (to answer)." There are hundreds of such riddles.

The n'widdle points to the tusks depicted in the *chinyago* and tells the people, "Long ago this used to be an elephant; look at the tusks." The hump at its back he tells them is the same as *ching'wadang'wada* which they will find farther along.

They pass next to *ndwanda*, the zebra; a pair, male and female, is always figured.

"*Ajiji ngati ndwanda ja ndwajo Ndzilimwalo! Yawaya pakalo!*"
"This one is it not the zebra of Mister Mkumalo! everything (is) beautiful!"

Sometimes a story is told to show that the zebra used to go to the sea to drink but swing the whale, he ran away and came to the country of the python.

Then to *nsin*, the python; he sings:

"*Anasin hanjingili pawa, ejo! Yawaya pakalo!*"
"You python come and answer! all (is) beautiful!"

At the crocodile, *ngwena*, he sings:

"*Chingwena ndwalo, pawa! ejo! chingwena wanyakapale mwal!*"
"Mr Crocodile devourer, he sleeps at the side of the water!"

At *mwezi*, the moon:

"*Amwezi ndwalo, pawa! ejo, mwezi!*"
"You moon devourer, !"

Next, they come to *nchidzi ndwalo*, the people drunk with beer. Two men lie on the ground, feet to feet with nothing on; the pudenda are covered with bark-cloth and the whole of their bodies painted with earth and flour to look like two female figures in earth. The song is:

"*N'chidzi ndwalo: hanchidzi mwanali, nchidzi ndwalo!*"
"Drunk with beer: come and see the women, drunk with beer!"

A mzuni is painted: the disguise is a woman who gets drunk, lies on the ground, and exposes her person. As the n'widdle makes these remarks, the figures breathe stertorously as a drunken woman would. He conducts the wali and all the other people post many of the other images such as *chiwi*, *ngoko*, *ndwanda*, *nduzi*, etc., and only stops at those he considers his own special *ingago*. The seven specially dealt with by Mkumalo were as above together with *ndzilwyi*, the noble antelope: 534 649

681
533
539

"*Asandabaya* *ahunda, pempe* *pakata!*"
"Two mide *death, everything* (is) *lonely!*"

Next comes *shandada*, the fairy. There is no image but two posts represent the fairy; the *n'mishila* stands on one side of the two posts with his two assistants opposite him, one holding a bunch of leaves, the other a burning log: the first fans the log of the second, using leaves as bellows, while the *n'mishila* sings:

"*Hyanda,* *nyanda,* *hajikatata, nyanda!*"
"The female pushada, where it pushes itself!"

after which the serf one by one are pushed through between the two assistants. *Chandada* signifies the passage from one part of the ceremony to another; here, from the *tapage* to *ching'undung'unda*. *Ku-jandada* = to cross a stream.

As they reach *ching'undung'unda* the *n'mishila* sings:

"*Ching'undung'unda* *undimbidila* *pingaya* *ngua* *jakuyandala* *undimbu!*"
"Ching'undung'unda I have marked out if it were ashes distinctive of *chiefs!*"

One of his assistants is told to go and get a pot of beer. When it is brought he sings:

"*Asandi,* *kamunda,* *nawila* *kanyama!*"
"You girl, little fly, wash your hands behind you!"

681
533
539
608

This is the sign for the woman who volunteers for the service to the leader, to come forward, followed in turn, as each *mundi* is dealt with, by other women. The woman stands back to back with her *mundi* and they hold hands, while the *n'mishila* comes and pours a little beer on their hands; they make movements as of washing the hands and then separate, the woman rejoining the crowd, the boy standing to one side until all have performed the rite. This woman ever afterwards is treated by the *mundi* as his adopted sister. After this, each *nkomwai* takes his *mundi* into the bush near by and holding the boy's cloth over the lad's head, he waits there for the boy's relatives to come and redeem him with beer. It is a point of honor that as many relatives as possible shall turn out to show that the boy is much liked, this being, of course, so much the better for the *nkomwai* who gets a present from each. The *nkomwai* then uncovers the boys' faces and hand over the lads to their mothers who take them away to rest in the shelters.

The *n'mishila*, meanwhile, has withdrawn to his hut, where all the relatives later collect; he then comes out holding his "tail," singing:

"*Kwenda* *ahujuje* *ahwanagwa* *fuga!*"
"Come and bathe those who love to bathe!"

Each adopted sister or woman guardian takes her *mundi* brother on her back and carries him off to the stream to bathe. The woman sets her *mundi* down on the bank and then leans across his back while the *n'mishila* comes along and dipping his "tail" into the

3:Stanner D-5 (ca. 1912) 1922 FT7 Yao FT7

881
539
539
608

stream, sprinkles the boy on the chest with the water. Then the positions are reversed and the woman receives the "tail" on her chest, after which they plunge into the water and bathe, each pouring water over the other. The woman rubs the boy's back and he in turn shyly rubs the back of his woman guardian. Clothes are not removed. Everyone looks on.

While this is going on, the n'uinkila and his assistants build a kind of fence across the return road; as the people start back, he sings:

"*Mate mungu* *ahawaa* *nanapawa* *wakwaka nanaka!*"
"*Five my* *they are buying* *I myself* *they give me the spirits!*"

that is "everyone has got to buy from me the gifts I myself have from the spirits." As each woman comes up carrying her *nsuali*, the mother runs out and makes a payment to the n'uinkila so that her son may be allowed to pass. The boys are carried back to the *shalimo* where they rest. The mother of the leader cooks food into which the n'uinkila puts medicine; he then gives some to each *nsuali* to eat, after which they partake of the food prepared by their mothers, while the n'uinkila goes to the village for the beer drinking, returning in the afternoon. In the interval the dancing men dance *chawala*, etc.

881

Oil standing in separate basins on the ground has previously been prepared for anointing the *nsuli*. The n'uinkila takes each basin and passes it across the palm of his hand on which he has smeared medicine, each basin being set down on the ground again. Taking a stick, he smears it with medicine from his "tail," and he dips it into each basin. He then comes with his "tail" to detect any woman who may have had any sexual intercourse instead of remaining continent during the stay at *Ndapala*. He dips his "tail" into each basin of oil in turn and holds it up for the oil to run off. If the oil runs off in a stream, the mother as she stands behind her basin of oil is welcomed as a good mother; if the oil runs off drop by drop, "*ndidi*," the woman is laughed to scorn. Her basin is changed for that of another woman or her oil is thrown away and some from another basin is put in its place so that no harm shall result to the boy.

The *ahawaa* then take the boys into the bush near by. The *mapajawiza* dress is removed, the body anointed with the oil, and fresh bark-cloth dyed black is put on. Little bows and arrows are made of small branches and grass and with these the *nsuli* shoot as they again enter *Lapanda*, putting the bows down on *ching'undang'unda* to the trilling of all the women present.

Immediately after this, the return is made to the village, just after sunset, the women having been busy gathering up all their belongings, while the boys were being anointed.

Some of the assistants lead the procession, the *nsuli* following in single file, all naked and walking very slowly, dressed in the new bark-cloth round the loins, with many ropes of beads round the neck and body, a headband of bark, and down the back a string of beads to which is attached a tassel. Each carries in his hand a wand about five feet long, *ngungu*, with a pattern burned in the shaft and two rattles, *masuwa*, affixed at the upper end.

301

253

88 While the unli then march solemnly along shaking their wands, the assistants begin singing:

"*Ku* *mlango* *amatwa!*"
"To the gate they have shot!"

[53] [534] to which the unli reply:

"*Kusowa* *kwakupita!*"
"There is no place where to pass!"

The *m'mikhilo* remains at *Lupunda* till everyone else has left; he then runs fire to the shelters and leaving without looking back, runs to overtake the procession and then leads it on towards the village still at a slow pace, while all around is a yelling crowd of delighted mothers and other relatives and the assistants and drummers, all singing and shouting.

When the outskirts of the village are reached, the *m'mikhilo* halts and waits for the *chief* to come out and give them permission to enter. The *chief* brings calico which unrolled on the ground measures the length of the procession of unli. Headed now by their leader, the unli walk over this calico, while the assistants roll it up behind them for the *m'mikhilo*, as it is part of his payment. Flour may be brought him at the same time, carried by the chief's wives.

At an *Unyago* I witnessed at Kumisama's, the halt was called on the bank of a stream at the edge of the village where a bamboo arch had been erected. The arrival of Chief Malenya at this point with calico and flour was the sign for a demonstration by his young men who ran forward as if in battle, firing off blank rounds from old Tower muskets and executing a kind of war dance.

After the calico has been handed over, the *chief* returns to his kraal and the procession continues into the village, across the village open space to the fence round the chief's house. There, the unli enter by a gateway and disperse over the courtyard where they find their sleeping-mats laid out ready for them by their mothers. The *m'mikhilo* lays his "tail" on the leader's mat to bring good luck thenceforth. With *Mlenula*, there is no further part for the unli, but in some cases they are called upon by the *chief* to give an exhibition of their dancing and drumming. The unli sleep that night in the kraal and disperse the following day.

[77]

In the morning, the *m'mikhilo* takes his "tail" and a stirring stick made from a millet stalk with the roots on it, and strikes the ground at points in a row in front of the chief's house. Here the pots of beer which have been prepared are placed in rows, those chosen by the *chief* and those chosen by the *m'mikhilo*, and drinking commences. The *m'mikhilo*, before he joins in, takes the unli to an ash-heap in the village and there sprinkles them with medicine from a grain-mortar after which they go with their *shamwi* behind a house and change into new clothes. They then go and salute the *chief* by clapping their hands and depart to their villages, duly initiated and somewhat subdued by what they have been through. Their new names as "men" may be given them by the *shamwi* either at *Lupunda* or after the return to the village.

[273] [54] [555]

778 gives an excellent idea of the average figure; it is circular in plan, often with a little hillock in the centre known as *kabundi kampopoli*, "the hill of debt," and disposed in the quadrants are four depressions.

881 When the wali are introduced to *Chinyanu*, they stand round in a circle while the
778 *m'mishile* stands in one of the depressions with perhaps two of his assistants in others. The *m'mishile* sings:

533 "*Ngwa kampopoli chimpopoli mumpoto ningwelile kwilombo, ammi*
539 "The lake mountain was I born child I would have died on the plain, mother!"
Ningwelile ningwelile"

or

"I have lived by the great lake all my life; I should have died in the plain."

while all three make movements as of paddling a canoe. The depressions are said to represent canoes. I believe this is the recognized form but I have also seen an oblong figure with two outlines of unmistakable canoes. *Chinyanu* is usually found near *nakumpumi*.

Chiuta, when represented, stands beyond *nkunda*. It consists of two trenches at right angles forming a cross, which are covered over with logs and earth and the whole outlined with flour in a decorative pattern. The end of one limb of the cross is left open and round this opening a screen of grass is made. As the wali approach *Chiuta*, some of the assistants or *akamai* descend into the trenches for the ceremony. The *m'mishile* takes up his stand at the centre of the cross and sings:

"*Chiuta, amai, kwilola chiuta!*"
"*Chiuta, mother, come see chiuta!*"

881 Then as everyone says "Listen, listen!" crying is heard "coming out of the bowels of the
778 earth," followed by drumming and the singing of the *chindimba* songs (sometimes *nkunda* or *nsanka*); a horn is sometimes heard as well as *kululula*, trilling with the tongue against
[775] the lips. *Chiuta* is called "the resting place of all departed spirits" and the sounds are said to be the echoes of their doings. The word is not met with elsewhere among the Yao, although it occurs in the Chinyanja and in other languages of this country with the meaning "the heavens."

Chiwuta is said by Hetherwick[1] to be "a large fish that forms one of the pictures at the *Unyago*," but I have never seen it or heard of it, and I am doubtful of the correctness of the statement.

778 *Ching'undang'undu*: Dr. Davey's photograph[2] is an excellent reproduction of this figure, which consists of a mound of earth flattened on the top, and decorated with geometric
[531] patterns in flour which extend to the ground. In the centre and at the four corners, so to speak, are implanted billets of wood with decorative lines and dots in black and red on the white wood (Pl. X, figs. 1, 2). The billets are three inches in diameter and project twelve to fifteen inches above the ground.

[1] *Handbook of the Yao language*, op. cit., p. 141. [2] Op. cit., Pl. III, fig. 2.

[88] The evening of the first day is called *lyuwa lya makunowi*, or "the day of singing," as singing is kept up far into the night, but the exact significance of the word *likunowi* I have been unable to find out.

[515] The second day is spoken of as *lyuwa lya mamaza*, "the day of washing of hands," (*kumaza*, "to wash the hands") when the *wali* are specially instructed as to the necessities of washing hands before preparing food, etc.; precept is followed by practice. The night is spent quietly; for this day's proceedings few people probably will have remained.

On the third day, however, they come back again from their villages in crowds to witness the performance of *usuwa*, *lyuwa lya usuwa*, "the day of house moving" (*kusuwa*, "to change one's abode, carrying goods and chattels with one"). A representation is given of an onslaught on a village by enemies and all pretend to run away carrying their worldly goods with them. The part of the attackers is played by a number of women who, armed with guns and having donned belts and powder horns, rush in on the crowd from the bush and make prisoners of all they can catch. The men are put in miniature slave-sticks; women who are seen trying to run off with a child on the back, one round the neck and one on each hip, are driven as prisoners into a group. When all the noise and fun are over, the prisoners are released. This is often followed by a mock trial. Two women dressed up to impersonate chiefs of rival tribes, argue an old, imaginary quarrel, usually pretending that there has been a raid by one party on an ivory caravan going to the coast, with stealing of the ivory, while the other party in revenge has caught and killed some of the people belonging to the first mentioned. The thing may be kept up for an hour with much talking and great zest, all those taking part being women. Finally each party agrees to give compensation for the damage done; each presents the other with bundles of sugar cane, and friendship is reestablished. That night, everyone again rests quietly.

The fourth day is known as *lyuwa lya kusyunga* (*kusyunga*, "to go round about," referring to the dancing which goes on). Dancing takes place during the day and also the ceremony of *Lakwi* to be referred to later. One of the favorite songs sung this day runs as follows:

[533] [534] *"Ndumba'ji mkamba'pniye ontinde mnuma mkungwe'pu, omao! ambacungo ugunjunona!"*
"(Took this) a present don't give me free wait for me little girl, dear me! and we'll have some fun together!"

On the fifth day, return is made to the villages. The girl *wali* attended constantly by their *shamani* then live together for the period of instruction in huts in a special enclosure in the chief's village or in similar enclosures in a number of villages. The *wali* may go out into the village but must go about with bowed head and look no man in the face; they wear bark-cloth called *liwike* and should they meet anyone, they must pull over their faces the [753] kind of hood with which their garments are provided. They may not share food with outsiders. If they did so, the latter would sicken with a disease called *chiumbelu*.

3: Stannus D-5 (ca. 1912) 1922 FT7 Yao FT7

woman guardian shows to her man red and white beads in her hand and tells him that white indicates health while red means sickness, thereby pointing out to him their deep-rooted beliefs in the diseases associated with intercourse or association with women during menstruation. 881 842

Then follows a test of manhood. The women guardians put little pieces of stick (*lukwi* = sticks or firewood) on their heads and sing: [533 539]

"*Ngempe*	*nkwempe*	*lukwi kwa*	*mauku'chumuno liu!*"
"I must give	my wife	(when sick) firewood	of the *mauku* although it gives lots of ashes!"

What is meant is that when his wife is ill, the husband should fetch the firewood even though he does not know which woods give least ash; the *mauku* tree gives many ashes. The little piece of wood a few inches long with a notch in the middle is then handed to the young man by his guardian. He places it on the ground in front of him, kneels down, and with a small axe he attempts to divide the stick at the notch. If he is successful, he is greeted with cheers, clapping, and much rejoicing. By proving his power to hit straight, he has also established his manhood; it is prophesied that he will soon have children. Should he miss through nervousness, shouts of derision welcome him and his guardian shows her disgust with his performance. If he is a young fellow well-liked in his village, he may be allowed to make a second attempt. After this ceremony, each couple bathes each other in their shelters by pouring water over the head and body without removing the clothes, thus making brotherhood. Forever after the man must treat this woman with great respect, must not address her for some time, and then only after making her a small present.

The woman guardian picks up the two pieces of the broken *lukwi* and on the morning before they all leave *Chiputu*, the mother or sister of the young man gives her a string of red or white beads saying, "These are to bind up the bundle of wood." The man's guardian binds up the pieces of wood with the beads and gives it to her man. When they have returned to the village, they go to the young man's wife and he presents them to her. The guardian, however, steps in and slips off the beads which she keeps, while the wife, pleased at her husband's success, drops the two pieces of wood into the fire.

During the weeks that the girl *usili* remain under instruction in the village, those young men who have been *ku-lukwi* sleep in one big enclosure away from their wives and do not cohabit until after the second return from *Chiputu* is made.

Another *ku-lukwi* test sometimes, I believe, introduced into Yao ceremonies but really one practised by the Mpotola people and not proper to the Yao, is as follows: [177]

The guardian lies on the ground, wearing a small loin-cloth, and holding beads in her clenched hands, red in one, white in the other. Her man standing at her feet, bends over her and projects saliva on to her abdomen through a rolled up leaf held between his lips, at the same time choosing one of her hands. If he chooses the hand containing the white beads, he is hailed with delight as a man indeed, but should he choose the hand containing

the other women joining in the refrain. A number of these songs are here given but each *nahanga* has her own favorites which she sings. They are only sung at *Litiwa*. 843 843 533 539

Alitete, kainjani: ahitete kainjani; Chorus *Mbirunjirani.*

Now you are clucking before laying an egg. Be content then, you must not be running about say more: (Chorus) Call her back for me.

Ku-tetera, " to cluck as a hen " comes from *te! te!* the sound of the hen. Another song is:

Atetereje atele te. Chorus *Atetereje.*

You must cluck, cluck, cluck, little mouse.

A set of songs sung by Kuliati are as follows:

1. *Mtwe ngulwala, kumalembe; amasi!*
   I have a headache, surely; oh dear me!
2. *Jagala, jagala, chemwali, kwutuka mwanyama!*
   Startled (like a rabbit), little girl running like a wild animal.
3. *Asungula'wa walapire ulamba!*
   The rabbit they praise for its cleverness!
   Kumkamula ngalakatete kumlemba ilemba!
   He caught (the name of a little bird) and cut his hair in the *ilemba* fashion!
4. *Unaji ndiri jua mtima; ndigonile, Chenjerere apita!*
   I have a good heart; I am contented, Chenjerere has gone!
   Ajigere mahwangwa, amasi achamasi!
   He has taken away all his dancing things, dear me! oh dear me!
5. *Wahwambaga'wala, lawi! nawe atulanjire twalala!*
   Those who are speaking (an exclamation) show us that we may sec!
   Mlasi ngwile mbunga, tatemera, chikata, ngalakwe, wajaja; ngalangalakwe wajaja!
   The bamboo has fallen with the wind, they shivered with fear (an alluvial plain), (a thing which is stuck) (well-drained).

In native songs, full poetical license is indulged in and it is often difficult to give exact translations of them. The first has reference to the woman making a fuss because she feels ill with her pregnancy; this she is not supposed to do. Number 2 refers to the fact that she has a new experience which may cause her to be startled, but she need not fear. In number 3, *ngalakatete* is a bird which has a mark running back on either side of the mid-line of the crown of its head, resembling a method of hair dressing wherein two bands are shaved from front to back parallel to the mid-line. *Chenjerere* (number 4) is the name of a man but this reference is apparently now without point. Number 5 is sung by the *nahanga* when she hears murmurs of others in the crowd starting to sing other songs; she intimates, " Here are we singing, let us hear you others who wanted to sing; you are probably afraid now." In the latter part of this song, words are made use of which have a slang meaning known only to women. *Chikata* is a woman's slang word for the female pudenda; *ngalakwe*, 843 539

for witchcraft were carried out by strangling with a piece of calico at a place appointed for the purpose some miles from the chief's village. 674 696

There was no case against a man who seduced an unbetrothed girl, the latter being considered entirely at fault. 684

After divorce, the children always remained with the mother. The man left his wife after the case, saying, "I will take my spear and some of the goats and chickens, but the children will always know their father." 586

Murder was a question of compensation to the deceased's relatives and was not punished by death. 682

Stealing was a serious offence but many who were found guilty were rather despised than punished. The thief with the stolen goods tied about his body but otherwise stripped naked would be driven through the village and prodded with sticks to the sound of drums and hoots of derision. Most crimes, however, might be punished by exacting compensation. Payment took the form of goods or slaves. In the case of murder, the accused might have to pay several slaves to the deceased's relatives, and in addition, a fine to the chief for spilling blood, consisting perhaps of one slave. The amount of compensation expected was mentioned by the plaintiff in the case. One of the expressions used was, "My compensation must cover an ant hill," meaning enough slaves, standing hand in hand, to surround an ant hill; ant hills in this country are sometimes very big. If a man had no slaves, he would send his relatives or he himself might be forced to become the slave of the plaintiff. There is a saying anent this practice: 685 681

Chitumbili wachitowile nchila wakwe!
The monkey they tied (with) tail his (own). 539

Slaves passed over to a man in payment for crime became free men; they were an addition to the village and might even be adopted in place of a murdered individual. 567

When compensation was made by the defendant to the plaintiff, the latter always returned some part of it as a sign that friendship was again established.

Goods or money received in compensation for murder, i.e. blood money, might not go for the purchase of food or clothing. Detection of a guilty party by means of magic and proof of guilt or otherwise by ordeal poison are dealt with elsewhere.

Bluffing anyone into giving something for nothing, obtaining goods by false pretence, was not considered a crime, as anyone was "fair game." For instance, a party of youths would waylay a man with a load of fish, saying they had been ordered by their headman to commandeer it. If the man parted with his fish, so much the worse for him; if he showed fight, he was respected and friendship made with a give-and-take of fish and snuff. Such bluffing is called *kulya nawo*, "to eat with them." To add to their appearance of *bona fides*, the party might have secretly borrowed some well-known article belonging to their headman. 674

771 784 6. It is believed that signs of guilt are visible in the eye of a murderer; medicine is procured in the hope of getting rid of these signs.

7. The possession of the hair of another person is supposed to give the possessor power over that person, hence a medicine man, when the patient he has been treating is cured, shaves the patient and keeps the hair until payment is made.

[826] 8. A native with light greenish-grey eyes is not to be trusted. He is said to have eyes like a cat and is called *majwijwi;* these eyes are rare among natives.

9. It is unlucky for a child to get into a basket; he may be burned.

10. Should a woman turn the porridge pot upside down, every one who has eaten will become constipated. For the same reason, a woman, after turning out the porridge from the pot, just touches the top of the mass of porridge with the bottom of the pot.

11. A woman will never leave the pounding stick in the grain-mortar. Should she do so, the heavens would fall.

12. When a zebra is killed, a knot is tied in its tail so that eating of the meat shall not cause indigestion.

13. It is unlucky to sit upon a headrest, the *mawile.* The person would surely be bitten by a snake.

[843] 14. If a man commits murder, and his wife is pregnant at the time, she must sleep on the spear used.

15. Children are told that they must not eat at night; that if they are hungry, they must lie quiet and try to go to sleep again. If they don't obey and sit up eating porridge, a long hairy arm will come through the fastened door and beg for some, the voice of the unseen saying:

[539]

> "*Nyao chimkuti'chosi nuaga ni mjasi!*"
> "Give me that which you put to your nose to smell and throw away,"

the repeated movements of the hand to the mouth (nose) and back to the pot being supposed to make the "bogey" think that they are not really eating but merely smelling and throwing away the food.

16. A male should not scrape the porridge off the porridge stick; this is only allowed to the woman. Should a man do so, it is supposed that when he goes hunting, he will hit anything he shoots at, only in the tail.

17. There is a saying that the men and boys may eat little pieces of porridge which fall out of the pot, while cooking, on to the supporting stones and it will give them power to escape unhurt from battle. These fragments are called *nguhupuke,* (from *ku-lupuka* "to escape").

18. Children are instructed to take their food sitting down instead of being in a hurry and standing to take it. They are told that if they do not obey, their porridge will not go into their stomachs but into their legs and swell out their knee-joints.

3: Stanmus D-5 (ca. 1912) 1922 FT7 Yao FT7

771 784 30. If a chameleon is found holding on to the grass at both sides of the path, the path is "closed" and a man will turn back to his home and not proceed on his journey. It would be unlucky to continue.

789 31. Snakes seen in coils are a bad omen.

771 784 32. The slow-worm known as *khumbula mongulu* ("the cutter open of ant hills"), and the scaly anteater, if seen on the path, are of bad import.

33. To knock the toes against a stone on a journey is bad luck; if blood flows from the big toe, it points to good luck.

34. A man knocking the sole of his foot against a stone knows that some one is speaking ill of him.

35. A person whose hands itch knows he will receive a present.

36. Tremor of the circumorbital muscles of the right eye indicates that something good will be seen. When the left eye is affected, the outcome is less sure.

37. The cry of the bird *ngulukulu* (the green turaco), indicates to the hearer that he is about to meet some one, either friend or enemy.

771 784 38. Anyone who kills one of the large stick-insects (*Phasmidae*) known as *chikuse chiwipa*, will always be breaking the cooking pots afterwards.

825 39. The natives believe that the caterpillar of the *Hippotion osiris* moth will jump at the breast. It is called *chiwumbile mawula*, "that which jumps at the breasts," and children seeing it will cover up their nipples with their hands.

40. Of *Linulu*, the Mongoose, there is a saying:

[539] "*Linulu gupuchilangana nihila!*"
"The banded mongooses relieve each other (at) the rascal"

It is said that mongooses assist one another when being hunted. When one is tired, a fresh one runs in so close to the pursuer that he goes after this one and leaves the tired one, and so they keep it up till the pursuer is exhausted.

41. *Chiula*, the frog. Children are told they must never kill a frog, or its spirit will come at night with porridge made of excrement and make them eat it. If a small child playing with a frog kills it by mischance, he will tear off a small piece of his calico cloth and place it by the frog as an offering.

42. *Chindindi* (*Ikhengwe*, Chin.) the weasel. It is said that the weasel hides its body and leaves exposed its anus, so that a chicken seeing it, goes up to peck at it, whereupon the weasel turns round quickly and catches the chicken with its mouth.

43. *Chingwe*, the skunk (from *ku-ngwa*, to go to stool), so named on account of its odor, is said to apply the anus to a rat-hole and make wind. This will render insensible all the rats in the burrow and he can then dig them out at leisure.

44. *Mikuli*, the honey badger, when hunted is always said to attack a man by attempting to seize the testicles. Natives when they hunt this animal, tie stones in their loin cloths so that they hang down between the legs to defeat the badger.

3: Stanmus D-5 (ca. 1912) 1922 FT7 Yao FT7

 771 784 826 539

48. A child, when one of its milk teeth drops out, stands some five yards away facing the door of the hut and throws the tooth over the roof of the hut, saying:

"Al likungulu line lyanu alyo, mbani lyangu lyambone 'lya!"
"Oh! crow tooth your there is, give me my of good one!"

Religion. The matter of the religious beliefs professed by natives of East Central Africa is one beset with many difficulties to the student of today. It has been the subject of many essays by workers in the missionary field, but the wide contact of the natives of Nyasaland with missionary effort during the past thirty years has done much to confuse the problem, and one feels that many missionaries in their writings rather color the picture with their own feelings. 771

I think probably the Yao with whom I am now concerned have a truer conception of their own beliefs than many of the subject tribes among whom mission teaching has more easily taken root. The religious beliefs of a people are to a large extent the reflection of the circumstances under which that people lives. The outstanding event to all natives is death. At death, something is lost to the body, without which life is impossible. This is the *maimu* which may be translated "soul" or "spirit." The *maimu* is said to leave the body of the dying man when he becomes moribund or unconscious. It appears that this same *maimu* may leave the body during unconscious states unassociated with death, as when a man faints, in epilepsy, and during sleep. 771 761 774

Apart from this evidence of the dissociation of the *maimu* from the living body, the Yao believe that a man's shadow is an objective manifestation of the soul and they will say "the shadow is the *maimu*." Fear is experienced if a man jumps on the shadow of his fellow. Light is also thrown on the constitution of the *maimu* by the belief in a certain evil-spirit which dwells in deep pools. It is called *chimala-mesi*, which means "one who may finish (drink up) all the water." The superstition regarding this evil spirit is that it can suck the blood from your shadow as you stand at the edge of the pool, till you become so weak that you fall in and are drowned. 774 774 776

After leaving the body at death, the *maimu* goes to take up its place in the spirit-world, occupying a position corresponding to that held by the man during his life. With a truly materialistic conception, the soul is supposed to have all the attributes of the dead man, to be wealthy in proportion as the man was so on earth, and its relative position will be identical with that which he held among the living. The tribal chief becomes a paramount chief in the spirit world, the lesser chief holds sway in his lesser capacity, etc. We shall see that in intercession, when the tribe is threatened with calamities, it is the late paramount chief who is appealed to for help, and when one feudal chief is at war with another, the chief's dead predecessor will be called upon for aid. When a village is moved, it is from the spirit of the dead headman of the village that success in the enterprise is sought. Similarly, in family trouble, some dead ancestor is entreated to set things right, while a native 775

769 A man leaving his village on some expedition and wishing to be assured of safe conduct
484 will procure some millet flour. Going quietly into his house, he squats down in one corner
787 and gently sifts the flour through his hand so that it falls on the floor in the form of a little cone, repeating as he does so, his prayer for safe conduct beginning and ending with the word *chonde!* please!

[539] *"Chonde! chonde! wo-ku-mulungu ambuje malanguzye maso gangu nilisons*
"Please, please! those at above ancestor clear eyes mine that I may see
litola, ngaicha 'chenene kungaja, chonde! chonde! chooooonde!"
the path, may I arrive well where I go, please, please, please!"

He then covers the cone of flour with a basket. On the morrow, he will uncover it to see what has happened. According as the cone has remained intact or has fallen to one side or the other, the omen indicates whether or not the journey should be undertaken, the reaction being caused by the spirits to whom his supplication was addressed.

769 Again, there may have occurred much sickness in a village and the people conclude that the post has come to remind them that they have not been attentive to their deceased chief. "His grave-house in the village has been allowed to fall into decay," and so on. They will decide that his spirit must be propitiated. The grave-house is rebuilt, a pot is sunk in the ground, and beer is poured in, and round about heaps of flour are placed. Prayer is made to the chief at whose grave they are worshipping, supplicating him in person and "all others who are with you at *Mlungu*," asking that he will no longer cause ill to befall the village.

When a village is moved, the beer-pot from the grave of the old chief is taken to the new village and a ceremony similar to that just described takes place, with the prayer that he will come to the new village and continue to exercise his benevolent care over its people.

731 In 1880 when there was a threatened famine on account of long drought in Zomba dis-
769 trict, Malemya decided that supplication for rain must be made to the spirits of his illustrious predecessors. Kasonga, one of Malemya's wise men, acted as high priest. A large amount of beer was brewed and the night before the ceremony, twenty sheep and fifty goats were slaughtered. Plates of the meat, of rice and porridge were then placed on the ground round the grave-house of the old Malemya, and pots of beer set into the ground at intervals. At the head of the grave, little heaps of *mbepesi* flour were arranged. This flour had been prepared by such of Malemya's wives as were not near a menstrual period. The following morning, a fence was built round the grave, outside which all the people collected, while beyond them again was a second fence. Kasonga, accompanied by an assistant then appeared, and amid absolute silence entered the inner enclosure. He addressed to the old Malemya, at whose grave they were all assembled, a prayer for rain. He then repeated the prayer, invoking the aid of all the past line of chiefs down to the reigning Malemya, re-
[516] peating their names. Returning to the outer enclosure, he again uttered the prayers, all the assembled multitude repeating them after him while lying face down, resting on their

3: Stannus D-5 (ca. 1912) 1922 FT7 Yao FT7

Luumbe Mtanga is the prophet of famine, a man of great height who stalks the round of the country, stepping from hill-top to hill-top along "the fairy way," the "*Mhira wa Luumbe Mtanga*," which is supposed to run right around Nyasaland and never to cross a river, starting and ending somewhere near the junction of the Shiré with the Zambesi river. As he goes, he can be seen from a hundred miles away. He carries the *kalimba* instrument and plays as he walks, singing: 776

"*Kuliva naye imuyuyu kutipa sonje matendere namisha sala!*" [539]
"You cry out (in trouble) with the midges therefore I must call up the wasps, this season of famine!"

which might be rendered, "You people grumble about small troubles, so I will teach you to know better by inflicting great ones." When he is seen, there will be famine.

It will be convenient here to allude briefly to some of the beliefs connected with meteorological phenomena, as some of them have a bearing on native religious beliefs. The remarks made under this heading for the Anyanja hold good for the Yao. The morning and evening stars are called *Nanteleka* and *Nanapalaya*, the good cook and the bad cook. They are looked upon as the two wives of the moon, one of whom feeds him so well that he grows fat, the other who does not, so he wastes away. The constellation of the Pleiades is called *Jhinula;* the Milky Way, *Lichinga usiku*, "the watcher of the night," when high in the heavens, dawn is near. When shooting stars are seen, natives exclaim "*mapala ubujal*" *Mapala* is a many-pointed arrow. Eclipses are recognised but no explanation is vouchsafed. Thunder is supposed to be the noise of rain falling in the heavens before it reaches the earth. The rain is sometimes supposed to be the condensing steam from an enormous pot of water boiling over a furnace fire in heaven. The lightning is conceived as a lizard-like animal which dwells in the clouds and darts out from behind them and comes to earth and breaks up trees and may kill a man. Mica is supposed by the Yao to be its excrement. The animal is called *Njasi*, and is the same as *Mpamba* of the Achipeta who consider the mica to be the broken egg-shell of the lightning dragons' eggs. There is a large red compound lily, a species of *Haemanthus* also called *Njasi*, which is in some way connected with the lightning. No Yao child would ever touch this flower. Children are always advised never to seek shelter under a big tree but always to make for a bamboo thicket, for if the lightning strikes the bamboo and splits it, it will get caught inside the hollow stem. 821 [824]

Gales of wind are said to emanate from a plant called *Changula*. It is described as having one process like an elephant's trunk and others like two fingers. It is found on the tops of very high mountains, growing alone and surrounded by bare rock. This plant is used by medicine men to gain supernatural powers. *Changula* is also the name of a parasitic plant on the charcoal trees in Nyasaland. [824]

The world is taken by the natives as they find it; to them no explanation for its being is necessary. So far as I can find out, there is no idea among the Yao of a Creator. The 776 773

3: Stannus D-5 (ca. 1912) 1922 FT7 Yao FT7

776 origin of mankind is explained in a story given elsewhere; *M'ulungu* takes no part, nor is
773 the supernatural even invoked in explanation.

The religion of the Yao may then be summed up as ancestor worship plus an ill-defined,
791 uncertain belief in a supreme being. Their religion is not animistic. There are certain spirits of evil, demons, fairies and supernatural beings and animals which, however, do not play any *real* part in their religious beliefs.

● 539 **Native Sayings.** Natives are very fond of sayings, many of which are of the same nature as our own proverbs. The meaning of many of them is, however, not always self-evident but depends on some little story with a moral.

The following are some of those which I have collected among the Yao near Zomba:

1. *Akwanile lihambale!* (or *lipuku!*)
   He caught a fish, (a mouse!)

An expression meaning "He slipped down." The variations being used when wet or when dry under foot.

2. *Ulamba uli m'mesi!*
   Cunning is in the eyes (evident).

An expression meaning "Look out; some one is after us!"

Kabulu chanjewa!
Rabbit be clever!

This is a Mang'anja equivalent to the above.

3. *Chanpupikana unchitelechele mwipanda!*
   A thing that did not listen they cooked in among the herbs!

An insect which had not listened to advice about the dangers of sitting on herbs used as vegetables, was gathered up by a woman and cooked with them.
An expression used with the sense "If you do not take advice and anything happens to you, it will be your own fault."

4. *Mtele uli m'mapikanile!*
   Medicine is in the ears!

Meaning "You are forewarned; it is your own look out!"

5. *Nanpalamuche unnichele chikalakasi!*
   Mr Would-Be-Clever they left with the skull!

Ku-halamuka, to be clever (to show off); an expression made to a newcomer who unbidden joins in a discussion. It has reference to the following story and means that anyone joining a party unbidden may find himself in an awkward situation. Some strangers came to a village, and after being given food and quarters, all retired for the night. One of them, however, Mr. Would-Be-Clever, hearing something going on outside crept out of the house to find out what was happening. Seeing some people playing at catch-ball, he

3:Stanmus D-5 (ca. 1912) 1922 FT7 Yao FT7

joined in the game, unasked. Next moment, the ball came in his direction and catching it in the moonlight, he suddenly found himself grasping a bleached human skull, while everyone else had vanished. There he had to stand frightened as he was till the morning, when he was found in this ridiculous predicament. 539

6. *Tungawe untiziye majani gapyuu!*
   Mr. If-We-Were-You let escape the baboons of the owner (himself).

Ninguwe, meaning "if I were you" is also used.

This expression signifies "A man cannot serve two masters" or "He who tries to please everybody will please none," as is explained in the following story: Mr. Tungawe and another man had their gardens adjacent to one another but the latter's was next to the forest and the baboons used to come and ravage his crops. He therefore consulted a medicine man who gave him medicine to put all over the garden, which would cause all the baboons who came to the garden to die. "But," said the medicine man, "you must promise to bring me the *Mtulya!*" (the little baboon which acts as sentinel and guide). The man did as he was told with the medicine and in the morning found all the baboons dead in the garden; so picking up the body of the *Mtulya*, he was just going off with it to the medicine man, when Mr. Tungawe in the next garden who had been a witness of the good wrought by the medicine, said, "If I were you I should not take the little *Mtulya*, but the biggest baboon to give to the medicine man," so after hesitating, he picked up the biggest baboon to take instead of the little one. Immediately, it and its fellows came to life again and ran away into the forest!

7. *Mkalaga wo wanile wanache ujusi!*
   While they delayed, the children singed the serval cat!

This expression has the meaning, "If you do not do a thing at once, you may be too late!" and has reference to another story. Some youths out hunting killed an animal which they did not recognize, so one of them went back to the village where he found the old men all chatting and told them they had killed an animal they did not know. The old men said, "We will come and see it", but they went on chatting until a second message came. Still they said, "Yes, we are just coming," but they did not go; so the boys not knowing any better, instead of removing the skin, which is of value, with the hair on, singed all the hair off which was their custom with some animals, so that eventually, when the old men arrived they found they had lost a valuable skin. Another saying with the same meaning is: *Mkalaga wamdakala wanache pa upuu*, "By delaying she gave birth to a child on the mat."

8. *Angalala lipuu wamkumukala!*
   (He who said), "I look at the sun", he went astray! [Cf. Johnny-head-in-the-air.]
   Che ngunuga wanche ku nsui!
   Mr. The-One-Who-Asks arrived at the village!

●531 An expression intimating that a man who is cockeye about doing a thing may come to grief, whereas the man who takes the trouble to get information gains his object.

9. *M'lomi mwangalangala mwiwa!*
In the moonlight you cannot cut out a thorn!

A free English translation of this saying would be, "There is a proper time for doing everything." It involves the implication that doing a thing at the wrong time may result in evil.

10. *Apakanwa wawlaqa ambaja wwa!*
Mr Mouth hurt master him!

An expression intimating that careless speech may bring a man into trouble: the mouth is looked upon as the slave of the body. The expression has reference to a story which points a moral against smoking hemp. There was once upon a time a big chief who had a headman (Apakanwa) to whom he entrusted all his messages. One day, the chief brewed beer for hoeing and the big drum was beaten to call all the people together, and thus, the chief leading, they all went to the gardens, but the headman who used to smoke hemp lingered behind and in coming later, while crossing an open glade between the village and the gardens, he saw a human skull beside the path. Half intoxicated with the hemp, he kicked it, saying "Who killed you?" The skull answered, "Apakanwa!" The man was frightened and so kicked it again; then going off to the chief, he related what had happened. The chief and all the people returned with the headman to the place where the skull was and the headman, kicking the skull, asked again who had killed him, but no answer came, and so with a second interrogation. Then the chief had the headman bound and said, "What you say cannot be trusted. You waste our time with your untruths," and he had him killed.

11. *Kolo halasi ugwaiaqa hawuba!*
Having baldness you must not hide the razor!

An expression meaning "If you have no further use for a thing yourself, do not throw it away; it may be useful to others!"

12. *Lolo lolo ulawuba uwpilili!*
Today today the ulawuba was blackened!

A saying meaning "he who hurries will not do best!" *Lolo*, today; *lololo* here has the meaning "in a hurry." *Mlawuba* is the name of a small jet black bird. The story goes that when all the birds were being painted, the ulawuba bird was very impatient and coming up to the painter, said, "I must be done today; I am in a hurry." The painter said it would take longer but acting on ulawuba's persistent cries to be done quickly, he just took up a brush and painted him black all over. The following is sometimes added:

Kwambalaqa uwuda uwpulila uwuda (or dwuda)!
Being patient the uwuda bird came by spots (or marks on its head).

539

13. *Chambuge, wakila ngunga mkisi!*
Chambuge, they ate guinea-fowl raw!

An expression depending for its meaning on the story given below, used by a husband to his wife or by one woman to another, intimating that the woman has delegated her work to some one else and is not looking after things properly. A man killed a guinea-fowl and gave it to his wife to cook. She, however, gave it to her servant, Chambuge, to cook in the house while she sat doing nothing on the veranda, calling from time to time to know whether it was cooking well, to which always came answer in the affirmative, "eh." When the meal of porridge was ready in the evening, and she went to get the guinea-fowl from the pot in the kitchen, she found that it lay in the pot in cold water as her servant had only put one handful of grass to make the fire under the pot and then left it.

14. *Ku-w'mahika nungula akwangwa!*
By holding a torch shift (to see if the hare was asleep) before it had lain down!

An expression used to a man who by precipitate action without due caution loses that which he seeks to gain as in the following case: If a man seeks a girl in marriage whom he wants to take to live with him far away in his own village, instead of himself settling in her village according to custom, he must not let this be known or he would be refused.

15. *Wakwinga nikha!*
(Your wife) she is showing the porridge stick!

An expression used to a man who is homesick.

16. *Mwa wa kakombola!*
(He has or you have) the perseverance of a mitar!

An expression used to anyone who keeps on asking for something and is a nuisance.

17. *Mbepani kapakalaga ku mwa ni ku ndunga kwakwa!*
The flour (ought) to be painted on the forehead and on the back of the head also!

Mbepani is the offering of millet flour to the departed spirits, or as here, the sacrificial flour used by the chief to smear the front and back of the head of each boy at the end of the initiation ceremonies. The meaning of the expression is that "one should not only look forward to the good things of the future but also remember all the help that has been given one in the past." [769]

18. *Mbwajingle wam'wamile wapumbe pa tukwi!*
He who comes and goes and comes again they shot him with an arrow in the buttocks!

Of which the sense is "a man may do wrong once but if he continues to do so, he will suffer for it."

19. *Lipakwa kpamikile ukuhi!*
The pig was made a scapegoat (on account of) the gleanings!

A pig who was found picking up the remnants of a crop in a field which had been reaped, was thought to be the thief and killed.

●539 30. *Wandile pilanga ukusi!*
He was "let in" badly over the fish-sticks!

A man had put a lot of fish on spits to roast round the fire. While he went to get some more firewood, a thief came and took all the fish. A stranger then approached and was examining one of the sticks, saying, "There must have been a very nice fat fish on this stick," when the owner returned and immediately accused the innocent stranger of stealing his fish. A native coming across a corpse will run away, using the above expression, for if he reports the matter, he may be the first to be accused.

31. *Sompolo we wolohlolo (wamusuka) wa ewila!*
The impotent man had been to him a child in a joke!

[842 558] A native man who is impotent is very much looked down on and he is the laughing stock of the village. He is constantly made fun of by the women. The story goes that such a man when being chaffed, said, "All right, let me have the prettiest girl in the village," and they said, "All right, old sompolo, you can do her no harm." But it came to pass that she became pregnant and the women were disgraced. The meaning of the expression is: what is done as a joke may become a reality.

32. *Mawo winji ng'ombe ayo ngawa ewondi!*
Days many, hairs of an animal few!

There are more days than there are hairs in an animal's coat! If A has done a good turn to B, and B behaves badly to A, A will remonstrate, using the above expression, meaning, "You may want my help again some day, but I shall then refuse and you will suffer."

33. *Chilondo changilinge mukowo!*
The (country) earth cannot (be) measured in cubits!

Meaning, "You never know when you may want return for your good deeds.

34. *Kumenda kwalinga, kwanda kulijwingi! or kupanga pa mata!*
To be generous (is) to save up, to be stingy (is) to deep consell! or to throw in the fire!

Kinhawa returns to the door.

35. *Uwili ukwa, ujiko wangalikwanda kungawa!*
Two-arms (is) good, because he cannot rub the back!

Ku-kwanda = to rub the back of another person while bathing, a thing a native appreciates very much. An expression often used with the meaning, "There is safety in numbers," (*uwiji ukwa!*)

36. *Kulapapa ukwatikkwanikile!*
Being in a state of poverty, one must not hang (oneself)!

Ku-lapa = to be poor, to be in trouble. Do not give up hope.

37. *Kwinkilinga kujangalile kwinanga!*
Having become rich one must jump for joy in the dark corner of the house.

Meaning "Though you are prosperous at the moment, do not make a show; all these things may pass away quickly," or *Kwishila ulwanyipwishile pwani!* "One should not rejoice speedily."

30. *Wabile wamala pa mtwi!*
They have eaten wamala fruit on the head!

The intimate of a household who betrays the friendship of the husband by culpable intimacy with his wife is said "to eat wamala fruit with the wife over the head of the husband." (Cf. French, *faire cornes.*)

31. *Ilyamba na kwikala nangalawa kwikala n'mwa!*
The arrow he is watching, it does not take long to reach the eye!

A man who looks on and does not take steps to stop an ill at the beginning will suffer heavily in the end.

32. *Wamangamwiya kyenyu!*
You kept me holding a stone!

You are late in your appointment; you have kept me waiting.

33. *Likala pilikamala mkuyi (na ukwikamala) likalimba!*
The jackal when he swallows mkuyi fruit is swollen; (i.e. a jackal knows he can void the seeds of this fruit).

Likalimba has the sense of when jumping over a stream, the jumper is sure of landing on the opposite bank. The expression used of a man means that he feels pretty sure to get through with what he is doing. (Note: Some in contradistinction to jackals are said to eat wamala but always to expel the seeds from the mouth, as the seeds are sharp-pointed and very irritating. I have myself seen a man die from perforation of the bowel by these seeds.)

34. *(Ukwenti) mpanda mpanda wakilikuyi!*
(He has) measuring measuring of the bat!

Reference is made here to the habits of the bat which often makes a meal of figs and then flying to other trees, leaves its droppings under them also so that one might take them to be fig trees, too. The saying refers to a man who manages to involve a lot of others in his own trouble.

35. *Mapanza akalaya ngi!*
The mouth-weapons they (people) admire (his) footprints!

The *mapanza* is a small rodent whose footprints may be seen all over the gardens in the morning, but seldom the animal itself. The meaning of the saying is, "If you are going to steal, it does not matter if you leave your footprints, but do not hang about and get caught!"

36. *Kilinda ukwanza wamalukala wamwika!*
Mr I-Must-Do-Well they on him hanged the wamala!

● 535 Well-meaning people often get into trouble! This refers to a story of a man who had a great friend in another village who died. Hearing he was dead, he went to the village and found all the relatives mourning the dead man. To show his friendship, he commenced wailing and went into the house and lay down by the corpse among the chief mourners, though not one of them; later, he fell asleep. While asleep, evil spirits (*mwoni*) came and set upon the corpse and removing the liver, they took out the entrails and hung them about the sleeping man's neck, and smeared his hands with blood. In the morning, the mourners found the man in this condition and to avenge what they supposed to be his desecration of their dead, they killed him. The interpretation put upon this story and the meaning of the saying is that " however well intentioned you may be, you should not transgress customs."

36. *Kpobo* *ja chikwale* *ulwa chikwal!*
The foot of *strangeness* long tail!

A newcomer in the fowl-yard is pecked at by the other fowls and if it had a long tail, this would be noticed. In the same way, " If you are a stranger in a place, anything you do will be remarked; therefore your conduct should be exemplary."

38. *Ntumbuka* *mwaja* *ja* *Chikolo!*
Do not *scorn* me with the *contempt of Chikolo!*

This is a woman's saying, meaning, " I don't want to be dragged into your quarrel! " Chikolo is an interesting word. It is a girl's name used as Polly is used in English in speaking to any girl child whose name you do not know: " Come here, Polly, and show me the parent's house." For Tomony used in the same way, the Yao says *Mwanyaya*.

37. *Nakowa* *ahapinda* *ansoni!*
The beer basket he deals in a neighbour!

Nakowa is a small flat basket with ornamental rim. The meaning of the phrase is: " man's neighbours are not always disinterested."

38. *Ajinolo* *wandowola!*
He has stolen eggs!

This is an expression used of anyone who has blunder. It is said that he is so surprised at being thus accused that the blunder stops.

39. *Awanki,* *ukhwangwaga* *apile* *ukwali* *ku nyumba!*
You girl, (with) expectation he burst blundering to the back!

In a native house, the man and woman lie side by side on a mat between the fire and bed wall, the man next the fire, facing it when sleeping. When he wishes to enjoy marital relations, he turns towards the woman and lies on his side with his back to the fire. The saying refers to the unwelcome husband whose advances are refused by his wife, but he persists until his back is blistered by the heat of the fire. The saying intimates that it is no good going on wanting a thing refused you; you only suffer for it.

40. *Gwere kwale ndabuta!*
Lying on the rock, heat!

This is a slang expression which in full would read, "It is nice and warm lying on a rock in the sun, but it is not so comfortable as being in bed in company with your wife; you can go on waiting but you won't get anything." This might even be said to a dog, watching as a dog will, every morsel of food lifted to its master's mouth.

41. *Kalupilile mani pa mkina!*
To have hopes of water for maggots!

It is a custom before lying down to sleep on the floor mat, to take it up and pour boiling water on the earth floor to kill any blood-sucking maggots (Congo flour-maggot, *Anobium*[1]). If you see a pot cooking on the fire, you naturally think there is food being prepared but you may be disappointed; it may only be the pot for heating the water to kill the maggots. The saying is thus used to a man who has made an assignation and is disappointed but goes on waiting.

42. *Kuluma upwi!*
To bite cockroach-like!

The cockroach is described by natives as going up to what it will eat, remaining quiet for some moments, and then suddenly taking a bite. This is said of a man who comes up to you smiling and then hits you a hard blow.

Among the Yao as among other tribes that I have previously mentioned,[1] signs of salutation to a superior are made by clapping the hands or patting the breast or buttock with one hand, at the same time crouching down. A woman will go off the path and kneel, looking away from a superior passing along the roadway.

A person going by the door of a hut where others are sitting, will say "*Kwimapa kwao!* At the door here." Passing behind anyone, he will say "*Ku-upa 'nsa!* At the back!" Meeting anyone on a path, a man will simply say, "*Ichu*, here," adding perhaps, "*Ku-chalo!* all is well!" A chief or headman on returning to his village after a journey, is greeted by the women with trilling of the tongue (*Ku-lulula*).

Man and wife do not greet each other in the morning. The wife rises first and draws water and places it in the hut for the husband's use but nothing may be said.

When a visitor is entertained and a chicken cooked for a repast, the "pope's nose" is always for the visitor. The right hand only is used in dipping into the common pot. A man of small importance, though replete, will go on making pretence of eating at a common meal by taking very small amounts so that his superior shall finish first, and rise and go away before him.

I may here add the words used by the Yao for the sounds made by various animals; they are interesting to compare with those of other languages:

[1] 'Notes on some tribes of British Central Africa,' op. cit., p. [illegible].

H2

The dog.....*ene ene!* (as in bed).
The cat.....*ngwa!*
The cock.....*kokokiko!*
The hen.....*ko ko ko!*
The duck.....*kwa kwa kwa!*
The cow.....*ewe!*
The sheep.....*ko!* (as in hoko).
The goat.....*ewe!*
The dove.....*ene ene!*
The fowl.....*ng'wwang'a!*

H5 578 Among the Tao, clown and obscene language are rare; expressions which appear in other languages all the world over are only used on great provocation and commonly with dire results. This, too, is opposed to the ways of neighboring tribes, the Anyanja and Angoni, who freely make use of such expressions as "*Ngini ga wuka!*" and "*Ekuwa wa wuka!*" "The pudends of your mother! Clitoris of your mother!"

The following exclamations of abuse and expressions of obscenity will be seen to follow very closely upon those in other countries.

1. *Mwanakwa!* (to a girl or woman), *mkolola!* (to a boy or man) means you are a person who has not been to your Dzungu, and therefore "you are without manners!"

2. *Mwana mkungwa!* an expression to a child meaning "you little wretch," "you nasty little thing!"

3. *Ahubile kwa ligwa!* he wets with the back of his hand, he is uncircumcised, i.e. "he is a dirty person!"

4. A man with big ears is hailed "look at your ears like a lemur!" (*Likondo*, a lemur).

A Tao woman seldom, or never swears at or uses bad language to a man nor the contrary; the woman, however, is not behindhand in the art of bitter complaining and nagging.

[L 28] Pulling down the lower eyelid with the finger accompanying some exclamation has exactly the same significance as in European countries, "I am not as green as I look!"

Ku-ewpa is to make a sound like "*pish!*" with the mouth, and is a great insult, for which a man will fight.

Smacking of the lips to one side as in the action to get rid of the sour skin of a fruit, *ku-mwa 'p'wupa* is an expression of contemptuous disgust.

GH5 539 The similarity to European ways is again seen in swearing or taking oath. A Tao swears by the spirits of his ancestors or by a chief:

"*Christ cha Mdungu!*"
"(By) the graves of *Mdungu!*"

or he may indirectly name some ancestor:

"*Kyakwikila kyangu!*" or "*Kyakwikila kwakwa!*"
"I swear by the spear!" "I swear by the foot!"

3:Stanton D-5 (ca. 1912) 1922 FT7 Tao FT7

GAS 539

meaning I swear by the spirits of him who was killed with a spear (or by a lion), referring to some one well known to have in such wise met his end, or again:

"*Ngubombile kwenda kwa wendu!*"
"I swear by the finish of (all) men!"

an equivalent to swearing by the day of judgment; or again a man may swear by his own death:

"*Lifuko kwapitile n'mapikwendu!*"
"Death may it enter (my) nest!"

or he will intimate that his throat should be cut by drawing his finger across the neck, if he does not speak the truth.

There is a gibe around Zomba in swearing. A man saying, "I swear so and so," is asked, "By whose grave-house? *M'nali wa ziwa?*" The man who is in reality only bluffing will say, "Chokoma! By Chokoma's grave!" Chokoma a small headman near Zomba of whom much fun is made.

Native stories. The fables or stories found among the Zombe Yao are many of them variations of well known tales, and have been collected to some extent by others. I only propose to add here few translations of a few I do not remember to have read elsewhere.

539

The Hare and the Elephant

The elephant made a big garden and planted sugar-cane. When it had grown, he asked all the other animals to come and partake of it with him. When they had all assembled, the buffalo, the eland, and all the other antelopes, the zebra and all the smaller animals, the elephant invited them to eat. He made one condition, however, anyone who, having chewed the sugar-cane, made a sucking sound as he swallowed the juice before spitting out the fibrous part would be killed (*Iwejenje*, Chin. *Iwgwenda*, to suck, making the sound "ashiash").

So the animals all sat in a long line and the buffalo started chewing his piece of sugar-cane, but when he tried to get all the juice out of his piece, he went "ashiash!" so the elephant twisted his head till he was dead, and then picking him up, threw the carcass aside. The same fate followed for the eland, for all the antelopes and the lion, so that the other animals became afraid and would not volunteer to eat the sugar-cane but went away and the carcasses of the dead animals were buried. The elephant then appointed another day and invited the animals to come again and try.

That day, the hare came and made salutation by clapping to the elephant who demanded what he wanted, so the hare replied, "I have come to eat sugar-cane." "You know my rule," said the elephant. "Yes," said the hare, "I know *your* rule but I want some sugar-cane." So he was given some while all the other animals looked on to see what would happen. "Please," said the hare to the elephant, "may I have the outside part stripped

3:Stanzas D-5 (ca. 1912) 1922 FT7 Tao FT7

539

off, so I have not got strong teeth?" This was done for him and he started munching some pieces of sugar-cane as he sat on a stone with the rest of the cane beside him, while the elephant watched. "Did you kill the buffalo just for saying 'ehkeh'?" said the hare, as he sucked the juice from the fibre. "Yes," answered the elephant. The hare pondered awhile as he chewed up some more cane. "Did you kill the eland for saying 'ehkeh'?" again asked the hare. "Yes," answered the elephant, as the hare each time spat out the sucked-dry fibre. With each mouthful the hare asked about another animal until he had finished all his sugar-cane.

Then the elephant, seeing that the hare had finished and had not cane made a sucking noise as he swallowed the juice, said, "You are a wonderful animal" and he gave him half his garden and they have been friends ever since.

This is one of the many stories illustrating the hare's supposed cleverness and cunning.

The Hawk and the Cock

How the birds of prey came to escape the fowls

At one time, all the eagles and hawks used to be afraid of fowls. The cock inspired them with awe; they thought with his crest of red horns, he must be very dangerous. One day after talking it over, they decided to send their little brother, the Kaiotola (the smallest of the hawks) to investigate matters. So Kaiotola flew down to the earth as an ambassador of peace to interview the cock who was strutting about with his family. He explained to the cock that the eagle, Kapungu, their king, wished to be on friendly terms with the cock but that they were afraid of his crown of red horns. The cock answered that it was not made of horn but was quite soft; "Come and feel it," said he, "it is nothing to be afraid of." Kaiotola was frightened, but when the cock repeated the invitation, Kaiotola did so. He was surprised to find it soft and evidently nothing to be afraid of. The cock accepted the eagle's message of friendliness, so Kaiotola said good-bye and prepared to fly away. Just then, he spied one of the cock's daughters and no longer being afraid, he darted down and picked her up and bore her away to the presence of the eagle to whom he related how the cock was nobody to be frightened of, saying, "See here, I have carried off one of his daughters." So all the eagles and hawks saw that the fowls and their cock were a weak tribe and they could easily make war on them and carry off their children.

The Pig and the Baboon

How once friends, they parted, the baboon staying on the tops of the hills, the pig going down into the plains

Long ago, the pig and the baboon used to live together on the hill-sides. One day, it was very cold and a cutting wind was blowing. As the pig and the baboon sat on a rock in the sun trying to get warm, the baboon turned to the pig and said, "This wind is enough

3:Stanner D-5 (ca. 1912) 1922 FT7 Yao FT7

to wear the end of one's nose to a blunt point." "Yes," answered the pig, "it's really enough to blow the hairs off one's buttocks and leave a bare, dry patch." "Look here," said the baboon getting cross, "you are not to make personal remarks"! "I did nothing of the kind," retorted the pig, "but you were rude to me first." This started a quarrel and they came to the conclusion that neither cared for the other's company. So they parted and the baboon went up on to the rocky top of the hill, while the pig went down to the plains. 539

The Cock and the Crocodile

"Kokokikwi! Cha Kpoma ambuangwi!"
"Cock-a-doodle-do, the crocodile is my friend!"

When the reptiles heard the cock giving voice, one morning, they were much annoyed, saying, "What is the cock that he takes in vain the name of our King!" and they made a case about it, and all the birds and reptiles came to attend the case, and the crocodile and the cock were also present.

After the reptiles had made their charge against the cock, the eagle Kapungu, king of the birds, spoke, saying, "This is a matter of clan relationship. Can the cock claim the crocodile as his ambuangwi? What is the crocodile? What is the cock? We must get to the bottom of the question. Is it not from an egg that each comes?" To which the crocodile answered, "You speak truly but we had never thought of it before; we are friends," and then he swore that inasmuch as men killed his brother the cock, he would kill men, and from that day to this, he is man's enemy.

Note: This is an interesting story with its reference to clan relationship. The native seems to forget, however, that a crocodile will devour fowls along with most other things, including his own brother.

The Tortoise and the Baboon

Why the baboon has no tail

Once upon a time, the tortoise made friends with the eagle and invited him to come and pay a visit. So one day the eagle alighted at the tortoise's home and was there entertained and fed. When leaving, he asked the tortoise to return the call but the tortoise having explained that he could never walk to the eagle's place of abode, it was decided that the eagle should then and there carry him. So the tortoise asked the eagle to wait for a few minutes and he went into his house and got a bag. Into the bag the tortoise crept, asking the eagle to fasten up the bag and tie it to his leg and thus fly with him to his home. Arrived there, the eagle gave his guest fish to eat and the next day when the tortoise wished to leave, he received some fish to take with him. This was put in the bag fastened up with a long piece of string, the other end of which the tortoise tied round his neck. Saying good-

3:Stanmus D-5 (ca. 1912) 1922 FT7 Yao FT7

539 kye to the eagle he asked him to toss him down from the tree so that he could reach the ground and walk home. On reaching the ground, he started off for home with the bag trailing by the string behind him. On the way, he met some baboons, one of whom seeing the bag ran and took it, saying it was his find and belonged to him. The tortoise naturally argued the point and they decided to go to the elephant to have the dispute settled. After hearing the evidence of both sides, the elephant gave his verdict in favor of the baboon. "The baboon had found the bag and therefore it must belong to him. If it had belonged to the tortoise, he would have been carrying it on his shoulders." So the tortoise had to go home without his bag of fish. After a few days, he thought out a plan of revenge. Going to a place where he knew the baboons often met, he dug a hole under a stone and getting into the hole, he lay in wait. Presently the baboons arrived and one came to sit on the stone. Creeping out of his hole, the tortoise laid hold of the baboon's tail, calling out, "I have found a *chikoti* (whip)." The baboon immediately replied that it was his tail. "No," said the tortoise, "I have found it trailing on the ground. Finding is keeping; anyway we will go to the elephant about it." So they went again to the elephant who upheld the tortoise, and ordered the baboon to cut off his tail and so the baboon lost his tail.

The Snake and the Partridge

Once upon a time, there was a partridge who lived in the grass on the plain. One day a bush fire spread towards the place where he was feeding and he decided that he must fly to a place of safety. As he was taking his little run preparing to fly, a snake called to him, saying, "I can find no hole to get into and I am afraid I shall be burnt. Let me coil myself about your neck and you could thus carry me to a spot which is already burnt." The partridge agreed and with the snake wound round his neck, he flew away and alighted on a place over which the fire had already passed. "Now," said he, "would you mind unwinding yourself from my neck?" But the snake answered, "What am I going to eat here in this burnt place?" and tightening his coils, he strangled the partridge.

There is a saying apropos of this story:

"*Ndende*	*'chenene*	*wenkeje*	*enpunde!*"
"I may do	well	killed	partridge!"

and one in Chinyanja:

"*Ubwino*	*unapa*	*nkunde!*"
"Kindness	killed	the partridge!"

Ndende 'chenene and *ubwino* have the meaning "the wish to do a kindness; Misplaced kindness is fraught with danger!"

The Hare, the Leopard, and the Bushbuck

Once upon a time, a man hoed his garden and planted it with beans. When the crop grew, he was much troubled by the animals from the forest which came and damaged his

beans, so he set a snare to catch them by the leg. One day, a leopard came that way and 539
got caught in the trap. After a time as he lay there unable to move, he spied a bushbuck with his mate and four young ones and called to him to come and help him. The bushbuck, when he saw the leopard in the trap, took pity on him and undoing the rope, set him free. Said the leopard, "I have been here three days and am famished. You have been very kind to me. Will you extend your kindness and take me to your home and give me food? I am very much indebted to you, and to show my gratitude, I will remain with you." So the bushbuck assented and led the leopard to his home where beans were cooked and put before the leopard to satisfy his hunger. But the leopard refused them, saying that he did not eat beans. So some fowls were killed and cooked and given to him to eat. Every day he was given fowls to eat until none were left and the same thing happened with the goats. So when there was no more flesh for the leopard's food, they cooked some beans for him. Then the leopard again explained how greatly he was indebted to his benefactor, the bushbuck, and that he would like to show his gratitude by staying with him but that he really could not eat beans and asked the bushbuck to give him one of his children. The bushbuck did not like to refuse, so one of his little ones was killed and given to the leopard who ate him. Next day, the leopard asked for and received another child and so on until all had been sacrificed and only the bushbuck and his wife remained. The leopard demanded the wife and the poor bushbuck, not knowing how to get out of it, had to give the leopard his own wife to be eaten. When the leopard again felt hunger, he said to the bushbuck, "Well, now you have been very kind to me and given me all you have but you still remain. I think I will have to eat you, too." But the bushbuck being now really frightened, made off into the forest chased by the leopard. After running for three days, the bushbuck met a buffalo who asked him, "Why are you running so fast with a leopard running after you?" So the whole story was told and the buffalo's advice asked in the matter, to which he answered, "Well I don't think that you can do anything except continue your kindness and give yourself up to the leopard." But the bushbuck ran on again and meeting the elephant the same question was put to the bushbuck and in answer to the story, he received the same advice as the buffalo had given. So with nearly all the animals of the forest until he met the hare who, after listening to the bushbuck's story, offered to act as judge in the case. So when the leopard came up, the hare told him he would like to see how the whole thing had come about from the moment he got caught in the trap. All then repaired to the place where the snare was. "Now," said the hare setting the trap, "will you just show me how you got caught? Of course if you are trapped, I will free you again." So the leopard stepped on the trap and was immediately caught by the leg. "Ah," said the hare, "that is the way it happened, is it?" with which he went off, taking the bushbuck with him, leaving the leopard now to die of hunger. Later, some one came along and finding the leopard in the snare, killed him.

3: Stanzas D-5 (ca. 1912) 1922 FT7 Yao FT7

The Hare and the Hyaenas

539 Once upon a time, a hare went to seek work with a lion and agreed to attend to the drying of the meat the lion killed. One day, when the lion was away hunting and the hare was busy attending to his work of drying the meat, some hyaenas came by and seeing the meat asked the hare to give them some, but the hare refused, saying it was not his own but belonged to the lion his master. So the hyaenas just went and took and ate of the meat, and made off. This went on every day and the hare becoming much distressed about it, decided to try and trap the hyaenas, so he dug a game-pit and having put pointed stakes in the bottom, he covered it up with grass. In the afternoon, he went out for the daily supply of firewood, and on his return he was dismayed to find that the lion, his master, had fallen into the game-pit and been killed. After this, he abandoned the pit and thought of another idea to defeat the hyaenas and avenge the death of his master. He got the lion out of the pit and carefully removing the skin, he dried it and stuffed it with grass and fixed up the stuffed body in the forest close by, and attaching one end of a rope about its neck, he carried the other end to the place near by, where he went on with his work of drying meat. Presently the hyaenas came along and as usual asked for meat. The hare this day invited them to come and take what they wanted. Pretending to be friendly, the hare remarked how well one of them would look with a nice piece of rope tied round his neck, like a necklace, and the hyaena's vanity being touched, he allowed the hare to fasten the rope round his neck. Now this was the rope to the other end of which was attached the stuffed lion, and when the next moment, the hare called out that the lion was coming back and the hyaenas started to run away, they found that the lion followed them. Wherever they stopped to get breath, there he was still on their tracks, so they decided to run for a hole they knew where they could hide from the lion. After they had been in the hole sometime, one of them peeped out, but there was the lion waiting at the mouth of the hole. Day by day they got more hungry but every time they peeped out, they always saw the lion waiting for them, and so it happened that they grew weaker and weaker and eventually died of starvation.

The Hare, the Elephant, and the Hippopotamus

The hare challenged the elephant to a tug-of-war, the understanding being that if the elephant pulled the hare over, the hare would pay, but that if he did not succeed in pulling the hare over, then the hare should receive the wager. To this the elephant agreed, and away went the hare to the hippopotamus and made a similar proposal to which the hippo in turn assented. On the day appointed for the contest, the hare handed one end of a long rope to the elephant and arranged with him that he, the hare, should signal a blast on a horn when they were to begin pulling, the second blast to be the signal for the end of the contest. The hare then trotted off with the other end of the rope and found the hippo,

3:Stanaus D-5 , (ca. 1912) 1922 FT7 Yao FT7

with whom he made a similar arrangement. Then, taking up a position midway, he blew on the horn and the elephant and the hippo started pulling against each other, each ignorant of his opponent. Neither could pull the other over, for they were both equally strong. So the hare blew a second blast on his horn, and going to the elephant received the acknowledgment of his defeat and the wager, after which he went to the hippo who was also defeated, and so received his second wager. 539

The Story of the Dzimwe

Once upon a time there was a woman and she was with child. One day she wanted some meat to eat and asked the Dzimwe to give her some. The Dzimwe agreed to give her some meat if she would give him her child when it was born. To this the woman assented and received the meat. In due course the child was born but the woman thought no more about the Dzimwe until one day she met him and was reminded of her promise. So the woman arranged with Dzimwe to send her child to the garden to gather pumpkins so that he could catch him. The child's name was Kalikalanje which means "he who frys himself in a pan." The Dzimwe went down to the garden, changed himself into a pumpkin, and waited for the boy's coming. Presently Kalikalanje arrived and looking at the pumpkins, said, "I only gather one that dances," so the Dzimwe in the form of a pumpkin started dancing about and the boy ran away calling out, "No! really I don't gather pumpkins that dance." A few days later, the Dzimwe sought out the woman and related how he had been duped, so the woman proposed to tie the Dzimwe up in a bundle of grass in the forest which she would then send her son out to get. Kalikalanje, sent out by his mother for a bundle of grass, came across the bundle containing the Dzimwe, and remarked that he only took bundles of grass that danced. And when the bundle started dancing, the boy ran away, calling out that he did not really take bundles of grass that danced. So the Dzimwe a second time was frustrated. Again he went to the boy's mother and asked her, saying, "You promised me the child, you must make some other plan to deliver the boy into my hands." This time she hit upon the idea of sending the boy to another village to play *nimpe* (a kind of game of nine-pins), and told Dzimwe that he would be able to recognise her son as she would shave his head and give him a piece of red cloth to wear. So Kalikalanje went to play *nimpe* with the boys in another village, but arriving early, he got them all to shave their heads and tearing up his piece of red cloth, he gave each boy a piece to wear. When the Dzimwe arrived, he was again baffled as he did not know which was the boy he ought to have. Once more he met the woman and explained how her plan had miscarried, so she suggested that she should send her son out hunting in the forest and the Dzimwe could catch him there. So the youth went out hunting and he took his four dogs with him, including his dog, Mawalayenje. As he went through the forest, he suddenly came upon the Dzimwe, so he climbed up a tree. "Ah," said the Dzimwe, "I have got you at last!" and commenced to cut down the tree. Then Kalikalanje called to one of his

3:Stanous D-5 (ca. 1912) 1922 FT7 Yao FT7

539 dogs to attack the Dzimwe and the dog rushed in at him but fell dead, killed by the wind passed from the bowel of the Dzimwe. The same fate fell to two more dogs. Then Kalikalanje called his dog, Mawalanyunje to attack the Dzimwe. Mawalanyunje flew at the Dzimwe, making wind at the same time as his enemy, and was unhurt. He bit and bit at the Dzimwe till he killed him. Then Kalikalanje came down from the tree and got medicine and his three dead dogs were brought to life again, and he was not molested further.

[114] NOTE. This story is only an incomplete form is given by Hind in his *First Yao Reader* and I have therefore thought it worth while repeating it in extenso. Miss Werner[1] has referred to Dzimwe but seems very doubtful of the meaning of the word. It occurs only in the story given above, common to both Wayao and Anyanja, and simply refers to a fabulous personality, one of whose attributes was the ability to change into various forms. Scott in his dictionary,[2] mentions a Chinyanja word, *Dzimwe*, an elephant, so called because of its large belly filled with masses of unchewed food.

NALUMBALAPA, THE NIGHT-JAR

One day when the night-jar was strolling along, he met some guinea-fowls and approaching their leader, he said, "I envy you when I see you going along accompanied by many of your people. I should be very glad if you would help me by giving me medicine to make me also a chief among others." So the guinea-fowl said, "That is all right, but you must come at the proper time when I am at home." In the evening, the night-jar went to the guinea-fowl and the guinea-fowl gave him some medicine and told him, "Take this medicine. You must then get some animals' dung and mix the medicine with a basketful of it. Choose a nice site and sprinkle it all over with this. Then build your own hut there. The rules about this medicine are as follows: If any people come to stay with you and do any damage to your crops, don't abuse them; speak gently." "All right," said the night-jar, and went away to follow out the instructions. When this was all done, one evening some one came and clapping hands at the door, called to the owner. The night-jar went outside and found a man with his wife and children. They had come to settle down with him. (He was going to be a chief among men!) So he told them to come in. After a few minutes, others came, and then all night others arrived until the house was full and others camped outside. Within two days, there was a big village. Then the night-jar went back and reported to the guinea-fowl. The guinea-fowl again bade him keep to the rules. Then the people made a big garden for the night-jar and planted cassava and many other things and they were all quite happy. One day, all the people came together and said they were going to make a bigger garden for their chief, the night-jar. The children went too, and played in one of the cassava gardens. One of them dug up some roots and showed them and the night-jar passing and noticing this, was very cross and began abusing the children and their

[1] British Central Africa, p. 325. [2] Op. cit., p. 139.

3: Stanna D-5 (ca. 1912) 1922 FT7 Yao FT7

539

mothers. When they heard the abuse, everybody stopped hoeing, put their hoes on their shoulders and with their wives and children went away, till no one was left in the village, except the night-jar and his wife. "I don't know what I am going to do. I must run to the guinea-fowl and see if he can put this affair right," said he. He reported to the guinea-fowl all that had happened. Then the guinea-fowl said, "You have broken the rules. It is too late; it is finished and I cannot give you medicine to call them back. It is your own fault." The night-jar said, "I think you can help me. Give me medicine to make me invisible. If you do not, the people may come back and kill me." "For that I will give you medicine," said the guinea-fowl. "Now, after you and your wife rub yourselves with the medicine, as you sit together a man can walk past you and not see you." So they got the medicine and went home and used it. And that is why you cannot see the night-jar now as he sits on the road when you pass.

The Story of the Hornbill (Lipomombo)

Once upon a time, there was a man named Lipomombo. He lived in a village but would not conform to the customs of the people. This the people did not like. Especially did they take exception to his refusal to attend the last rites for the dead. Once again he was asked to pay homage to the dead and accompany the funeral procession of a fellow villager to the grave, but he refused as usual. Soon after, his own child died, but no one came to offer help in preparing the body or in carrying it to the burial ground. Not knowing what to do, he tied the body up and put it upon his head and so left the house to search for the burial place. "*Ku malembe kuse?* Where are the graves?" he asked the first man he met. "I don't know," was the reply. He wandered on, putting the same question "*Ku malembe kuse, kuse, kuse?*" to everyone he met but no one apparently knew. So he wandered on until the body became rotten and ran down his nose and dripped off the end. He has been wandering ever since with the last piece stuck on his nose, always searching for the graveyard and asking "*Ku malembe kuse, kuse, kuse?*" and all his descendants do the same.

Moral: Conform to the customs of your race. (Note the beak of the Hornbill and its call.)

The Story of the Young Man Thinking the Advice Given to Him by His Father

There was once an old man and he was dying, so he called his son to him and said, "I am dying, but before I go, there are three things I wish you to beware of doing: Firstly, do not tell your wife your private affairs; secondly, do not make friends with a policeman; thirdly, do not borrow money from a poor man but from a rich man." Having uttered these warnings, the old man died. No sooner was the burial over than the son thought over his father's words and decided to try and see whether there was wisdom in them, he went along to a poor man he knew and borrowed shpence and to a rich man and bor-

3: Stannus D-5 (ca. 1912) 1922 FT7 Yao FT7

539 rowed a sovereign and thence home. Saying nothing about the money, he left his house the following morning and bought a goat. Waiting in the bush till dark, he killed it and then bound up the carcass in some grass and carried it to his hut. Arrived there, he excitedly told his wife he had killed a man and wanted to bury the corpse which he had brought with him, under the floor of the hut. So the woman brought a hoe and together they dug a hole in the middle of the floor and having deposited the body in it, the earth was filled in and the woman replastered the floor with mud, and made her cooking fire over the spot. "Now," said the young man to himself, "my father told me not to tell my wife any of my private affairs and not to borrow money from a poor man. Both these I have done. One thing remains; I must find a policeman to make friends with." Going out, he met two policemen, so he said to one of them, "I should like to be friends with you, come to my house"; and the policeman agreed and went with the man to his house and a fowl was killed for them to eat. He introduced the policeman to his wife as his friend and she started cooking porridge. When it was ready, she brought it outside to the two men who were sitting on the veranda of the house with water to wash their hands and they commenced eating. Then the man called his wife back, saying the porridge was not well cooked — "It is only fit for dogs!" — and struck his wife a blow. The woman immediately appealed to the policeman to protect her, saying her husband would kill her as he had killed a man, a short time before. So the policeman arrested the man and took him away to the magistrate. The magistrate sent the police back with the man to the village to find the body of the murdered man. Its resting place was pointed out by the woman and after digging, they found the body tied up in the grass. All said, "It is just as the woman stated!" and they began striking the man and made him carry the body back to the magistrate. On the way, they met the poor man, who on seeing his debtor cried out, "Where are you going, where is my sixpence?" "I am going to the magistrate. I am supposed to have murdered a man," he replied. "Where is my sixpence? You will get hanged and I shall be the loser!" yelled the poor man. "Wait a bit, I may not be killed," said the man, "I may be able to pay you back presently." "No you won't, you will be hanged," was the reply and the poor man hit him as he passed. Later, the party met the rich man and the accused called to him, "I am in trouble and don't know when I may be able to repay you your loan"; but the rich man answered, saying, "Never mind about that now. I am sorry you are in trouble." When they came before the magistrate and the man put down his load, it was opened and the body of the goat disclosed. Then the magistrate asked the man what it was all about. So the man related his story, telling the magistrate how he had wanted to test his father's advice, and how it had all proved to be good advice.

Note: The story as given here is doubtless an adaptation of an older story to present day conditions. I have not been able to get any more original form.

3: Stannus D-5 (ca. 1912) 1922 FT7 Yao FT7

About the Greedy Man (Jua Mlume Juakuchukwa)

Once upon a time, there was a man and he went and set a trap and caught an *mbendu* (genet cat). So he brought it back to his home and singed the fur off and partly roasted it, and then hung it up from the roof inside his hut without telling his wife to cook it. It was in the summer time. One day his wife said, "I am tired of gathering herbs to cook for your relish. What about the animal hanging up there? Shall I not cook it?" The husband replied that not for anything would he have it cooked. "I am going to keep it till we get our new crops in," he said. So the woman said nothing and time passed and the little animal got as dry as a bone. One day when the man and the woman had gone to hoe in their garden, the *mbendu* came to life again and jumping down, found the basket where the woman kept her clothes and beads; opening it, he took them out and dressed up in them. Thus arrayed he went out of the hut and came to the place where some women were pounding grain; so he began to sing and danced to them. His song was:

"*Achambumba'we kutuse'ko misi jose lecko lecke, mbwi! jukutu! jukutu!*"
"The women (who were) pounding there pounding sticks all they have left!"

and he told the women to sing the chorus "*Nanchalamunda!*" (*Mbwi* is the word used to indicate the sound and action of a short hop on both feet like a bird or some steps in a dance. *Jukutu* similarly has reference to the movements of the buttocks in dancing. *Nanchalamunda* means "very dry," referring to the *mbendu* and the treatment he had suffered.) So they all danced together, but when he judged the people would be going back to the house, he escaped and ran back to the house and putting away the clothes and beads in the basket, he went back to his position hanging from the roof. This went on for several days and many of the boys and girls in the village used to go to the pounding place to see *mbendu* dance. One day the child of the man who had caught the *mbendu* recognised the cloth he was wearing as belonging to his mother and noticed him go back to their house. So he went and told his mother and father who, when they looked into the basket, noticed that the things inside had been disarranged and that the cloth was dirty. So they said they must find out what was going on, and next day, pretending to go to their garden, they hid themselves. Presently *mbendu* came down, put on the cloth and beads and went out of the house to dance as usual. When the man and his wife appeared, he ran away to the house, threw off the cloth and hung himself up to the roof, but he had not quite shrivelled up dry again when they came in and discovered him. When *mbendu* saw that he was found out, he jumped down and ran away, this time quite free into the fields, so the woman rowled her husband for saving up the animal in greedy fashion so long.

Note: When telling these and other stories, there is a regular formula with which the narrator prefaces his discourse. The story-teller begins:

539 *"Lakuta lakuta kuuda ka!"*
"Picking up picking up a little basket full!"

to which the listeners exclaim

"Lakutaa!"
"Overflows!"

At the completion of each sentence in the story, one of his listeners will exclaim, "Go!" When he has finished his story, he says,

"Ajakala katala katakuunga pantoo pakumaa, unko chipanji!"
"Take off the fire, the little mouse lest it be singed, by the head it is very hard, the hair (is) in a lump!"

During the intervals of a long story, one of the listeners may break in and sing some little song, such as the song of the *mbendu* in the story of the greedy man, thus giving the story-teller a rest.

342λ The house and household utensils. The Yao house does not differ greatly from the Nyanja habitation which I have already described elsewhere.[1] The accompanying figure (Pl. XIV, fig. 15) gives the circular plan of a hut with a veranda partly open and partly enclosed to form a room. The central pole of the hut is indicated, the hearth (H), the position of the sleeping mats (M), and the place where the water pots are kept (P). The 352λ bed may be a bamboo platform supported by forked sticks a foot above the ground (*usungwali*), or a dais of mud, over which is spread the sleeping-mat, *upasa*. (Pl. XIV, fig. 14.) Seats, *chitenga*, are made of logs of wood with conveniently placed branches acting as legs. I have seen a symmetrically carved log with shaped legs all in one piece, which suggested by its form and by the presence of a button on the midline of the under surface that it was made in the imitation of an animal. Plank seats with peg legs are now sometimes seen. Wooden pegs are driven into the wall and serve to hang odd articles upon.

[359] The hearth is simply a shallow depression in the mud floor, around which are placed three large stones to support the cooking pots. Sometimes a canopy is built over the hearth, consisting of four upright poles supporting a platform made of reeds and grass, upon which millet and other seed grains are often stored. From this platform *lipulu* (*tsanja*, [251] Chin.), the gourd containing the supply of salt is often hung. The seed grain tied up in little bundles is suspended from the *lipulu* where it becomes very dry and smoked, without any ill effect to the next year's crop. (Pl. XIV, fig. 16.) Four pronged branches of trees are often stuck in the ground with a string tied around the prongs, and used as holders for gourds, salt bottles, etc.; this device is called *lipanda* (*phanda*, Chin.). (Pl. XIV, fig. 10.) 415 The smaller utensils include the porridge stirring stick *mtiko* (Yao and Chin.) (Pl. XIV, fig. 12), several wooden spoons *chikowi* (*chipanda* or *nsmakwa*, Chin.), (Pl. XIV, figs. 11, 13), a number of gourds of various shapes and sizes used as ladles and drinking vessels,

[1] 'Notes on some tribes of British Central Africa,' op. cit., p. 330-333.

524 857 on a stone. They explode with a noise like the sound of a gun. The boys send them off, one after the other, imitating fighting, or sometimes bang them down on some one's head. They go off, making the sound *tpeuu!*

Small boys or girls among themselves play a clapping game called *ppujila*. One sings:

[539] "*Ppujila ppujila, ppujila ppujila, ppujila ppujila, jumpere mangi'je pa mlango pa' mau!*
"Swup swup swup swup swup swup the one who has passed excrement the at the door at his mother's,

Napumbe, hama, hamili!" etc.,
let him clap once, twice!" etc.

They all clap together at the word "once," "twice," and so on. No one knows how many times they are going to be called on to clap, and some one is sure to clap when no word is given and so is caught and made fun of, as the one who has misbehaved.

[152 80] *Likwata* (*ku-kwata*, to clap): simple clapping when pleased with anything is commonly indulged in, mostly by women and girls.

Little girls play at making little pots. This is called *gumbeiwipu*, (*ku-gumbe chiwipu*, to model a pot). They also play at pounding grain, called *chindichi*, "learning to keep time," the word itself being an imitation of the sounds. Five or six pound in one mortar; in between strokes, they throw the wooden pestles up in the air, catching them again to time.

[539] "*Jukupikula katuli jal ojo mauni jo akulogal!*"
"The one who upsets little mortar the! that one witch is bewitching!"

This is the song of a game played by little girls. One sits in the middle with a *singwa* on her head, to represent a grain mortar, while the others form a ring round her holding hands. As they sing, the circle at one point swings in, and one of the girls passes in front of the one sitting down, her back to her all the time, the hands passing over her head. This they do one after the other very quickly and anyone who touches the girl in the middle, "who knocks down the mortar," takes the place of the girl in the middle.

[539] "*Amwanangu Amwanangu ajokati wha!*"
"Our wives, our wives, cutting off (interjection)!"

is the song of a game played by a lot of boys together or a lot of girls together; they do not join with one another. Two opposing groups are formed of equal numbers. Each is led by one of the older children and behind him is the rest of the group, each holding on to the cloth of the one in front. The followers of each leader represent his wives. The two parties then sing and maneuver for the leader to get at the tail of the other group and "collar" a wife or two from his opponent. It becomes very exciting. As they go faster and faster, some of the tail may get swung off and captured by the other side before they can again join their own.

3:Stanner D-5 (ca. 1912) 1922 FT7 Too FT7

Trapping and catching of animals is pursued with great glee by small boys. They make many of the traps, particularly the two kinds of *kilimo*, *chipolo*, *chijumbo*, *chimwa*, *limomo*, and *upao*. *Lilimo* is set in rat runs and the rats are driven into them (Pl. XX, fig. 6). Digging-out rats is a favorite amusement for the boys and brings meat to the pot. May is the best month for this sport. They are adepts at recognizing burrows which have rats inside. Digging is commenced at one entry to the rat-warren, the escape holes being closed with tufts of grass. As they get nearer the rat chambers, they smell the earth and so know when they are quite close to the rats. A bunch of grass is then put in this hole, lighted, and kept aglow by blowing on it. One of the rats will try to bolt and is knocked on the head. His head is then squashed to kill him effectually, and the skin of the tail of the first rat is always pulled off for luck, "so that they may catch many." They will try to guess how many there are going to be, "ten and ten and five and two!" Each rat when caught is buried under some earth, so that the hawks will not swoop down and carry it off. When they have finished one warren, one of the party is appointed to carry all the rats. He ties a string round his waist, and the rats are slipped underneath it and so secured. They then go on to another; the carrier will bear the whole catch for the day and may, before they have finished, have several strings of rats round his body, one above the other. 224 857

Digging-out crabs, *ku-kepe upala*, is another favorite amusement for children; (*ku-kepe* is to dig up anything like mud which makes a squelching sound). Crabs are never eaten with flour, but always with *usanie*, the grain kanka, "crabs and brown-bread!" 226 857

Youths and girls fish with a rod, line, wire hook, and worm, *ku-lipunga ziwaba*, to pull up fish. They also catch fish, using the fish poison, *ntuto*. Birds are killed with a bow and a blunt-pointed wooden arrow. [223] [411]

A small boy, seeing a girl or a younger boy with a cob of maize and wanting it himself, will say, "Let me make a path to the coast!" He will then remove, say a couple of rows of maize grains for himself, much to the interest of the owner; or "Let me make *ilombe*" (*ilombe* is a shaved head on the scalp), or "Let me make the crab's eyes!" when two military grains are left, surrounded by a simple ring of other grains, as the girl's portion. 857

Children are taught a little saying about their fingers which reminds one of the "This little pig went to market" of one's infancy. Starting with the little [illegible] they say: 857 524 539

"*Akulu* *kanyinku* *kanyinku!*"
"This little one (is) the one which cannot draw water!"

Pointing to the ring finger,

"*Kambalagwe* *ujanyanda!*"
"This little one's brother (is) the one that picks the nose!"

To the middle finger,

"*Ujanyanda* *ananda* *ananda!*"
"(The brother of) the one that picks the nose (is) the one who finishes meat!"

3:Stanzus D-5 (ca. 1912) 1922 FT7 Yao FT7

857 To the index:

524 "*Lukungulo lwa ng'ombe lwa kumdala wangulumbe!*"

539 "(This one is) the leg of an ox which walks on the plain!"

To the thumb: "*Chamanso*"

"The fifth"

857 524 *Cat's Cradles* are known as *chitapu*, "the spider's web" (Pl. XXIII). The position of the string on the hands is as in Position I of Miss Haddon's book and this is followed by Opening A, given by the same author.[1] (Pl. XXIII, figs. 1, 2.) Three methods of arriving at the same figure, which is called "the net," are shown here (Pl. XXIII). Variety C is followed by the making of a knot, figured in C 13, known as "the child." There are probably a number of other forms made by natives, but these, which I saw one of my women patients make, will serve as an example.

534 **Musical Instruments.** The number of instruments proper to the Yao appears to be small, indeed probably only two in number, the *mangolongondo* and the *chitepu*, with perhaps the three holed flute, *chitolivo*.

The former is constructed on the principle of a xylophone; it consists of two trunks of banana trees laid on the ground and held in position by stakes. They are not quite parallel but approach each other somewhat at one end, being from one to two feet apart; on these rest cross-wise a number of pieces of wood of varying thickness and length, kept in position by pegs driven into the banana trunks on each side of each billet. These are struck with sticks by a single player, or by two persons sitting on opposite sides of the instrument. Another variety is found in which the pieces of wood, which may have holes bored in them to effect differences in sound, are arranged over a hole scooped in the ground (Pl. V, fig. 1).

The *chitepu* consists of a piece of plank hollowed out to form a resonator on which are fixed a number of keys of bamboo or metal of different lengths. These are arranged across a bridge, and the free ends are set in vibration by twanging with the fingers.

[171] The instrument now most commonly seen is the *asse* which was introduced, I think, from the coast about 1890 to 1900. It is a type of guitar.

An instrument played by women — and this again is of recent introduction among the Yao — is the *mbungulu*, which consists simply of a stick of wood about a yard long to which is affixed a single string. One end is held between the teeth, the other in the hand; it is twanged by being struck with the thumb and finger of the other hand close to the mouth, which is opened to different degrees, and gives a variety of notes resembling those of a jews' harp.

The *ching'ungung'ungu* and drums are referred to under *Dancing*.

[1] Kathleen Haddon, Cat's cradles from many lands, New York, 1911.

3: Stanton D-5 (ca. 1912) 1922 FT7 Yao FT7

534 *Ntapulipu:* like *kituti*, but played in a different way, giving the sound "*tpu tpu tpu!*"

Makuwe: the same as *kituti*, but with a higher pitched note. This can be produced by heating the *kituti* drum over a fire.

Chikwewa or lingoko: a small drum eight to ten inches high, held in the hands by strings on either side, in the same way as a concertina, and pressed against the chest while being played with the fingers. It may be alternately pressed firmly and lightly against the chest, giving variety in timbre. The base which rests against the body is cut down into a kind of foot-piece (Pl. XXII, fig. 13).

Chinyungu: a small drum eight to ten inches high, rather goblet-shaped with stem and base, the circumference about equal to the height. It is beaten with two sticks, "*nyungu nyungu!*" (Pl. XXII, fig. 17).

Chimisinga: the same drum played with two sticks, "*mini, mini, mini!*"

Ndimba: a small three legged drum about the same size as *chinyungu*. It can be carried in one hand and played with the other. It is used with one stick or more, in place of *chinyungu* and *chimisinga* (Pl. XXII, fig. 16).

Mwiwu: an old drum not now used. It varied in size from one to four feet long, was suspended from the neck, and played at both ends (Pl. XXII, fig. 14).

It is very difficult to give any idea of the time and different sounds the drums give. People learn them by repeating the sounds the drums make thus: *Ndi dhu di ndyidi ndi dhu di* mini mini ndyi ndyi, etc. Several drums, often six or more, are played together, each contributing its element of sound. They are often played very fast, but the time kept is most exact.

535 Dances are ordinarily performed by everyone in a village, but there is always a leader. Or again, there are trained bands of dancers who earn their living by attending ceremonies or any festive occasion. In a few cases, the dances are only danced by professional dancers. A short account is given below of many of the Yao dances.

Likwata: (*lu-kwata*, to clap the hands). No drums are employed, but the time is kept by clapping. In some villages, drums have lately been introduced. It is a common dance in a village on any moonlight night, just for amusement. Women and girls take part. Standing in a circle, they sing and clap, while any who wish, go into the circle, perhaps a dozen at a time, and dance their shuffling steps. A song which is included under *likwata*, is a representation of the dung-beetles (*mzuzi*) rolling the little balls of dung to their resting places. The women shuffle backwards or forwards, like the beetles, one pushing and one going backwards pulling. As they dance, they sing:

● [534] "*Likwata, tuti tuti!*"
"(oh little) dung-beetle, push push!"

Refrain:

"*Likwata mzuzi!*"
"It is rolling dung!"

535 **Ching'ungwe'y'ungu:** A soldier dance alone, playing a single-string vial with a bow as he sings. His songs are all about people, village splendor full of personalities and many whitlows. Kondwani of Malunya's was a well known performer (Pl. I).

533 **Songs.** The following are some of the Chindimba songs:

539

I

1st voice. *Kutumbila anyuwe nyumba ambilanda ayuwe kwaqu?*
To be angry the owner of the house strangers they sleep where?
2d voice. *Kutumbila anyuwe nyumba Che Hishiko ninjiwa.*
To be angry the owner of the house (Mr.) Hishiko I shall die.
1st voice. *Kundwaqu unami undishiye,*
To ask me to answer for you.
2d voice. *Kundwaqu unami Che Ki'ungu,*
To ask me to answer for master,
1st voice. *Alawa ningunda iyaqu,*
Brother-in-law I will go then,
2d voice. *Alawa ningunda iyaqu.*
1st voice. *Awala wawuche ayiie wuhilawuwa.*
There (go) the children they go on all fours.
2d voice. *Ok lelo'ja ninjiwa.*
Ok today I shall die.
Chorus. *Kutumbila anyuwe nyumba!*

The burden of the song is: We are we are not wanted here; better we want away!

II

1st voice. *Ah lijuwi'wa kale kale kapuka nakapuskaja lelo'ja!*
Ah balloon there jumping jumping to enjoy he is going to enjoy today!
2d voice. *Ah lijuwi'wami kapuka nakapuskaja wamunda!*
Ah the balloon there to enjoy he is going to enjoy child!
Chorus. *Kulya nakunda nya nyamu!*
to eat (seed) pods of dryanu!

"Seed pods of dryanu" is also referred to in a story of the balloon. When he is dozing at night sitting on a tree, he hears a seed-pod in the neighborhood crack, and wishing to mark the spot, so that he may go and eat the seed in the morning, he stretches out one arm in this direction and goes to sleep again, to be awakened by the sound of another cracking pod; whereupon he puts out another limb to mark that spot. Presently, he has all lost one limb including his tail set out as sign-posts. Half awake he starts to put out the one remaining limb, and falls off the tree.

530
531

5

1st voice. *Ahuhili* [illegible] *ngungu* *pitile ejo* [illegible],
[illegible] *ndi! Ihuili yoo* *yoo*,
2d voice. *Ahuhili* [illegible] *ahuendeula* *ahiyawa'ne* *nungu*.
[illegible] they are calling me *Ahiyawa* there is going away home;
Chorus. *Ewuuh, ahuhuhi!*
Remove the hoe from its handle!

The name of any person may be introduced into these songs, sometimes the name of a member of the village or of some person well known in the district. To introduce a name then is *ku-hunda*. *Ejo!* is an exclamation of thanks; when receiving anything, both hands are held out, and the words *ejo, ejo, ejo!* or *nungu, nungu!* are uttered.

6

1st voice. *Mululumula* 'pitile *nundu* [illegible] [illegible] [illegible].
The millet have eaten beneath you place did not plant *ooo*.
2d voice. *Ululile* *nundu* [illegible] [illegible] [illegible], *ahili*, [illegible]!
Have eaten beneath you place did not plant *ehee*, father, *ooo*!
2d voice. *A-pulupulu* [illegible] [illegible], *ahili*, [illegible]!
1st voice. *A-pulupulu* [illegible] [illegible], *ahili*, [illegible]!
Chorus. *Mululumula, pitile nundu!*

Mululumula: after the first crop of millet has been taken in, the stalks are not cut down [illegible] the ground and the roots allowed to remain in the soil. Next season, they again sprout and yield a second crop. This second year growth is *mululumula*.

8

1st voice. *Mwimbe w'ahiyawanda* *ahile ahile ahilee ahile ahile!*
Lions in the palm-trees at night, etc.
2d voice. *Mwimbe w'ahiyawanda*, *kuimba lihunda Ahiyawa! Pagiwa* *ahile* *ahile* etc.
Lions in the palm-trees to sing *lihunda Ahiyawa!* I shall die tonight, tonight, etc.
Chorus. *Mwimbe w'ahiyawanda!*

Lihunda is the name of a dance, *Ahiyawa* is a woman's name. Cf. "Let us eat, drink, and be merry, for tomorrow we die."

9

1st voice. *Ndundu, ndundu, ndundu!* Repeat.
Trading, trading, trading!
2d voice. *Ndulugu* *ndundu tendu*, *ndundu'ne*, *nyumba!*
If you have trading trading, *ndundu'ne*, I am going away!
Chorus. *Ndundu!*

533
539

7

1st voice. [illegible] [illegible]
The one whom we were talking about, here he is! that thing which happened some-[illegible]
three ago, the day after tomorrow!
3d voice. [illegible] [illegible], [illegible]
(a woman) is going that thing which happened some three ago, I am all!
Chorus. [illegible] [illegible] [illegible]
You give aid who has lies (lied to) you!

The meaning of this is: " If a man comes along who has done you an ill in the past and is just as likely to do so again, should you be inclined to reward his lies by giving him hospitality? Better to go away and leave him alone."

8

1st voice (male). [illegible] [illegible]
The little lip ring that, come and wash it! Repeat.
3d voice. [illegible], [illegible], [illegible]
The little lip ring that, you talk over there, come and wash (here today)!
1st refrain. [illegible] [illegible]
Lest it turn into trouble-[illegible]!
1st voice (female). [illegible] [illegible]
What about heard your? Refrain.
3d voice. [illegible] [illegible]
What about heard your father? Refrain.
3d refrain. [illegible] [illegible]
Lest it turn into [illegible] (part of a [illegible] refr).

9

1st voice. [illegible] [illegible]
Why are you crying [illegible] the [illegible]!
3d voice. [illegible] [illegible]
I will take her to her own house [illegible]
Chorus. [illegible] [illegible]
I am going to look for [illegible]

This refers to a troublesome wife. " Let her go back to her mother and the husband will go about his own business."

10

1st voice (woman). [illegible] [illegible] [illegible] [illegible]
If I were not discouraged then I would have been still [illegible]! Repeat.
3d voice (man). [illegible] [illegible] [illegible] [illegible] [illegible]
If I were not discouraged then I should have been [illegible] [illegible] [illegible]
[illegible] [illegible] [illegible] [illegible]
[illegible], [illegible], [illegible], [illegible]

1: Dunnage D-5 (on. 1912) 1922 FT7 Tao FT7

Taking advantage of the natural inquisitiveness of youth, a favorite trick for making money is for a man to appear in a village making pretence of having a peep-show, something mentioned in a covered basket or in a cloth. On payment of some small amount, the youth is allowed to peep in, maybe only to see a dead mouse; finding he had been "done," he of course bursts out laughing and, anxious that all his companions should also be "done," he does not "give it away" and so the peep-show man makes quite a good living.

Two girls play with dolls of two kinds, *Ndola*, made from little gourd-like fruits called *Mungu*, and others called *mamanda*, "a child," made from maize cobs. These dolls they carry about on their backs as mothers do their children. *Ndola* is made of three of these little spherical fruits glued together with beeswax; on the one which represents the head, wool, red and blue, of the *ulungwipe* tree are mounted in rows to represent hair, and often beads, as in the modern method of hair-dressing. One now similar doll made for the children of other tribes. Thus, among Mandawa's Angoni, a doll called *mamma*, "a child," is made in a dumb-bell form of two small spherical gourds joined by a bundle of sticks bound together with string and wax; on the head-piece string is mounted to represent hair. Their children also play with little clay images of cattle and men, a custom they have preserved from their old Zulu ancestors but foreign to the Yao. The *Ankonde* children have carved wooden dolls not seen in any other tribe. *Mamanda* is made from a maize cob by shredding the papery coverings of the cob; on these shreds are threaded white and red varieties of maize to represent beads, or the shreds are plaited into a number of tags to represent hair.

Latterly, the children have taken to making hoops and show considerable skill in driving them with a piece of bent wood (Pl. XXII, fig. 8), while the older boys make two-wheeled representations of bicycles with a very clever imitation of all the parts of the machine.

The whipping-top, *mangulipe* or *mangungu* (*ngoli*, Chin.), is found among the boys' toys. It is made of a conical piece of wood with a flat top and no metal peg. It is started spinning by pulling off the string wound round the top. The whip consists of a piece of string fastened to the end of a stick. Sometimes tops of large size are used, and two boys whip them from opposite sides (Pl. XXII, fig. 4).

A game called chipoto is played by youths. It takes the course from the-pots, to strike, and refers to the action of striking with a finger the head in which a bean is pressed to be. A spiral is drawn with the finger in the sand with a central point to represent a village, and a tail-piece prolonged on one side to a second point which represents a show-market on the coast. Along the line, a number of other points are demarcated to represent sleeping places on route. At the village, two white beans are put to represent the two players and with each is a smaller brown bean to represent his slave. At the show-market are placed a variety of beans to represent trade-goods, cattles, beads, etc. Each of the two players in turn shakes a single bean in his closed hands and then shows the hands, separating them at the

3:Stanna D-5 (m. 1912) 1922 FT7 Too FT7

Chipilipe: (*ku-pilipa*, to roll round), a bracelet made of beads wound on a bark-cloth cord. 301

Chipe: the same, but the beads never a double row so that the bracelet is wider.

Mudu: a slender hollow cylinder of beadwork which lies flat as a bracelet.

Necklaces are much prized by the women. All the children, too, if possible, are provided with some kind or another, even though it be only a piece of string. They are generally made of beads; charms and their ornamental imitations are also worn as necklaces. Some names refer to the pattern of the beadwork, others refer to the length or fashion of the necklace.

Chilupe is a necklace which hangs down in front to the level of the breasts; it does not go under the arm, as Hetherwick states.[1] It consists of three, four, or five strings of beads in rows, arranged in a pattern.

Angapajo: hangs down as far as the ankles. The word *Angapajo* means "chase me!"

Chingenge is made of a single string of beads, but hangs as low as *chilupe*. *Chilupe* is of more than one string and various coloured beads enter into its composition, often in lozenge patterns.

Chipete: consists of a single string of beads of one color tied tightly round the neck without tassel or beads.

Chikwendu is worn like *chingenge*, but beads of more than one color are used.

Chikwenge resembles *chilupe*, only more strings of beads are used.

Mapwendu: a solid cord of bark cloth covered with beads of one color, either dark blue or white, worn round the neck crossing on the chest and under the armpits; the cords are as thick as the finger. These are worn especially by girls after *Chipete*.

Chiwendu: a cord of beads as in *mapwendu*, but worn round the neck only. The necklace consists of perhaps six strings of beads, the first of which is worn close to the neck, while each succeeding string hangs lower and more loosely.

Chipet or *chilulijo:* made of three plaited strands of beads, generally white.

Kiskulilo: a necklace with a tassel, usually consisting of two large red beads.

Mbele ("a striped snake"): made of four strings of beads, each row being of one color.

Mbele nshwane ("the cat's tail"): *like mbele consisting of two, three or four strings* of beads.

Chowa cha mundu (*mundu*, "bag"): a hollow cylinder of bead work usually of blue and white, worn as a necklace. *Chowa* is the Chiyao word for beads; in Chinyanja, it means wealth.

Limunde is a word referring to the pattern of the beadwork, so called from the resemblance to the eyes of the *mono-mui*; in *limunde*, white beads are arranged in rosettes round a series of larger black beads in a band.

Most women and many children wear beads round the waist. They are supposed to be very attractive to men. The prostitute wears more than anyone else, for the same reason

[1] Op. cit., p. 111.

3:Swanson D-5 (ca. 1912) 1922 F77 Yao F77

30 that she is tattooed more profusely on the buttocks and legs. The student of beads was formerly made like waponde with a bark-cloth cord, called *ndumbo* or *mbale* (to-wrap, to slip off), referring to the mbale being slipped off over the legs. The fashion now is to wear single strings of beads; each string is of one color but all the strings are different and perhaps number a dozen or more.

Lipondo: a bead belt three-inches wide, worn by Yao women near Lake Nyasa. A bead apron, *Ilanjaw*, is also worn by them but not near Zomba (Pl. VI, fig. 2).

A woman removes her beads when she is "unclean," that is: (a) during the menstrual period, (b) during the period of mourning for a near relative when coitus is forbidden, (c) before the birth of a child and afterwards until such time as she may resume intercourse with her husband.

A large variety of beads has long been used by the Yao. There are some rarely seen now which were much prized in years gone by, while others are of quite recent introduction. There is no evidence that they themselves made beads and there are few which are probably not of European manufacture.

Clothing. The Yao used bark-cloth before the introduction of woven materials. The older people may still be seen in it and it is used in most of the mountains. At one time, they also used to weave a cloth called *likamondo* from a native cotton plant. This has been given up since the introduction of imported materials.

For the method of wearing cloth, see Pl. II, fig. 2. The very poorest people wear only a strip of calico round the pudendum, held in position by a string round the waist hanging long behind and in front; this is called *mbalu*. Yao women, when menstruating, wear under this a little piece of cloth called *likamba*; it is only worn at this time and not always so in certain other tribes.

Warfare. Fighting has naturally played a large part in the life of the Yao as among other African tribes, but at no time were these people a trained fighting race. Warfare was of a desultory character consisting mostly of raids by one local chief upon another. A party of men belonging to a chief at enmity with another, meeting some of his followers would challenge them, "*Ahombe, who are you for?*" The name of the rival chief in answer was the sign for battle to begin. A false answer would never be given to gain an advantage. When about to throw a spear, the thrower calls to his adversary.

The Yao have possessed guns for a long time. Going out to fight, the Yao used to leap from one foot to the other, and spin their guns around in their hands. They made their own stocks for the rifles. They also used to make a small, cast-iron cannon about three feet long, called *kombola*, "a little man." It was carried in the arms and was touched off by a torch. Drums called *ngoje* were taken into battle. There is an old war drum at Mdemeya's village, taken in 1886 by the old Mdemeya from a *Mang'anja chief* called Mkokombo who lived near Lake Chirwa. Since then, this drum has always gone into battle with Mdemeya. Around it his men would dance and anyone who had killed a man in battle would run up to it and spit upon it in admiration.

2: Mitchell E-5 (1946-1949) 1956 FT7 Yao FT7

CHAPTER III

THE COMPOSITION OF MODERN CHIEFDOMS

Chiefdoms in the Administrative Mould

361 NO less than in MacDonald's time, modern chiefdoms are in the first place organizations of villages. Physically, the villages consist of solid pole and daub huts of varying sizes. [342] Some huts are rectangular, twenty feet long and fifteen feet wide, with glass windows, panelled doors, and thatched roofs. Others are small and round, about eight feet in diameter. There is also a considerable variation in the compactness of villages: often the huts are only a few yards apart, but sometimes at least a hundred yards or more. Most villages, however, could be circumscribed by a circle of a quarter-mile diameter, though, of course, there are many exceptions. There is a slight tendency for the village to spread itself along a path, in a way faintly suggesting ribbon development, but on the whole there is no particular physical pattern to the Yao village. In fact, though most villages have fairly distinct physical boundaries, and are definitely discrete clusters of huts, some are difficult to identify in this way. To the minds of the local people, however, the 62 village is quite clear and distinct. This is because they see the village primarily as a social unit, and tend to impute into physical boundaries more definition than actually exists. It is in the social sense that I use the word here: the 'village' is a spatial group which recognizes its identity against similar groups.

The importance of the village in Yao structure can hardly be over-emphasized. Membership of a village provides the first index whereby people determine a stranger's background. If, after village membership is fixed, no other links can be found with a stranger, such as distant kinship, the relationship will remain at that level. A gossip identifies the person about whom 62 he is speaking by giving his or her name and the name of his ● 55 or her village. He says, 'Be.[1] Mwana of Cigwaja village'.

[1] I use this abbreviation for the Arabic 'binti', 'daughter of'. Bini, pronounced 'bini' by the Yao, with Ali and Wali, 'son of', appear commonly in Yao names.

2: Mitchell E-5 (1946-1949) 1956 FT7 Yao FT7

The chief identifies a man who comes to see him in exactly the same way, and the Administration has adopted a similar system, except that it has its own definition of the village. During the initiation ceremonies, the initiands[1] are housed in long grass sheds which are subdivided into sections. Each section or room of the long shed houses the boys or girls from one village. If villages share a burial ground, they have allotted portions where they bury their dead separately. In these and many other ways the village is looked upon by the Yao as a distinct unit in the chiefdom.

The chiefdom in the old days was distinctly a territorial unit and all the villages within that area recognized the superiority of the chief. The boundaries of the old chiefdoms were marked by rivers and hills and fixed after conquest and agreement. They are still well remembered. Modern chiefdoms are defined in their limits partly by Government decree and partly by custom. When Principal Headmen were appointed, the districts under them were demarcated with 'due regard being given to the composition of the Native population'. The traditional areas under the various chiefs, therefore, were recognized by the Administration as districts, so that the districts or their sections almost coincided with the chiefdoms. Some disputes between chiefs over boundaries have occurred from time to time and the Administration has had to arbitrate. For example, the Provincial Commissioner of the Southern Province reported a difference between Liwonde and Kawinga in 1936,[2] but through time these differences have been eliminated.

Traditional and Administrative boundaries do not coincide in a few places, for two reasons. Firstly, the Administration has accepted an obvious and physical boundary in preference to an indistinct and social boundary. It has taken the Domasi River as the boundary between Ntumanje and Mposa, though in fact a few villages under Mbela, Kawinga III's son, live on the south side of the river, and fall for Administrative purposes in Ntumanje's area. Mbela is still very strongly associated with Kawinga in ritual and kinship matters. His dealings with the

[1] I am grateful to Prof. Schapera for suggesting this word for those who are undergoing initiation ceremonies. The parallel is with graduands, i.e. those who are undergoing graduation ceremonies.

[2] *Report of the Provincial Commissioner, Southern Province* (1936), 20.

2: Mitchell E-5 (1946-1949) 1956 FT7 Yao FT7

622 Mapata's installation ceremonies. When an important headman succeeds, however, the chief himself usually makes a short appearance and talks to the people. When Nyenje was installed in July 1947, Kawinga attended. Nyenje has the same clan-name as Kawinga and is an Invader. In 1947, he had 109 tax-payers under him; he held rights to both initiation ceremonies, but he did not have the right to wear the scarlet headband. Kawinga arrived at 11.18 a.m. before Nyenje had come out of the hut and he went straight to it and entered. He emerged at 11.45 and sat on a chair under a drying stand. Kangomba, his head *ndunu*, came and sat with him. In the meantime the new headman was brought outside and seated on a chair. Sitting on either side of him on the mat on which his chair was placed, were his two wives. Nsanama,[1] a minor village headman of the same clan-name as Nyenje, officiated. The penny-giving now started.
622 At 12.10 Kawinga got up and walked over to the crowd, and silenced them with a sharp whistle. They gathered round to
527 hear his speech. He pointed out that the dispute about the succession to their headmanship had been going on for three or four years and that there had been two candidates, one of whom he had selected as successor because he knew he would be sensible and wise, and would look after his people in the village and in the smaller villages under him. He said that he had recommended this man to the District Commissioner who, with the Governor's sanction, had supported him. He did not therefore want to hear that the man had fallen ill; he dealt strictly with sorcerers. He said that respect started with the relatives: brothers and sisters, the husbands and the boys and girls must
[551] also respect 'the chief'. They must not mention his name but refer to him as 'the chief'. Kawinga went on to say that some husbands were evil and could split a village like this one, by telling lies to the headman and falsely advising the headman that his sisters were talking behind his back and insulting him. When he hears this he may break the village by ill-treating his relatives, thereby causing them to migrate and leave him all alone. Kawinga told the people not to go talking in other villages about the man who was in the chair; that sort of behaviour only led to sorcery. Finally, he warned them to help the headman in obeying the instructions of the White people who

[1] Not Kawinga's relative of the same name.

3:Stannus D-5 (ca. 1912) 1922 FT7 Yao FT7

against all evils — witchcraft, attack by lions, etc. The *akwanyi* then set about building shelters in which the *wali* will remain during their term of instruction. According to the number of the *wali* or the number of places where shelters are built may vary from one, two, or three, to as many as eight. Each of these places is called *Ndapula*. They may be many miles apart and are so placed for the convenience of the mothers in various groups of villages who bring the food daily to the group of boys from these villages.

The boys when they originally left the village were wearing a large bark-cloth covering, with beads and collars, which latter articles have been taken by the *m'waisila* and his *akwanyi*. At *Ndapula* they wear simply a loin-cloth of bark.

During their stay at *Ndapula*, the *wali* are given animal names by the *akwanyi* who carry on the instruction of the boys until their return to *Lupunda*, the *m'waisila* having gone back to his village immediately after the circumcision. The names given to the boys are commonly names of beasts of prey such as *Alikula* (*likula* = the jackal), *Achimwi* (*chimwi* = the leopard), etc.

Certain restrictions as to diet are laid upon the *wali* by the *m'waisila*, e.g. no meat of an animal killed by a beast of prey, no *mwalilah*, *kimwalula*. He will not allow any villager to visit *Ndapula* after sunset, i.e. and visitors may only be men who have been through the ceremony. An uncircumcised man is called *mkalula*, one who has not been to his *Unyago*.

Other restrictions as to foodstuffs may be made by the *akwanyi*, generally in connection with the mythical origin of such food substances. A finger-shaped yam called *lyata* is taboo, as it is said to have first sprung from the grave of a leper, the inference being obvious. After the *Unyago*, the boys have to undergo a special doctoring before they may partake of them. Bananas and rice are similarly refused them, the latter on account of a story to the effect that rice grew from the scattle of a dead man, the idea doubtless having relation to the resemblance of rice grains to maggots. Fish is denied them by some members of some *mwalas*, as it is said to have originated from the finger of a woman which she threw away while bathing.

Each *m'waisila* may have special observances of his own. One near Zomba caused all cassava to be roasted in a certain way. Rows of pieces of cassava were placed in split bamboo splits and so roasted before the fire in the manner of fish. If roasted in the ordinary way, the cassava would split and show the white floury material inside, signified by the verb *ku-lapula*. If this is eaten by the *wali*, it is said that the prepuital wound reopens.

The length of time spent at *Ndapula* varies from four weeks to as long as three or four months. In the first place they must wait till the circumcision wounds of all are completely healed. Delay may be occasioned by complications having arisen in some cases. Again, permission to return may be withheld by the *akwanyi* for some reason or other. Should one of the *wali* die at *Ndapula*, the body is buried out in the bush and nothing is said to the parents until after the ceremonies are over and all have returned to the village.

3:Stanner D-5 (ca. 1912) 1922 FT7 Tao FT7

The well then remain for about a month under the care of their guardians, during which time they receive most valuable instruction as to their behavior to others, especially to their elders and to members of the opposite sex. Their faults are brought home to them and many little pieces of advice given. They are taught the household duties which will be their lot thenceforth and they are forewarned of approaching puberty and what it means to them. 881

During this period their child-names are not used and until their new names are assigned to them, they are called after birds and animals, generally some of the smaller animals, e.g. Anyingalowe (nyingalowe = the shrew rat), Alitawala (litawala = a big species of rat), Analyelya (nyelyelya = the shrew). I have been unable to ascertain whether these have any totemistic significance. 551

The girls are usually given a fright to impress on them the danger of lions; one night an imitation of a lion approaching their enclosure is made when all is dark; then all of a sudden one of the elements around with big thorns instead of claws will spring upon one of the girls, generally picking out the worst behaved.

When the term of instruction is completed, they again adjourn to Chiputo for two days where Dwapo is danced on the first night by women, on the second night by men. The first day is spent by a party of men and women in the bush, preparing figures of animals and their dress for the dance. The women wear a small garment of bark-cloth called nsinkapitala, a word which literally means "buttocks of a frog" but which is used with the meaning of trousers and refers in this case to the fact that the bark-cloth is sewn round the upper part of each thigh into a garment like a pair of knickerbockers. Round the abdomen and chest are worn bands made of short pieces of small, decorticated millet stalks; similar bands are worn on the legs and arms, two on each thigh, two on the leg, one at the wrist, below the elbow, and one round the upper arm. In the dark these give the body the appearance of being painted in alternate bands of black and white. They also wear a headdress of the same material. 292 301

On the first evening of the return to Chiputo, this party of women appears after dark; they dance in a row, advancing and retiring in step, swinging their arms and moving their bodies to endamatitsa of Bi-dil Bi-dil. Other women dress up as men, wearing long beards made of lihanga, a kind of lime plant.

The second night, the representations of animals made of grass and bamboo framework supported by men appear, the elephant, the chimpanza, and various antelopes being the common figures, also the zebra made of painted bark cloth. These animal figures are similar to the ungwe or ungwe of the Anyanja and to those of the Awisa,[1] but the zebra is unknown among the Yao. 171

During all these presentations at Chiputo, the well seated on mats are the chief spectators and are duly baptised by the performances of the last two days.

[1] Stanner, 'Some as more tribes of British Central Africa' op. cit., p. 186.

4: Stannus D-5 (ca. 1909)1910 FT7 Yao FT7 Marawi FR4

CIRCUMCISION AND INITIATION CEREMONIES.

Y 304 M [304]

Circumcision was not practised among *Anyanja*. Among *Amangoche*, *Mashinga* and *Yao*, the practice was known as *Isyuge wa lupanda*.

Ku-ambala lupanda:—the prepuce was drawn forward and a stick made on the right side of the median line near the frenum. An application mixed with oil was applied. At the present time the Mohammedan practice is common *Ku-ambala fanda*:—the prepuce is drawn forward through a split piece of bamboo and cut off with a sharp knife.

Circumcision is performed on boys usually at the age of nine to twelve years by a medicine man called *Mpelele*, an honourable calling, in a hut at the Isyuge camp. Both patient and operator stand, unless the former is young, when he sits. The ceremony is witnessed only by the boy's friend. Among Mohammedans clitoridectomy used to be performed by a woman operator (*nakenge*), but, it is said, was discontinued, on account of the heavy mortality, about seven years ago. At the time of the operation a woman was given medicine to make her vomit all unlawful things she might have eaten.

Y 304 981

Initiation ceremonies (including circumcision) take place at irregular intervals. The chief or headman settles the date at which the Isyuge shall be held, generally once a year in July, when there is no work and little else to do. Boys who are considered ready will then take part. The elder brother or a friend of a boy settles whether he is ready for circumcision. The mother then takes a present to the chief. The boys, their friends and the medicine man then depart for the bush, sometimes a couple of miles away from the village. The number may vary from three or four to as many as thirty or forty. In the bush grass huts (= *nsanu*) are erected for their shelter. Food is brought by the mothers and deposited a little way from the camp, and the friends who have accompanied the boys fetch and carry and act as sentinels to prevent approach of any "outsiders." Six months used to be spent in the bush, now four to eight weeks only, and all the circumcision wounds must be healed by the time of the candidates' return. If a boy die, the mother is not informed, she is allowed to bring food each day; at the end when the return is made rejoicing she is told by one of the men.

Y [367]

The exit from the village is accompanied by the friends dancing *Tawgi* or *Mawu*, the boys in old calico (formerly always in bark cloth) walk and sit down on arrival at the place appointed. The circumcision is performed the following day; during the time which follows instruction is given them on their duties in after life as men, in good behaviour in their married life, *re* coitus, eating of food, superstitious regarding salt, etc. When this is all over a message is sent to the village, and the youths, walking quietly dressed in new cloths, are met half-way by the women and girls, who dance and sing; after the return to the village there is drinking and dancing, the newly initiated refraining for one day. At the present time the youth probably has some "friend" of the opposite sex with whom he sleeps; until he has had coitus he may not eat food into which salt has been put. His

Y 551 981 [836]

4: Stannus D-5 (ca. 1909) 1910 FT7 Yao FT7
Bemba FQ5

mother is very careful about this in preparing his food lest he die in consequence. He henceforth bears his man's name, and it is an insult to use his child's name again.

Initiation of girls takes place in much the same way, instruction being given by the old women. After initiation most girls wear a string of big blue beads round the neck. In some cases, where it is not convenient to go far into the bush, a patch of bush near the village may be selected, the approaches are carefully guarded, and pieces of calico on bamboos are used as flags to mark the place.

Nawali ceremony witnessed at Kasanka's village (Awisa tribe) August 30th, 1907:—A girl about fourteen years of age, well developed. Among the Awisa the initiation ceremony takes place when the girl has reached puberty and is ready to be married. Four days are spent by the candidate in a small grass hut built in the middle of the *bwalo* (or village open space), when instruction is given her in all her future duties by a woman who is her "friend," in this case a woman of about twenty-six years of age.

About mid-day of the fourth day she was brought into the *bwalo* wearing old calico round the waist, and with two friends, one on either side, danced a kind of shuffling step backwards and forwards to the time of four drums; it was witnessed by the women of the village, who occasionally joined in the dance. After this she retired, and later in the afternoon reappeared with blue calico from waist as far as knees, white calico tied round waist as a sash, a rope of blue beads round neck and under arms. On the head she wore an erection made of flour and water with a

FIG. 1.

central crest into which were stuck little pieces of reed, lines of red were painted on the white ground as shown in sketch. Always supported by her "friend" or "spouse," she again danced for a few minutes and then departed.

This night about twelve midnight *Ziwere* was to be danced; all the evening and up till midnight a boy went round and round the village calling in a shrill voice warning none to approach. It was a very dark moonless night, and to the beating of seven drums (four small, two medium sized, one big) the *Ziwere* came into the *bwalo*. One was an elephant 8 feet high with a man in each pair of legs—made of grass, trunk and tusks complete; the other, called an *Nawale* (a small antelope) resembled a dwarf jack-in-the-green more than anything else. The elephant pranced, the *Nawale* spun round and round; each was attended by a man with a

6: Mitchell E-5 (1946-1947) 1949 FT7 Yao FT7

121 Often there is some cultural obstruction to the giving of information of certain types. The Yao, for example, will not readily mention the names of deceased persons. Often young children or people who themselves had no children are completely forgotten. Many polygynous men cannot remember the number of children that they have fathered.

114 121 Nevertheless, in spite of these and other similar difficulties, some investigators have been able to publish a certain amount of material bearing on the problem of the rate of increase of non-literate populations in Africa. All of them have been based on samples, though none of these could be considered statistically representative. Such studies in recent years include one in Southern Nigeria,[1] one from Tanganyika[2] based on a substantial sample of women, while M. Fortes has published some material on the Tallensi of the Gold Coast.[3] Schapera, incidentally to a larger study, has published some material on the Tswana of Bechuanaland Protectorate.[4]

The analysis of the Yakö by Enid Charles and C. Daryll Forde was mainly concerned with the calculation of the male net reproduction-rate, while the Culwicks and Schapera calculated female net reproduction-rates. Fortes considered both the male and female net reproduction-rates. The Culwicks have so far presented the most complete analysis of this type of material but were not able to classify their material into five- or ten-year age-groups, though they did use a wider age classification. The Culwicks, Fortes, and Schapera have all used the number of girls born to women now past child-bearing as an estimate of the female gross reproduction-rate. There are objections to this procedure which are outlined below.

121 In this paper an attempt is made to present in more detail some demographic material on an African non-literate people. The main object of the paper is to estimate the probable gross and net reproduction-rates prevailing at the moment 125 in the areas studied. The data on which this paper is based were collected incidentally to a study of the social organization of the Yao people living in the Liwonde District of Nyasaland in Central Africa.[5] In this study a number of typical hamlets, varying from 5 to 50 or more dwellings, were visited and genealogies of the residents recorded. In 20 of these hamlets further details were secured on points of demographic interest. Each census in a village took a day or two, and individual censuses were taken between November 1946 and March 1947. In this analysis of the material I have assumed that the survey was done at the end of 1946. The survey was conducted on a *de facto* and *de jure* basis in that the population who had slept in a hamlet the previous night was enumerated, but the mobility of the population is so high that usually it was necessary to consider a *de jure* count as constituting the true population of the village. The twenty hamlets studied were grouped in three areas, two in the area under N. A. Kawinga and one in N. A. Nyambi's area.

[1] Enid Charles and C. Daryll Forde, 'Notes on Some Population Data from a Southern Nigerian Village', *The Sociological Review*, vol. xxx, no. 1 (April 1938).

[2] A. T. and G. M. Culwick, 'A Study of Population in Ulanga, Tanganyika Territory', *The Sociological Review*, vol. xxx, no. 4 (1938), p. 363, and vol. xxxi (1939), no. 1, p. 23.

[3] M. Fortes, 'A Note on the Fertility among the Tallensi of the Gold Coast', *The Sociological Review*, vol. xxxv, nos. 2-3 (July-Oct. 1943).

[4] I. Schapera, *Migrant Labour and Tribal Life*, London: Oxford University Press (1947), pp. 10 ff.

[5] This study was conducted as part of the Rhodes-Livingstone Institute's comparative study of the social organization of some Central African tribes. I am grateful to the Trustees of the Institute and to the Director, Dr. E. Colson, who have given me permission to publish this material.

181 Amasinings in the Makanjila area of Fort John-
619 ston District, i.e. to the east of the south end of
175 the Lake near Fort Maguire. These two divisions
are insignificant when compared with the other
643 two divisions in Nyasaland. The third division
is the Mangoce Yao now settled around Blantyre,
while the last division, the Macings, are settled
between Fort Johnston district and Zomba.
These divisions arose from a breaking up of the
Yao tribe which originally occupied the territory
between the Rovuma and Lujende Rivers in what
is now Portuguese East Africa. These divisions
are not very significant to-day. Members of a
division recognize that they are more closely
related to each other than to the members of
another division, but this does not appear to
affect modern political life in any way.

619 The first Kawinga, Liwonde and Nkata[1]
175 all belonged to the Macings division which had
settled near the tip of Lake Amaramba where it
● 551 empties into the Lujende River. From this place
643 of origin, the groups associated with these early
leaders moved into Nyasaland. In addition to
belonging to the same division of the Yao tribe
the three leaders mentioned also had the same clan-
name, viz. *andewe*.[2] The term that I have trans-
lated as clan-name is the Yao word *fakeye*,
which may also be translated as "kind" or "sort".
Thus, if one asks a man the "kind" or "sort"
of Yao he is, his answer may refer to the major
divisions as above, i.e. Macings or Mangoce
or it may refer to the clan-name. Clan-names are
inherited matrilineally, but holders of the same
name are unable to trace their descent from
a common ancestor. People with the same clan-
[582] names formerly did not marry but this prohibi-
tion has fallen away. For the commoners the
clan-name seems to have lost most of its signi-
ficance but it is carefully remembered in the royal
lines and lines in which the rank of a village head-
man is passed down.

643 The present Kawinga and the present Liwonde
551 can trace their descent matrilineally from a com-
175

643 551 175 [601]

mon ancestress. The first Kawinga and the first Liwonde were maternal brothers and to this day Kawinga and Liwonde call each other "brother". Nyambi however was a sister's son of an early leader Mkumba who was the father of Nkata, and their clan-name was *amlomi*. Nkata therefore called Nyambi "father".[8] Nkata was the first to move into Nyamland and Mkumba and Nyambi followed afterwards. Later the Nkata name was dropped and an Arabic name Zaroli, corrupted to Jalasi, was substituted. Hence the present Jalasi calls the present Nyambi "father". Kawinga and Liwonde both call Nyambi *alomu*, or brother-in-law, it is said because one of the early Nyambi's married a woman who bore the clan-name of *amlomu*.

643 175 648

The groups under Kawinga and Nkata entered Nyamland and gradually expanded until Jalasi, as he became known, dominated the area around Mount Mangoce in the present Fort Johnston District, and Kawinga, safely ensconced on Mount Chiuta, dominated most of the area north of this point. Jalasi, Kawinga and Liwonde were heavily defeated by British forces in 1895-6 and driven out of British Territory. Later on they were allowed to return after they had been ordered to surrender and effectively disarmed. When they had returned, the chiefs were virtually ignored and so far as can be ascertained the effect of the British government was to destroy the power of the chiefs and substitute the system of British administration for theirs. Nevertheless, it is apparent from entries in the District Book that even though it were not the official policy, the administering officers considered it important that the chiefs should maintain some power. Thus when Kawinga III died in August 1905 the District Book[9] records: "There were two claimants to the succession, Kambombo and Chiwale. Their claims were really very equal and H. M. Commissioner (April 1906) called in Kambombo and the more important headmen and decided the succession by their vote." The

8:Mitchell E-5 (1946-1947) 1949 FT7 Yao FT7
[P.146C]

643
551

[illegible] : The Nyanja [illegible] derived from the Nkhoma line as explained below.
: The [illegible] names of the Yao [illegible] these of these other Central African tribes, appear not to refer to [illegible] objects of everyday life. I should not get a translation of [illegible] and of most other [illegible] names.
" A man calls his father's sister's son [illegible] but then this cross-cousin should in the course [illegible] word to the [illegible] to father's sister, he may also call his cross-cousin "father".

1: Tew E-4 (no date) 1950 FT7 Tao FT7

return to the *lupanda*, where the initiates are welcomed by their friends. An essential part of the ceremony which takes place at this stage is the exhibition of animal shapes made by the *m'mizira*, with mounds of earth outlined in flour. These animal shapes differ from lodge to lodge. On the last night before the return to the village the initiates undergo a ceremonial bathing, each boy being carried to the stream by a woman, who thereafter is addressed as 'elder sister'. Finally, with new names, and freshly oiled and decorated, they march to the chief's village to be redeemed by him from the *m'mizira* with gifts of cloth. After initiation it is a deadly insult to call a boy by his child-name. All who pass through initiation together consider themselves bound by mutual obligations of hospitality.[1]

Girls' initiation takes place in three stages. First, there is *cipute*, the general initiation before puberty, which corresponds to the boys' *lupanda*. It takes place at the same time of year, and though it lasts for less than a week, its conclusion is celebrated at *lupanda* jointly with the conclusion of the boys' initiation. A hut is built in the bush, like the long dormitory of the boys, and four days are spent in dancing and singing. Each girl (aged about eight years) is accompanied by a sponsor, a woman friend who continues to be her mentor during subsequent rites, and who assists in giving the girl instruction in her womanly duties. At the end the girls are bathed and anointed, dressed in new clothes, and each is carried to *lupanda* by her sponsor. Here they prove their skill in dancing and receive gifts from their friends. Ritual defloration follows the *cipute* initiation.[2] Among Mohammedans, clitoridectomy used to be performed by a woman operator, but, it is said, was discontinued in about 1923 on account of the heavy mortality.[3]

After this first general celebration, first pregnancy and first birth are the occasions of separate rites for each girl. According to some informants there were once two ceremonies connected with pregnancy. One, for the young married men whose wives had not yet conceived, used to take place at the same time as *cipute*; each man was attended by a woman sponsor not his wife, given good advice, and put through various tests of manhood. Mitchell does not confirm the present existence of this ceremony, but in the old days if a man was betrothed or married to a child going through her *cipute* he had to accompany her.

The *kitimo* ceremony takes place when a young married woman quickens with child for the first time.[4] The woman, with her sponsor and the married women of the neighbourhood, went out in procession for a ceremony of singing and dancing and instruction to the young couple, followed by a feast. Nowadays no men are allowed to attend *kitimo*. A child born of a woman who had not undergone this rite used to be buried alive; nowadays her *anyone ndumba* is charged by the chief.

Finally, six days after the first child is born, its naming ceremony forms a last initiation rite for its mother. The husband is formally led into her hut by her sponsor and the married women of the neighbourhood, and the child is taken out for the first time to the accompaniment of feasting and dancing.

Most Tao men and women act as sponsors of initiates at least once, and all parti-

[1] Sanders, for boys' initiation: Sanders and Davey, 1923; Warren, 1908, pp. 104-6; Sanderson, A., 1922, pp. 107-8; Shadel, 1923, pp. 12 sq.; Johnston, 1897, p. 400; Weeks, 1, 1909, p. 304.
[2] Sanderson, A., 1922, p. 104. [3] Shadel, 1, 1908, p. 198.
[4] Shadel, A., 1908, p. 104; Shadel, 1923, p. 13, calls it *chimdo* (Sulu).

Pregnancy and childbirth. An event of the first importance in the Tao world is the first conception or rather the "quickening" with the first child, *Lilion*; this is described below, together with the other ceremonies of the *Dagaga*.[1] After the ceremony of *Lilion*, the period of waiting until the birth of the child passes without further event. A point of medical interest is that native women suffer in many cases from "morning sickness" during pregnancy. That they may have perverted appetites is also recognized, grain beads and cowrie being among the things most commonly desired. As the *Anyanja*,[2] the Tao believe that the child develops from the semen of the male, although the growth of the child is in some way connected with the mother.

When labor commences, the woman retires to the bush a few hundred yards away from her house, attended by some friend, seldom a midwife, and never by her own people, though the mother and the mother-in-law will probably be near the spot. If labor is not completed by evening, they return to the house and the birth may take place actually within its walls. The attitude assumed in labor is the same as that adopted by the *Anyanja*,[3] the patient semi-reclining in the arms of another woman who sits behind, grasping her belly. The vulva is smeared with a decoction made from the bark of the *mpoma* tree as a lubricant, but no other help is given. *Kondwi* is the name given to the place of confinement, a hut or house the house where the woman remains for a period after the confinement. The Tao recognize the possibility that a stillbirth, child and cord to the "elegant" (= "[illegible] child" (The elegant, her is broken!)." They wait until the placenta is delivered before dividing the cord. This is done with the sharp edge of the outer covering of a maize stalk or sugar cane; a knife is never used. The section is made near the placenta or half way between it and the child, after tying the proximal end with a bark string.

The woman who receives the child at birth is the *mdwanga*, friend or godmother. If the infant is born in the bush, she carries it back to the house whither they go as soon as labor is completed. The mother herself, unless she is very ill, goes out shortly afterwards and buries the placenta in the ash-heap, using a stick to dig the hole, cover a hoe.

After the birth, the mother and child must remain in the house until the umbilical cord separates, during which time the husband does not enter, though he may come to the door to look in at the child.

The day on which exit from the house is made, the floor is entirely replastered with mud. The baby's head is shaved and a cross is made upon it with *ngoma*, a kind of red pigment. The husband may then receive the child and in the case of a first-born, it is he who gives it its name; other children may be named by the *mdwanga*, the mother, or the maid.

When the mother leaves the house to appear in public, the *mdwanga* who put her (then *ma*) removes it.

So long as the infant remains in the house, care must be taken as to persons allowed to handle it. A woman who has recently had a menstrual period or relies with her husband,

[1] Vide infra, p. [illegible] [2] Sharman, op. cit., p. [illegible] [3] Ibid. [4] Vide infra, p. [illegible]

against all evils — windstorm, attack by foes, etc. The elements then set about building 581
shelters in which the well will remain during their term of instruction. According to the
number of the well as the number of places where shelters are built may vary from one, two,
or three, to as many as eight. Each of these places is called *Ilikpale*. They may be many [34]
miles apart and are so placed for the convenience of the mothers in various groups of villages
who bring the food daily to the group of boys from those villages.

The boys when they originally left the village were wearing a large bark-cloth covering,
with beads and collars, which latter articles have been taken by the *n'wichile* and his as-
sistants. At *Ilikpale* they wear simply a loin-cloth of bark.

During their stay at *Ilikpale*, the well are given animal names by the elements who [553]
carry on the instruction of the boys until their return to *Lapende*, the *n'wichile* having
gone back to his village immediately after the circumcision. The names given to the boys [551]
are commonly names of beasts of prey such as *Alikale* (*Alikale* = the jackal), *Ashiwerik*
(*Ashiwerik* = the leopard), etc.

Certain restrictions as to diet are laid upon the well by the *n'wichile*, e.g. no meat of 88
an animal killed by a beast of prey, no mudfish, *Ilumbale*. He will not allow any villager
the whole *Ilikpale* affair [illegible] and visitors may only be men who have been through the
ceremony. An uninitiated man is called *ubulale*, one who has not been to his *Uyaya*.

Other restrictions as to foodstuffs may be made by the elements, generally in connection
with the mythical origin of such food substances. A finger-shaped yam called *Ipata* is
taboo, as it is said to have first sprung from the grave of a leper, the inference being obvious.
After the *Uyaya*, the boys have to undergo a special dressing before they may partake of
them. Bananas and rice are absolutely refused them, the latter on account of a story to the
effect that rice grew from the scattered of a dead man, the idea doubtless having relation to
the resemblance of rice grains to maggots. Fish is denied them by some members of com- [325]
munities, as it is said to have originated from the diaper of a woman which she threw away
while bathing.

Each *n'wichile* may have special observances of his own. One near Ilemba caused all
manners to be roasted in a certain way. Rows of pieces of manners were placed in split
bamboos split and so roasted before the fire in the manner of fish. If roasted in the ordinary [252]
way, the manners would split and show the white floury material inside, signified by the
n'wichile to *Ingala*. If this is seen by the well, it is said that the prospected wound would respire.

The length of time spent at *Ilikpale* varies from four weeks to as long as three or four 631
months. In the first place they must wait till the circumcision wounds of all are cole-
pletely healed. Delay may be occasioned by complications having arisen in some cases.
Again, permission to return may be withheld by the chief for some reason or other.
Should one of the well die at *Ilikpale*, the body is buried out in the bush and nothing [764]
is said to the parents until after the ceremonies are over and all have returned to the
village.

3:Stanner D-5 (on. 1912) 1952 F77 Yao F77

881 While the *wali* then march solemnly along shaking their wands, the *ambuzu* begin singing:

"Ee *wanaye* *ambiwe*"
"To the gate they have shut!"

[53] [534] to which the *wali* reply:

"*Ewowo* *kwakupita*"
"There is no place where to pass!"

The *m'wisikile* remains at *Lupanda* till everyone else has left; he then sets fire to the shelters and leaving without looking back, runs to overtake the procession and then leads it on towards the village still at a slow pace, while all around is a yelling crowd of delighted mothers and other relatives and the *ambuzu* and drummers, all singing and dancing.

When the outskirts of the village are reached, the *m'wisikile* halts and waits for the *chief* to come out and give them permission to enter. The *chief* brings *mlimo* which unrolled on the ground measures the length of the procession of *wali*. Headed now by their leader, the *wali* walk over this *mlimo*, while the *ambuzu* roll it up behind them for the *m'wisikile*, as it is part of his payment. Flour may be brought him at the same time, carried by the *chief's* wives.

At an *Unyago* I witnessed at *Kwimwanat'a*, the halt was called on the brink of a stream at the edge of the village where a bamboo arch had been erected. The arrival of Chief *Malenya* at this point with *mlimo* and flour was the sign for a demonstration by his young men who ran forward as if in battle, firing off blank rounds from old Tower muskets and executing a kind of war dance.

After the *mlimo* has been handed over, the *chief* returns to his *kraal* and the procession continues into the village, across the village open space to the huts round the *chief's* house. There, the *wali* enter by a gateway and disperse over the courtyard where they find [771] their sleeping-mats laid out ready for them by their mothers. The *m'wisikile* lays his "tail" on the leader's mat to bring good luck thereafterwards. With *Mlomale*, there is no further part for the *wali*, but in some cases they are called upon by the *chief* to give an exhibition of their dancing and drumming. The *wali* sleep that night in the *kraal* and disperse the following day.

In the morning, the *m'wisikile* takes his "tail" and a stirring stick made from a *mlimo* stalk with the roots on it, and strikes the ground at points in a row in front of the *chief's* house. Here the pots of beer which have been prepared are placed in rows, those shown [273] by the *chief* and those shown by the *m'wisikile*, and drinking commences. The *m'wisikile*, before he joins in, takes the *wali* to an *ash-heap* in the village and there sprinkles them with medicine from a grain-mortar after which they go with their shamed behind a house and [574] change into new clothes. They then go and salute the *chief* by clapping their hands and depart to their villages, duly initiated and somewhat subdued by what they have been through. Their new names as "*nsoy*" may be given them by the shamed *ulilwe* at *Lupanda* [553] or after the return to the village.

believe that she will die. The man's representatives are therefore able to establish the child's paternity from the birth-pang confessions of the woman.

The child is kept in the hut where it was born, for six or seven days, while the umbilical cord dries and falls off. During this time (but) the child is unnamed, and it is named only when it is taken out of the hut. Should it die during this period of seclusion it remains unnamed and is referred to by a special term (*ilopo*, pl. *matopo*). I have therefore been able to enumerate live births by means of the distinction made between miscarriages and still-births (*kwanga*) and children who lived long enough to be referred to as *matopo*. After the birth of the child the woman may not have intercourse for four or five months. To do so would be to endanger the life of the child with a disease called *mdoka*,* which is contracted by a sexually inactive person when he comes into contact with a sexually active person. The husband may have intercourse with a second wife, but must take care to medicate himself so that he does not endanger the life of his child. When the child is about 4 or 5 months of age the parents perform ritual intercourse and medicate the child against the mystical dangers of sexual activity; sexual relations are then resumed.

The Yao say that a second child should not be born while the first is still being suckled. Since lactation continues for about two years I am uncertain whether monogynists remain continent, as they say they do, or whether *coitus interruptus* is practised. It is quite usual for husbands to become labour migrants when their children are still very young. I have known women to write to their husbands who are away working and tell them to return because their children have 'grown', i.e. have been weaned. Labour recruiters had difficulty in recruiting men immediately after the soldiers had been demobilized at the end of the war, because the women objected, saying that they had remained childless long enough and the men must first wait until children were born. However, actual examination of birth-dates shows that children are sometimes born within a year of one another and sometimes there are quite big gaps. The two-year gap between children is probably an ideal which few attain.

5. The Estimation of Fertility

(a) *Sundberg's Age Divisions*

As a preliminary estimate of fertility, Sundberg's trichotomy of ages may be considered. The argument behind this division of the population into Youth, Middle Age, and Old Age is that those populations with a high proportion of youth have a greater tendency to increase. Table V shows this trichotomy for the Yao with the same material for some other populations shown for comparison. Where the gross reproduction-rate is known for the period shown in the table, this is included.

At any one time a certain proportion of the population is absent from the area, usually at some labour centre. Hence the proportions of the population are distributed abnormally. In all there appeared to be a total of sixty-three men, women, and children absent from the hamlets, who would otherwise have been living there. Hence in Table V these have been included in the totals in the 'Yao with absentees' proportions.

* A disease of this sort is believed to by many Central African tribes. Among the Nyanja-speaking peoples it is known as *ciwalo*.

1: Tew E-4 (no date) 1950 FT7 Yao FT7

appointed also in the question by the marriage witness. The couple are referred to 585
elder disputes to the matter, and to consult the diviner in case of sickness.[1] After the
rite these two matrons have special responsibilities towards the couple; grievances
are referred to them, and they must be present when adultery cases are heard in
court. If the marriage witness ceremony has not been performed, the relationship is
not regarded as legal and no adultery compensation can be claimed by the husband.

Divorce used to be a private affair, which was merely signalled by one party giving 586
to the other an arrow as a token of separation.[2] Nowadays all divorce cases go to court.
The woman is usually asked to choose between her husband and the adulterer, and
the compensation paid to the former, if she decides to leave him, is higher—amounting
to about ten. A man can be sent away from the village by his wife's kin, but if he
has given no grounds for divorce he can claim compensation and will also take back
any gifts made to his wife. A few small gifts to his mother-in-law are not reclaimed.
Divorces are easily obtained and frequent. Grounds for the divorce of a man may
include failure to pay hut tax, one of the specific duties of the husband.

The custom of making a marriage payment is recorded by Johnston[3] (on the east 583
coast of Lake Nyasa) as a relatively new adoption. When given it is divided between 177
the bride's father, mother, and mother's brother and brother.[4]

Slavery

Domestic slavery was an important institution in the Yao social system. Slaves were 587
obtained by capture, purchase, or in compensation for injury.[5] A man would pay a
debt by giving slaves (wives or members of his matrilineal kin group) to his creditors.[6]
A man might voluntarily enslave himself to a man having charge of many women, as
a means of obtaining a wife.[7] The children of a free man and a slave woman were not
emancipated, as their father could not take them from the village of their mother's
master, who had the right to sell them.[8] Slaves took part in the ordinary life of the
village; women slaves ranked as junior wives of their masters and shared the usual
work of women. Men might be supplied with guns for hunting or might accompany
their masters to war, trade for them, spin, weave, sew, make baskets.[9] The institution
of domestic slavery was an expression of a dominant motif in Yao culture—the association 589
of status with a large number of dependents. Its abolition by the British was in
itself a major blow to the prestige and authority of the chiefs.

Information about the social organization of the Yao in Portuguese East Africa is 184
scanty, but it is in agreement with what is known of the Nyasaland Yao; Heckel, who 602
knew the Yao in Lindi district, Tanganyika Territory, confirms the correctness of
Stannus's account of the South Nyasa Yao.

The Yao came into Nyasaland in small parties of kinsmen. Their experience and 175
their superior weapons were enabled them to dominate the Nyanja among whom they
settled, and today they dominate the population of the Southern Province. They are
organized into loose groups of villages, under petty, independent chiefs. They were

[1] Stannus, a, 1910, p. 242; Hynde, 1899; Johnston, j, 1902, pp. 891-2; Macdonald, 1882, vol. 1, p. 1[illegible]; Werner, 1906, pp. 190-91.
[2] 1910, pp. 191-2.
[3] Johnston, j, 1902, p. 1[illegible]
[4] Stannus, a, 1910, p. 1[illegible]
[5] Werner, 1906, pp. 191-2; Stannus, a, 1910, p. 1[illegible]
[6] Stigand, 1910, p. 1[illegible] (see also a reliable source).
[7] Macdonald, 1882, vol. 1, pp. 1[illegible]-7.
[8] Werner, 1906, p. 1[illegible]
[9] Ibid.

1: Tew E-4 (no date) 1950 FT7 Tao FT7

never to have had any large-scale central political organization, and their history is full of occasions when one group of Yao has attacked another. Even within his own area the authority of the chief was not, apparently, sufficiently strong to prevent one village breakaway from raiding his neighbours; the chief maintained no standing army.[1] The chief held certain rights and privileges. He was entitled to the ground tusk of any elephant found in his territory (the finder was rewarded after it had been sold, with a cloth); he received tribute in food,[2] with which he entertained visitors. He took a share of the spoils of war and was also entitled to annual labour service and to a gift when he made a new burial place. Apart from his military and judicial responsibilities, he had authority to settle when and where initiation ceremonies should be held.[3] The right to hold these ceremonies was sought after by the village headmen as a mark of honour.[4] The chiefs or headmen of certain families had the right to wear a white cloth bound round their temples as insignia of rank.[5]

In addition the chief had a certain ritual status. He was thought to incur mystical danger by contact with death, and so was not allowed to attend a funeral nor to eat a chicken brought by a messenger announcing a death, nor to accompany his military expeditions. He was supposed to have great power through special medicines. He had to make offerings to the ancestors, especially in affairs concerning the whole people, such as drought or epidemic. He was expected to give a burial cloth at the death of an important man. At his death a period of social disorganization was recognized, members of his village were allowed to pillage and rape, until he was buried.

Succession to the chiefly office was matrilineal. The chief's position was based partly on his status as the senior male of his own matrilineal kin group, partly on his wealth. His command over slaves, guns, and carriers to the coast was greater than that of others, and from these his military strength was derived, for a chief was powerless without his following of dependants. The chief of the area was also headman of his own village. In fact, the position and duties of a village headman (except that he could not exact tribute)[6] reproduced in small scale those of the chief. The headmen also were in mystical danger through contact with death and were the channel through which the ancestors were approached in affairs concerning the village. They, too, built up their prestige and wealth by slaving activities. They seem to have been largely independent of the chief, carrying on slave raids of their own, and if they could gain a sufficient following, they might break away from the chief, and set up their own chieftaincy.[7]

The chief ruled through a hierarchy of headmen. His councillors were superior headmen, placed over a number of village headmen. Commoners could approach the chief only through the councillor in whose area their village belonged. The councillor's special duties were to report daily to the chief on the affairs of his district, to advise, and to adjudicate in the chief's own domestic affairs, e.g. in conflicts between the chief and his brothers and nephews. The councillors were not necessarily relatives of the chief,[8] but were chosen on account of their general status in the community, and their

[1] Cheadle, a, chap. x: 'one, man of the Yao in the Shire highlands: "Every tribe was one over which he set down as a chief . . . petty quarrels of petty chiefs were abundant . . ." ' See Mackenzie, ciiiy, vol. i, pp. 184 and 192.
[2] Stannus, a, 1910, says that only here was meat in this.
[3] Hall, a, 1906.
[4] Hall, 1905, p. 272.
[5] Mackenzie, ciiiy, vol. i, p. 18; Werner, 1906, p. 260.
[6] Mackenzie, ciiiy, vol. i, p. 192.
[7] Hetz, pp. 30 and 138.
[8] Hetz, p. 138.

1: Tew E-4 (no date) 1950 FT7 Tao FT7

Birth

Birth takes place in the bush, some distance from the hamlet, in the presence of female relatives of the woman and of her husband. If the child is stillborn, or miscarried, it is buried in the bush. The husband and wife must abstain from sexual intercourse for some months, until a special ritual intercourse is performed. A man who breaks this taboo is liable to contract a fatal disease, *kamanaya*. Difficult births are attributed to: (a) a curse spoken by a sacrificial relative—this is made effective by the intervention of the ancestors, and to remove it it is necessary to perform a rite making clear that no malice is borne; (b) the adultery of the woman or her husband, in which case confession will save the woman from dying; and (c) sorcery.

If a child is born alive it is brought to the hut of the mother or one of her female relatives, where it is secluded until its naming ceremony, about six days later. Only after the naming is the child considered to be a member of society. A second child should not be born while the first is still suckling, i.e. for about two years. When the child is about four or five months old it is ritually immunized against the dangers of sexual activity, and the parents may resume relations. Elaborate magical precautions are taken to ensure the child's survival. Children sleep with their mother, the boys until they are old enough to go to the boys' dormitory, and the girls until marriage.[1]

Initiation

The yearly initiation ceremonies, *unyago*, are the principal cultural institution of the Yao. That for the boys, *lipondo*, is the more important, and may only take place under a chief or superior village headman, whereas a girls' initiation ceremony may take place under an ordinary headman. The right to hold a boys' initiation ceremony therefore becomes a mark of status which is jealously disputed.[2] The right is expressed as 'having a *ciuli*'. A *ciuli* is the small basket in which the special sacrificial flour is carried.

Yao carry out initiation between the ages of seven and eleven, whereas generally in East Africa it is postponed until puberty.[3] In response to requests from the headmen the chief appoints the time and place of the boys' initiation ceremony for a group of villages. It is held at the end of the dry season, before the bush is burned. Each initiate is accompanied by a sponsor, *alumwai*, who may be a brother, uncle, or friend. Before they set out for the place appointed to be *lipondo*, they all assemble before the chief to be anointed with sulfur-flour specially prepared by his head wife. The word *lipondo* refers to a forked stick over which the sacrificial flour is poured. This stick is placed at the place of assembly, the *mandwa*. The boys, their sponsors, and the master of ceremonies, *ni'mwiru*, are accompanied with dancing so far as *mandwa* by their friends. The next day the initiates go to a spot in the bush, where the circumcision (formerly only an incision) is performed, and remain in the bush school, *uligula*, for about two months, until the wounds are completely healed. The Yao circumcision rite is said not to have been introduced by the Arabs.[4]

During these weeks the boys are subjected to rigorous discipline and instructed in various skills and tribal lore. They sleep in long dormitory huts, with partitions dividing the boys of different villages from each other. The chief appoints the day for

[1] Shorter, op. cit., p. 9.
[2] Shorter and Doyle, op. cit., p. 110.
[3] Hall, op. cit., p. 110.
[4] Livingstone, op. cit., p. 6.

2: Mitchell E-5 (1946-1949) 1956 FT7 Yao FT7

175 622 641 643 whatsoever. But a man often decamps by night taking with him many slaves belonging to his fellow-citizens; he then goes to some influential chief who may be only too glad to give the fugitive ground and to establish him as a sub-chief. Freemen who thus leave are deemed by their former chief, who welcomes every opportunity of shooting or capturing them.[1]

175 594 622 643 648 In this way village headmen, by increasing their following, increased their power against the chief. MacDonald records:

> When a person has acquired several villages, he becomes a higher headman, intermediate between the chief and the owner of a single village. Each headman lives in the village he likes best, and leaves his 'brothers' to manage his other villages. But a headman of great ambition often places his 'brothers' all around him, decides their cases, and practically governs a small kingdom of his own. If he lives far from his chief, one might suppose that he was quite independent. When a quarrel arises between the chief of the country and an important headman, the latter may rebel, and found a new kingdom, thus depriving the old chief perhaps of one-third of the villages in his dominion.[2]

MacDonald cites the case of Mkanda of Chiwalulu, who was at first a headman of Kubtpuma's but rebelled, and went to live on the southern side of the mountain.[3] He also observes that on the other hand, 'a headman may keep up his chief's authority in a district that the latter could not otherwise hold'.[4] Elsewhere he says:

> In and around his own village the chief of the country is a terrible power, and his government is supported by the most prompt and severe punishments. But in distant parts of his dominions, where influential headmen live, he may be little known, although as a matter of theory he is supposed to settle all graver disputes even in remote villages.[5]

175 643 The history of the Yao chieftaincies in MacDonald's time, and as told to me by my informants, is that of constant division into independent chieftaincies. In the Zulu and Bemba polities a strong state structure included a pattern of civil war and the main-

[1] MacDonald, *Africana*, i. 127-8.
[2] MacDonald, *Africana*, i. 32.
[3] MacDonald, *Africana*, i. 155.
[4] MacDonald, *Africana*, i. 156-7.
[5] MacDonald, *Africana*, i. 154-5.

2: Mitchell E-5 (1946-1949) 1956 FT7 Yao FT7

crop failures. Also I was told that important village headmen are buried with their heads pointing to the east.

The Yao concept of the past is reflected in the principles of political organization of these Machinga chiefdoms. The invasion is the datum point from which rank mainly stems. We may classify modern headmen into: those who were in the area before the Yao invasion, i.e. the Aborigines; the Invaders; and those who have come in since the invasion and have had to submit themselves to the Machinga chief, i.e. the Newcomers. The principle behind this classification of headmen is fundamental to Yao political structure. Stated most simply it is the rule that MacDonald quoted in describing the development of local organization: 'However large the settlement may become the man that is first in is the chief or headman.'[1] This is, of course, somewhat of a simplification, but the rule contains the essence of the principle. It was reversed for the Aboriginal Nyanja because the Yao subjugated them. But the claims of the Nyanja chiefs to rank because they had occupied the land first were recognized by the Yao who absorbed them into the social structure in positions of high rank.

But the principle holds among the Yao themselves, and for the Ngoni in their movements after the White conquest. The operation of the principle is clearest in the structure of small local areas such as Chiwalo's. When Chiwalo's area was first settled, just after World War I, there were large tracts of unoccupied land. The first headmen to move into this region were Cigwaja, Kapakoma, Nyanja, Makata and Mumbwa. The local chief Chiwalo followed Cigwaja, but as Cigwaja was one of the Invader headmen under Chiwalo during the period of invasion, he now recognized Chiwalo as the chief. The area that is now Chiwalo's chiefdom was divided out among these five headmen. As other headmen came into the area they had to approach one of these five for land rights. These, when granted, were granted irrevocably in a block to the new village headman who then had sole rights to distribute the land afterwards. If he had the land to spare, he may have granted a portion of it to yet another village headman, and this action was also irrevocable. The land occupation pattern in any particular area is therefore extremely complex, because in addition to the village garden areas, indivi-

[1] MacDonald, *Africana*, i, 147. See p. 23 above.

2: Mitchell E-5 (1946-1949) 1956 FT7 Yao FT7

dials may hold garden plots in other village areas which they have temporarily borrowed in a private arrangement with the individual owner. But when the system is seen in relation to the pattern of occupation of the area, it is greatly simplified. Each garden may be traced back to the original owner through three or four village headmen. The pattern of the reversion of rights follows the same system. The garden land of a village which has recently moved in and is moving out again reverts directly to the village headman who granted it. If he has moved out it reverts back to the village headman from whom it was in turn acquired.[1] These original landholders form the central points of locally organized areas to-day. For example, in Chiwalo's area there is Chiwalo at the top of the scale, then there are Kapalema, Cigwija, Mumbwa, Makata and Nyanje as the most important village headmen, and they take precedence over any of the other village headmen. All the others who have come into the area since then, of whom many are Ngoni, rank very much lower.

From the smallest village to the chiefdom as a whole, therefore, there is a series of overlapping areas of organization. In any particular area chosen at random in a chiefdom as large as, say, Kawinga's, there will probably be two or three small villages which recognize the primacy of one of their number. The headman of this village may be called in to arbitrate in disputes over land or personal quarrels or even in the private consultations held after the death of a village member (*mapete*). But the superior headman in turn recognizes *his* superior who was in the area before him. This system is extended over larger and larger areas, each headman in turn recognizing some other headman who was in the area before him, until ultimately the primacy of the invader chief over all his headmen is established by the same principle. There is no clear-cut district organization as among the Zulu and Bemba.[2]

[1] See also "Preliminary Notes on Land Tenure and Agriculture among the Machinga Yao", *Human Problems*, 2 (1950), 1–13. This system of land-holding has been called "secure of holding" by Gluckman. See his *Essays on Lozi Land and Royal Property*, Rhodes-Livingstone Paper, No. 10 (Livingstone, 1943), p. 19 ff.

[2] See the essays by Gluckman and Richards in Fortes, M., and Evans-Pritchard, E. E., *African Political Systems*, Oxford University Press for the International African Institute (London, 1940).

2: Mitchell E-5 (1946-1949) 1956 FT7 Yao FT7

These headmen who are the centres of local social structure are the higher headmen that MacDonald mentions.[1] Many of them to-day are the descendants of the traditional councillors (*ndona*) who were sent out to the extremities of the chiefdoms to be the outer governors in these areas.[2] Their villages are social centres in that many disputes are taken to these important headmen before they are taken to the Native Authority's court. For example, the dispute between the women of Nampeya and Cikuwira was taken to Ntilwilibwi.[3] The chief usually orders headmen to assemble at the villages of important headmen when he has directions to issue to them. Very frequently the Administrative officers camp there for the night on their tours and call the headmen in to them for conference. The placing of mosques at the villages of these important headmen also indicates their significance as social centres. Most Moslem villages have small mosques which the more devout use for the morning and evening prayers during Ramadan only. At the villages of important headmen larger mosques have been built and these are used for the midday prayers on Fridays (*jumu*), when most of the Moslems in each area assemble in their best clothes for communal prayers. Large brick mosques have been built at the court villages of Jalasi, Liwonde and Kawinga. There are other large mosques at the villages of chiefdoms such as Chiwalo, Chambo, Mpeta, and of important headmen such as Kangombo, Nyonje and many others. These chiefs and headmen were all lowaders and are, as I shall show later, almost by definition Moslems. They are also headmen of high rank so that the placing of the mosque, and the other features of local social structure, are largely derivatives of the system of ranking.

Rank therefore underlies the structure of local areas as well as the structure of the chiefdoms as whole. It is, as I show later, closely associated with the historical origin of the headmen. Yet the correlation is not perfect and I shall show that other factors tend to militate against the fixed historical ranking of headmen. Nevertheless, the principle of primacy is the most important single factor.

[1] See Chap. II, p. 56.
[2] See Chap. IV, pp. 90-5.
[3] See Chap. V, p. 130.

2: Mitchell E-5 (1946-1949) 1956 FT7 Yao FT7

their councillors at the courts. If they were relatives of the chief it is almost certain that he would have mentioned them. We may assume then that the true proportion of unrelated headmen among the Newcomers is, as we would expect, very much greater than among the Invaders. 622 643

Of the total of 424 Administrative villages there were ten in which I did not record the formal relationship to the chief. In Table IX I set out the proportions in these categories among the Administrative village headmen, and there is no radical difference between these proportions and those for all village headmen. 622 643 602

TABLE IX

PROPORTIONS OF RELATIVES AND NON-RELATIVES AMONG ADMINISTRATIVE HEADMEN*

	Chief's Relatives						Non-Relatives	Total
	Direct			Clan				
	Mat.	Pat.	Aff.	Mat.	Pat.	Aff.		
Invaders . .	18 (13·0)	23 (16·6)	6 (4·3)	24 (17·4)	12 (8·7)	9 (6·5)	46 (33·1)	138 (99·7%)
Newcomers .	6 (2·6)	8 (3·5)	12 (5·3)	40 (17·8)	22 (9·8)	18 (8·0)	95 (42·1)	225† (100·1%)
Total . .	38	31	18	64	34	27	141	363

$\alpha = 6$; $\phi = 30{\cdot}1$; $p = 0{\cdot}0001$.

* This table includes the 10 Aboriginals.

† Excludes 10 villages for which I have not recorded this information.

To summarize, we may characterize the Invaders as Yao, Moslems, and members of their chiefs by historical connections and kinship ties. The Newcomers and the Aboriginals on the other hand are of different tribes. They have more diverse religions, are not connected to the chiefs by kinship ties as closely as the Invaders are, and do not share with them the strong bond of being co-Invaders. It is in the struggle for prestige and rank that these bonds with the chiefs assume significance. 622 643 602 553 554

2: Mitchell E-5 (1946-1949) 1956 FT7 Yao FT7

CHAPTER IV

PRESTIGE AND RANK AMONG THE VILLAGE HEADMEN

The Political Process as the Struggle of Headmen for Rank

622
S59

THUS far I have been describing the composition of the three categories of headmen: the Aborigines, the Invaders and the Newcomers. This classification is fundamental to the system of ranking among them, and is the most important single factor. But rank among village headmen is determined by other factors as well. We may summarize the most important of these thus:

A. *Rank from association with the chief.*
   1. Accompanied the chief during the Invasion.
   2. Kinship with the chief.
B. *Rank from opposition to the chief.*
   1. Prestige from another area.
   2. Large following.

The struggle of the headmen for power and prestige, both among themselves and against the chief, constitutes the political process. This is expressed mainly in the competition for various symbols of prestige. In this process, village headmen may use whatever connection with the chief they can, in order to gain his favour. They may use their direct kinship or clanship with him, or some more nebulous connection, such as the friendship of their fathers with him, or they may play upon the history of the association of their village with his ancestors in the invasion of the country. If they cannot exploit some link with the chief in their struggle for prestige, they may press their claims on the basis that their villages are large, and that if they are frustrated they may move their allegiance to another chief.

The historical fact of being of Invader stock is clearly a major determinant of rank. Invaders always have the advantage over the Newcomers because of their historical association with the chief. They are more closely bound to him: they participate

2: Mitchell E-5 (1946-1949) 1956 FT7 Yao FT7

in the ritual of the chieftaincy more than Newcomers do; provide the chief's councillors; pay rain-levies and in other ways express their closer tie with him. But there is no rigid class structure based on tradition. All villages are liable to break up. If for any reason the village's internal cohesion begins to weaken, its members scatter and it disappears as a political entity. Invader as well as Newcomer villages may thus disintegrate. The smaller sections of an invader village which now set up villages of their own have to compete with the larger and more united villages of Newcomer origin. Another facet of the political process, therefore, is the continual competition of village headmen who are trying to maintain the unity of the villages under them, and to increase their following, so that their power against the chief and the other village headmen may be enhanced. 622 559

Marks of Rank

In the vernacular it is the *name* of the village which is said to be important.[1] This name is usually taken from the founder of the village and is assumed by a new village headman when he succeeds to the position: when a new village is founded the headman gives it his name to distinguish it from the parent village. But the importance that is ascribed to a name is clearly the importance of the corporate group which it represents. The headman is an incumbent of a social status, the prestige of which is drawn from the corporate group which he represents in his public dealings. 103 622 559

The prestige of village headmen is shown particularly in the degree of deference accorded to them by other village headmen. The headman with the highest prestige is of course the chief: the original leader of the Invaders. Below him may be ranked the rest of the village headmen in a relatively fixed pyramidal hierarchy, determined by a number of factors which I shall outline later. 559 622 643

The dress of important headmen is often an indicator of prestige but this criterion is not infallible nowadays when labour migrants, craftsmen and tobacco growers can afford to buy better clothes than many headmen. But it is usually a fairly safe guess that when a man carries a long stick and is dressed in long flowing 292 559 622

[1] *Lina lya Indungwa*—lit. "the name is great".

2: Mitchell E-5 (1946-1949) 1956 FT7 Yao FT7

robes (a gown not unlike a woman's dressing-gown), wears a bright-coloured turban, and has one or two men walking behind him, he is a rather important village headman. One particular item of clothing in the Kawinga, Liwonde and Nyambi areas, is the scarlet headband which some village headmen may wear. I shall discuss this later in the context of the competition of village headmen for rank.

Another external characteristic of rank, which seems to have disappeared with the changing economic structure of Nyasaland, was the carrying of knives (*mbejo*) by important village headmen. Previously, status was indicated by the type and size of knife carried in public. The chief usually carried the largest and most ornate. The knife taken from Kawinga on his surrender in Portuguese East Africa was about 18 inches long and had a decorated ivory handle. Smaller knives of similar pattern belonged to his headmen.[1] Nowadays, many young commoners carry knives two or even three feet long, made from the broken blades of motor-car springs.

The right of important village headmen to build fences[2] at the back of their huts is also a mark of prestige which seems to have lost its significance. About 50 years ago only important headmen had the right to erect a fence at the back of their huts. This fence, made of tall grass about six feet high, enclosed the grain stores and other food supplies of the household and formed a private compound in which the headman's wife and slaves carried on their daily tasks.[3] It seems likely that private compounds and slavery were positively associated, so that only the important village headmen who had many slaves found it necessary to build fences. All chiefs and most important headmen to-day still erect these fences. Those who hold initiation rights are obliged to build them because, when the initiands return from the seclusion phase of the initiation ceremony, they are supposed to spend one night in the headman's private compound before going back to their villages. But nowadays, minor village headmen and commoners also frequently build these

[1] See fn. 4, Chap. II, p. 38.

[2] *Lamula*, pl. *malamula*. The enclosed space or 'compound' is *chalamula*. Typical hut compounds are depicted on Plate IX (*a*) and (*b*), facing p. 108.

[3] MacDonald suggests that the common term *bwanu* for woman is derived from the *ubwanu bwapa*—on the other side (of the fence).

2: Mitchell E-5 (1946-1949) 1956 FT7 Yao FT7

compounds, especially in areas where there are man-eating lions,[1] so that it is no longer an infallible indicator of the hut-owner's rank.

Minor village headmen always allow their superiors to sit on a chair. If village headmen of commensurate status are present, chairs may be sought for them all. But a minor village headman never occupies a chair, even if one is available, in the presence of his superior. At a meeting, for example, a chief occupies a chair and so may his most important *ndona* or councillor. The more important headmen sit alone on separate mats, for a man only shares a mat with his equals, and then only rarely. Junior headmen, however many there are, have to try to squeeze themselves on to one mat or squat on the ground.

Important headmen also have the right of walking in front of their juniors. If there are three or four headmen returning from, say, a court case, they arrange themselves in the pathway in an order which reflects their rank. As they file down the narrow field path the leader is the most senior among the group. After him come the other headmen and last of all the commoners. This order of precedence is also followed when initiands pass through the tribal initiation ceremonies. The sisters' sons and other matrilineal descendants of important headmen precede those of the less important headmen. At Chiwaulo's hut also, I have noticed that the more important headmen sit under the verandah while listening to private cases. The less important headmen sit with the commoners under a shelter or out in the sun.

I have been discussing the visible marks of prestige. But high rank also tends to carry with it some other privileges which are not immediately observable. The most obvious is Government recognition. I have already mentioned that under the 1912 Ordinance, village headmen were recognized by the Administration. These Administrative village headmen, who had certain duties to perform, were paid a small salary and were in earlier days given a "book" in which the tax payments could be recorded. To-day, the Yao still describe Government recognition as "having a book". Administrative village headmen derived more benefit from Government recognition than merely an

[1] The lions in Plate IX (*a*) and (*b*) are in Nsanowa area where there are man-eating lions. Most huts have compounds. A large proportion of huts in areas where there are no lions also have compounds.

2: Mitchell E-5 (1946-1949) 1956 FT7 Yao FT7

(22, 559, 69) ancestry. This recognition publicly announced their superior status, because not all headmen could be Administrative headmen. We do not know exactly how the Administrative headmen were appointed when the Ordinance was introduced. The observable results, however, are that no headman, so far as I am aware, who was of superior status in the indigenous ranking system, is not an Administrative headman to-day. Being an Administrative headman is then in itself an indicator of rank.

(22, 559, 69, 95, 71, 88) Rather more important than this is the right to hold initiation ceremonies. MacDonald says that these rights were held by the chief only, but it is not clear whether the word "chief" used here refers to the village headman or the "chief of the land". Nowadays, the rights are held by village headmen as well as the chief. The right to hold initiation ceremonies is signified by the possession of a small flat basket (*ziele*) in which the ceremonial flour for the ceremonies is carried. When a chief grants a *ziele* or ceremonial basket to a village headman, what in fact he does is to grant him permission to approach the spirits of his ancestors. The headman uses the basket on three occasions during the initiation ceremonies. First, before the ceremony is announced he pours a little cone of sorghum meal at the root of a special tree in or near the village. This tree is known as the *mala*, or the divine-tree where all offerings to the ancestors are made. While he works the flour through his fingers to allow it to fall in a cone, he calls on his ancestral spirits and asks them to intercede on his behalf with the spirits of the chief's ancestors. He then formally requests permission to hold the initiation ceremony. This cone is left intact through the night. Should it collapse the interpretation is that the spirits are not willing that the ceremony should take place and it is postponed for some days. Offerings are made until eventually the cone, by remaining intact through the night, indicates that all is propitious for the ceremony to be conducted. The second occasion when the ceremonial (22, 559, 69, 95, 81) basket is used is when the village headman or chief goes down to the grass shade where the rites of segregation and aggregation take place. Here he pours flour over a twig and begs the safe conduct of the initiands through this physically and mystically dangerous period. Third, each individual initiand, and his or her mother, is touched on the forehead and forearm with the flour on the evening that the initiands leave for the grass shade. During

2: Mitchell E-5 (1946-1949) 1956 FT7 Yao FT7

the last rite the owner of the oblational basket exacts a payment of threepence or so from each parent. The headman does gain financially from the initiation ceremony, but it would be wrong to imagine that this is the only reason why he should want to have the right to hold it. The competition for the rights, which are limited to a few, is part of the general political process whereby village headmen compete for privileges and advantages over their fellows.

Village headmen may hold either the boys' or the girls' initiation ceremonies, or both. Sometimes, when they hold both, they delegate the girls' ceremony to a younger brother or some other relative without referring to the chief. For example, Kawinga's clan relative and important retainer, Ngalawanga, had the rights to both initiation ceremonies, and he allowed his perpetual 'son' Isa' to hold the girls'. Also in Nyambi area, Mpaja, who had both initiation rights, allowed his perpetual 'son' Nantanga to have the girls' ceremony. It is generally conceded that the right to hold the boys' initiation ceremonies is more valuable than the right to hold the girls'. H. L. Duff, writing in 1906, had also noticed this when he wrote:

> The respective ceremonies seem to be considered as on a somewhat different footing, for the boys' *isyapo* can properly be held only in the village and under the patronage of, so to say, the paramount chief of the neighbourhood, whereas the girls' initiation may take place under the auspices of an inferior headman. This distinction is still jealously observed and any breach of the chief's privileges is apt to lead to bitter dispute.[2]

The sanction the chief holds over the headmen in this respect is mystical. A village headman believes that the initiation will be a success (that is, that the initiands will be free from the harm of wild beasts and illness, or the circumcision wounds of the boys will heal quickly and well), only if the approval of the chief's ancestors is obtained. He cannot hold the initiation ceremonies, unless he has obtained the basket from the chief.

Most people still follow tribal initiation customs, but in the extremes of the area in which I worked, religious ideas are bringing about a change. In the north in Jalasi's area where Islam

[1] The first his was the son of Ngalawanga and this relationship is preserved by the modern incumbents of the headmanship. See Chap. V, p. 110.

[2] Duff, H. L., *Nyasaland under the Foreign Office* (London, 1906), 310.

2: Mitchell E-5 (1946-1949) 1956 FT7 Yao FT7

961 178 795 633 594 is most powerful, there is a tendency for the Islamic initiation ceremony for boys, *jando*, and the Islamic initiation ceremony for girls, *unyago*, to displace the tribal equivalents, *lupande* and *ciputu*. These Moslem initiations are conducted by Moslem teachers (*mwalimu*) and are not controlled by the chief. Though it also involves the circumcision of the boys, *jando* is very much shorter and the boys are secluded for only a week. Some say it is becoming more popular because it is less expensive for the boys' parents. In Chiwale's area the two ceremonies are run concurrently. The boys and girls go through the normal segregation rites at the beginning of the ceremony, but an *mwalimu* circumcises the boys according to Islamic practice. At the aggregation rites at the end of the period of seclusion, the star and crescent appears as one of the symbols along with the whale (*nyangumi*), antelope (*nkalapi*), leopard (*ziwawi*), and the other tribal effigies which are shown to the boys. Christianity in the south has had a similar effect. The Missions actively discouraged initiation ceremonies in the past. Many of the people in Mpona's and Malemia's area have dropped the custom, or have integrated prayers and other parts of Christian ritual into the ceremonies, though circumcision is steadfastly retained. The effect of these changes is that the important ritual control the chief had over the ceremony has been undermined, and so the prestige attached to it has also begun to fade in these areas. What I describe about the prestige of village headmen and the rights they have to initiation ceremonies is only partially true, and is falling away daily. The correlation I seek to establish is also disturbed by the fact that among the Ngoni there is a slightly different initiation ceremony (*chinkolo*) for boys. Most Ngoni send their boys to the Yao initiations but there are still some who hold their own traditional ceremonies. These are not within the mystical control of the chief so that some Ngoni headmen are outside the competition for the initiation rights. I should say, however, that most compete with the Yao for Yao initiation rights so that this factor is not as disturbing as appears at first sight. In addition, village headmen who move into a new area usually must obtain the permission of the chief before they may use the initiation rights they hold before coming into the area.

622 999 576 There are other indicators of the general high rank of village headmen. Junior headmen, like commoners, must give a special

2: Mitchell E-5 (1946-1949) 1956 FT7 Yao FT7

Arabic greeting to their seniors. This is done by placing the left hand on the chest and bending slightly forward to the village headman, saying, '*Sokoye*'. The senior should then respond '*Aloye*'. Also, important headmen are usually buried in the centre of the village, not in the common graveyard. The tomb of an important headman or personage, usually built of stones, concrete or brick, is called *nsat*. The right to bury in the village must be obtained from the chief 'because the land is his', and in Kawinga's area a fee of 6s. must be paid to him.

The Struggle for Government Recognition

Thus far, I have been discussing the ways in which the rank of village headmen may be expressed. I now describe the way in which these marks of prestige are associated in the three categories of headmen we have distinguished, and in what way the competition between them is phrased. I have already described how all the chiefs in the area to which I am referring are all successors of the original leaders of the invasions, and are usually the present Government representatives as Native Authorities.

The people must recognize the rank of chief because mystical beliefs prescribe activities in one direction, and because the limiting structure of the White Administration does so in another. A village headman cannot hold initiation ceremonies without the permission of the chief because of the mystical sanction, but the chief also has legal authority over his subject headmen. He as Native Authority is recognized by the Government and is its representative to his people. The Native Authority Ordinance (1951) specifically imposes penalties on those who do not recognize the authority of the chief. Under Section 12 of the Ordinance, the Native Authority may arrest without warrant any person who is accused of failing to obey his order or direction, interfere with his lawful duties, pretends to be a chief or assumes the duties of a chief without Government approval. Under Section 13(1) severe penalties are imposed on any person who conspires against or in any way attempts to undermine the lawful power and authority of any chief or Native Authority. His position is therefore greatly strengthened against the village headmen and I have been told of one or two prosecutions by chiefs under this section. Nowadays, the mere threat of

2: Mitchell E-5 (1946-1949) 1956 F77 Yao F77

632 643 ●539 698 action under this Ordinance is sufficient to cow his opponents. Therefore, the chief may also control the rise to power of his headmen because he is a Government official. At the same time a village headman may not move away to form a chieftaincy of his own: should he migrate with his followers nowadays, he will always find himself under a White system of Administration which upholds some other chief against him. The rank system must operate within a circumscribed framework and in reference to the chiefs.

632 539 698 I have already mentioned that being an Administrative village headman is a mark of prestige. Most of the struggle for rank revolves around this axis. Under the 1912 Ordinance, village headmen were only recognized if they had at least 20 taxable huts under them and they were paid a small annuity proportionate to the number of their taxable huts.[1] Before a headman could be recognized, therefore, he had to gather around him at least 20 tax-payers. After a headman had been recognized, the more villagers he could attract the higher his annuity. This situation is one with which the Yao headmen were long familiar. It is indeed the same process that went on before the Whites came, and that was outlined so clearly by Duff MacDonald, except that it is now cast in slightly different form. In consonance with the new money economy, superior status, marked by more dependants, brings a higher financial reward. But it would be false to imagine that the prospect of financial gain is the only spur to a village headman's attempts to enlarge his following. A headman of a large village as such, is still a 'big' village headman.

632 643 539 698 A headman who has sufficient followers to enable him to press a claim for a 'book' goes to the chief for it. The chief considers the merits of the case, but is unwilling to grant too many 'books' in his area. If he supports the claim the matter is referred to the District Commissioner, who considers the application, not in terms of the indigenous struggle for rank, but in terms of general Administrative considerations, such as finance,

[1] A definite rate of remuneration was fixed in 1918: it was computed at 10s. for every 300 taxes. See Murray, *Handbook*, 140. Under the 1923 Ordinance the remuneration was fixed at 2d. per Government tax of 6s. to a village headman and 3d. per 6s. to a Native Authority. *Report on Native Affairs for the Year Ended 31st December 1932*, Government Printer (Zomba, 1934), p. 5.

2: Mitchell E-5 (1946-1949) 1956 FT7 Yao FT7

and the case of administering groups with centralized authority. If he agrees, the necessary alteration is made in the tax-registers, and the new Administrative headman is paid his annuity and is called up by the District Commissioner whenever he holds a meeting. To the District Commissioner the chiefdom is made up of the villages on the tax-register, and in a situation of political importance he calls on the headmen of those villages for decisions. For example, when a chief was being installed, the District Commissioner called each Administrative headman forward and asked him whether he agreed to the succession. When the District Commissioner wishes to discuss any matter with a villager he calls forward the Administrative headman. The position of village headmen in the political structure becomes more effective after they have been recognized by Government. 622 643 554 648

I have no accurate measure of the proportion of all village headmen who are recognized by Government. From my records the percentage of Administrative village headmen out of the total of recognized village headmen is: 622 648 554

	No. Admin. Villages	% of Total recognized
Kawinga	160	84
Liwonde	104	71
Mpona	30	48
Chikweo	48	41
Ngokwe	22	40
Chambo	62	39

I have full records for the smaller chiefdoms, Mpona, Chikweo, Ngokwe and Chambo, but I know for certain that the figures for Kawinga and Liwonde are incomplete. My fullest and most reliable records are for Ngokwe and Chikweo, so that we may estimate roughly that less than half of the village headmen are Administrative village headmen.

Naturally the village headman, whose taxable population will be reduced by the granting of a new 'book', opposes this in the same way as his ancestor opposed the emigration of his village members in pre-White days. In 1947, in Jalasi's area for example, there was an argument hinging on this. 622 554 691

2: Mitchell E-5 (1946-1949) 1956 FT7 Yao FT7

622 554 691 Mlima was a village headman of long standing and had been recognized as an Administrative headman. Ngwaya was a headman who had come to settle under Mlima.[1] After some years Ngwaya felt that because he had his own village he should be given a 'book' and receive money from the Government. Mlima however resisted the claim, saying that his 'book' had been given to him by Jalasi. Both went to Jalasi's court so that the difference could be resolved. Jalasi rejected Ngwaya's claim and upbraided him for being recalcitrant. Ngwaya was fined 9s. and ordered to pay £1 to Mlima in compensation.

622 554 643 691 A rather more complex case brings out the position of the chief, the Administration and the conflict of the prestige-giving principles of historical primacy and White recognition.

In 1948, an Administrative village headman, Kalonga, from Nyambi's area, decided to migrate down to the more fertile land along the banks of the Shire River. This land was in Jalasi's area, and it was partially occupied by a minor village headman called Malilo. Kalonga had already selected his site for the village when Malilo came up to him and told him that he was the first in that area and that Kalonga should have asked him to indicate a building site. Kalonga, on the other hand, pointed out that he was an Administrative headman and that Malilo was not, and there the matter rested. In time Kalonga, because of his official position, became better known than Malilo. Malilo was jealous of this prestige and in due course went to Jalasi and complained that Kalonga was 'getting too big for his boots'[2] and that he was only a Newcomer into that area. Jalasi sent for Kalonga.

At the dispute in front of the chief, Malilo reiterated his complaint. Kalonga merely pointed out that Malilo was jealous of his 'book'. Jalasi dismissed the case reminding the two headmen that it was he who was chief of the country. Shortly after this, Kalonga went to Jalasi alone and told him that Malilo had told him that he, Jalasi, was no chief because he should have taken the 'book' and given it to Malilo. Jalasi said, 'It is impossible to change over the "books" which are written by the Whites', and then sent a messenger to bring Malilo to court. When he came he denied the tale and said that as far as he knew the only reason for Kalonga's animosity could be that he had refused to give him the *mbaye* greeting. Jalasi informed both headmen that they were to be independent of each other. Malilo

[1] *Kwakulipatika*—lit. one who had made himself a slave.

[2] *Kalikwerya*—reflexive causative of the verb *kukwela*, to climb, i.e. to cause oneself to climb or to exalt one's status.

2: Mitchell E-5 (1946-1949) 1956 FT7 Tao FT7

was to report strangers coming into his village area independently of Kalonga. Nowadays, there is much tension between the two headmen and they summon each other to court on the slightest pretext. The peace is kept only by order of Jalasi. On the whole, however, it is Kalonga who has the higher status and superior prestige.

Unfortunately I have no figures to show how large a village becomes before its headman applies for Government recognition. The average number of tax-payers under village headmen who have just been granted 'books' might have provided this information, but I was unable to collect it. Formerly, they could become Administrative headmen only if they had more than 20 tax-payers under them. Nowadays, however, owing to differential fertility and the reduction in size of villages because of internal dissension, many of the Administrative villages (22 per cent) are smaller than the 20 tax-payer limit. They, however, retain their 'books'. I know that often within the Administrative villages of important headmen or chiefs, there are contained some minor villages bigger than some Administrative villages which are farther away. For example, in Chiwalo's own Administrative village, I know that the villages of Selemani, Ali Kasoka and Ntapasia are larger than many Administrative villages. It is not only the size of the village which allows a headman to apply for a 'book'. It is his relative status in the community. Men of higher rank than Selemani, Ali Kasoka and Ntapasia could probably approach Chiwalo and ask him for a 'book'. But these three are Newcomers. Selemani was a refugee from the Portuguese wars and went to live in Mlumbe area in Zomba district. He came to Chiwalo's area in about 1930. Ali Kasoka moved in about 1940. Ntapasia came about 1921. But they dare not approach Chiwalo himself to ask for a 'book'. Here Chiwalo's rôle of chief is compounded with his rôle of Administrative village headman so that they would be asking Chiwalo voluntarily to reduce the size of his Administrative village. It is only when their villages become conspicuously large that headmen may begin to force the chief's hand. They have always one sanction they can bring to bear on the chief—they can threaten to move out of his area into another chiefdom. The chief may not retain any of his subjects by force. If they express a wish to live in another chiefdom he cannot stop them. On the other hand, useful as this weapon

2: Mitchell E-5 (1946-1949) 1956 FT7 Yao FT7

is when it is used by an Administrative village headman, as I shall illustrate later, it will not serve a minor village headman much to move out of one chiefdom to another if his object is to become recognized as an Administrative village headman. If he goes to another chiefdom he is automatically regarded as one of the most junior of the headmen. If he goes to another chiefdom as an Administrative village headman already, he takes with him his 'book' and to some extent the rank associated with it.

The size of Administrative villages as measured by the number of tax-payers in them is about equal in all three categories of village headmen. Table X sets out the distribution. The

TABLE X

DISTRIBUTION BY SIZE OF VILLAGE UNDER ABORIGINAL, INVADER AND NEWCOMER ADMINISTRATIVE HEADMEN

Tax-payers	Totals			Total	Percentages			Total
	Aborigines*	Invaders	Newcomers†		Aborigines	Invaders	Newcomers	
0-19	6	19	26	51	30·0	13·3	22·0	19·3
20-39	7	40	83	141	35·0	28·0	33·3	34·4
40-59	4	25	37	84	20·0	18·4	22·4	20·5
60-79	3	16	29	48	15·0	11·8	12·4	11·7
80-99	1	1	13	15	5·0	0·7	5·5	3·7
100-119	1	6	4	11	5·0	4·4	1·6	2·7
120-139	—	4	4	8	—	2·9	1·6	2·0
140-159	—	1	1	2	—	0·7	0·4	0·5
160-179	—	1	1	2	—	0·7	0·4	0·5
180-199	—	1	1	2	—	0·7	0·4	0·5
200-249	—	1	—	1	—	0·5	—	0·2
250-300	—	—	1	1	—	—	0·4	0·2
Totals .	20	136	254	410‡	100·0	99·8	100·0	100·1
Mean .	39·0	48·5	41·1	41·9				
S.E. .	8·7	4·0	2·8	2·3				

* Excludes one village whose size was unknown.
† Excludes 3 villages whose sizes were unknown.
‡ The total excludes an additional 10 villages for which full details were not recorded.

Administrative villages of the Aborigines, mostly Nyanja, appear to be rather smaller than those of the Invaders and Newcomers.

2: Mitchell E-5 (1946-1949) 1956 FT7 Tao FT7

Administrative headmen than either Christian or Pagan. The chiefs, of course, are all Moslem.

Lastly, the same trend is seen among those headmen who are of the same tribe as the chief, against those who are of other tribes (Table XIV). Here, however, the difference is so small

TABLE XIV

PROPORTION OF ADMINISTRATIVE HEADMEN AMONG ALL VILLAGE HEADMEN OF THE SAME TRIBE AS, OR DIFFERENT TRIBE FROM, THE CHIEF IN CHEWEO, NDEWEO, CHAMBA AND MOMBA AREAS

Type of Headman	Same Tribe	Different Tribe	Total
Administrative	83	65	150
Non-Administrative	78	71	149
Total	161	136	299
% Administrative Headmen .	51·8	47·1	50·2

$n = 1$; $\chi^2 = 0.95$; $p = 0.3400$.

that it may easily have arisen by chance. These factors, however, do not operate independently. There are more co-tribesmen, co-religionists and relatives of the chief among the headmen than among the other categories. In other words, the factors are all intercorrelated and it is possible to consider any particular factor as the independent variable. From the point of view of the people themselves, to be an headman is to have one of the best claims on the chief to become an Administrative headman.

THE SIGNIFICANCE OF THE SCARLET HEADBAND

Government recognition therefore provides the means whereby headmen are ranked in two major categories. But Administrative village headmen themselves are ranked by a number of prestige-indicating characteristics. The most important of these are the right to wear a plain scarlet headband and the right to hold boys' and girls' initiation ceremonies.

Of these two additional marks of rank the more important is the right to wear the scarlet headband. This headband is wrapped round the head, turban fashion. Most village headmen wear a headband of some sort, either of white or coloured cloth,

2: Mitchell E-5 (1946-1949) 1956 FTT Two FTT

(22) SSN 262. while most commoners do not. In Kawinga-Liwonde area, village headmen of high rank are entitled to wear a plain scarlet headband (*ulangali*). One informant suggested to me that the plain scarlet stands for blood, i.e. it indicates one of the most important elements in rank to-day—warrior ancestry. I do not know that this opinion is well supported. Among the 424 village headmen I enquired about, 24 or 5·7 per cent were entitled to this mark of honour. Of these, three were Aboriginal Nyanja headmen, 17 were Invaders, and only four were Newcomers. Of the four Newcomers, one had the right to hold it before he had come to the area from Portuguese East Africa and that was before the White conquest; one living in Chandie's area had brought it from Liwonde's area where he had been given the right to wear it; and the other two were in Chikwero's area and were given the right by the present Chikwero. The three Aborigines who wear the scarlet headbands are Kanombe in Kawinga's area, and Mbera and Mbunde in Mpone's area. All these are settled around the shores of Lake Shirwa and they are said to have been the original Nyanja chiefs in this area when the Yao invaded. These chiefs also have boys' and girls' initiation rights. The rank they hold in their own tribal communities is recognized by the Yao, who in any case ascribe superior status to the first-comers into an area. With the Nyanja chiefs the position became ambiguous. They had superior rank in that they were in occupation of the land before the Yao moved in. At the same time when they subjugated themselves to the Yao they accepted servility. Nowadays, the Nyanja are well integrated into the political life of the area and carry on their existence along the lake shores, still going to their traditional chief for the settlement of most of the cases not involving heavy compensation.

All Invader chieftains have scarlet headbands. Some of their direct relatives such as Sowa, their clan relatives such as Nanisma and Mapundu, or their patrilateral relatives such as Cibwana Liwonde; the son of the first Liwonde, also have them. After these the next important group who are entitled to wear them are the *ndunas*. Examples are Kangomba, Masinde and Cindambu in Kawinga's area and Makaca in Ngokwe area. The *ndunas* are village headmen, usually unrelated to the chief, but who have been long associated with him, and who are his

2: Mitchell E-3 (1946-1949) 1956 FT7 Yao FT7

councillors. Long ago they held a most important position within the chieftdom. They were the loyal headmen and intimates of the chief, who could therefore be entrusted with the government of outer areas. They were posted to various parts of the chieftdom; kept the chief advised of war and attacks; maintained the peace among the village headmen in their areas; and collected the ivory to which the chief was entitled and sent it to him. Nowadays, the *ndonas* find themselves in competition with other officials who have arisen from the White Administrative system. The chief also finds advisers and councillors in his court clerks and his court sergeants, but the *ndonas* still have much prestige and advise and assist the chief in his administration of the area. Earlier, I mentioned that a senior headman was allowed to have a mat to himself, and only his own friends and people of his rank could occupy it with him. The only people in the chieftdom who could share the chief's mat, were the *ndonas*, and they called him *ungwaga* (my friend). Because the *ndonas* were not related to the chief they were in the peculiar position of being able to settle quarrels between the chief and his family; they were the arbitrators in arguments between the chief and his 'younger brothers' (junior male matrilineal relatives), or the chief and his wives. By Yao custom, rank is inherited by a village headman's successor, so that the relationship between the chief and his *ndonas* is perpetuated through successive incumbents. In Kawinga's area, for example, the *ndonas* to-day have the same name and the same relationship and relative position with regard to the chief as the *ndonas* who invaded the country nearly 100 years ago. This traditional ranking of village headmen emerges as soon as the Government alters its policy. Recently, when the idea of group headmen was reintroduced, the chief nominated the *ndonas* to become group headmen—a position not unlike that they held before the White conquest.

There is considerable difference between the size of Administrative villages under those headmen who have the right to wear the scarlet headband and those who have not. Table XV shows this clearly. The mean number of tax-payers under the former headmen is 80, while under the latter it is only 38. Among the village headmen with the rights to wear the scarlet headband 62·5 per cent had villages of more than 60 tax-payers, while among other headmen only 25·0 per cent of the villages were in

2: Mitchell E-5 (1946-1949) 1956 FT7 Yao FT7

TABLE XV

SIZE OF ADMINISTRATIVE VILLAGES UNDER HEADMEN WITH SCARLET HEADBANDS AND UNDER WITHOUT

No. of Tax-payers	Without Scarlet Headband	With Scarlet Headband	Total	% Headmen with S.H.
Under 40	215	7	232	3·0
40–79	125	7	132	5·3
80–119	25	3	28	10·7
120–159	6	2	8	25·0
160 and over	7	5	12	41·7
Total	386	24	410*	5·9

Combining villages of more than 80 tax-payers.

$n = 2$; $\chi^2 = 24·56$; $p < 0·0001$.

* Excludes 4 villages in which the number of tax-payers were unknown.

this category.[1] The village headmen who are entitled to wear the scarlet headband are mainly founders and people of high rank. Their villages are large because of their rank as well as vice versa.

I have never heard of a village headman's wearing a scarlet headband without the chief's permission, and I am not sure what sanctions the chief would apply to prevent it. I have heard men say that village headmen who are not entitled to wear it do so if they live far away, but take it off when they come near the chief's court. However, this was only in casual conversation and I did not have an opportunity to check it. From the point of view of the people the right is so bound up with traditional status that it is almost inconceivable that the custom should be flouted. As we have seen, among the Newcomers only two have been given the right within the last 30 years.

Yet the significance of the scarlet headband differs considerably from area to area. In Malemia and in Jalasi areas the custom seems either to have fallen away or never to have existed. In Jalasi area Islam may have some effect. In Malemia area the majority are Christians and most headmen have taken to

[1] Diff. of per cent = 37·5; S.E. of diff. = 9·77; C.R. = 3·83; $p = 0·0001$.

2: Mitchell E-5 (1946-1949) 1956 FTT Yao FTT

European-type clothing. In Nyambi area, abutting on Kawinga-Liwonde area in the north, there are 12 Administrative village headmen out of 37 who are entitled to the scarlet headband (32 per cent). For the Kawinga-Liwonde area the percentage is 37. An informant explained why a large proportion of headmen in Nyambi area had the right to wear the headband: 'The old Nyambi and the present one do not care. If a man has many hens, and if he says that his uncle had a scarlet headband, then he is given one too.' Even within the Kawinga-Liwonde area there is some variation in the number of headmen who are entitled to the scarlet headband. The following table sets this out.

Chieftaincy	Total Admin. Headmen	% Scarlet Headbands
Kawinga	160	37
Liwonde	114	48
Mpona	30	100
Chikwewo	48	84
Ngokwe	21	142
Chambo	61	49

Mpona area near Lake Chirwa shows such a high proportion because of the Nyanja ex-chiefs who are entitled to the scarlet headband. Chikwewo and Ngokwe on the other hand are the Mpondo chiefs and seem to have taken the same attitude as Nyambi and his predecessors. In contrast to the statement about Nyambi, one Administrative headman in Mpona's area said: 'The chief's scarlet band is good enough for us all. If each had one it would be too gaudy!'

The Struggle for Initiation Rights

Village headmen are generally outside competition for the right to wear the scarlet headband. These rights have been established largely by ancient custom and are almost confined to the Invaders or to those who have had them before they came into the area. The competition for initiation rights, however, goes on steadily. H. L. Duff had noticed this as early as 1906.[1] Newcomers may approach the chief and agitate for the rights,

[1] See p. 81.

2: Mitchell E-5 (1946-1949) 1956 FT7 Yao FT7

(22) pressing their claims on many grounds. They may stress that
559 they have a large village under them and that they have many
(1) children to initiate, and argue that their villages are far away
from the nearest headman who has these rights. Or they may
use their rank and connection with the chief. If all else fails
they may threaten to move to another chiefdom. Punya
threatened to do this.

(23) In 1947, Punya, an Administrative village headman in Chiwalo area,
559 had 43 tax-payers under him and thought that he should have initiation
(1) rights. He had come to Chiwalo's in 1933 after the village had split
574 in Chikowi's area near Zomba. He had relatives in Kapalowa's
village in Chiwalo's area. He argued with Chiwalo that his uncle
had had initiation rights. Chiwalo on the other hand, argued that
Punya village was so close to his own—a matter of under a mile—
that he could not consider it. This argument went on for some
months. Eventually Punya told the chief that he was going to leave
his area. Chiwalo then retreated to some extent and offered Punya
the permission to use the *dipate* basket, that is, the right to conduct
girls' initiation ceremonies. Punya, after consulting his elders, took
this and was satisfied.

But the chief is not always cowed by the threat to leave his area. He is sometimes able to draw on his official position to control his headmen. The argument between Makata and Ntimbuka illustrates this very well.

Makata was an Administrative headman of some standing in Chiwalo's area. He had been one of the invading headmen and was entitled to wear the scarlet headband. In 1947, he had 101 tax-payers under him and had been given the right to hold boys' and girls' initiation ceremonies at least 30 years ago. Ntimbuka on the other hand was a comparative newcomer. He came from Kawinga's area in about 1930. He is of Nyanja stock but has adopted the Yao language and customs. His village in 1947 had 23 tax-payers and was about 300 yards from Makata's. Early in 1947, Ntimbuka started quarrelling with Makata about the right to boys' initiation ceremonies. He felt that he ought to have rights as well as Makata. Eventually he told Makata that he would refuse to take the boys to his initiation ceremonies. Seething with discontent Ntimbuka went to complain about Makata to Chiwalo, and told him that he had had an argument with Makata and that he was going to leave the area because of it. Chiwalo called Makata and asked him what the trouble was. Makata told Chiwalo that Ntimbuka was jealous of the basket. Chiwalo

2: Mitchell E-5 (1945-1949) 1956 FT7 Tao FT7

then told Ntimbuka that he could not give a sacrifice basket to him because his village was so close to Makata's. Ntimbuka was not satisfied with this and continued quarrying. Chiwalo, at last exasperated, threatened Ntimbuka that if he had any more trouble he would send him to Kawinga to be dealt with. Kawinga of course is the Native Authority in the area and holds the power of arresting headmen under Section 12 of the Ordinance. Ntimbuka was duly cowed by this threat and meekly agreed to send his boys to Makata's initiation ceremonies.

Chiwalo had to support Makata against Ntimbuka. Makata was a powerful headman: he had rank from his descent and a large village under him. Ntimbuka was a Newcomer and he had only a fifth of the followers that Makata had. If it meant losing followers it was better to lose the smaller village. As it was Chiwalo could use the power of the White Administration to keep Ntimbuka within his area and yet keep him subservient.

A Newcomer is unlikely to be given both boys' and girls' initiation rights. He is more likely to be able to get only one of the rights. Table XVI sets out the number of headmen in

TABLE XVI

NUMBERS OF HEADMEN HOLDING BOYS' AND GIRLS' INITIATION RIGHTS AMONG ABORIGINAL, INVADER AND NEWCOMER HEADMEN

Type of Initiation Right	Aboriginal	Invader	Newcomer	Total
Both boys' and girls' init. rights	—	17	14	31
Boys' init. rights only	1	6	10	17
Girls' init. rights only	1	11	31	44
No init. rights	16	84	158	258
Total	18	119	213	350*
% Init. holders	11·1	29·4	25·7	26·3

Combining Aboriginal and Invader totals.

$n = 31$ $\quad \chi^2 = 6{\cdot}48$; $\quad p = 0{\cdot}0254$.

* Total excludes the 24 headmen who have the right to wear the scarlet headband.

each category who hold initiation ceremonies. While more Invaders have the right to both ceremonies the proportion holding

2: Mitchell E-5 (1946-1949) 1156 F27 Tao F27

(32) ● 539 (1) only one is roughly the same.[1] A Newcomer may approach the chief and ask for initiation rights in certain circumstances only. In general, these are that his village is a very large one, that he had the rights in the area from which he has just come, and/or that he is living in so isolated a part that it would be a hardship for his children to go to the nearest other headman who holds the rights; but he may press his claim if he is related to the chief and can approach him as a kinsman.

There is little doubt that the rights are closely associated with the size of the villages:

TABLE XVIIa

Initiation Rights among Invaders and Newcomer Headmen who have Villages with and the rights to Tax-payers

(The figures in brackets are percentages)

Type of Init. Right	Over 60		Under 60		Total
	Invaders	Newcomers	Invaders	Newcomers	
Both Init. rights . .	10 (32·3)	9 (20·0)	7 (20·6)	5 (16·1)	31 (100·0)
Boys' Init. rights only .	2 (10·4)	5 (31·3)	4 (25·0)	5 (31·3)	16 (100·0)
Girls' Init. rights only .	2 (4·8)	13 (31·0)	10 (23·8)	17 (40·4)	42 (100·0)*
No Init. rights	9 (13·0)	26 (37·1)	23 (26·8)	170 (60·7)	280 (100·0)†
Total . .	23 (8·0)	53 (14·4)	96 (26·0)	197 (53·4)	369 (100·0)

$n = 3$‡; $\chi^2 = 17·40$; $p < 0·0001$.

* Excludes 1 village whose size was unknown.
† Excludes 2 villages whose sizes were unknown.
‡ Combining Invader and Newcomer groups.

[1] Invaders with both initiation rights (17 of 119) = 14·3 per cent; Newcomers with both initiation rights (14 of 253) = 5·5 per cent; Diff. of per cent = 8·8; S.E. of diff. = 3·07; C.R. = 2·85; $p = 0·0044$.

Invaders with rights to only one of the initiations (18 of 119) = 15·1 per cent; Newcomers with rights to only one of the initiations (41 of 253) = 16·2 per cent.

2: Mitchell E-5 (1946-1949) 1956 FT7 Tao FT7

TABLE XVIIa

INITIATION RIGHTS AMONG INVADER AND NEWCOMER HEADMEN WHO HAVE VILLAGES WITH MORE AND THAN 60 TAX-PAYERS
(Arranged to hold the influence of village size fixed)

Type of Headmen	Over 60		Under 60		Total
	Init.	No Init.	Init.	No Init.	
Invaders . .	14 (11·8)	9 (7·6)	21 (17·6)	75 (63·0)	119 (100·0)
Newcomers .	27 (10·8)	26 (10·4)	27 (10·8)	170 (68·0)	250 (100·0)
Total . .	41 (11·1)	35 (9·5)	48 (13·0)	245 (66·4)	369 (100·0)

$n = 3$; $\chi^2 = 3{\cdot}96$; $p = 0{\cdot}26$.

Among all headmen (Table XVIIa):

19 of 31 headmen who hold both initiation rights have villages with more than 60 tax-payers . . . . . = 61·3%
7 of 16 headmen who hold only the boys' initiation rights have villages with more than 60 tax-payers . . . . . = 43·7%
13 of 42 headmen who hold only the girls' initiation rights have villages of more than 60 tax-payers . . . . . = 31·7%
35 of 280 headmen who hold no initiation rights have villages with more than 60 tax-payers . . . . . = 12·5%

When the influence of village-size is held constant the advantages of Invaders over Newcomers in the competition for initiation rights is discernible, but the differences are so small that they are of doubtful significance (Table XVIIb).

14 of 23 Invader headmen with villages over 60 tax-payers have initiation rights . . . . . = 60·9%
27 of 53 non-Invader headmen with villages over 60 tax-payers have initiation rights . . . . . = 50·9%
21 of 96 Invader headmen with villages less than 60 tax-payers have initiation rights . . . . . = 21·9%
27 of 197 non-Invader headmen with villages less than 60 tax-payers have initiation rights . . . . . = 13·7%

As we may anticipate, relationship with the chief is an important factor in the competition for initiation rights. Among the chief's direct and clan relatives for example, 36·4 per cent (51 of 140) hold initiation rights, but only 16·8 per cent (39 of

2: Mitchell E-S (1946-1949) 1956 FT7 Yao FT7

(22
693
SSV
81

TABLE XVII

INITIATION RIGHTS AMONGST INVADERS AND NEWCOMERS HOLDERS WHO ARE RELATED AND UNRELATED TO THE CHIEF

Type of Initiation Holder	Invaders				Newcomers				Total
	D	C	N	T	D	C	N	T	
Both init. rights	3	8	4	17	2	3	9	14	31
Boys' init. rights only	6	1	2	9	1	1	8	10	19
Girls' init. rights only	3	3	2	10	3	10	14	27	37
No init. rights	26	25	33	84	13	25	160	198	282
Total	38	40	41	119	21	41	191	253	372
% Init. holders	31·6	40·0	24·2	29·4	38·1	39·0	19·4	21·7	24·2

D = Direct relatives; C = Clan relatives; N = Non-relatives; T = Total.

Combining Invader and Newcomer totals.

$$\chi = 6; \quad \chi^2 = 20{\cdot}24; \quad p = 0{\cdot}00112.$$

231) of his non-relatives hold them[1] (Table XVIII). There is a slightly greater proportion of the clan relatives holding initiation rights than direct kinsmen, but the difference is insignificant.[2] Slightly more of the chief's relatives among the Newcomers hold initiation rights than those among the Invaders,[3] but once again the difference is so small that it might easily have arisen by chance. A much greater proportion of Invaders is related to the chief than of Newcomers,[4] so that among the Invaders the relative advantage of their kinship with the chief, as against the unrelated, is somewhat reduced. There are very many Invaders who can claim kinship with the chief in their struggle for initiation rights. Among the Newcomers, conversely, because there

[1] Diff. of per cent = 19·6; S.E. of diff. = 4·58; C.R. = 4·28; $p = 0{\cdot}00001$.

[2] Direct relatives (20 of 59) = 33·9 per cent; Clan relatives (31 of 81) = 38·2 per cent; Diff. of per cent = 4·3; S.E. of diff. = 8·2; C.R. = 0·52; $p = 0{\cdot}6030$.

[3] Newcomers (24 of 62) = 38·7 per cent; Invaders (27 of 78) = 34·6 per cent; Diff. of per cent = 4·1; S.E. of diff. = 8·2; C.R. = 0·5; $p = 0{\cdot}6170$.

[4] Excluding those entitled to wear the scarlet headband. Invaders (78 of 119) = 65·6 per cent; Newcomers (62 of 253) = 24·5 per cent.

2: Mitchell E-5 (1946-1949) 1956 FT7 Tao FT7

are so few of the chief's kinsmen among them, to be related to the chief is a distinct advantage in this struggle.

I recorded the origin of the initiation rights of only 38 of the 55 Newcomer headmen who hold them, excluding those who also have the right to wear the scarlet headband. Table XIX sets out these data. We cannot put too much reliance on these

TABLE XIX

THE ORIGIN OF INITIATION RIGHTS OF SOME NEWCOMER HEADMEN

Type of Initiation Rights	Given by Chief of present residential chieftaincy	Brought from elsewhere	Total	% Brought in
Both init. rights . .	8	5	13	38
Boys' init. rights only .	9	0	9	0
Girls' init. rights only .	15	1	16	6
Total	32	6	38	16

figures because they cover only about three-quarters of the village headmen in this category, and these, moreover, were not randomly selected. As they stand, the figures support my earlier conclusion that Newcomers are more likely to obtain rights for only one initiation ceremony, than for both together. While 38·5 per cent (5 of 13) of the village headmen who hold both initiation ceremonies had brought in their rights with them from outside, only 4·0 per cent (1 of 25) of those who hold only one of the rights had done so.[1] An analysis of the periods when headmen were given their rights reveals consistent results.

From Table XX we see that:

Of 11 headmen who hold rights to both initiation ceremonies, recent chiefs granted 3 . . . . . = 27·3%

Of 8 Newcomers who hold rights to both initiation ceremonies, recent chiefs granted 2 . . . . . = 25·0%

Of 12 headmen who hold rights to only one of the initiation ceremonies, recent chiefs granted 3 . . . . . = 25·0%

Of 24 Newcomers who hold rights to only one of the initiation ceremonies, recent chiefs granted 14 . . . . . = 58·3%

[1] Diff. of per cent = 34·5; S.E. of diff. = 12·47; C.R. = 2·77; $p = 0·0056$.

2: Mitchell E-5 (1946-1949) 1956 FTT Tan FTT

TABLE XX

Where Initiation Rights were Granted to Newcomers and Invaders

Type of Initiation Rights	By early Chiefs		By recent Chiefs*		Total
	Invaders	Newcomers	Invaders	Newcomers	
Both inits. . .	8	6	3	2	19
One init. only .	9	10	3	14	36
Total . . .	17	16	6	16	55

* This is obviously a crude classification. I have taken roughly 11 years as the dividing line. As the early chiefs I have classified all the Kwengas before and including Kwenga V who died in 1913; all the Liwandes before and including Liwande III who died in 1901; all the Ngukwens before and including Ngukwen IV who died in 1913; all the Mpemes before and including Mpeme II who died in 1913; and all the Chikwens before and including Chikwen II who died in 1914.

In other words, recent chiefs have been granting single initiation rights to Invaders in the same proportion as they have been granting both rights, but they have been granting Newcomer headmen the right to hold only one ceremony more often than the right to hold both. Of the six sets of rights to initiation ceremonies granted by recent chiefs to Invader headmen, three were rights to hold only one ceremony, while 14 of the 16 initiation rights granted to Newcomer headmen were for one ceremony only.[1]

Headmen do not make use of their bonds of common religion or tribe with the chief in their competition for initiation rights. Table XXI sets out the numbers of headmen of different religion. There is a substantially smaller proportion of Pagan headmen (9·7 per cent) holding initiation ceremonies than either Christians (25·5 per cent) or Moslems (24·4 per cent).[2] Most Pagans, however, are also Newcomers so that this difference is actually a reflex of the generally lower rank of Newcomers. Table XXII sets out the number of headmen of the chief's tribe and of other

[1] i.e. 50·0 per cent against 87·5 per cent; diff. of per cent = 37·5; S.E. of diff. = 20·08; C.R. = 1·87; p = 0·0614.

[2] Pagans = 9·7 per cent; Others 24·6 per cent; diff of per cent = 14·9; S.E. of diff. = 7·94; C.R. = 1·88; p = 0·0603.

J: Mitchell E-5 (1946-1949) 1956 F'27 Tao F'27

622.
659
[illegible]
795
679

TABLE XXI

THE DISTRIBUTION OF INITIATION RIGHTS AMONG HEADMEN OF DIFFERENT RANKING

Type of Initiation Holder	Moslems	Christians	Pagans	Total
Both init. rights . .	92	6	1	99*
Boys' init. rights only .	10	4	—	18
Girls' init. rights only .	31	8	3	39†
No init. rights . . .	210	41	28	289‡
Total	339	59	31	429

$n = 6$; $\chi^2 = 3.03$; $p = 0.33778$.

* Excludes 1 headman whose religion was unrecorded.
† Excludes 4 headmen whose religion was unrecorded.
‡ Excludes 2 headmen whose religion was unrecorded.

TABLE XXII

THE DISTRIBUTION OF INITIATION RIGHTS AMONG HEADMEN OF THE SAME AND DIFFERENT TRIBE AS THE CHIEF

Type of Initiation Holder	Same Tribe	Different Tribe	Total
Both init. holders	20	11	31
Boys' init. holders only . . .	7	9	16
Girls' init. holders only . . .	23	20	43
No init. rights	136	126	262
Total	206	166	372
% Init. holders	24.3	24.1	24.3

$n = 3$; $\chi^2 = 0.17$; $p = 0.34163$.

tribes who hold initiation rights. Once again the proportion of headmen of the same tribe as the chief who hold initiation rights is the same as that of headmen of different tribes from the chief. We may say, therefore, that membership of tribe is not an operative factor in the granting of initiation rights.[1]

[1] The factors contributing to the granting of initiation rights are obviously all intercorrelated.

2: Mitchell E-5 (1946-1949) 1956 FT7 Yao FT7

622. The right to hold initiation ceremonies may be held concurrently with the right to wear a scarlet headband. For purposes of analysis thus far, I have treated the holding of initiation ceremonies separately. By common consensus, the wearing of this headband is an indicator of much greater rank than the holding of initiation ceremonies. The highest ranking headmen, like the chiefs, usually have the right to wear the scarlet headband together with the rights to both initiation ceremonies. In order to show how rank varies among the main categories of village headmen I have devised a numerical

TABLE XXIII

MEASURE OF RANK AMONG ADMINISTRATIVE VILLAGE HEADMEN

Type of Headman	With Headband				Without Headband				Total
	Both	Boys only	Girls only	No rights	Both	Boys only	Girls only	No rights	
Aborigines:									
Direct rel.	—	—	—	—	—	—	—	2	2
Clan rel.	1	—	—	—	—	—	—	1	2
No rel. .	2	—	—	—	—	1	1	13	17
Total .	3	—	—	—	—	1	1	16	21
Invaders:									
Direct rel.	8	1	—	—	5	2	3	26	47
Clan rel.	4	—	—	—	8	2	3	23	44
No rel. .	3	—	—	1	4	2	2	33	45
Total .	15	1	—	1	17	6	11	84	136
Newcomers:									
Direct rel.	—	—	—	—	2	1	5	13	21
Clan rel.	—	1	1	—	3	1	12	25	43
No rel. .	1	—	—	1	9	8	14	160	193
Total .	1	1	1	1	14	10	31	198	257
Grand total	19	2	1	2	31	17	44	298	414

2: Mitchell E-5 (1946-1949) 1956 F'27 Tao F'27

system of ranking. I have assumed that the rarer the mark of rank the higher the rank it indicates. Table XXIII sets out the incidence of marks of rank among the 414 Administrative village headmen for whom I have recorded the data. In all, there were 24 headmen with scarlet headbands, 69 with boys' initiation ceremonies and 95 with girls' initiation ceremonies. I have given the holding of a scarlet headband the value of the reciprocal of the proportion of village headmen who hold that right, i.e. 414/24 = 17·3.

The value of holding a boys' initiation ceremony by the same procedure is: 414/69 = 6·0.

The value of holding a girls' initiation ceremony is: 414/95 = 4·4.

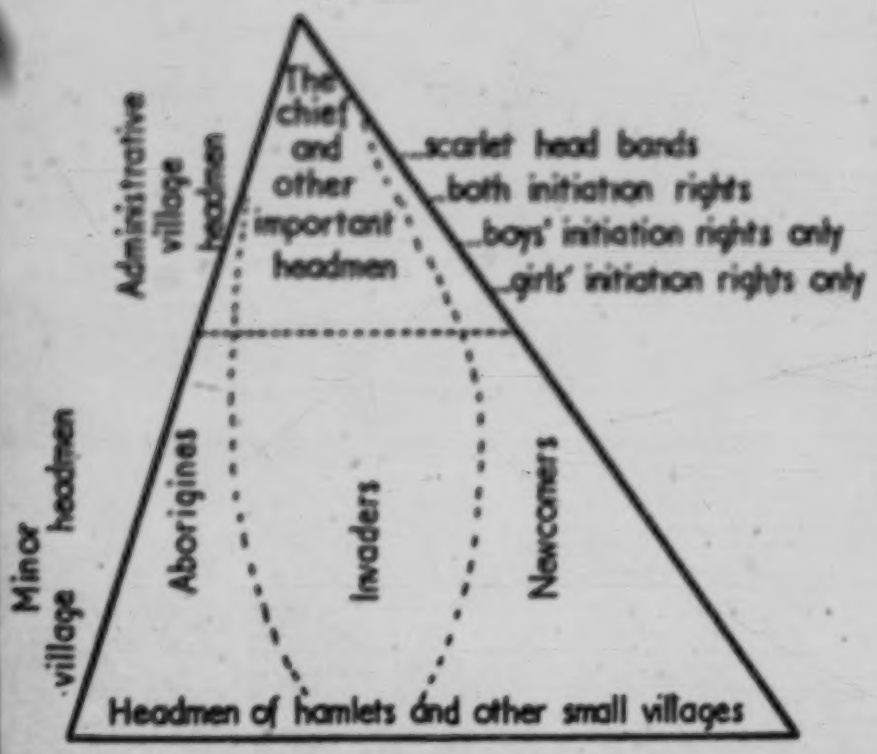

DIAGRAM 2. PARADIGM OF THE POLITICAL STRUCTURE.

2: Mitchell E-5 (1946-1949) 1956 FT7 Yao FT7

622 The value of holding the various combinations of rights then
554 are these:

881 Scarlet headband and both initiation ceremonies . . . . = 27·7
292 Scarlet headband and boys' initiation ceremony . . . . = 23·3
Scarlet headband and girls' initiation ceremony . . . . = 21·7
Scarlet headband alone . . . . . = 17·3
Both initiation ceremonies . . . . . = 10·4
Boys' initiation ceremony only . . . . . = 6·0
Girls' initiation ceremony only . . . . . = 4·4

We may now score the rank of headmen within any particular category by estimating the percentage score from a possible. For example, the score of the rank among Aboriginal headmen would be:

3 × 27·7 = 83·1
1 × 6·0 = 6·0
1 × 4·4 = 4·4
93·5 (expressed as a percentage of 21 × 27·7 = 16·1)

622 Using this method I have set out in Table XXIV the rank
554 scores for headmen in the categories in Table XXIII. Table XXIV shows that on the whole ranking among the Invader

TABLE XXIV

RANK SCORES FOR ADMINISTRATIVE VILLAGE HEADMEN OF DIFFERENT CATEGORIES

Aborigines:		
Chief's direct relatives	0	
Chief's clan relatives	50·0	
Chief's non-relatives	14·0	
All Aborigines		16·1
Invaders:		
Chief's direct relatives	25·4	
Chief's clan relatives	18·7	
Chief's non-relatives	13·1	
All Invader headmen		19·2
Newcomers:		
Chief's direct relatives	8·4	
Chief's clan relatives	11·3	
Chief's non-relatives	4·6	
All Newcomer headmen		6·1
All chief's direct relatives		19·6
All chief's clan relatives		15·8
All chief's non-relatives		6·8

2: Mitchell E-5 (1946-1949) 1956 FT7 Yao FT7

headmen is higher than among the Aborigines or the New-comers. It also shows quite clearly that the chief's direct relatives hold more of the privileges associated with rank than his clan relatives do, and they in turn hold more than his non-relatives. 622 554

The Political Process as a Struggle of Headmen Against the Chief

Modern chiefdoms appear to be organized on essentially the same principles as those described by Duff MacDonald. A chiefdom is headed by a chief and under him his subjects are organized in villages. Each village is represented by a headman, who stands in a relationship to the chief and to other village headmen, according to the prestige of the group he represents. This prestige is determined partly by his historical association with the chief in his past military exploits, partly by the size of his village, and partly by the prestige he has had in other areas. These elements were significant in Yao polity before the advent of the Whites, as we have seen from Duff MacDonald's description. Village headmen then were continually involved in a struggle for power among themselves and against the chief.[1] The struggle for power among village headmen continues to-day though in a changed context. Military power is no longer the object of the competition between them: the struggle for followers has become transmuted into a struggle for tax-payers. In harmony with the new political and economic situation a successful headman is not rewarded by military superiority, but by Government recognition and an official emolument. 643 622 554 178

At the same time, the chief whose power in the pre-White days resided in his armed forces, nowadays draws on the power of the White Administration to exercise his authority over his village headmen. His position is strengthened by Government decree and he does not hesitate to threaten to use it if necessary. Although the prestige of chiefs is higher than that of any of the village headmen, the difference in prestige between any chief and his most important headman is not very great. They are treated with almost the same deference by the minor village headmen and commoners, and they are referred to by the same term (*mwenye* = chief). The chief or an important village headman

[1] See Chap. II, p. 34.

The chief or an important village headman

[601] is usually addressed by a kinship term, either *baba* (father) or
643 *ambuje* (master or grandparent). When he is referred to, his
622 name is not used. Village headmen are owners or wardens of
554 villages (*aryene misi*) but only those headmen of some standing
178 are referred to as *mwenye*.

Important village headmen, like the chief, are in mystical
643 danger from pollution by death. They cannot come to the hut in
622 which a corpse is lying ; and they cannot eat the chicken which
554 has been brought to them by relatives of the deceased to announce
761 the death. Like the chief too, an important headman may be buried in a tomb in his village and not in the graveyard.

But an important element in their relationship nowadays is
643 that the Administration will support the chief against a village
622 headman when it comes to a trial of strength, and that a headman
554 these days is precluded by modern conditions from setting up
578 chiefdoms as he did in the old days. Village headmen therefore
691 must struggle for power against their fellows and the chief within the modern Administrative framework. Some attempts are made to resist the power of the chief but these are rarely successful. The dispute between Liwonde and Ndenda illustrates this.

Ndenda was an Nguru headman, who in 1947 had 284 tax-payers under him (Liwonde, the chief, had 186 in his village). Ndenda had come into Liwonde's area before the White invasion and had surrendered with his relative Mlelemba, to Liwonde. The second Liwonde had given him both initiation rights but, unlike his relative, he did not have the right to wear a scarlet headband.

In 1938 or thereabouts, Liwonde decided to move his village site from the Shire River to its present site about half-way up the Great Rift scarp. He sent two of his young men to look for a suitable site, and to plant some mango trees there when they had found one. Ndenda heard of this and sent one of his men to take Liwonde's men into custody. He took their hoes away and then told them to go back to tell the chief they were planting in his (Ndenda's) land. In due course Liwonde moved up to his new site, and asked Ndenda why he had taken the hoes away and whether he owned the country, i.e. was the chief. Ndenda now argued that Mlelemba's ancestors had been given the rights of chieftainship over this area and that the first Mlelemba in the area had given Liwonde some elephant tusks for these rights. Liwonde replied that the chief has a right to tusks and that many had given tusks to him but were not entitled for that reason to rights of chieftainship. Liwonde handled this situation by calling a meeting of the village headmen in the area. They assembled

and the claims of Ndenda were debated. The headmen supported Liwonde in his claim that the tusks were part of the chief's rights and that when Mlelemba had come he had come 'to get fire from the chief'. Liwonde then upbraided Ndenda for imagining that because he had so many followers he was a chief, and fined him 10*s.* for being insolent. 643 622 554 578 691

The struggle between Liwonde and Ndenda did not end however. Some years afterwards a man came to Liwonde and said that he wanted to live in his area. This man was a complete stranger and had no relatives there. Liwonde sent him to Ndenda's village. Later while living in the village, this man stole some cloth. He was arrested and Ndenda brought him to the chief saying that the chief was responsible for him. Liwonde told Ndenda that he was being insolent again and that the responsibility must rest with him because the man had married into his village. He ordered Ndenda to pay £1 to compensate the victims of the theft. This Ndenda did but in his view this was tantamount to being chased out of the chief's area. He therefore moved with his children across the boundary northwards into Jalasi's area, and told his unrelated villagers to follow him. They refused to leave Liwonde's area. He was helpless and could do nothing about it. He returned to Liwonde's area a broken man and died shortly afterwards. His eldest son took charge of the village affairs, but so far no successor has been found.

The struggle between Ndenda and Liwonde has some interesting features about it. The strength of the chief in his Government position is not as evident as it has been in other struggles, as, for example, between Jalasi and Kalonga, or between Chiwalo and Ntimbuka, in the cases I cited earlier.[1] It appears only indirectly. Ndenda did not appeal to the District Commissioner against the fine as he might have done if he had felt his position to be more secure. The case history also shows how Liwonde ranged his other important headmen, 47 per cent of whom were kinsmen or co-Invaders, around him against Ndenda who was neither. It shows also that Ndenda's reaction to what he felt to be an injustice, typically enough, was to emigrate and to try to injure the chief by reducing his followers. When this failed he was defeated and it was his downfall, for, like a chief, 'a headman without people is nothing'.[2] 643 622 554 578

[1] Pp. 86 and 96.

[2] *Mcilambo nayo nganakhala ilunda ngawo mcilambo*: 'A chief who has no people is not a chief'—a saying frequently quoted to emphasize the dependence of the chief on his subjects.

2: Mitchell E-5 (1946-1949) 1956 FT7 Yao FT7

who are sexually inactive from contracting *ndaka*.[1] At the same time the headman gives each household a piece of the fire which has been newly kindled in the traditional way by rubbing two sticks together.

The mystical danger inherent in the act of setting up a new village is well brought out in the propitiatory prayer and the abstinence from sexual intercourse. Once again it is the village headman who must make the offering to his ancestors; and it is the village headman who has intercourse with his wife so that the effluvium from his sexual activity may permeate the medicine in the hut and so protect the villagers from *ndaka*. Lastly, it is very important that the whole village cooks and is warmed by one fire. 'We are of one fire' expresses the common origin of two villages; though in fact every time a new village is founded a new fire should be kindled. To bring fire from the village of origin is to bring sorcery, since the Yao believe that sorcery can operate between persons closely linked by kinship only. To have one's own fire is to be autonomous from other groups.

The Burdens and Rewards of Headmanship

MacDonald had the perspicuity to see not only that the village headman was the representative of a corporate group and that he represented this group to outsiders, but also that he represented external authority to his villagers. The village headman who in his person stood for the unity of the group, performed certain ritual acts which emphasized this, such as praying to the village ancestors. In spite of the decline of the ritual his position is still regarded as exceptional. Much, however, depends on the rank of the village headman. There may not be much difference in ritual observances and mystical dangers between a headman who has in his charge a meagre three or four huts, and a commoner. In the larger and more important

[1] This is one of the most important mystical concepts of the Yao. I have described this condition and its implications more fully in *Marriage among the Machinga Yao of Southern Nyasaland* (R.-L.I. Paper), forthcoming. Briefly it is a disease characterized by œdema which affects those who are sexually inactive when they are suddenly brought into contact with a person, or an object which he has touched, after having intercourse. The people most affected are the young and the old, i.e. those who cannot have sexual intercourse. Those who are capable of intercourse are expected to have ritual intercourse with a stranger, and so fortify themselves against this dread disease.

2: Mitchell E-5 (1946-1949) 1956 FT7 Yao FT7

villages, however, the headman's activities may be as circumscribed by ritual prohibitions as the chief's are. 622 554

The village headman is subject not only to mystical dangers but also to other dangers deriving from his position of authority. It is significant that villagers never go to a diviner to find out the cause of a village headman's death. When I asked informants why this was so, they said, 'Well, what's the use of it? He has enemies on all sides in the village who are trying to kill him with their magic.' In harmony with this view of village headmanship, the symbolic object which represents the village headman in the diviners' gourds I have seen, is a small ring of grass (*singwa*), a copy of the grass cushion women place on their heads when they are carrying loads. This symbolizes the ring of enemies which surrounds the village headman. The saying 'the tortoise defecates on the one who carries it',[1] usually applied to chieftainship, applies equally well to a village headman. 622 787 578 [482]

A village headman may expect little material benefit from his position of authority. If he is an Administrative village headman he may be paid a small annuity of 5*s*. or 10*s*.[2] Returning labour migrants may give him a blanket or a military overcoat, or perhaps a few shillings, but this is not usual. If he is not a strict Moslem he will almost certainly be given a pot of beer from every brewing made for sale in the local 'club house'. On the other hand, if an important stranger, particularly a White official, arrives in the village he feels he must give his guest a chicken. It is mannerly to reciprocate with another gift, but not all Whites know this, or, if they do, do not observe it. In particular if the chief comes to his village, he will be expected to entertain him and here can expect no recompense—the chief 'eats from his country'. 622 651 431

The Yao know that the position of headman is no sinecure. Frequently the one chosen to succeed refuses to accept the position, especially if he is well placed in employment. It is significant that the word for an heir is *litegwa*[3]—the one who is trapped. An 622 554

[1] *Ngonjo jikunyela msyene iwajigele.*

[2] Until recently this was true. As I was leaving the field in 1949, I heard that the Administration had decided to abandon this system in favour of one in which only group headmen would be remunerated.

[3] Substantive form of the passive of the verb *kutega*—to set a trap as for animals. This word is not widely known, especially among the younger Yao.

2: Mitchell E-5 (1946-1949) 1956 FT7 Yao FT7

622 heir has to balance up the difficulties inherent in his position of
554 leadership, including his fear of sorcery, with its honour and rank.

Commoners respect village headmen in the same way as minor headmen respect their superiors. Headmen of important villages are given a special greeting by the commoners; they usually wear a distinguishing headdress; they sit on a mat alone or on a chair, while the commoners sit on the floor; they walk in front of commoners on the road; they sit under the chief's verandah while the commoners sit in the sun; and they are buried in the village, while the unimportant commoners are buried in the graveyard.

Outside their villages too they are accorded deference. It is not only their own villagers who must treat them in this way: all commoners must do so. They are accepted by the chief as important men and are treated as such.

The Headman's Installation Ceremony

622 The peculiar position of the village headman is brought out particularly in the installation ceremonies. When a headman dies his heir should not assume the name until he has been formally installed. This is expressed as 'to enter the name' (*kwinjila lina*). All installation ceremonies are similar and there are only minor variations from one ceremony to another. The following is a description of a succession ceremony recounted to me by an informant. It concerns the succession to headmanship of Cimombo, a headman of some rank in Nyambi's area. Cimombo had a village of 30 tax-payers, wore a scarlet headband, and had the right to hold a girls' but not a boys' initiation ceremony.

Some time had passed since the death of Cimombo, and his heir, though commonly known by that name, had not been officially installed. Eventually he grew impatient and went to his perpetual [1] elder brother Kaukutu of Nyambi's area, who also wore a scarlet headband, and told him that he was going to Cholo to find work. Kaukutu told him that he might visit the men at Cholo but he himself must not enter employment there. The heir left for Cholo. As soon as he had gone Kaukutu collected his relatives and discussed the succession. They decided to get

[1] The relationship between some personalities in the social structure, originally kinsmen, becomes fixed and is perpetuated by their successors. See p. 122.

2: Mitchell E-5 (1946-1949) 1956 FT7 Yao FT7

613 he cannot escape the fact that in his wife's village he is only
593 a 'billy goat' and that his 'true home' is in his matrilineal
606 village. The pull of the matrilineal village on him, therefore,
591 is always very strong and he is constantly trying to return there.
621 His wife's responsible relatives are constantly trying to avoid this because they know that in time they are likely to lose the children who will probably settle in their father's village if they grow up there. In general, therefore, a husband must have a very good reason before he can get his wife's kinsmen's permission to take her and her children to his village. His wife's relatives do not easily yield. But a headman must live in his own village so that nearly all headmen bring at least one of their wives into their villages. Other men sometimes succeed in doing so especially if their wives are past child-bearing, but it is typically the headman's wife who lives virilocally.

621 The husband's interest in returning to his matrilineal village
591 is heightened by the fact that a man in his wife's village is looked
554 upon as the typical man without prestige: a stranger, whose duty is largely procreative. The theme song at the installation ceremony where the husband was compared with a billy goat, and the common epithet 'chicken rooster' for a husband, reflect the attitude of the Yao towards him. In the song I quoted, the husband was said to be unable to climb high in his village of marriage, however rich he may become.[1] He is, nevertheless, an essential member of the village and the Yao say that it can succeed neither economically nor physically without his aid.

A husband becomes more important when he stays in a village for a long time. He becomes known intimately to the villagers and is conversant with their affairs. He is, therefore, able to advise on many private intra-lineage and intra-village affairs and may even become a marriage surety if there is no more suitable person available. Also in time the husband's position in the village changes. As his children grow up and become active members in the matrilineage, his position of husband becomes supplanted by his position of father, which, in a matrilineal society like that of the Yao, is significant in the same way as that of the mother's brother is in patrilineal societies.

593 The Yao recognize the close bond between father and child.
842 This bond is conceived to be both social and physical and is

[1] See Chap. V, p. 119.

3: Stannus D-5 (ca. 1912) 1922 FT7 Yao FT7

567 **Slavery.** Slaves were acquired by capture or purchase, or were received as payment. Prisoners taken by the vasaala of one chief in a fight with the partisans of another chief became slaves. Slave raids were also made by the Wayao upon the weaker Anyanja or again expeditions were sent out hundreds of miles away into the Chipeta country to buy slaves.

[422] Slaves were a man's goods and chattels, to do with mainly as he pleased, but no man might kill a slave without bringing the case before his chief and obtaining consent. While some were bought and sold and sometimes found their way into a slave caravan bound for the coast, many, perhaps the majority, lived the life of ordinary individuals in the villages. A man who was unhappy in a village and wished to escape from his vasaakdom might run away to another village and there commit some act so that he might be claimed as a slave. The custom was to go to the village and sit by the site of a house which had been pulled down after the death of the occupant, and the saying is, "He has been called by the dead man's spirit."

[554] Many a slave has become an important man in the village and slaves were often the trusted advisers of their chiefs, but there was no means of becoming a freeman. Neither a slave himself nor a second party could purchase his freedom. A slave capturing another man in warfare, for instance, could not ask for his own freedom in exchange for his captive, but anyone so taken became, in a way, the slave of a slave, and the master could not sell the second slave without the permission of the slave captor. An old slave might often be allowed to do just as he pleased and to all intents and purposes was a free man, but he was never actually freed. A slave might earn a return for work done for others than his master; part of this he would probably give to his master, but there was no regular tax upon such earnings.

The idea in accumulating slaves seems to have been to increase the population of the villages and hence their power and progeny. This is borne out by the fact that marriage [582] between free men and slaves was allowed. Marriage between a free man and a slave woman was unaccompanied by any ceremony and was therefore rather in the nature of recognized concubinage. Such a wife, if unsatisfactory, could be sold out of the village, but generally she was well treated. The children of two slaves were of course born into slavery; the children of a slave woman by a freeman husband, were not quite emancipated, as the father could not remove the child from the village of the slave mother's master, and in very extreme cases, it might be sold by him.

Women might marry slave husbands and often a master married his daughters to his slave men whom he thought well of. This amounted to a guarantee to the slave that he [421] would never be parted with. A woman with a slave husband could not leave him informally; she could not sell him, inasmuch as women have no property.

648 423 **Land Ownership.** The ownership of all land was vested in the chief, but he appeared to hold it in surety for all the people over which he ruled. Headmen had no land rights.

4: Stannus D-5 (ca. 1909) 1910 FT7 Yao FT7 Marevi FR4

case *mwavi* might be administered; if adjudged guilty the accused would be burned on a pile of wood. M 695

Evidence is given without taking any oath; a false witness is not punished. M 696

Justice is occasionally summary. At Mponda's, after conviction of adultery with one of the chief's wives, a man's throat was cut on the spot. Drowning was the usual punishment with Mponda.

Punishments for all offences practically meant payment.

CUSTOMS, SALUTATIONS, ETC.

The correct salutation among Machinga Yao and Mañanja on meeting is clapping the hands, the hands in front of and at right angles to the body parallel to each other, thumbs against the fingers. The clapping should be continued for ten minutes after having passed; after passing a chief it should be continued for half-an-hour. M Y 576

Another form consists in slowly beating the breast with the right hand, the head slightly inclined forward. The lower in station makes salutation first to the higher, a man to a chief, a woman to a man; exception is made in the case of an old woman, who is saluted by the man. Scattered all over the country a raising of one or both arms is a common form of salutation, but is probably only a corruption of the military salute. M Y [554] [888]

Slapping of the nates or thigh with the right hand is also seen, among old men usually. In imploring mercy from, or on the first occasion of meeting, the chief, a man lies prone on the ground and catching the foot of the chief, puts it on his neck—a sign of absolute submission. Women kneel at the approach of a man. Words and expressions of salutation are few—*Moyo* (=heart) being the only old expression used. Now commonly one hears a word (sounding like *mōné*) probably a corruption of good morning, and the Swahili greeting *Sukuhri* with the double hand-shake of Mohammedans. M Y [201] [562] [177]

A man returned to his village after an absence rests awhile, then his wife comes to him and kneeling greets him, *moyo*, her husband returning *moyo*.

Years ago, a man of any importance was received with firing of guns and shouting. A headman is received now with *Ntungululu*, the women wobbling their tongues in their mouths. Ashes are put on the head as a sign of joy. M Y [152]

In the morning the husband and wife do not greet each other, but in the village friends "give each other good morning" (=*Moyo*). On waking in the morning, a woman cracks all her joints (=*Kulisu chala*). She then massages her husband and cracks the joints of his fingers. M Y [512] [576]

One man wishing to see another goes to his house, and squatting outside the door cries "*Icho!*" three times (=there), at the same time clapping his hands. If no answer be given he goes away, even though he knows the man is within, no answer meaning that the inmate does not wish to be seen. If invited to enter he does so, the man of the house rises and gives him salutation. He makes small M 574 576

4: Stannus D-5 (ca. 1909)1910 FT7 Yao FT7 Maravi FR4

M Y 614 [579] Men of the same clan must help each other. Two men of different clans fighting will be joined each by men of his clan; such two men may be interfered with and stopped fighting by someone of the same clan, but not by others. A fight between men of different clans is a lasting thing, not so a quarrel in the clan.

Every clan has a (king) *Karonga* and a (prince) *Chilembwe*, who is his son. These grades are only found among the Nyanja peoples.

M Y [264] [554] The Karonga may break bones when eating—this is significant of his power to break anything; the Chilembwe may not do so, being without land. Neither may eat while walking. These two are always chiefs.

Clan names.—In Machila men's songs one hears a number of clan names repeated sometimes.

After sneezing people sometimes exclaim, "*Mwana wa* . . .; *Mdzubulu wa* . . .; *Kubala kwa* . . ." (giving name of clan).

A man hearing another say this asks him, "Where do you come from?" He tells him, giving him names of his father and mother, etc.; if he does not know them he gives names of generations before.

The following are a few clan names:—

Achitolo, small rat.	*Achimaunde*, cloud.
Anamvula, rain.	*Amwali-mgosi*, hartebeeste.
Azimbiri, puff-adder.	*Anbiwi*, pig.
Achikalembo.	*Ang'oni*, birds.
Achikalélla.	*Achiwombe*, fish.
Achingumina, thunder.	*Achinawombe.*

MARRIAGE.

M 584 A man seeing a girl he would like to marry deputes his brother to go to the brother of the girl, who then calls the girl's maternal uncle, and he speaks to the mother on the subject. The mother consults the girl; if she refuse, nothing further is done. If she consents, the man calls his relations to come and be witness of his taking the girl as his wife; they meet in the *Bwalo*. A house is assigned to the M 585 man in the village of the girl and there they go to live.

After six months the mother of the girl prepares beer. The uncles of the young couple, mothers, fathers, sisters, and brothers are invited. The girl's maternal uncle then speaks, addressing himself to the maternal uncle of the husband, saying, "We have called you here to drink beer and to see the house of your brother that you may return when you like. Should anything arise between these two newly married ones in the nature of a dispute, let them come to their respective uncles about the matter."

Then five pots of beer are drunk in the village, two are reserved for the witnesses to drink in the evening, and one for the two fathers and the headman.

5: Mitchell E-5 (1946-1948) 1949 FT7 Yao FT7

COO authorities to-day: those of the British administration. Yet the headman is a key official, if usually unpaid, in that administration. For example, he has to report suspicious deaths and illnesses and strangers, and he has to see that his villagers keep the village clean, hoe paths, use latrines, follow agricultural and veterinary regulations, pay tax, &c. He is no more ready than they are to accept these as good, but he tries to enforce the rules for he is liable to be punished if he does not, by fining, imprisonment, and ultimately deposition. As he applies these unwelcome and unaccepted rules, his position becomes subject to still greater strains.

II. THE YAO OF SOUTHERN NYASALAND

J. C. MITCHELL

567 554 THE Yao people were notorious at the end of last century because of their reputation as slavers. Livingstone had noted their close association with the Arabs in this trade and much of the effort of the early administrators of Nyasaland was directed to suppressing the slaving activities of the Yao. While the slave trade has been fairly well studied, the associated but different phenomenon of domestic slavery has not been nearly so thoroughly investigated. It seems that domestic slavery was an important part of the Yao social structure in those days, before the coming of the white man abolished at one stroke this and many other social institutions. But, though the institution of domestic slavery ceased to exist, the system of values upon which it was built still survives and still affects the social structure of the modern Yao. We might summarize this system of values by saying that the status of a man depends on the number of people over whom he exercises certain rights and for whom, in turn, he is responsible. In the past, a man could increase his status in the community by acquiring slaves. This he did by buying them with calico obtained through the slave trade, or with ivory, beeswax, tobacco, and other natural products; by taking them in compensation for the death of a relative; or simply by kidnapping them. Slaves were often taken as spouses by the members of the group over which the man exercised his command, or by the man himself as wives, and thus the group was further enlarged by natural increase. Though these slaves and slave-children had fairly well-defined rights, they were not free to leave the command of their owner, and the group was from that point of view a stable one. The leader's command over his matrilineal and other relatives, however, was not so absolute and it is with this aspect of the social structure that I am here concerned. This system of values still persists and forms the basis for evaluating the status of men in the Yao community. [622] The high status of a village headman is usually expressed in such terms as: ' He is a big man—he has many people ', or ' he has many huts '. The village headman himself and the men under him are motivated by the same system of values so that in any village at any time there is a balance between the desire of certain members of that village to break away and establish units with their own dependants, and the desire of the headman to retain those people under his charge.

622 554 578 The tensions that exist in this situation are well recognized by the Yao and they always express them explicitly during the ceremonial succession to village headman-

ship. The difficulties of his position are brought home to the neophyte village headman in speeches made by old and experienced men. On one such occasion I heard a man say, 'Some men who marry into a village are bad and can split a village like this one by telling lies to the headman, saying that his sisters are talking behind his back and are insulting him. When a headman hears all this he might break his village by ill-treating his relatives, thus causing himself to be left all alone.' In this way the headman's responsibility for maintaining harmonious relations between the members of the village and himself is emphasized. His failure to do so results in what they call a break in the village—the departure of some of the members to live elsewhere—which is a severe blow to the status of the headman. In fact, he is dependent on his dependants for status, and the Yao are quick to point this out to neophyte headmen, saying, 'A tree cannot grow without branches.'

We can better understand the situation if we consider the social structure of the Yao village a little more closely. The Yao are a matrilineal people and are dominantly matrilocal. They live in small groups of huts scattered fairly evenly over the country and from a few hundred yards to possibly a mile or so apart. Such clusters may contain as few as five or as many as sixty or more huts, occupied by between 20 and 200 people.

These people are almost always kinsfolk, and in the smaller villages they are usually all either matrilineal descendants of a common ancestress or their spouses. In the larger groups there is a more complex situation which I shall analyse below. In the simpler groups there may be no male matrilineal descendant in the village and the leadership of the group is taken over by a senior female descendant of the founder of the village. Usually, however, if the group is large, one of the male matrilineal descendants lives patrilocally in the village and assumes leadership.

The relationship between a male matrilineal descendant and the female matrilineal descendants who are in his charge is signified by the word '*mbumba*'. The word particularly refers to the relationship between a man and his sisters and I have therefore translated it as 'sorority-group'. It includes a man's full sisters, matrilineal female collaterals (whom he calls sisters), their female children, and the female children of those female children, and so on. It is usually used in the sense of 'somebody's sorority-group'. A man belonging to the descent-group of the sorority-group may refer to these women as 'our sorority-group'. The man who is in charge of the sorority-group is referred to as the *ayeni mbumba*. This could be translated as 'owner of the sorority-group' but because of the property associations with the word 'owner' in our language, I have instead translated this as 'warden of the sorority-group' which expresses more accurately the relationship between a man and his female relatives. Even in those groups where there is a female in charge of the village and no male matrilineal descendant is resident in the group, there is usually some one man, possibly married in some other village, who is warden of the sorority-group. The warden of a sorority-group has certain precise duties to perform on behalf of his charges. First, he is concerned with the good relations between members of the sorority-group and with other such groups. He has to settle most of the domestic quarrels that take place between members of the sorority-groups. Second, and this is considered to be a most important function, he is the person who is the

marriage-surety for the marriages of the members of the group. Briefly this means that he must be approached before a marriage can be legally contracted by any member of his charge, he or his representative is present at the ceremony which formally announces the marriage, and he is responsible for the behaviour of his female relative in that marriage. Third, he is immediately concerned with the physical welfare and health of his sorority-group. He must track down the sorcerers causing their illnesses and supply the medicine to heal them. He has to arrange for the ritual purification of mourners after the death of one of the sorority-group's members. Fourth, he must be present in the court-house if one of his charges is involved in a case and he is usually looked to for the money for the fine. I have known a case not to begin because the warden of the sorority-group was not present. Frequently if the husbands of the female members of his charge default, he has to provide the hut-tax money.

Usually the warden of the sorority-group is the eldest brother of a group of adult full sisters. The younger brothers of the group of sisters, while concerned with their welfare, do not stand in this particular responsible position. They refer to the sorority-group as ' our sorority-group '. The elder brother refers to the sorority-group, be it noted, as ' my sorority-group ', and this sets him over and against his younger brothers. The position that the warden holds, however, is not rigidly fixed, for a younger brother may assume control of the sorority-group if for some reason he is dissatisfied with the way in which affairs are being conducted, and is able so to assert himself.

If we recall that the status of a man in a Yao community is determined by the number of dependants that he can command, it is easy to see that relationships between an elder brother and his younger brother are distinctive. The elder brother is responsible for the actions of his younger brother in much the same way as he is for one of his sorority-group, and the younger brothers have a great emotional attachment to their older brothers. Yet at the same time the elder brother stands in the way of the younger brother in his striving for status, in that while the elder brother is warden of the sorority-group the younger brother cannot be, and therefore cannot have dependants and status. It is not surprising to find that accusations of sorcery are frequently made between brothers and the result often is that the younger brother takes the sorority-group away from his sorcerer brother to some other place and sets up a new village with it. Therefore, one possible source of instability in a Yao village lies in the operation of the kinship system in a system of values which reckons status by adherents.

I have thus far been describing the simpler types of village. In the larger groups it is common for the warden of the sorority-group to live in the village where his sorority-group is. Then he usually brings one (or sometimes more) of his wives to the village, where she lives patrilocally. The daughters that are born to her do not return to the sorority-group from which the headman's wife came but marry and set up households near their mother in the village of their father. Thus there develops in time a second sorority-group in the village, alongside the first sorority-group, and related to it through the headman. At this point we may say that the man's position has changed from that of headman of a village containing a single sorority-group, to the more complicated and less secure one of village headman over a more hetero-

621 'In 1946 village A had about 30 huts in it. A certain man B was the son of the
622 previous headman called A_1 and hence mother's brother's son or cross-cousin of the
578 present headman called A_2. B had two wives living patrilocally and while B was
684 serving in the Army he had a letter from one of his sisters (i.e. his mother's brother's daughter or cross-cousin to the headman) to say that A_2 was sleeping with B's wives. When B returned he started making inquiries from his wives and he eventually secured a confession from them. B then went to a man called C, who stood in the relationship of mother's brother to the original A_1 and complained about the behaviour of the village headman. C also instituted inquiries and ascertained that it was true. C then approached a local headman of some standing (whom I shall call D) and asked him to arbitrate in the case. D pronounced A_2 guilty and awarded compensation of £6. 10*s*. to B. B, however, refused to take the money, and said that he wished to leave the village. D observed that he had every right to do this and that A_2 had no right to complain 'since he had broken the village himself'. B took his sorority-group, who occupied about twenty of the thirty huts, to a place about thirty miles away and set up a village of his own. The sorority-group of the village headman A_2 remained behind in the old village.'

This case illustrates the points that I have made. It shows how the two groups in this village stand opposed to each other in that B's sister wrote to tell him of A_2's conduct. Also when the village did break up it did so along certain very clear lines of genealogical relationship. Second, it illustrates the operation of the desire for dependants in that B refused what by Yao standards is a very large sum of money for compensation and preferred to move off and establish a village of his own. This attitude is also shown by the arbitrator who takes the point of view that regrettable as it is, the village must in the circumstances split, and while he appreciates the headman's feelings he makes it clear that the headman has no one to blame but himself. Third, it is interesting to note that this split took place after the death of the old village headman when the personal ties with both opposed groups were severed. Though the new village headman A_2 assumes the kinship terms of his predecessor and also calls the children of A_1 'children' yet in fact he is their cross-cousin while the old village headman was their father.

622 The position of the village headman in Yao social structure may be summarized
554 thus: the village headman is the leader of a group which may be a simple kin-group
621 or a composite group of two or more opposed matrilineages linked to each other through himself or one of his predecessors whom he represents to them. The numerical size of the village determines the status of the headman, but the size that it can reach is limited by an immanent instability in the kinship structure which is expressed, in terms of their status system, first, in the competition of brothers for the wardenship of the sorority-group, and second, in the competition between the headman and the wardens of the patrilineally linked sorority-groups, who wish to set up villages of their own.

621 The Yao see villages as units and this is clearly shown at the initiation ceremonies
881 of boys, when the initiates are kept in grass-sheds, each partition of which refers to a particular village. In the same way a person is identified as belonging to a particular village known by the name of the village headman. Thus a man might say: 'I come from Kumpumbe's village.'

Village headmen themselves are graded in importance and there are certain marks of rank which distinguish the more important headmen. We have already examined one of the most obvious ways in which the village headman's importance is judged, that is, by the number of people in his village. In addition there are other ways in which village headmen may be distinguished both from the common people and from less important headmen. Thus, for example, some of the more important village headmen have the right to conduct initiation ceremonies, this right being granted to them by the man who is in a way the most important village headman of all—the Chief. The right to hold a boys' initiation ceremony (*lupanda*) is of more importance than the right to hold a girls' initiation ceremony (*ciputa*). Yet another mark of rank is the right to wear a plain crimson band around the forehead (*mlangali*), this right also being granted by the Chief. 622 554 881

The Administration has recognized the more important village headmen and has entrusted to them certain duties. By no means all the people called 'village headmen' in this paper are recognized as such by the Administration, but I do not know of any person who has the right to wear a red band and is not also an Administrative village headman. 622 554

The status system has apparently been taken over from pre-European days, but it is uncertain to what extent these important village headmen had powers. Some to-day have all the marks of rank that the Chief has, i.e., they hold both boys' and girls' initiation ceremonies, are entitled to the special greeting accorded to important village headmen (*sukulu*), wear a red band, have the right to be buried in the village and not in the common cemeteries, and to have their bodies prepared for interment by people of similar rank. It appears that such people exercised a certain amount of power, by reason of their personal qualities, over less powerful neighbours, and some were able in the past to demonstrate their autonomy by moving off to establish petty chiefdoms of their own.

Nowadays the Administrative village headmen have certain statutory duties to perform towards other minor groups actually independent but considered, for the purposes of the Administration, to belong to the village. The relative importance of the headman is still the deciding factor in such questions as determining who is to be called in to arbitrate in a case. Thus, though for Administrative purposes a small village may be considered to be a part of a larger Administrative village under an Administrative village headman, yet when a case for arbitration occurs within that smaller village, some other person than the Administrative village headman may be called in as arbitrator. 622 554 631 692

Laws promulgated by the Administration are conveyed through the Chief to the Administrative village headman and in this way a hierarchy of power is being introduced. The small village headman now sees the Administrative village headman as a representative of the Chief and the Administration. The Administrative village headman in turn sees the Chief in this light. But in matters directly affecting the Administration, the small village headman also sees the Administrative village headman as his own representative *vis-à-vis* the Chief and the Administration. 622 631

In general the village is by far the most important corporate body in the social organization of the Yao, not only as a significant primary group but also as an element 621 622

6: Mitchell E-5 (1946-1947) 1949 FT7 Yao FT7

IT SHOULD

162 be noted that only 27—11 per cent. of the whole sample of 246 women—had never
589 married and that 23, 80 per cent., of these (or 10 per cent. of the total) were under the age of 20 and therefore stood a good chance of yet marrying. Furthermore, 2 of the 4 women over 20 who had not married were known definitely to be incapable of marrying (one is insane and the other has violent epileptic fits).

There were 53 women who were divorcees or widows (21·5 per cent.), but it should be noted that 27 (or 11 per cent. of the 246 women) were over the age of 45 and therefore were past, or nearly past, the child-bearing period. Those in the younger age-groups stood good chances of remarrying. Table IV shows that though
[586] the divorce rate is high[1] remarriage is common. By the time a woman's child-
[587] bearing period has ended she has been married on the average 1·7 times. Few marriages are contracted after child-bearing ceases.

TABLE IV. *Marriages and Dissolutions of Marriage experienced by all Women over the Age of 13*

162
586
587

Present age	*No. of women*	*No. of marriages contracted*	*No. of divorces experienced*	*No. widowed*	*No. still married*	*No. of marriages per woman*	*No. of divorces per woman*	*No. of marriages per woman ended by death of husband*	*No. of marriages per woman still existing*
13–20	45	22	1	..	21	0·49	0·02	0·00	0·46
20–30	79	104	36	4	64	1·32	0·45	0·05	0·81
30–45	70	122	50	16	55	1·73	0·71	0·23	0·79
Over 45	52	88	29	34	23	1·70	0·57	0·65	0·48
Total	246	333	116	54	163	1·36	0·47	0·22	0·67

842 These statistics, showing the early age of marriage, the early commencement of child-bearing, the high incidence of marriage among women, and the high rate of remarriage during the child-bearing period, all point to the high valuation of
[182] reproduction reflected in Yao culture. This is consistent with their social structure,
[61] where the major corporate groups are kinship groups and reproduction is the principal method of recruitment to the group. Furthermore, because the standard of living is almost at subsistence level, children do not entail the economic losses
[593] they do in Western society. On the other hand, they are expected to support their
[888] aged parents when they themselves are economically independent. In other words, there are few factors militating against reproduction and many in favour of it.

554 We may expect the beliefs and customs surrounding child-birth to reflect the value
884 of reproduction. For instance, the Yao distinguish clearly between women who have
[182] borne children and those who have not. When a girl becomes pregnant for the
[842] first time she undergoes a special ceremony (*litiśo*) attended only by women who
[843] have borne children. This ceremony has many of the features of a *rite de passage* and appears to mark the passing of the woman to a new social status. Furthermore, women are ascribed status according to the number of children they have borne. The word *anwali* signifies a young woman who has not yet borne a child; *anwali*

[1] Between a third and a half of the marriages contracted by women had been dissolved by divorce by the time that the child-bearing period had ended.

ndembo, a woman who is pregnant for the first time;[1] *kacembere*, a woman who has one or two children; *mjembere*, a woman who has three or four children, and lastly *ndolwa*, a woman who is past child-bearing age.

The information which I have been able to collect on abortifacients and contraceptives suggests that they are not used by married people merely to prevent their having more children, but that they are used by people who wish to avoid pregnancies which would be embarrassing, for example, by a woman whose husband is a labour migrant. To what extent the abortifacients and contraceptives are efficacious I cannot say; some, I know for certain, rely on a magical principle, for example, the medicated cord worn by a man during intercourse. On the other hand, the abortifacients taken orally may have some active ingredient.

A barren woman or an impotent man is regarded with some embarrassment and the marriage sureties (*ariusumangusipe*) of a childless couple will go to considerable trouble and expense consulting diviners and leeches in an attempt to make their wards productive. Childless couples are regarded as not fully adult and are treated in a patronizing way by those who have borne children. Since a man may marry other wives, barrenness in a woman is a cause of sorrow to her husband, but is not in itself a ground for divorce. Where the man is impotent, however, the woman may divorce him on this ground, though she usually takes a paramour and forces her husband to an action for damages which automatically leads to a divorce because it is the usual practice in these cases for the court to ask the woman if she wants to be divorced from her husband.

In contrast to the satisfaction shown at the birth of a child is the sense of awe evinced when a child is still-born or the woman miscarries. The Yao do not distinguish between still-births and abortions, both events being known by the word *kwasanga*. This is a verb and refers to the process of abortion; there is no term for the dead foetus itself. I made no attempt to enumerate miscarriages and still-births because they are supposed to be due to breaches of sexual taboos on the part of the husband and wife, and interviewees were naturally reluctant to mention them. Miscarriages and still-births are greatly feared, and the woman is considered to be in a very dangerous condition until she and her husband have carried out a ritual purification. Should a man have intercourse with a woman who has miscarried and not yet been purified he will contract a disease called *lwaso* which is believed to be invariably fatal. Still-born children or aborted foetuses are buried in a hole dug with sharpened sticks in the bush by the women, whereas children who are born alive and die afterwards are buried in the graveyard in graves dug by men with hoes. The burial spots of still-born babies or aborted foetuses are marked with a stone or broken pottery, since it is believed that to step on them will induce an illness.

The concern of the interested kin-groups is shown in the child-birth procedure. Birth normally takes place in a hut in the presence of the older female relatives of the woman and the female representatives of the man. The husband's representatives are necessary because the Yao, like many other Central African peoples, believe that an adulterine child will not be born to the woman unless she confesses (*kupara*) the name of the genitor. If she persists in concealing the identity of the genitor, they

[1] *ndembo* = elephant, hence ivory. The terms *ditibo* and *ndembo* here both refer to the ivory beads traditionally worn by the woman in the pregnancy initiation ceremony.

7: Hetherwick M-5 (ca.1900) 1902 FT7 Yao FT7

with the dead. He approaches the shrine, opens the gate of the fence, takes a pot'ful of beer and pours it into the pot at the head of the grave. Next he places the basket of porridge and the plate of meat on the mound beside it and retires. Kneeling down outside the gate facing the shrine and a few yards in front of the people he chants his prayer in a monotone, each petition commencing with "Chonde, chonde," "Please, please." All the while the people clap their hands in unison with him and sing the response as they do in a native case in the chief's court. 769

When the offering has been made at the grave, the rest of the beer or other food is consumed by the worshippers. Guns are fired as a token of respect to the dead, and the rest of the day is spent in dancing. [535]

Such shrines are to be seen in almost every Yao village where the inhabitants have been located for any length of time. They are regarded with awe—the little boys as they pass whisper to each other in a warning tone, "masoka." Should the village be moved to any other district, the old shrine is not forgotten. Periodical visits are made to it with the usual offerings. In cases where the old house has been occupied by a people hostile to the old inhabitants, such visits are usually made during the night, and the people awake in the morning to find that the old chief's grave in their midst has been newly repaired, and a fresh offering of food placed at its head. 778 769

Sometimes such shrines are found on the summits of hills which once may have been a refuge from the enemy in time of war, but which now lie lone and deserted. Thither in their need the people make their way with their offering of food and beer, and their prayer for rain or suitable weather for the crops. Near Blantyre such shrines are to be seen on the tops of Mount Sochi and Mount Michiru. The former is the abode of the spirit of Kankhomba, and the latter of Mpulale, both old Maravi or Mang'anja chiefs who doubtless fled there seeking safety from the war of the invading Yaos, and died leaving their souls to be the *mafungo* or spirit of the mountain. Some years ago, during the fear of an Angoni invasion, the Yaos of Mount Sochi fled to the hill-top for refuge, and there the old chief Kapeni died. He was buried close to the grave of the old Kankhomba, and now, when the Yaos on Sochi make an offering, it is to the spirit of Kapeno that the homage is paid, and the shrine of Kankhomba lies neglected.

Only the graves of chiefs or headmen are thus treated as shrines of worship. The burying place of slaves and the common people lies away in the thick bush, where only the rank grass or the thicket of old trees marks the spot. No offerings are ever taken there, for such as are buried there can have no influence in the spirit world. The dead are buried, the broken pot or basket is left on the grave to mark the spot, and none ever seek to go there save to lay another in the same neglected ground. 554 764 769 778

II. But the word *mafungo* is used by the Yao with a wider application. Etymologically the word is connected with the root *bafungwa*, which in so many of the other branches of the Bantu tongue appears as *bafu* or *bawa*, and signifies "great" or "old." It is the same root which appears in the Kafir word for God, 776 197 192

chief, his sister's sons and his younger brothers.

Besides the councillors, there were a number of officials known as *mapungu* (sing. *lipungu*), which term I translate as court assessor. These officials have often been confused with the councillors, though they were a completely different set of officials. They were not necessarily village headmen though councillors were always so. Also the position of the court assessors, unlike that of the councillors, was not hereditary. Court assessors were chosen because of their wisdom and debating ability and often slaves were appointed. Councillors were chosen because of their general status in the community and once chosen tended to be succeeded by the heir, who for all intents and purposes, socially replaced his predecessor. The court assessors lived at the court of the chief and they were the correct channel of approach to him. No one could approach the chief without at first approaching a court assessor and reporting his business. The assessor's more important duty, however, was the sifting of evidence in cases in which the chief was arbitrating. The court assessor then recounted this evidence to the chief who delivered his opinion and awarded compensation.

In general the picture that we have of the political organization of the Yao before the Whites came, is that of a number of leaders of kinship groups, who by acquiring sufficient dependants and slaves were able to maintain a certain level of power. Certain groups of them were under the power of more influential leaders (the chiefs) who usually had sufficient resources to send trading caravans down to the coast, which in turn maintained his power over his neighbours. In this loose po. tical organization the importance of being able to control dependants was cardinal and the adage "a chief without people is nothing" (*mcilambo nagu ngunakola ilunda, ngunamu mcilambo!*) sums up the situation pithily.

563 groups presents a problem to be considered but for the main purposes of this paper a brief comment is sufficient.

The Nyanja people who were allowed to remain in the areas continued to live in their village communities in much the same way as the Yao did. In fact the Nyanja and the Nguru are so similar in culture to the Yao, that it was possible for them to fit into the Yao social structure fairly easily. For example, in Mposa's area Mbande and Mbeta are recognized by the local Yao sub-chief as important personages since they were the indigenous chiefs in the area before the Yao came in as invaders. Both, for example, have adopted [554] the Yao practice of wearing a red band round the head to indicate rank. Both have the right to conduct the Yao indigenous initiation ceremonies. At one meeting I attended Mbande was allowed [554] to sit in a chair while the only other person to do so was Mposa himself. This is a mark of honour since no commoner is allowed to sit in a chair in the presence of the chief.

In the same way the Nguru immigrants have come in small groups of matrilineal kin and have settled either in hamlets alone or set up small hamlets in close vicinity to kinsmen. Their headmen in turn have been absorbed into the general political structure though they have their own language and distinguishing cultural traits. Thus some Nguru initiate their boys according to their own *cidototo*, though others will allow their boys

[Text continues top of P. 151B]

V. THE POLITICAL STRUCTURE

642 177 The accompanying diagram is designed to summarize the main types of interaction that take place in the political structure of the three areas. Interaction between the social personalities in the political structure can be said to take place in reference to certain sets of values. One set of values is that which the Yao recognize and believe to belong to the White people. Another set of values they recognize and subscribe to as their own. A chief may interact with a village headman because he has broken a regulation which

[Text continues bottom of P. 151B]

648
642 who are, to them, innocent. The diagram has been divided obliquely to represent these two
177 systems or fields of values. The division of the diagram into two parts depicts a major rift in local political relationships. While some political relationships, as say between village headmen, do not directly manifest this cleavage, in most, as say the chief with his subjects, though the Whites are not present in person, they are there in the context of the interaction. This will become evident as the analysis proceeds, but at this point it is sufficient to observe that the Whites and the White system of values are an integral part of the modern Yao political organization.

642 In addition to this, there is a hierarchy of status
177 roughly conforming to the placing of the social personalities in the diagram, i.e., the White
534 Administrator is of higher status than the African
648 Civil Service which is roughly on the same level as the chiefs, but both are on a higher status than the Native Authority's clerk and officials are. The lines represent the main direction of interaction.

648 1. *The White Administrator and the African*
563 *Civil Service*

By the White Administrator I mean the District Commissioners, Agricultural Officers and other Government officials who come into contact with the African populations, particularly in the rural areas. The social distance between a White person in general and the Africans is much larger than that between, say, an African chief and his meanest subject. Social interaction on an intimate basis cannot take place between chief and Administrator mainly because their relationship is dominated by the pattern of all South African territories, where White does not interact intimately with Black. I have already stated that not many Europeans come into the area. Those Whites that do come into the area are immediately accorded the status of an Administrative Officer and are apt to be thought of as such, though they may not be so. The Yao clearly recognizes that the Labour Recruiter is a different sort of person from the Missionary and both differ from District Commissioners, but

622 Administrative village. The N.A.'s bureaucracy considers him responsible for the collection of the taxes though, of course, the legal responsibility rests on the tax-payer. The village headman is generally responsible for the various regulations that the villagers must carry out. In practice the Administrative village headman may be in charge of a single kin-group and thus have a certain amount of control over the villagers because of his kinship with them. More frequently, however, the Administrative village headman is also in charge of a number of other hamlets, sometimes completely unrelated to him but who happen to have been assigned to his jurisdiction. He then delegates the responsibilities to the headmen in charge of the hamlets.

622 554 The Yao judge rank among the village headmen largely in terms of historical antecedents and by the number of dependants that a village headman has. While a certain village headman may be ranked fairly highly in the status system because his ancestors were closely associated with the ancestors of the chief, he may not now have many villagers around him. A newcomer to the area however, can only become notable by acquiring sufficient followers to make him a man of considerable power. Associated with rank are the various insignia that I have mentioned, i.e. the right to hold initiation ceremonies, the right to wear a red band round the head, etc. The competition among village headmen therefore, is phrased largely in terms of competition for these particular insignia of rank. They strive to be recognized as Administrative village headmen—"to have a book" as they say, since this at once means that they will receive a remuneration for work which they would have to do anyway, and it also means that they would be recognized as village headmen in the eyes of the White Administration. Village headmen also compete with each other to have the right to hold initiation ceremonies and use the threat to move out of the chief's area to bring pressure to bear on him to force him to grant the right.

692 While domestic quarrels are usually settled by the kin-group leaders and by the husband's and wife's parties conferring together, differences out-

2: Mitchell E-5 (1946-1949) 1956 FT7 Yao FT7

439 that the Yao occupied in Central Africa as middlemen and traders. As far back as 1798 Laçerda described the Yao rôle as active traders. They bartered ivory, slaves, beeswax and tobacco with the Arabs along the East Coast of Africa for guns, gun-powder, cloth and beads. We cannot easily estimate what proportion of the population was engaged in whole-time slaving and trading. The larger proportion must have found it necessary to cultivate their gardens of finger-millet and sorghum in the rainy season to supply them with the major food crops. It seems likely that slave-raiding and trading were occupations mostly followed during the dry season.

The Yao therefore had become accustomed to a variation of activities and division of labour, at least a century before the Whites came to Nyasaland. Their wants at this time had already become sufficiently diversified to include cloth, beads, gun-powder and guns. All these trade goods are more durable than the foodstuffs which are the measure of wealth among a people who support themselves entirely by their own produce. But the individual want for these trade goods was limited, and the Yao used their surplus rather as capital for trading farther inland with other tribes.

436 There is considerable evidence, both from my informants and
439 the writings of early travellers, that these trade goods—ivory,
567 cloth and slaves—came to be used as currency, and most people recognized a fixed relationship between the three commodities. A female slave could be exchanged for an amount of calico or ivory that was constant over fairly large parts of Central Africa; the value of a tusk of ivory could be expressed in calico in the same way. By enterprise, therefore, in trading and raiding,
439 an individual could accumulate wealth in the form of calico, guns,
556 beads, ivory or slaves. But the personal consumption of trade
567 goods is of necessity limited, so that the Yao preferred to accumulate their wealth in the form of slaves. The reason for this lies in the general political structure of the early chiefdoms, which I describe later. Slaves were not only labourers and serfs; they also increased the military and political power of their masters. At the same time slaves could be sent to the coast in a caravan and bartered for cloth, or, since they were always prized, they could be used to settle claims for compensation from aggrieved neighbours. The slave trade therefore, although related to domestic

2: Mitchell E-5 (1946-1949) 1956 FT7 Yao FT7

slavery in that a trader could at any moment send some of his own slaves to the coast, was actually quite a separate institution.

Although the advent of the White Administration stopped both domestic slavery and the slave-trade to the coast, both of which were vitally important elements in Yao economy, it did nothing to decrease or reduce the variety of the wants of the Africans. On the contrary, it obviously increased those wants. The missionaries, who were the first Whites to settle in Nyasaland, were forced to import large quantities of cloth and beads so that they could buy foodstuffs and pay their labourers. They quite unintentionally, therefore, became competitors with the Yao in this trade. By some accounts their goods were both superior and cheaper. As early as 1878 the African Lakes Company was sponsored by the Church of Scotland Mission, so that it could take over the trading part of their dealings with the Africans. The planters and traders who began to settle in the highlands after 1890 brought more and more cloth, beads and other trade goods into Nyasaland to pay wages and buy foodstuffs.

When the Protectorate was proclaimed in 1891 and the Administration started to put down domestic slavery and the trade in slaves to the coast, the monopoly of trade in goods fell directly into the hands of the Whites. After 1893, when coinage was introduced, the economy of the country rapidly changed from one based on barter with slaves and ivory as the main outgoing commodities, and slaves, calico, beads and brass rings as the incoming commodities, to an economy in which the wants had become even more diversified. In 1895, the *British Central African Gazette* could record:

> The wants of the people of this part of the world not long ago were limited to sufficient calico to clothe the family, but in one short year their wants now include boots, size and quality a minor point, turbans, coats, and in fact at a distance the half-naked native of yesterday has the appearance of Sikh soldiery.[1]

That the Yao took to the use of money is illustrated by the Acting Commissioner's statement in 1897: 'The Yao thoroughly appreciate having a currency. It has proved, in fact, a great step towards civilizing the native of this part of Africa. He is now able to accumulate his earnings, which formerly in the days of a

[1] Vol. i, 2 (Sept. 26th, 1894).

2: Mitchell E-5 (1946-1949) 1956 FT7 Yao FT7

village headman and had to administer his slaves and relatives in his village in the same way as a village headman.[1] MacDonald shrewdly observes: 175 578 622 643

> Where the chief sees occasion to interfere with his subordinates he generally consults his own interest. He will say to a headman, 'I see that you have been behaving badly to that subject of yours. You cannot get on with him: he must leave you and come and dwell in my own village.' The chief thus secures another servant.[2]

Another writer observed, 'As a chief's power consists of the number of his subjects the loss of a man is a serious matter.'[3] 175 622 643

A village headman also tried to strengthen his position against the chief and against other village headmen by attracting to himself as many followers and dependants as he could. The process whereby a man might increase his status is described as follows: 556 567

> However large the settlement may become, the man that is first in the field is the chief or headman. In course of time he adorns his position by acquiring wealth. He may shoot some buck and get possession of their skins. With these he goes to the Mangoni country and buys slaves. An old person he obtains for a single skin, but a young slave costs two, and women cost much more than men. The female slaves thus bought are his junior wives and he keeps them busy in hoeing the farm, and all such female duties. The male slaves he employs in farming, building, making baskets, sewing garments and such masculine pursuits. He keeps all these persons strictly at their duties, and at the same time welcomes an opportunity of selling them at a profit. If his daughters were unmarried, he would give them slave-husbands. The natives aim at 'replenishing the earth and subduing it'. As it is no expense for them to rear families, they are all desirous to have many children.

Besides this increase of the village from the chief's own resources, there may be an accession of freemen. After the settlement is begun, a man may come to its founder and say, 'I wish to live with you.' The village chief gives him permission and calls him 'younger brother'. The newcomer brings his family, builds a house, and cultivates a farm in the same way as his chief. A freeman may leave his present chief and take up his abode with another, whose subject he becomes. His former chief has no longer any authority over him 175 622 641 643

---

[1] MacDonald, *Africana*, i, 154. [2] MacDonald, *Africana*, i, 155–6.

[3] Hynde, R. S., 'Among the Machinga People', *The Scottish Geographical Magazine*, viii (1891), 656–63.

2: Mitchell E-5 (1946-1949) 1956 FT7 Yao FT7

amongst the Yao. The religious sanctions behind tribal initiation ceremonies were weakened when many of the village headmen adopted Islam, and the rights of holding the Islamic equivalents fell to commoners who were leading Moslems. Thus for many village headmen the significance of the holding of initiation rights fell away. The White Administration has introduced new political personalities into the field, such as the court clerk, the court sergeant and other members of the chief's bureaucracy. These persons have been able to acquire peculiar positions of power in competition with the chief's traditional advisers.[1] Some wealthy individuals are able to wear better clothes, build better houses, and have more personal attendants, than the chiefs. For example, there is a carpenter in Kawinga's area living near an Indian store,[2] who is wheeled about in a garetta (ricksha) as the chiefs are, and who dresses far better than any of the chiefs.

But these changes have not yet affected the pattern of social relationships appreciably. Up to the present as new elements were introduced into Yao social structure they have been absorbed in terms of the traditional structure. The traditional chiefs, therefore, became the Principal Headmen when White Administration was imposed on them. Village headmen, no longer able to compete with each other in terms of followers and slaves, now began to vie with each other for 'books'. Important village headmen became the Moslem leaders, and the larger mosques were built at their villages. The chiefs, by virtue of their annuity from the Government, are able to maintain a higher standard of living than most of their subjects: they build burnt-brick houses, they wear finer clothes, they are wheeled about in garettas or, latterly, are pillion passengers on bicycles pedalled by retainers. By using their annuities as capital, they have been able to grow more tobacco than most of their subjects and so still maintain economic ascendancy over them.

So that until 1949, at least, in spite of the introduction of

[1] cf. my 'The Political Organization of the Yao of Southern Nyasaland'.

[2] He does not live in a village as most people do; he is an Nguru, and has none of his relatives near him, which is significant. His relationships with his clients are formal and transitory and he is not bound by traditional kinship ties. He therefore attempts to achieve prestige through conspicuous expenditure.

3: Stannus D-5 (ca. 1912) 1922 FT7 Yao FT7

generous and popular, the donations may mount up to a useful sum. Dancing goes on late into the afternoon when all return to the village. 843

The man may not speak to his guardian again until after the birth of the child. The two women guardians, the *nkamusi* and the *nakanga*, as a rule cease sexual intercourse with their husbands during the same period or, at all events, during the last month before the birth of the child.

The child born of a woman who has not gone through *Lilivao* is buried alive. [847]

Chieftainship. The Yao when they migrated to their present country were headed by a number of their chiefs. These eventually settled in different areas adjacent to one another, each ruling over a considerable tract of country. The chief was supported by a number of headmen, each of whom looked after a village; the chiefs and headmen in turn being assisted by the village elders. 622 643

Often among a chief's counselors one found a number of his relatives, and sons and brothers were often made headmen. A man assuming chieftainship often had to dispose of a brother of whom he was afraid. 643

Chieftainship is hereditary, the chief's name being passed on to each successor. Succession is to eldest son of the eldest sister or a son of some other sister. Failing these, it passes to a grand-nephew. If there is no acceptable adult nephew, a full brother may succeed.

Macdonald's account of the Malemya's succession[1] is, I believe, incorrect. The old Malemya (Nalutumbo) was succeeded according to custom by his nephew, Kasabola who, as Malemya, was called Ndalama. Kumtaja was not a younger brother of Nalutumbo or Kasabola, but a cousin of the latter. Ndalama was succeeded by a nephew, not the eldest but the second son of a sister, the eldest having already succeeded to the chieftainship of Kumtaja was therefore ineligible. The present Malemya will be succeeded by a grand-nephew, the son of a daughter of his eldest sister, his sister having no sons. [114]

A successor inherited all the wives and slaves of the deceased chief and all his goods and chattels, guns, ivory and gardens. Any small possessions might be divided among the deceased's children and in the case of guns, those who had always used them often laid claims not to be separated from their weapons; these claims were often allowed by the new chief. 643 428

In the same way, any ordinary man's successor is his nephew, the son of a sister, who inherits all goods and chattels and slave wives, but not free-born wives, nor gardens, which go to the free wives. Stock is generally divided among the children.

Before 1891, when a British Protectorate was formally declared over Nyasaland, each chief ruled supreme. He was consulted as to the dates for *Unyago;* he directed the harvesting, etc.; he proclaimed war and generally was paramount among his people. It will be seen, therefore, that he was a busy man, but he received no direct remuneration. His wealth consisted of slaves and ivory. Slaves he obtained in warfare and as blood money, 643 [556]

[1] Op. cit., vol. I, p. 190.

4: Stannus D-5 (ca. 1909)1910 FT7 Yao FT7
Maravi FR4
Ngoni FR5
Bemba FR5

M 301 Necklaces, most commonly for children, are made of a number of little square pieces of hippo ivory strung together, ornamented with geometrical designs.

M 789 Medicine is often carried in a little packet suspended round the neck, as also charms of various kinds. The medicine may be some powdered charred roots or little twigs, leaves, etc., of some tree; these are sometimes now wrapped up in a Y [789] piece of paper on which is written some extract from the Koran (among Mohammedan Yao); this is then sewn in a little piece of calico and adorned with beads and suspended round the neck with a string.

Charms take various forms. Small pieces of wood or, to guard against attack M 301 by lion, teeth are worn. Armlets of the same kind are worn against sickness, and others are worn by Angoni, made of beads to which knives are attached. Bracelets of ivory, plaited grass and elephant tail hairs are also worn.

N 301 Metal and wirework bracelets are commonly worn by Angoni, also twisted wire finger rings and rings of lead and ivory. Heavy brass ankle rings and spiral brass leg and arm rings 6 inches and 8 inches wide are worn by some of the women (Atonga).

B 301 Bracelets cut from the nail of the elephant's foot are worn by Awemba hunters, and little finger rings cut from the scale of the ant-eater are worn as medicine against fever by headmen.

Belts made of wound copper wire are worn round the waists by Wankonde.

M 302 The use of pigments applied to the body is very limited. I have seen stripes of these, white and red, on the faces of young women, boys and dancers, generally M [439] after some ceremony. The significance I do not know. Pigments are now obtained from Indian traders, and I do not know how old the custom is. There is no beautification of face, body, nails, and eyes by pigments. The only application made to the skin is castor and ground-nut oils to keep it soft—no scents are used.

CLOTHING.

M Y N 291 Among tribes of Nyasaland the amount of clothing worn varies very considerably from nothing to European garments.

Of the large majority, however, including Maffanja people, Yao and Angoni, one may speak generally.

[855] The young children commonly run about naked, or have a strip of cloth covering the pudenda, supported by a string round the waist.

M Y N [556] Among the adult population the amount of clothing depends largely on the affluence of the individual, and those who cannot afford much have little clothing. A man wears a strip of calico supported in front and behind by a string round the waist, a woman a piece of calico 18 inches wide reaching from the middle of the thighs to the umbilicus.

Of the more prosperous, the men wear calico from a little below the knee to the waist, carefully wrapped round the body, and kept in position by some kind of belt; sometimes it is folded across the upper part of the chest or sometimes crossed over in front and two ends tied behind the neck.

2: Mitchell E-5 (1946-1949) 1956 FT7 Yao FT7

culties are settled by the marriage sureties [1] who only report to him after the affair is settled. In disputes of unusual gravity, the headman may call in unrelated persons [2] to arbitrate, but he himself must be present. 622 692

His own behaviour is expected to be exemplary. Any deviation from the norm is likely to be strictly censured, not only by his own villagers, but also by other village headmen, who may say, 'Important men do not behave in this way.' A man who had an argument with his sister's son was told this. He had taken the dispute to a neighbouring headman who decided against the village headman and rebuked him for behaving in a way not consonant with his position. Village headmen should be above squabbling with their villagers. A village headman who was also a leech had virtually raped a woman whom he was treating. He tried to maintain this was part of the treatment. Her matrilineal relatives reported the matter to the headman of her village and he brought the errant headman in front of the chief who said, 'You are wrong to do this when you are an important man. You are a big man and you act as a commoner does. You ought to be able to show the commoners how to behave.' He was made to pay a compensation of £2 10*s.* and fined 10*s.* Had he been a commoner he would have been made to pay a compensation of only 30*s.* 622 577 558 684

The ultimate sanction to which all headmen are subject, is that their people will leave them if they behave badly. This was the fate of Cikumba. 622 558 837

In 1944 Cikumba had a village of about 30 huts. The son of the first Cikumba, Meya, had two wives who were living virilocally in Cikumba's village. Meya had enlisted in the army. While he was away, Cikumba, the village headman who was Meya's father's sister's son (though he called him 'father' because of positional succession), started taking Meya's two wives to beer drinks. Meya's sister one day asked Cikumba about his behaviour, but he only said that Meya could not do anything as he was far away. Things had gone too far, however, when one morning he was seen coming out of the 166

[1] The representative of a spouse in all affairs arising from conjugal relationships. They are usually senior matrilineal relatives. See Chap. VI, pp. 176–7. Their rôle is discussed fully in *Marriage among the Machinga Yao of Southern Nyasaland.*

[2] *Mundu juampambali*, i.e. a person from outside.

2: Mitchell E-5 (1946-1949) 1956 FT7 Yao FT7

622 hut of one of Meya's wives. Meya's sister wrote a letter to tell him
558 of this and he replied that he could do nothing until he returned.
837 In 1946, Meya returned to be demobilized. The third night after his
166 return he questioned his wives about their fidelity during his absence. They at first held out against him but before long he intimidated them into admitting that they had slept with the village headman. Meya now went to complain to Mapata, who was Cikumba's perpetual mother's brother, and he said that he would come to the village the next day.

When Mapata came he confronted Cikumba with the accusation. Cikumba denied it until Mapata called the women. When they confessed Cikumba was forced to admit his guilt. Mapata now decided to call in an arbitrator, Isa, an important but unrelated headman who lived close at hand. Isa said he would come the following day when the matter could be thrashed out. When Isa and Mapata came they asked the women about the affair in public. They admitted the charge and Cikumba did not deny it. Isa then remonstrated with him for being a bad man and said that he was ashamed to hear about it. Cikumba had to pay £6 10s. to the injured man, Meya, who, however, refused to take it. He argued that Cikumba ought to have behaved as a father to him. But Cikumba had not. He, Meya, could not remain living in the village because his wives would be as Cikumba's wives. Isa said that he could not object because Cikumba had caused the trouble and had broken the village himself. How could he complain? Meya took two-thirds of the huts in the village away with him.

The Headman as a Representative of a Corporate Group

622 The headman is not only responsible for keeping the peace
689 between the members of his village, but he is also supposed to control his members in their relationships with other villages. If members take corporate action against other villages, even if they do so without the consent of the headman, the chief will consider the village headman responsible. This was brought out clearly in the relationships between Cikoja, Mapata and Masimbo in Chiwalo's section.

622 Cikoja and Mapata are two of the more important headmen in
689 Chiwalo's section. Masimbo is a minor village headman who lives
423 in Mapata's village area. The quarrel arose over the question of
226 fishing rights in a small pool lying between the two main villages. This pool was excavated by Cikoja and his villagers in 19[illegible]ng

3: Stannus D-5 (ca. 1912) 1922 FT7 Yao FT7

585 drum of her married life begins. The man and woman live together peaceably enough as a rule, each attending to his own sphere of work. The man builds the house, the woman
462 made the floors; she sweeps and cooks, she is the hewer of wood and drawer of water. The man hunts, fishes, makes mats, baskets, the grain store, game traps, and bark-cloth; he looks after the tobacco, and makes the snuff, while his wife brews the beer. He it is who fashions the gourd vessels and carves the spoons, while the woman is the potter (Pl. III, 4) and pipe-maker. Together they hoe and together they harvest, but to the woman falls the monotonous drudgery of pounding and sifting the corn for flour.

842 The Yao have a custom like that of the Anyanja. A sister brings to the house of the newly wedded pair a log of green wood from a *mbaqa* tree which is very hard; the log
[522] may be two feet in diameter and four feet long. Should the bride not become pregnant before it is burned away, the husband is laughed at and they may both be teased by having
[558] many logs brought to the house. A man who has no children is much despised and there is a saying, "He must have eaten some ground-nuts," punning on the word for a thick-skinned variety of ground-nut, *chimbuwila*, a word which also means sterility. An impotent
[837] man may, with the consent of his wife, introduce some male friend into the house, any children born in consequence being claimed as the husband's. He usually chooses some friend from a distance to obviate any attachment springing up between him and the wife. Two married couples may, all consenting, exchange consorts for the night, but they never live together like this for long periods.

582 There is one well-defined marriage taboo; a man may not marry a woman of his own clan. In the old days, he was also restricted to his own tribe, except in the case of slave
[611] wives and wives by capture. Since the clan is inherited from the mother,[1] a man may not marry the daughters of his maternal aunts, but he may marry his other female cousins.
[587] He may not marry two sisters nor a deceased wife's sister; neither do two brothers marry two sisters.

595 The number of wives is limited only by the husband's ability to provide for them. In addition to free wives, a man might formerly have a number of slave wives. The head wife is called *kusyeto*, the other wives, *mangumbo*. The word given by Macdonald, *akusyeto*,[2] meaning the junior wives, is a Chinyanja word and, I think, wrongly applied.

582 It has been said that a man always marries into the village of his wife. For this reason,
[842] female children are always prized as it means an increase in the number of able-bodied men added to the village. In rare cases, the wife might be taken to the husband's village,
[583] as is the Anyanja practice.[3] This, of course, is true in the case of chiefs and headmen. Here, we may also note that no payment is made for the wife and no dowry is received with her.

584 To revert to betrothal, occasionally the sponsors will not agree to the marriage and a
843 runaway match takes place, but in the end, the marriage is usually regularized by the sponsors coming to an agreement. If, however, the woman has in the meantime become

[1] Vide infra, p. 263. [2] Op. cit., p. 134. [3] Stannus, op. cit., p. 309.

539

20. *Wanikile galanaya nkonsi!*
He was "let in" badly over the fish-sticks!

A man had put a lot of fish on spits to roast round the fire. While he went to get some more firewood, a thief came and took all the fish. A stranger then approached and was examining one of the sticks, saying, "There must have been a very nice fat fish on this stick," when the owner returned and immediately accused the innocent stranger of stealing his fish. A native coming across a corpse will run away, using the above expression; for if he reports the matter, he may be the first to be accused.

21. *Sungula wa udechele (mwanache) wa uwile!*
The impotent man had born to him a child in a joke!

[842 558]

A native man who is impotent is very much looked down on and he is the laughing stock of the village. He is constantly made fun of by the women. The story goes that such a man when being chaffed, said, "All right, let me have the prettiest girl in the village," and they said, "All right, old *sungula*, you can do her no harm." But it came to pass that she became pregnant and the women were disgraced. The meaning of the expression is: what is done as a joke may become a reality.

22. *Mwa winji ng'ombe nya nyama unondi!*
Days many, hairs of an animal few!

There are more days than there are hairs in an animal's coat! If A has done a good turn to B, and B behaves badly to A, A will remonstrate, using the above expression, meaning, "You may want my help again some day, but I shall then refuse and you will suffer."

23. *Chilombo changalinga mkono!*
The (country) earth cannot (be) measured in cubits!

Meaning, "You never know when you may want return for your good deeds.

24. *Kusowela kusilanya, kunuka kulijimiga!* or *kupunga pa moto!*
To be generous (is) to save up, to be stingy (is) to deny oneself! or to throw in the fire!

Kindness returns to the doer.

25. *Uwili ukato, ujika wangalikunda kunyuma!*
Two-ness (is) good, oneness he cannot rub the back!

Ku-kunda = to rub the back of another person while bathing, a thing a native appreciates very much. An expression often used with the meaning, "There is safety in numbers," (*winji ikoto!*)

26. *Kulanga ukunilikuwilile!*
Being in a state of poverty, one must not hang (oneself)!

Ku-langa = to be poor, to be in trouble. Do not give up hope.

27. *Kunichilanga kujangalile kwinunga!*
Having become rich one must jump for joy in the dark corner of the house.

2: Mitchell E-5 (1946-1949) 1956 FT7 Yao FT7

him will be other people, but for us the bush does not eat a person.'[1] Mbulaje was left with a few personal adherents. My informant assured me that 'He is a most unhappy man to-day because he is forever accused of being the sorcerer who is causing the deaths of his relatives. People are saying that Mbulaje had broken the village because he wanted to be a chief when the people did not want him. The one the people wanted was killed. Nowadays, no one visits him because of his sorcery and the people are frightened of him especially at beer drinks.' 613 622 562

Immaturity disqualifies many prospective village headmen. A headman must be a man of experience and wisdom to take charge of a village. Unfortunately I cannot present quantitative data on 622 613 561

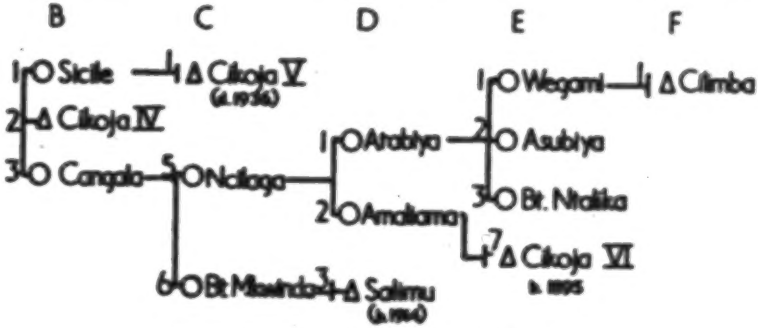

Reference Genealogy. Cikoja Village.

the ages when village headmen succeeded to their title, but my impressions are that unless a man is older than about 30 years he will not be considered for the name. Difficulty arises when there is a conflict between the principles of seniority and age. The older women do not always bear sons before their younger sisters, so that sometimes a man from a junior lineage section (*lisŏelelyanandi*) may be older than a man from the senior. If the younger, but senior, is, say, over 35 it is likely that, other things being equal, he will take the name, but if not the man from the junior house stands the better chance. This is what has happened in Cikoja village. The position is as follows. When Cikoja IV (B2) died, quite regularly the elder sister's (B1) first-born son (C1) succeeded. But many years elapsed between the birth of

[1] *Litinji liyangalya mundu.* In other words, if we go to live in the bush somewhere Mbulaje will not bewitch us. Yao sorcerers are supposed to eat their victims. See p. 117, fn. 1.

622 the children of Ncilaga (C5) and Bt. Mkwinda (C6). There
613 was a big difference in the ages of these two women. Ncilaga
561 died nearly 30 years ago but Bt. Mkwinda died in 1948. When Cikoja V (C1) died in 1936, Salimu II (D3), who was born in about 1914, was very much younger than the present Cikoja VI (E7), who was born about 1895. Ncilaga (C5) had no sons, nor had Atabiya (D1), her eldest daughter, so the succession passed to the only son of Amaliama (D2) who was the senior male in that generation. Salimu II, genealogically senior to the present Cikoja, is to be the next headman. He has married a 'cross-cousin' (his mother's mother's brother's daughter's daughter's daughter) and lives in the village. He has already taken over the affairs in one section of the village. The other section has moved out and built about half a mile away with the present Cikoja VI. Note that the junior house—i.e. the descendants of Citeleka (A2)—are completely out of the succession. Wegami's (E1) eldest son, Cilimba (F1), is living virilocally with Cikoja VI in his section of the village and is already opposed to the prospective village headman Salimu. He is likely to be the village headman after Salimu dies and may even push his claim when the present Cikoja VI dies, because Salimu has been accused of sorcery on several occasions.

622 The conflict between sister's sons and mother's brothers at
578 successions has all but fallen away. The people oppose with
604 some vigour the idea that a younger brother should succeed. Frequently the chief or headman would rather his younger brother succeed, and sometimes indicates him as his successor. Kawinga, for example, has given his pre-succession name of Mlomba to his younger brother and many say this is tantamount to announcing Mlomba as the next Kawinga. This is violently repudiated by most people I have spoken to and they indicate a sister's son as the likely successor. Jalasi too, before he died in 1941, indicated Mbawa, his mother's younger sister's son as the successor, but when it came to the point a sister's son succeeded. The weight of custom is in favour of the sister's sons and usually the succession is fought out among uterine or collateral brothers in the first descending generation.

643 A matrilineal relative is always chosen to be chief in preference
662 to any other, but sometimes there is no heir. Other things being equal an unsuitable matrilineal relative will be chosen, or a

2: Mitchell E-5 (1946-1949) 1956 FT7 Yao FT7

against Cikoja himself. It is important that not once is a member of the junior major segment, that is a descendant of Citileka (A2), involved in the dispute. Only the descendants of Atabiya (D1) and Amaliama (D2) are involved, with the exception of Salimu who appears as the representative of the villagers on the old village site.

The Opposition of the Generations

Segmentation arises as more and more sorority-groups, the daughters of women, reach adulthood, and as the sons of the same women become old enough to undertake responsibilities for the care of the women. There is, in this situation, a fundamental opposition of generations. A woman is bound to her own sisters and at the same time she is bound to her daughters. These bonds come into conflict when her daughters want to express their unity against their mother's sister's daughters. The mother must decide whether she will go with her daughters to their new village site, or whether she will stay with her sisters and possibly with her own brother. I found consistently that a mother seldom stayed in a village when her daughters were moving out of it. The bond with her children is stronger than that with her sisters. Yet the conflict is clearly present. It finds expression in the kinship terminology. A daughter is usually identified with her mother's mother. A woman's daughter's daughter inherits her name, her position and her property in much the same way as a man succeeds his mother's brother.[1] When this has taken place the terms of address of her parental generation are now reversed. In other words her mother's brother instead of calling her, 'sister's child' (*cipwa*), calls her 'mother' (*amao*). Sometimes the qualificative *wamauja* ('who has returned') is used to signify the difference. Her mother's mother's husband even before the succession has taken place calls her 'my wife', and I have recorded one or two marriages between a man and his wife's daughter's daughter. A man's daughter's daughter must also perform some of the funeral rites for her grandfather after his wife has died.[2]

We have among the Yao, therefore, the familiar principle of

[1] See Chap. V, p. 121.

[2] She cooks the ritual meal which he eats at the end of mourning to protect himself against *ndaka*. Here she ritually fills her mother's mother's place.

2: Mitchell E-5 (1946-1949) 1956 FT7 Yao FT7

593 the identification of alternate generations; and this is particularly
578 significant when we realize that the tension between the filial
561 and parental generations is most likely to find expression in the situation where a group of young adult women wish to leave a village, and their mother, if she is still alive, must make up her mind whether to stay or to follow them.

562 The existence of rules of succession for men, different from
613 those for women, presents an interesting analytical problem which
561 I have not yet fully explored. Clearly men must succeed to positions in the first ascending generation, for they are the active leaders in Yao society and those who are to succeed must be sufficiently mature to take over the responsibilities of leadership. Women, on the other hand, are usually not leaders so that succession to positions in the second ascending generation involves no difficulties. A young woman may take her mother's mother's name without involving any responsibilities of leadership. Yet the interaction of the two systems of succession presumably has some reaction on the social structure. A man's sister's daughter who succeeds to her mother's mother's position becomes the man's mother and the man's mother's brother's sister. The man's own sister becomes his mother's brother's mother.[1] The effect of this presumably is to achieve some balance of power between a man and his mother's brother. By the rule of succession for women, a man's sister to whom he is tied by the closest possible ties of kinship, and on whom he is dependent for political success, becomes his mother's brother's mother, so forming a common link between two potentially opposed persons. By the same reasoning a man's sister's daughter who is part of his sorority-group and who is likely to desert her mother's mother's brother to go with her mother's brother if there is a conflict, by succession becomes the sister of her mother's brother's mother's brother, so forming a unifying influence within the lineage. This problem emerged after my fieldwork was completed so that I have no evidence to support these suggestions.

613 Among the men, because of the struggle for political power,
561 the opposition of alternate generations is much stronger than
582 among women. This emerges most clearly in the institution of marriage sureties.

The duties of the marriage sureties towards their wards are

[1] I am grateful to Prof. Gluckman who pointed this out to me.

2: Mitchell E-5 (1946-1949) 1956 FT7 Yao FT7

part of the normal duties of a matrilineage leader to his kinsmen.[1] 613
But ideally each marriage is supposed to have two marriage
sureties. The first, or senior, surety is called *mkokuogona*, which 561
was described to me as 'the log that lies at the doorway'. The 582
picture here is of a wise old man who cannot move around too easily, but who sits at the doorway of his hut ready to give advice and information to his younger kinsmen. In contrast to this is the junior surety. He is called *mkupamame* or the 'beater down of dew'. He is pictured as a young man, who is vigorous about his daily tasks and who is waiting before the dew has evaporated in the morning, at the door of couples who have difficulties. He is essentially the 'one who walks about'.

The senior marriage surety is ideally supposed to be a mother's 613
brother, while the junior marriage surety is supposed to be a 561
brother. In fact, while the junior marriage surety is almost 582
always a brother, though not necessarily an elder brother, the 604
senior, for reasons which will emerge later, is frequently not a mother's brother. However, in the Yao mind the two are fixed in the relationship to each other as mother's brother and sister's son. The fundamental conflict of their positions is expressed by the opposition of the concepts of the 'recumbent log' and the 'active man'. This view is consistent with the segmentation and internal differentiation that must go on within a lineage. As the segments of the matrilineage become progressively independent of each other, the senior relatives, who formerly held them together, become less and less active in their affairs. In Yao idiom they become 'recumbent logs'.

The relationship between mother's brother and sister's son 604
therefore is fundamentally ambivalent. By the values surrounding the concepts of descent and relationship, a sister's son and 627
mother's brother are close kin and bound together in their attachment to a common ancestry and to a common set of living women who are in their joint care. At the same time the mother's brother, belonging as he does to the parental generation, must be respected by his sister's sons. Recalcitrant sister's sons may be made to toe the line by a number of different sanctions. A mother's brother, for example, may take his case to an arbitrator and bring the force of public opinion to bear upon his

[1] I have described the rôles of the marriage sureties more fully in *Marriage among the Machinga Yao*.

2: Mitchell E-5 (1946-1949) 1956 FT7 Yao FT7

621 making the oblation, pours the beer or sprinkles the flour at the
613 root (*lipata*) of a shrine-tree. As would be consistent with this
769 way of looking at the lineage, genealogically-distant ancestors are said to be 'below' (*pasi*), so that if a Yao wishes to say that a certain person was a matrilineal ancestor many generations back, he would say that he was 'very much below'.

The Concept of 'The Mother'

613 The matrilineal descendants of the founder look upon them-
562 selves as having been fed from the same breast and may express this by saying 'we are of one breast'.[1] Deep sentiment is
843 attached to the idea of the mother among the Yao. There is, for example, a sharp distinction drawn between those women who have had children and those who have not. When a woman becomes pregnant for the first time, she is given instruction in child welfare when she undergoes a special ceremony (*litiwo*). This is a ceremony which is publicly announced and attended by most of her matrilineal and other kinswomen and acquaintances. No woman may attend this ceremony if she has not herself had a baby. Thus her change in status in the community is clearly shown by the public recognition of her condition, and the fact that she is initiated into secrets which are shared by other mothers only. Her position in the lineage is much enhanced when she becomes a mother. It is the most important step towards becoming a village founder herself.

562 The concept of 'the mother', in general, also appears in the boys' initiation ceremonies. Certain phases of ceremonies may
601 be conducted only with the help of the women. They have to
881 clap the rhythm to which the 'tailmen'[2] do their dances. Here all women are classified as 'mothers' and without their co-operation the ceremonies could not be conducted. During the same ceremonies three women appear with baskets of food on their heads. The tailmen remove the baskets and sacralize the

[1] *Tuli pañele pamo.* The word *mlango*, a doorway, is also commonly used. The idea in essence is exactly the same. It is the concept of the children who come to settle around a woman's hut door. It is used as *ñundu pamlango pao*, the people of his lineage section.

[2] The *m'mchira*. These are the functionaries in the initiation ceremonies. They carry medicated zebra tails during these ceremonies, and this gives them their names. See especially Stannus, 'The Wayao of Nyasaland', 229 ff.

2: Mitchell E-5 (1946-1949) 1956 FT7 Yao FT7

contents. Here once again the women, though they may have no boys in the initiation ceremony, are called 'the mothers'. The ritual co-operation of the mothers in the initiation ceremonies is paralleled by that of mothers and sons in political affairs: here sons are in charge of the villages, while their mothers and sisters form the nucleus of the localized kinship group, which in turn is the core of the village. 562 601 881

The ritual importance of the mother is nowhere more clearly seen than in the curse. The Yao believe that a mother may curse her child if he or she is disobedient or otherwise beyond control. Not many mothers do curse their children; the threat to curse seems to be more often used. Informants have told me of some mothers who have cursed their children, and the procedure and the wording of the curse have always been very similar. It is usually not applied to young children who could be punished by other means, but to adults and particularly adolescents. Usually the mother lifts her breast and points the nipple upwards saying, 'If you have never sucked from this breast nothing dreadful will happen to you.' The consequences of this are greatly feared. Where I have been told of curses, each time the child has either died suddenly shortly after the curse, or at least it has gone mad. The curse is vaguely supposed to operate through the ancestor spirits, but I could get no clear statement on how this happens.[1] Whatever the cause, however, the symbolic action of lifting the breast and the dire effects which are supposed to follow from this, indicate the importance of the mother in the lineage. 562 861 789 [169]

The Yao attach this sentiment, in general, not only to the mother, but also to all senior matrilineal female relatives. In general speech all female members of the matrilineage in ascending generations are 'mothers', and all members in the descending generations are 'children'. This fundamental relation of mother and child extends throughout the lineage. The Yao term *acinangolo*, used for the senior female members of the matrilineage, embodies this idea of 'the mothers'. More specifically, as far as men are concerned, the matrilineage is classified into 562 601

[1] Further evidence that the ancestor spirits are involved in the curse may be that madness is called *masoko*—spirits—and that it may be said of a madman that the spirits are beating him (*gakumputa masoko*). A curse may be revoked by blowing water out of the mouth, an act which is also vaguely connected with the ancestor spirits.

2: Mitchell E-5 (1946-1949) 1956 FT7 Yao FT7

562 601 'sisters' and 'mothers' because alternate generations are merged in kinship terminology and in behaviour. A man's sister's daughter, for example, is called 'mother', and her daughter (his granddaughter) in turn becomes 'sister'. A woman calls her male matrilineal descendants 'children' (*mwanangu*), or 'grandchildren' (*yisikulu*); her matrilineal male progenitors 'mother's brother' (*akwelume*), or 'brother' (*alumbwangu*).[1] By extension, therefore, another way of expressing common matrilineal descent is to say that two people are the children of one person, *ŵanakajumo*, even though that person may be their great-grandmother. A term which is almost synonymous with this is *mucitumbu cimo*, 'in one womb', used as 'we were conceived in one womb', though once again the reference may be to a common grandmother. But the inclusiveness of these terms varies in different contexts. Any may refer to the matrilineage of maximal span within the village, or to a section of the matrilineage seen as a segmented organization of parts. It is only by reference to the particular ancestress that the range of the term may be determined.

The Unity of the Matrilineage

613 A person identifies himself most closely with the members of his matrilineage from whom he expects most help and whom he, in turn, is expected to help. If he is called upon to pay a heavy fine it will be the members of his own matrilineage who will club together to find sufficient money. They, more than others, [753] support him in his quarrels. They come to his aid when he is ill or injured, by consulting the diviner and trying to find the sorcerer who is causing his illness, and by finding medicines which will bring him back to good health. They send him money if he has left the country and needs it to return. The goods he brings home from the labour centres will be shared mostly [764] among his matrilineal relatives. They will find the food to be used at his funeral and also see that his burial is properly carried [438] out. He owes these duties in turn to them. His property will stay almost entirely within the matrilineage after his death.

613 753 Relationship, unless qualified, is looked upon as being entirely matrilineal. This is well illustrated by the beliefs about the

[1] She more commonly addresses them as *acimweni*. See p. 147.

2: Mitchell E-5 (1946-1949) 1956 FT7 Yao FT7

Table XXV sets out the disposition of the adult survivors of this matrilineage. 613 621

TABLE XXV

RELATIONSHIP OF ADULT SURVIVORS: ALI KASUNKA VILLAGE

Relationship to Founder	In Village	Married out	Labour Migrants	Total
D	—	—	—	—
S	—	—	—	—
DD	3	—	1	4
DS	1	—	—	1
DDD	4	1	1	6
DDS	1	4	2	7
Females	7	1	2	10
Males	2	4	2	8

In this hamlet Ali Kasunka is both village headman and the senior male member of the matrilineage. He brought the village into Chiwalo's area and he had the responsibility for the welfare of its members. He has to arbitrate in the disputes that arise within the village and he must at least appear at arbitrations where the members of his village have come into conflict with outsiders. 613 621 622

THE CONFLICT OF MALE AUTHORITY AND UXORILOCALITY

Although descent is matrilineal, authority still rests with the men. The senior man by generation and age is the leader of the matrilineage. It is true that there are a number of small hamlets under women. Biti Nkula village is one, Biti Cimeta is another. But even for these villages there is usually a man who can be called in to handle the affairs of the village. He may be a classificatory brother of the village headwoman, or he may be her own son if he is old enough. For example, in Biti Nkula's village, it is her own son Adam who goes to the divinations and finds the necessary medicine when people fall ill. He also attends the court cases involving a member of the village. Adam is married to a woman in Ndiwagani's village about three-quarters of a mile away from his home and he is therefore easily 562 591 613

2: Mitchell E-5 (1946-1949) 1956 FT7 Yao FT7

562 available when needed. When he became a labour migrant in
591 1945, his younger uterine brother Lipepeje took over the responsi-
613 bilities. He is married in Ali Kasunka's village, which is about a mile from Biti Nkula's. In Biti Cimeta's village the minor disputes are settled by the headwoman herself. Her younger sister's son is married in a village ten miles away, and he would take over the duties if he could. He is married to his sister's husband's sister, and his sister's husband has threatened if he should try to take his wife home he will in turn take his wife to his home. Rather than stand the loss of a member from his matrilineal village he prefers to remain married uxorilocally. When more serious disputes occur he comes to Biti Cimeta's to settle them.

The principle of uxorilocal marriage is thus in conflict with the principle of male leadership of the lineage. If a man is living too far away he cannot attend to his numerous duties. The conflict can be solved in one of three ways. The first is that the man may marry in a village which is close at hand, and most marriages do take place between people who live near each other.[1] Second, he may marry a cross-cousin who is living in the village, albeit in another section of it. He need not then move out. Third, he may bring his wife into his village. The last two alternatives are from his point of view the best. He is then living with his matrilineal relatives, and among the group in which he has clearly defined rights and unequivocal status. But his wife's brothers will resist his attempts to take his wife from her village, especially if she is still capable of bearing children. He has to persuade her brothers to let her go with him and if they refuse, or if the woman herself refuses to go, he is helpless. Is he wishes to live virilocally now his only course is to divorce the woman and marry a woman who will live virilocally with him. If he does bring his wife to his village she is kept there by only loose ties of marriage, and on the slightest pretext her male relatives will take her back to her village or she herself will run away home.

562 The larger the group of relatives to be looked after, the more
591 urgent is the need for the senior matrilineal male to live with his
613 lineage. All the villages headed by females are small. Table

[1] 75 per cent of marriages are contracted by people who live within 10 miles
621 of each other. See *Marriage among the Machinga Yao.*

2: Mitchell E-5 (1946-1949) 1956 FT7 Yao FT7

XXVI sets out the position of a casual sample of 36 villages in Chiwalo and Nyambi areas. Among the 23 villages which had

562
591
613
621

TABLE XXVI

SIZE OF VILLAGES UNDER HEADWOMEN AND HEADMEN

Type of Village	Under 10 Huts	Over 10 Huts	Total
No matrilineage male resident .	13	2	15
Matrilineage male resident . .	10	11	21
Total	23	13	36

less than 10 huts each, 13 or 56·6 per cent had no male matrilineage members living in them. Among the 13 villages which had more than 10 huts, only two or 15·4 per cent had no matrilineage male members living in them.[1] The largest village in which there was no matrilineal male had only 11 huts. When the size of the village increases, the senior male matrilineage member tends to move in to live with his wards.

THE SORORITY-GROUP (*mbumba*)

But as the village grows and the duties of a senior matrilineage male become more onerous, a form of organization appears within the lineage which lessens his burden. This takes the form of the differentiation of sibling groups, and is part of the normal process of segmentation which is inherent in any lineage system. Consistent with the Yao idea that men should take care of the affairs of the lineage, sisters look to their eldest brother when they are in trouble. This group of sisters in the care of their brother is called *mbumba*. In the plural *acambumba* the word refers to women in general, but in the singular it refers to a particular group of women in the way I have explained. The word is always used in the sense of 'so-and-so's *mbumba*', as *mbumba ja CeMayele*. The central concept here is the brother-sister link and I have accordingly translated the word *mbumba* as sorority-group.

613
593

The man who is in charge of the women, usually their eldest

593

[1] Diff. of per cent = 41·1 ; S.E. of diff. = 17·1 ; C.R. = 2·4 ; p = 0·0164.

The close link of brother and sister is also reflected in the kinship terminology. The common term used by both men and women to address sisters is *cemwali* and it is also applied to all women out of respect. But the term which is used descriptively and sometimes in address, cross-sexually, is *alumbwangu* (my sibling-of-opposite sex). It is self-reciprocal and thereby expresses the special relationship between the man and his sisters. Two sisters address each other in everyday conversation as *cemwali*. When it is necessary to be more specific an elder addresses the younger as *akuluwanga*. These are also descriptive terms. A man addresses his younger brothers as *apwanga* while they address him as *acimweni*. Women also address their elder or younger brothers as *acimweni*. This word is widely used as an honorific title but it is especially used for people who are in authority. The chief, for example, may be referred to as the *mcimweni*, and men frequently call their mother's brothers and other senior matrilineal male relatives by this term. An elder brother has the same duties towards his younger brothers as to his sisters, so that use of the term of address *acimweni* here indicates his position of authority over them.

From the point of view of a warden, his sorority-group is essentially made up of his sisters. We have seen that he is responsible for his younger brothers in exactly the same way as he is for his sisters, though technically they are not his sorority-group. He also has control over his sister's children so that ideally a warden sees his sorority-group as his sisters and their daughters and their daughter's daughters and so on. But a man's sister's daughters will probably have as their warden their own brother who stands in the same relationship to them as their mother's brother stands to their mother. The matrilineage is therefore organized internally in a system of inclusive sorority-groups extending from the eldest surviving member down to the youngest. However, a component sorority-group of a matrilineage does not begin to appear as a corporate group until the man who is to be its leader is old enough to take charge of the affairs of the women under him. Naturally, the age at which this happens is largely a matter of circumstance. Theoretically a man may not take charge until he has been initiated. But Yao boys nowadays are usually initiated at about 8 to 10 years of age. Obviously a child of this age cannot take over the affairs of his adult sisters, so that his mother's brother looks after

2: Mitchell E-5 (1946-1949) 1956 FT7 Yao FT7

613 them until he grows up. It is only when the boy becomes
562 adolescent that he begins to take an active part in these affairs.
593 This may begin in a small way. He may, for example, accompany
604 his mother's brother when he goes to consult a diviner. Or he

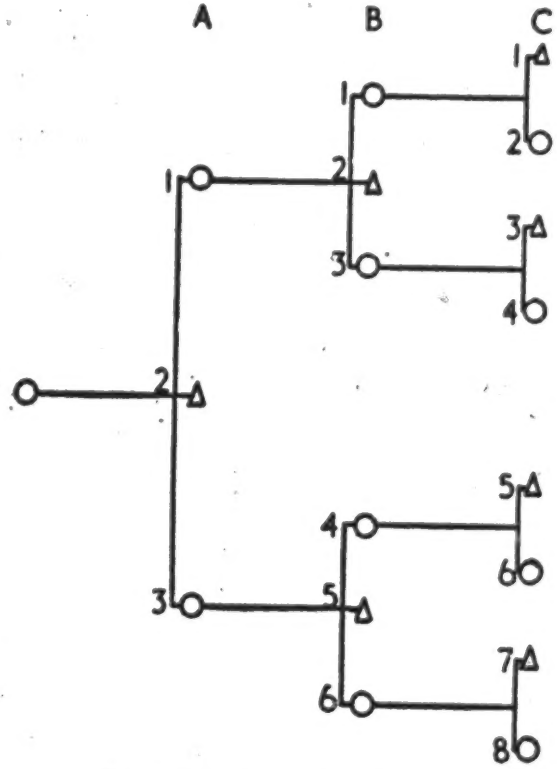

DIAGRAM 3. THE SORORITY-GROUP.

A2 sees his sorority-group as being composed of A1 and A3 and by extension *their* children.

B2 sees his sorority-group as B1 and B3 and by extension *their* children.

B5 sees his sorority-group as B4 and B6 and by extension *their* children.

may be given the charge of the conjugal affairs of one of his newly-married sisters. Gradually he assumes more and more responsibility. His mother's brother on the other hand falls more and more into the background and becomes rather a consultant than an active participant.

2: Mitchell E-5 (1946-1949) 1956 FT7 Yao FT7

It is difficult to over-emphasize the importance of the sorority-group in everyday life. There is hardly a social situation in which the relationships of a man to his dependent female matrilineal kin are not involved. Probably marriage is the most frequent context in which his duties to and responsibilities for his sorority-group emerge. When a man wishes to marry a woman, he must get the consent of her brother. Ideally, it is a woman's brother who gives the consent, and if one asks a Yao how he gets married to any particular woman he will answer immediately, 'You go to ask her brother.' When consent has been obtained the woman's brother seeks out the man's brother and formally meets him, thereby setting the public seal on the relationships between the man and the woman. This gives the husband particular rights over his wife and her activities. After this, the difficulties of any of the marriage partners are the concern of the two sponsoring relatives (*acinamangoswe*) whom I have called 'marriage sureties'. They meet to discuss the illnesses of either of the marriage partners or their children and try to settle the differences that arise in the married life of their wards. They must be consulted before the marriage can end, and in fact they perform the act that ends the marriage, i.e. one pays a nominal sum of say 2*s*. to the other.

According to the Yao, women are quite helpless in their relationships with others, in illness or in any court cases, and must always have a man to look after them. They are seen to be as dependent on him as children are upon their parents. A statement made to me by old Naliwa, a man who has been looking after a sorority-group for years, reflects this attitude of the men towards the women in their care.

These dependent women (*mbumba*) are as annoying as children to look after. They are *miseci* [1] indeed. If a child is ill they go to tell their brother who says, 'Very well, I shall come to see the child.' If he is not very quick to do it they are likely to be backbiting. If he finds the child very ill he goes to tell the marriage sureties of its father, and they go to a diviner to look for medicine for the sick child. Then the sisters say that he is a good man because he gets on with the job when a person is ill.

Soon the child's mother becomes ill. Someone goes to tell her brother who says that he will come to see her. He visits her husband's

[1] Backbiting. See Chap. VI, pp. 137–8.

2: Mitchell E-5 (1946-1949) 1956 FT7 Yao FT7

562 marriage surety and together they consult diviners and find medicine
578 until she recovers. Then he goes back to his village.
593 He has no sooner got back when someone comes along to tell him that the child is ill again. He says, 'I am busy, I have some work to do. Tell someone else to go to the diviner.' The messenger goes back to his sisters and they say to each other: 'He is not a good man. He refuses to go to the diviner for the child.' Another says, 'Yes, it is so. Our brother is not diligent and when he comes here he will get no food from us. He eats our food but he does not work for us. Let us ask someone else to look after us. Our younger brother is a good man indeed.' Then everyone agrees that this should be so. The one that all said was a good man before, they all now say is bad. Then the sisters go along to tell the other brother who says, 'Go and tell my elder brother.' The sisters reply that he is not a good man and say, 'We want you to look after us.' He agrees and goes to the diviner to get medicine.

The next morning a husband goes off to his village without saying goodbye.[1] The wife now goes along to tell her younger brother who says that he can do nothing about it and that she will have to tell her older brother. She returns to her village crying, and tells her sisters that she told her brother about her husband's leaving and that he refused to have anything to do with it. Then one of the sisters says, 'Yes, the older one is a good man, not like that bad young one. If this one were the older one he would have already gone to get the man back.' Others say, 'Yes, that young one is not good at all. He is a sulky one. Is he not a sorcerer? Go to the big one and tell him.'

Then the woman goes to the hut of the older brother and tells him of her difficulties. He tells her to go and fetch her husband and if he refuses to come back, to tell him. This she does and he refuses to return. She reports this to his elder brother. He tells her that his younger brother will return and if he does not they will come to talk matters over. The woman goes back to her village and goes to see her elder brother to tell him what she has done. He says, 'Very well, my sister, if he does not come to-day I shall go there to-morrow. Now go home and give the children some food.' When she gets back to the village she says, 'That brother is a good one indeed. He is diligent. He is going to fetch my husband back, if he does not return to-day.' If the man has not come by the next morning the woman goes to tell her brother. He goes to the husband's

[1] *Kuunduke*—to go off in a huff, to go off without saying goodbye. This is a sure sign that there is something wrong and that some action needs to be taken.

2: Mitchell E-5 (1946-1949) 1956 FT7 Yao FT7

village and seeks out his marriage surety. They call him and tell him that the woman's brother has come to take him back to the village. He says that it is all right and that he will follow that evening. The brother goes back and tells his sister to cook porridge because her husband will be coming that evening, and then he goes home. The husband returns. 562 578 593

The woman now goes to tell her brother that her husband has returned and he says that he will come to visit him in the morning. Next morning her brother comes to the hut and asks her husband why he had left. 'You were cross about something and you did not come to tell me. Now tell me why you left.' The husband now tells him and they talk it over. If they fail to reach an understanding they go to tell the husband's sureties and discuss the case fully. If the woman is wrong her brother reprimands her and if the man is wrong his sureties reprimand him.

To live with a sorority-group needs courage.[1] You must not listen to backbiting. If you listen to the tales of others then you will not be able to live with your sorority-group because your heart has no fierceness. A sorority-group needs a man who has no fear. Then the women listen to what he says. He will say to his sister, 'Sister, hoe your gardens well. Do not have intercourse in the bush because it will finish your children with salt.[2] You must respect your husband and not tell him lies because he will not trust you and will be frightened of you. Listen to what I tell you. Things will be peaceful in your house if you come to tell us what is going on. If you do not tell us then there will be lots of friction.' Then the people say about a man whose sisters are not very happy, 'Who is that man who is not teaching[3] his sorority-group well?' Then the people will mention his name and they will laugh at him. If the sorority-group are living happily together he is a good man and he does not listen to the backbiting. His sorority-group are obeying him well and he lives happily with them.

In this account one cannot but be struck by the ambivalence of the relationship of brothers and sisters. Now they hate each other and now they love each other, depending largely on the fortunes of the moment. But the tie is the strongest in Yao social structure; while the relationships between the sorority-group and any particular brother may vary, the relationship between brothers and sisters in general is unassailable. When 593

[1] *Wakulimbika ntima*; perhaps more literally translated as 'a stout heart'.
[2] A reference to *ndaka*. See Chap. V, p. 112.
[3] In the sense of teaching them the right way to live, as their mentor.

While the succession rule may indicate someone as having the
613 best claim to a headmanship or chieftainship, it does not ensure
622 that he will succeed. Succession to headmanship is not merely
562 a matter of assuming control over the matrilineal relatives of the headman. It is also taking command of the whole village as an entity in a political structure and keeping it together as a functioning whole. The village as a whole, as well as the perpetual senior relatives, has a say in the selection of the new headman, and they select the man who is likely to be the most suitable for the position. Here, as in most affairs, the women have an important say. When they consider his suit the village members discuss in particular the ability of the prospective headman to hold the village together. If he is unsuitable they may cite occasions when he is believed to have used sorcery, or sometimes they merely say that he ' has no mouth '. This means that he is incapable of settling the disputes which arise in the village and therefore is unable to keep peace within it. The attitudes of the villagers to suitors for a name are well brought out in the statements when the Misi name was considered.

There were two uterine nephews, Wadi and Mbulaje, whose claims were about equal though Wadi was the elder. The chief Kawinga sent his representative Kasonga to call for a decision. At a general meeting he asked the villagers whom they wanted. Typically Kasonga's remarks were addressed particularly to the women. There was a division of loyalties. Some said that they wanted Mbulaje because ' he was of good heart, he gave gifts, he laughed and was not bad tempered, and he looked after the people when they were ill '. Kasonga, however, asked the opinion of the women under Mbulaje, and they were apparently dissatisfied with him and supported his opponent. Kasonga therefore announced that the new headman would be Wadi. Mbulaje was dissatisfied with this decision and gathered about him his followers and went off to found a village elsewhere. But the position for Wadi was an uneasy one. He lived in dread of Mbulaje's sorcery. When he was ill just before he died, he accused Mbulaje of putting poison in his beer. After he died Mbulaje brought back the women he had taken away and adopted the attire of the village headman. The people cynically accepted this, saying that he should perhaps take it because if any other should try to be headman he would not enjoy the fruits long before he too was killed. But the women were not satisfied with this arrangement and led by Cilo, the headman's sister's son, migrated. They said, ' We wonder that our chief should have died. The heart of the present chief is not good. Those who will stay with

2: Mitchell E-5 (1946-1949) 1956 FT7 Yao FT7

him will be other people, but for us the bush does not eat a person.'[1] Mbulaje was left with a few personal adherents. My informant assured me that: 'He is a most unhappy man to-day because he is forever accused of being the sorcerer who is causing the deaths of his relatives. People are saying that Mbulaje had broken the village because he wanted to be a chief when the people did not want him. The one the people wanted was killed. Nowadays, no one visits him because of his sorcery and the people are frightened of him especially at beer drinks.' 613 622 562

Immaturity disqualifies many prospective village headmen. A headman must be a man of experience and wisdom to take charge of a village. Unfortunately I cannot present quantitative data on 622 613 561

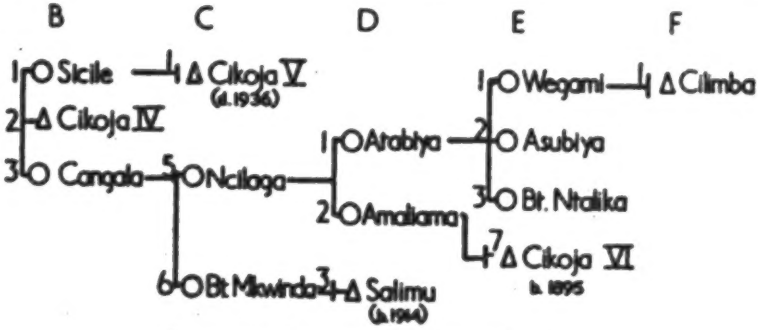

REFERENCE GENEALOGY. CIKOJA VILLAGE.

the ages when village headmen succeeded to their title, but my impressions are that unless a man is older than about 30 years he will not be considered for the name. Difficulty arises when there is a conflict between the principles of seniority and age. The older women do not always bear sons before their younger sisters, so that sometimes a man from a junior lineage section (*liwelelyanandi*) may be older than a man from the senior. If the younger, but senior, is, say, over 35 it is likely that, other things being equal, he will take the name, but if not the man from the junior house stands the better chance. This is what has happened in Cikoja village. The position is as follows. When Cikoja IV (B2) died, quite regularly the elder sister's (B1) first-born son (C1) succeeded. But many years elapsed between the birth of

[1] *Litinji liyangalya mundu.* In other words, if we go to live in the bush somewhere Mbulaje will not bewitch us. Yao sorcerers are supposed to eat their victims. See p. 117, f.n. 1.

622 the children of Ncilaga (C5) and Bt. Mkwinda (C6). There
613 was a big difference in the ages of these two women. Ncilaga
561 died nearly 30 years ago but Bt. Mkwinda died in 1948. When Cikoja V (C1) died in 1936, Salimu II (D3), who was born in about 1914, was very much younger than the present Cikoja VI (E7), who was born about 1895. Ncilaga (C5) had no sons, nor had Atabiya (D1), her eldest daughter, so the succession passed to the only son of Amaliama (D2) who was the senior male in that generation. Salimu II, genealogically senior to the present Cikoja, is to be the next headman. He has married a 'cross-cousin' (his mother's mother's brother's daughter's daughter's daughter) and lives in the village. He has already taken over the affairs in one section of the village. The other section has moved out and built about half a mile away with the present Cikoja VI. Note that the junior house—i.e. the descendants of Citeleka (A2)—are completely out of the succession. Wegami's (E1) eldest son, Cilimba (F1), is living virilocally with Cikoja VI in his section of the village and is already opposed to the prospective village headman Salimu. He is likely to be the village headman after Salimu dies and may even push his claim when the present Cikoja VI dies, because Salimu has been accused of sorcery on several occasions.

622 The conflict between sister's sons and mother's brothers at
578 successions has all but fallen away. The people oppose with
604 some vigour the idea that a younger brother should succeed. Frequently the chief or headman would rather his younger brother succeed, and sometimes indicates him as his successor. Kawinga, for example, has given his pre-succession name of Mlomba to his younger brother and many say this is tantamount to announcing Mlomba as the next Kawinga. This is violently repudiated by most people I have spoken to and they indicate a sister's son as the likely successor. Jalasi too, before he died in 1941, indicated Mbawa, his mother's younger sister's son as the successor, but when it came to the point a sister's son succeeded. The weight of custom is in favour of the sister's sons and usually the succession is fought out among uterine or collateral brothers in the first descending generation.

643 A matrilineal relative is always chosen to be chief in preference
662 to any other, but sometimes there is no heir. Other things being equal an unsuitable matrilineal relative will be chosen, or a

2: Mitchell E-5 (1946-1949) 1956 FT7 Yao FT7

woman will take the position, before the name will be allowed to pass to a non-matrilineal relative. While a matrilineal relative holds it there is always the chance that a suitable matrilineal heir will be born to a woman of the matrilineage, and will be able to take over the name. In Katuli's area the principle of primogeniture is so strong, I was told that rather than let a succession pass to a junior house, a woman is appointed to ' keep the name '. This happened before the succession of the present Katuli. Nkolojele was the present Katuli's mother, and when his mother's brother died Katuli was too young to become the chief. Instead Nkolojele took the name to prevent it from going to a junior lineage and held it from 1920 to 1936. Nkolojele was thus appointed Principal Headman under the 1912 Ordinance. In 1936, she retired in favour of her son who then took the name Katuli and became chief. 643 562

The name is kept within the matrilineage if it is at all possible. The history of the succession of Mpumbe's name is instructive in this context. 622

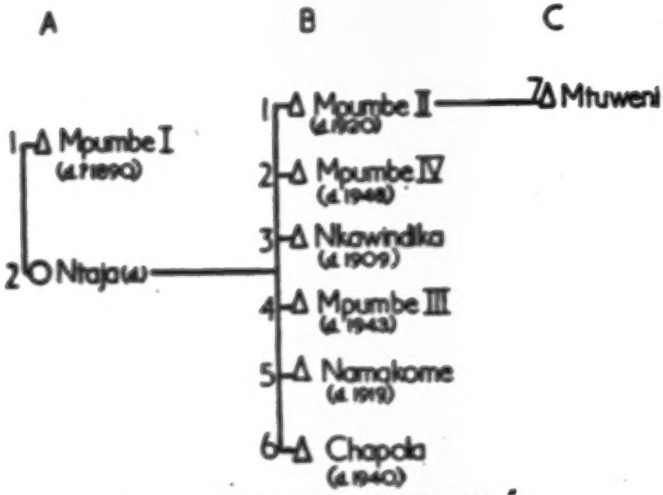

Rufumbwe Genealogy. Mpumbe Village.

Mpumbe, it will be remembered,[1] came from Jalasi's area to Kawinga's after the White attack on Jalasi in Mangoche. The genealogical summary sets out the relevant data.

[1] See p. 59.

2: Mitchell E-5 (1946-1949) 1956 FT7 Yao FT7

the identification of alternate generations; and this is particularly significant when we realize that the tension between the filial and parental generations is most likely to find expression in the situation where a group of young adult women wish to leave a village, and their mother, if she is still alive, must make up her mind whether to stay or to follow them.

The existence of rules of succession for men, different from those for women, presents an interesting analytical problem which I have not yet fully explored. Clearly men must succeed to positions in the first ascending generation, for they are the active leaders in Yao society and those who are to succeed must be sufficiently mature to take over the responsibilities of leadership. Women, on the other hand, are usually not leaders so that succession to positions in the second ascending generation involves no difficulties. A young woman may take her mother's mother's name without involving any responsibilities of leadership. Yet the interaction of the two systems of succession presumably has some reaction on the social structure. A man's sister's daughter who succeeds to her mother's mother's position becomes the man's mother and the man's mother's brother's sister. The man's own sister becomes his mother's brother's mother.[1] The effect of this presumably is to achieve some balance of power between a man and his mother's brother. By the rule of succession for women, a man's sister to whom he is tied by the closest possible ties of kinship, and on whom he is dependent for political success, becomes his mother's brother's mother, so forming a common link between two potentially opposed persons. By the same reasoning a man's sister's daughter who is part of his sorority-group and who is likely to desert her mother's mother's brother to go with her mother's brother if there is a conflict, by succession becomes the sister of her mother's brother's mother's brother, so forming a unifying influence within the lineage. This problem emerged after my fieldwork was completed so that I have no evidence to support these suggestions.

Among the men, because of the struggle for political power, the opposition of alternate generations is much stronger than among women. This emerges most clearly in the institution of marriage sureties.

The duties of the marriage sureties towards their wards are

[1] I am grateful to Prof. Gluckman who pointed this out to me.

2: Mitchell E-5 (1946-1949) 1956 FT7 Yao FT7

him. The woman in the meantime had run to Chiwalo's hut half a mile away. Here she complained to the chief that Mwanace wanted to kill her. Chiwalo refused to listen to her complaint and sent for Ali Kasunka. When he had come and explained the sequence of events, he continued saying that he would like to take the case to court. Chiwalo, who was Ali Kasunka's wife's father's sister's son (hence a classificatory younger brother) and whose henchman Ali Kasunka was, refused to arbitrate in the case but referred it to Kawinga. On the day of the case the woman's husband came back from the Army. The case was tried and eventually the court assessors awarded a damages claim of £3 to be paid by Mwanace to his sister. The husband, at the same time, said that he could not remain married to her because whenever he saw her he would think that she had slept with her brother and in court he gave Ali Kasunka a marriage termination payment. The tension between Ali Kasunka and his 'sister's son' did not end there however. When they got back to the village Ali Kasunka remonstrated with Mwanace saying, 'Are you not ashamed to have married your sister?' Mwanace said that he could not stand that sort of thing and went back to live uxorilocally.

A crucial point in this case history is that the women did not like Mwanace. Almost certainly there would have been a split in the village had the women had more confidence in Mwanace. The tension between Ali Kasunka and Mwanace, although the conflict is inter-generational, started, as it consistently does, from the relationships of a man to the women of his matrilineage. Without the support of the women, younger brothers or sister's sons are impotent against the power of their senior relatives. It is only when they can induce the women to follow them and to leave their rivals that they can found a new village and thereby begin to earn prestige. Therefore, although the men are the active agents in bringing about a physical act of fission, they are in fact only making manifest a situation which is latent within the lineage.

The position of the senior male matrilineal relative is of fundamental importance in questions involving segmentation. His position is seen most clearly in the dominant matrilineage, in which the name of the village is inherited. The Yao practise 'positional succession'. A man not only succeeds to his mother's brother's name but also to the position of the mother's brother in the social structure as a whole.[1] It follows that when the

[1] See Chap. V, p. 121.

4: Stannus D-5 (ca. 1909) 1910 FT7 Yao FT7 Marovi FR4

case *mwavi* might be administered; if adjudged guilty the accused would be burned on a pile of wood. M 695

Evidence is given without taking any oath; a false witness is not punished. M 696

Justice is occasionally summary. At Mponda's, after conviction of adultery with one of the chief's wives, a man's throat was cut on the spot. Drowning was the usual punishment with Mponda.

Punishments for all offences practically meant payment.

CUSTOMS, SALUTATIONS, ETC.

The correct salutation among Machinga Yao and Mdanja on meeting is clapping the hands, the hands in front of and at right angles to the body parallel to each other, thumbs against the fingers. The clapping should be continued for ten minutes after having passed; after passing a chief it should be continued for half-an-hour. M Y 576

Another form consists in slowly beating the breast with the right hand, the head slightly inclined forward. The lower in station makes salutation first to the higher, a man to a chief, a woman to a man; exception is made in the case of an old woman, who is saluted by the man. Scattered all over the country a raising of one or both arms is a common form of salutation, but is probably only a corruption of the military salute. M Y [559] [893]

Slapping of the nates or thigh with the right hand is also seen, among old men usually. In imploring mercy from, or on the first occasion of meeting, the chief, a man lies prone on the ground and catching the foot of the chief, puts it on his neck—a sign of absolute submission. Women kneel at the approach of a man. Words and expressions of salutation are few—*Mapo* (=heart) being the only old expression used. Now commonly one hears a word (sounding like *ndwi*) probably a corruption of good morning, and the Swahili greeting *Salaam* with the double hand-shake of Mohammedans. M Y [201] [562] [177]

A man returned to his village after an absence rests awhile, then his wife comes to him and kneeling greets him, *mapo*, her husband returning *mapo*.

Years ago, a man of any importance was received with firing of guns and shouting. A headman is received now with *Ntungulule*, the women wobbling their tongues in their mouths. Ashes are put on the head as a sign of *joy*. M Y [152]

In the morning the husband and wife do not greet each other, but in the village friends "give each other good morning" (=*Mapo*). On waking in the morning, a woman cracks all her joints (=*K'uliw' chala*). She then massages her husband and cracks the joints of his fingers. M Y [592] [596]

One man wishing to see another goes to his house, and squatting outside the door cries "*Ichu!*" three times (=there), at the same time clapping his hands. If no answer be given he goes away, even though he knows the man is within, no answer meaning that the inmate does not wish to be seen. If invited to enter he does so, the man of the house rises and gives him salutation. He makes small M 574 576

2: Mitchell E-5 (1946-1949) 1956 FT7 Yao FT7

economic centre of Southern Nyasaland and much land has been alienated to Whites there. Liwonde area, which has only 30·7 to the square mile, has large parts that are unpopulated because of the lack of surface water on the escarpment of the Rift Valley.

This population is by no means homogeneous, tribally or linguistically, but culturally the tribes are all very similar. The Yao, Nguru and Nyanja, who comprise most of the population, live in villages under village headmen; marry uxorilocally; have similar practices and beliefs in sorcery and disease. Table II

TABLE II

TRIBAL COMPOSITION OF THE CHIEFDOMS: 1945

Chiefdom	Total Population	Percentages of Tribes			
		Yao	Nguru	Nyanja	Ngoni
Jalasi	40,287	81·3	12·4	5·9	0·2
Nyambi	7335	73·2	26·8	0·0	0·0
Kawinga	44,789	48·7	35·7	14·4	1·2
Liwonde	12,176	73·2	19·6	5·2	0·1
Malemia	12,448	73·1	9·6	13·7	1·6

Source: Nyasaland Census, 1945. Abstracted from the detailed returns at the District Commissioner's Offices at Zomba and Fort Johnston.

shows the tribal make-up of the five areas with which I am concerned. Three-quarters of the population in all these areas are Yao. In Kawinga area, in which non-Yao tribes are most numerous, only one-half of the people are Yao, but included in this area are the two Mpotola subordinate chieftains Ngokwe and Chikweo, whose followers are predominantly Nguru (42·7 and 55·7 per cent).[1] If we exclude these two chiefdoms, the proportion of Yao in the rest of Kawinga area is 55·6 per cent. Nyambi and Kawinga areas, lying as they do against the Portuguese East African boundary, have the greater proportion of Nguru. Within Kawinga area the concentration of the Nguru along the boundary is also shown. Chiwalo chiefdom, which lies to the west of Kawinga area, has only 15 per cent Nguru,

[1] It seems have that the Mpotola may have been enumerated as Nguru and Nyanja.

[text continues on p. 16]

2: Mitchell E-5 (1946-1949) 1956 FT7 Yao FT7

K2 slightly more than the extreme southerly chiefdoms, Mposa and
S63 Chamba. As we have seen, half the population of the two most easterly chiefdoms is Nguru.

The Nyanja are concentrated mostly along the Shire River banks and around the Lake Shirwa shores. Most in Kawinga are at the north end of the Lake Shirwa or in Mposa at Lake Shirwa [1] and, according to the census, in Ngokwe in the extreme north-east. It is possible that in Ngokwe some of the Mpotola have been enumerated as Nyanja.

Although my study was of the Yao, I cannot exclude these other ethnic groups from it. The specific percentages must not be considered as exact reflections of the tribal make-up in the area. Though the villages of the three main tribal groups tend to be distinct, and intermarriage is not as great as might be expected, there are increasing numbers of children of mixed tribal parentage. There is some value in the figures, but we must take into consideration the general political situation in these chiefdoms. I enlarge upon this theme later. Generally speaking, however, the Yao have come in as invaders, while most Nguru have come in as immigrants. The Yao have greater prestige both in the eyes of the Whites and in the general structure of the chiefdoms. Many Nguru therefore, who have been in this area for some time, have come to call themselves Yao if they are asked, especially by a White man. This is especially true of the Mpotola people where they are living under Yao chiefs. The Mpotola are technically Nguru but most have lost their own language and speak only Yao. The Administration did not classify the Mpotola as a separate tribe in the Census and it is difficult to decide whether they were included as Yao or Nguru. Most of the Mpotola headmen I have met in Yao chiefdoms have called themselves Yao until they were prevailed upon to qualify their claim. Allowing for some discrepancies in the figures, the table shows nevertheless that numerically the Yao outnumber any other tribe in the area. In general, the other tribes are members of the chiefdoms and take part in most of the social activities which occur within them. I outline later the position of their headmen in the general political structure, but I wish to set out here some general notes on the tribal background of the non-Yao groups.

• S63 The term Nguru is applied to a large group of people who call

[1] 32 per cent of the population in Mposa's area is Nyanja.

2: Mitchell E-5 (1946-1949) 1956 FT7 Yao FT7

themselves Alomwe. These people came from that part of Portuguese East Africa immediately to the east of Nyasaland. They speak a group of dialects mutually intelligible and widely different from either Yao or Nyanja. Culturally and structurally they are similar to the Yao and Nyanja, practising matrilineal descent and uxorilocal marriage, and living in small groups of matrilineal kin. Their religious and mystical beliefs are also the same. Some of the linguistic groups that form this congeries are the Shirima, Kokhola, Metho, Thokwani, Ratha, Kuwa, Nahara, Marenje, Nyamwelo, Mihavani and Nikhukhu. These people have been migrating into Nyasaland over the last fifty years, and now predominate in the Cholo and Chiradzulu districts. 563

The Nyanja were the original inhabitants in these areas, but have been almost completely displaced by the Yao, except in Liwonde along the Shire River and in Kawinga along the Lake Shirwa shores. Linguistically they are more akin to the Yao than to the Lomwe, but their language is still unintelligible to the Yao. Culturally they appear to be similar to the Yao, and they have accepted certain Yao institutions such as the boys' initiation ceremonies (*lupanda*), and have been fitted into the social and political structure.

The Ngoni, of whom there are very few here, are concentrated on the south side of the Chikala Range, in the areas of Chamba and Mposa, who are subordinate chiefs to Kawinga. They are the remnants of various Ngoni armies that raided into Nyasaland during the last two or three decades of the nineteenth century. As far as I could ascertain they have adopted Nyanja ways and language.

Historical Background to the Modern Economic Situation

Nyasaland to-day, as part of the British Empire, is in the general world economic system, and the Africans in the tribal areas participate in this system, though not to the same degree as the White planters in the Shire and Dedza Highlands. If the Yao were ever a people who supported themselves by their agriculture alone, they had adopted a more complex economy long before the Whites came to Nyasaland. Later, when I discuss their historical background, I outline briefly the position 439

2: Mitchell E-5 (1946-1949) 1956 FT7 Yao FT7

643 him about the laws it intends to introduce which affect his people. The Administration transmits new Ordinances and Regulations to the chief and he must then relay them to the village headmen. When it advises the chief of a new law it thereby advises the people of his chiefdom.

The Origin of Villages in Modern Chiefdoms

195 621 We have thus far been looking at the chiefdom as an organization of villages united by their common interests in and association with one chief. But the villages that compose the chiefdom are not all equally closely integrated into the political structure. This is most clearly seen against the background of how the modern chiefdoms came into being.

175 621 563 By the time that the 1912 Ordinance was introduced the social composition of the chiefdoms had undergone some change from what it was before the White conquest. Before the White conquest the Yao chiefs had overcome the indigenous inhabitants of Southern Nyasaland. Some of these had been allowed to remain in the area as subjects. Others were enslaved. There were some Nguru, Nyanja and Mpotola village headmen who had come to seek the protection of the Yao chiefs.

175 621 166 During the conquest, the territory was thrown into confusion, and villages fled in abandon from their own into neighbouring chiefdoms both in Southern Nyasaland and Mozambique. When the Administration allowed the chiefs to return, most of the important village headmen and their followers returned with them. Kawinga, for example, was allowed to return, not to Mount Chikala but to the area immediately to the north of it. He brought back with him most of his important headmen who had fled with him to the country of the Mpotola chief Nkanyela, in Mozambique. Jalasi was allowed to return from Portuguese Territory in 1906,[1] not to his mountain fortress Mangoche, but to a smaller hill Sakalwe some miles to the east. He gathered round him a few of his important headmen.

When hostilities ceased, there was a certain amount of internal readjustment. Some villages which had fled to other chiefdoms in the Protectorate started to come back while others stayed behind. To-day there are villages here and there which had left their chiefdoms in the confusion and had then joined their present

[1] District Book, Fort Johnston.

2: Mitchell E-5 (1946-1949) 1956 FT7 Yao FT7

The Characteristics of the Three Categories of Headmen

In Table V I have set out the ethnic affiliation of the headmen in the three categories and also the dates of arrival of Newcomers in the Kawinga–Liwonde area. This table shows that

622
563
167

TABLE V

Numbers of Village Headmen who are Aborigines, Invaders and Newcomers

Tribes	Aborigines	Invaders*	Newcomers							Total
			Pre-White	White Conquest—1907	1908–17	1918–27	1928–37	1938–47	Unrecorded	
Yao . . .	—	144	19	60	20	14	13	13	35	318
Mpotola . .	—	53	—	43	21	9	1	1	—	128
Nguru . .	—	5	2	46	58	49	27	14	17	218
Nyanja . .	25	3	1	4	6	1	1	4	1	46
Unrecorded .	—	—	—	—	—	—	—	—	6	6
Total . . .	25	205	22	153	105	73	42	32	59	716

* In Ngokwe area, 39 villages are classified as Invaders who came into Nyasaland as refugees from the Portuguese military actions at the close of the nineteenth century.

easily the great majority of villages has come into the area since the White conquest. On the other hand, only 3·5 per cent are Aborigines. Just over a quarter (28·6 per cent) are direct descendants of the original Invaders or headmen of villages which have branched off from these. The remainder (67·9 per cent) are the Newcomers who have submitted themselves to the Invaders. Far more Newcomers came in during the decade following the White conquest than in any of the more recent decades.[1] We cannot argue directly from these figures that the greatest influx of Newcomers into Nyasaland took place before World War I. Newcomers in the more recent decades may be as numerous but may be passing out of the area more quickly, and therefore are not recorded in my survey. On the other

[1] Nguru immigration in 1908–27 was due to exceptional causes.

2: Mitchell E-5 (1946-1949) 1956 FT7 Yao FT7

622 hand, all villages tend to disappear in time. We should there-
●563 fore expect more of the headmen who came in during the
167 earlier decades to be forgotten, and the trend should be more pronounced than it is. In fact we know from other sources that immigration of the Nguru, who represent about one-half of the Newcomers, was greatest before 1930, and it is almost certain that the figures do reflect the change in the amount of Nguru immigration, and that the factors which may operate against the trend are not important. As a whole the set of figures suggests that immigration is slowly coming to an end.

622 The Aborigines are all Nyanja. Among the Invaders, 70·2 per
563 cent are Yao, 25·9 per cent are Mpotola, and the remainder 3·9 per cent are Nyanja and Nguru. The Mpotola Invaders are practically all in the Ngokwe and Chikweo areas, so that in the other areas (i.e. in Liwonde, Kawinga, Chamba and Mposa) the Yao represent 94·9 per cent of the Invaders; the remainder are Mpotola. Under Ngokwe and Chikweo who are Mpotola chieftains, 54·5 per cent (48 of 88) of the Invaders are Mpotola, and 37·5 per cent are Yao, and the remaining 8·0 per cent are Nyanja and Nguru. Among the 486 Newcomers, 35·8 per cent of the headmen are Yao, 15·4 per cent Mpotola, 43·8 per cent Nguru and 4·9 per cent are mainly Nyanja. In general, therefore, we may say that the Aborigines are all Nyanja; the Invaders are Yao in the major area and Mpotola in the other area; and the Newcomers are predominantly Nguru from Portuguese East Africa, though there is a fair proportion of Yao who have come from other Nyasaland districts.

622 There are significant differences among the three categories of
795 headmen in their religious affiliations. In general there are more
797 Moslems (71·8 per cent) among all headmen than Christians or Pagans. But there are more Moslems among the Invaders than among either the Aborigines or the Newcomers.[1] There are more Pagans among the Newcomers, but the proportion of Christians among the Aborigines and the Newcomers is about equal (25·0 per cent and 21·9 per cent). These differences in religious affiliations are consistent with the different historical backgrounds of the two groups. The Invaders are the descendants of the Yao slavers, who in the past had been in intimate

[1] Invaders = 91·1 per cent; Others = 63·9 per cent; Diff. of per cent = 27·2; S.E. of diff. = 3·7; C.R. = 7·2; $p < 0{\cdot}0001$.

2: Mitchell E-5 (1946-1949) 1956 FT7 Yao FT7

their councillors at the courts. If they were relatives of the chief it is almost certain that he would have mentioned them. We may assume then that the true proportion of unrelated headmen among the Newcomers is, as we would expect, very much greater than among the Invaders. 622 643

Of the total of 424 Administrative villages there were ten in which I did not record the formal relationship to the chief. In Table IX I set out the proportions in these categories among the Administrative village headmen, and there is no radical difference between these proportions and those for all village headmen. 622 643 602

TABLE IX

PROPORTIONS OF RELATIVES AND NON-RELATIVES AMONG ADMINISTRATIVE HEADMEN*

	Chief's Relatives						Non-Relatives	Total
	Direct			Clan				
	Mat.	Pat.	Aff.	Mat.	Pat.	Aff.		
Invaders . .	18 (13·2)	23 (16·9)	6 (4·4)	24 (17·6)	11 (8·1)	9 (6·6)	45 (33·1)	136 (99·9 %)
Newcomers .	0 (0·0)	9 (3·5)	12 (4·7)	20 (7·8)	11 (4·3)	12 (4·7)	193 (75·1)	257† (100·1 %)
Total . .	18	32	18	44	22	21	238	393

$n = 6$; $\chi^2 = 90·5$; $p = 0·0001$.

* This table excludes the 21 Aborigines.

† Excludes 10 villages for which I have not recorded this information.

To summarize, we may characterize the Invaders as Yao, Moslems, and associates of their chiefs by historical connections and kinship ties. The Newcomers and the Aborigines on the other hand are of different tribes. They have more diverse religions, are not connected to the chiefs by kinship ties as closely as the Invaders are, and do not share with them the strong bond of being co-Invaders. It is in the struggle for prestige and rank that these bonds with the chiefs assume significance. 622 643 602 563 554

3:Stannus D-5 (ca. 1912) 1922 FT7 Yao FT7

Both before and after the introduction of guns, the Yao used spears, *lipanga*, and bows, *ukunja*. The spear is a five foot long throwing spear with metal head and wooden shaft. No shield was used. Bows and arrows are made from the wood of the *tesa* or *pimbinyole* tree. The string is made of tendon. A double-bellied bow called *ukunja wa mbama* was sometimes used, but, I believe, originally came from the Anyanja. The arrows, *mpomba*, have a metal arrow-head, and were often poisoned with *kombe*. 411

Hunting. The same weapons are used in hunting: the gun, the spear, and the bow and arrow. Smaller bows and arrows made with bamboo or reed shaft are also employed for shooting birds; one of the arrows has a blunt wooden head and serves to stun the bird. 224 411

From the Anyanja, the Yao learned the use of a harpoon for spearing the hippopotamus. The harpoon is a heavy spear-head of iron about eighteen inches long, attached to a rope and float. From the Anyanja, also, was learned the use of the falling block with spear for killing hippo. [177]

Elephants are caught in staked pits, and the larger antelopes are similarly trapped in pits with the sides sloping inwards towards the bottom, so that as the animal falls lower and lower with expiration, it is eventually suffocated. 224

Small buck are driven by dogs into nets set for long distances in the forest, and then speared or shot. Traps are also set for these smaller antelope and for many other small animals, rodents, etc. Birds are shot or trapped. Bird-lime is also employed. It is prepared from the juices of a number of trees by pounding the vegetable matter in water; the sticky mass so made is applied to sticks or poles. The sticks are placed near drinking places so that the birds alighting to take water become entangled. The poles are affixed to trees so that they appear to be the topmost boughs; this the native does, recognising the common habit of birds to sit on the very top of trees. The strength of the bird-lime is made according to the size of the bird he wishes to catch. [231] 223

Fishing. I am not sure how far the Yao is a natural fisherman. Not long ago he used only a many-pronged spear to catch his fish. Since then, he has acquired from the Anyanja the knowledge of making fish-traps and nets, and of using the fish poison. When the Yao came to live and intermarry among the Anyanja, there was one practice of the latter which they would not adopt and which caused a good deal of ill-feeling. A Mang'anja man coming home after fishing always used to prepare the fish and, leaving some ready to cook, he cooked others for his wife, bringing her water at the same time to wash her hands. After eating her own fish, she cooked the rest for her husband. A Yao would never cook for his wife. 226 [578 563]

Traps. The following is a list of some of the traps I have found in use among the Yao. The sketches will serve to explain their mechanism better than a lengthy description. Some are very ingeniously made, and most recall similar traps made in other parts of the world. 224

1. *Lukonji lwa litsuala*, a trap for the cane-rat (Pl. XIX, fig. 1).

2. *Lukonji lwa mbindi*, a trap for sharp-toothed gnawing animals, so called from

4: Stannus D-5 (ca. 1909) 1910 FT7 Yao FT7
Maravi FR4

NOTES ON SOME TRIBES OF BRITISH CENTRAL AFRICA.

By H. S. Stannus, M.B.

[With Plates XXVI, XXVII.]

With reference to what follows, I deal with the inhabitants at the southern end of Lake Nyasa, more especially those near Fort Johnston. M Y 131

This people is very mixed, the original inhabitants, "Anyanja," belonging to Nyanja stock, one of the many branches of the Bantu, were many times overrun by invading waves from the east, Amangoche, Ajawa (Yao), Machinga, Maraninga, and their territory at this point was also raided from the other side by the Angoni. Though the Machinga may be said to have settled here and be the ruling spirit, the people are more Anyanja than anything else, and their customs, etc., though suffering by being those of a conquered race, yet have survived in great part. Those people are often called the Nyasa, only meaning the dwellers near the Lake, but it is a good collective name now. M Y 563

As far as possible these notes refer to Anyanja and their customs, and added matter and Yao elements have been eliminated; for this reason they will be found to differ in some ways from accounts given by others. M Y 128

Of the average native one may say that his physique is very fair; given regular work and food, conditions such as exist on some of the boats, he develops into a very fine muscular man. A man will carry between fifty and sixty pounds 40 miles in one day, or a number of days in succession covering half that distance per diem. A man could cover 50 to 60 miles in twenty-four hours. He can travel the whole day without food, and would do three or four days' march unloaded without food provided he had water to drink. M 147 482 481

Sensibility to pain is undoubtedly less than in the European, *i.e.*, the native can stand pain well if he be not afraid (*e.g.*, removal of sebaceous cyst without anæsthetic, extraction of teeth, etc.), the pain seems sometimes to be deferred, *i.e.*, in cases of tooth extraction appears to be perceptible a minute after the actual operation. An inflammatory condition seems to cause them intense agony, so that I would say they do not feel pain so acutely, but they do not bear it as well as a European. M 147 151

I would make another contrast, in fighting against disease a native will often go under from sheer apathy, whereas the white man keeps going by his nervous energy. I have seen the reverse in the case of a carrier who went through an M 147 157

643 and determine petty native cases was conferred
622 upon the headmen, though the District Commis-
175 sioner was supposed to seek their advice when
648 necessary.

Therefore, from the time of conquest a pattern of superordination of the Whites and subordination of the Africans was established and the indigenous political system remained largely without official recognition until the Native Authorities Ordinance was passed in 1933. The major change wrought by this Ordinance was that Native Courts were planned and instituted by the Native Courts Ordinance of the same year. At the same time a Native Treasury was founded.

IV. The Present POSITION

643 winga to Portuguese East Africa. They were
175 allowed to return later and they took up their
648 positions in an area roughly outlined in the early
131 part of this paper. At the same time, owing to military action by the Portuguese a certain number of refugees were crossing the border into the Lake Ciuta area of Nyasaland.

TABLE I

Demographic Composition of Political Areas[1]

162
643
631
[563]

Sub. Area	*Tot. Pop.*	*Admin. Vills.*	*Av. Pop. of Admin. Vills.*	*Tribal Composition*			
				Yao	*Nguru*	*Nyanja*	*Ngoni*
				%	%	%	%
N.A. Kawinga (Yao)	23,087	311	74	51	37	10	2
S.N.A. Camba (Yao)	5,119	61	84	72	20	7	1
S.N.A. Mpoza (Yao)	4,411	60	74	49	19	32	—
S.N.A. Chiwalo (Yao)	2,202	19	116	80	15	5	—
S.N.A. Ngokwe (Mpotola)	2,868	21	136	16	43	40	1
S.N.A. Chikweo (Mpotola)	7,102	49	145	28	56	16	—
N.A. Liwonde (Yao)[2]	12,716	106	120	75	20	5	—
N.A. Nyambi (Yao)[2]	7,335	63[4]	116	73	27	—	—

631 that there is a relatively low proportion of Yao in the area whereas the Nguru are well represented. The term Nguru is applied by the Yao to any person from a certain part of Portuguese East Africa. It is indiscriminately applied to a number of tribes, though mostly to the Lomwe who form a congeries of related tribes.

Liwonde sub-district lies to the west of that of Kawinga and it has as its western boundary the Shire River. There is one S.N.A. in the area, Stora, appointed in 1940, but I could not visit him and there is no census information on this group. This new S.N.A. is a sister's son to the present Liwonde and actually stands in the direct line of succession to the name of Liwonde.

Nyambi sub-district is now a part of Fort Johnston District. It lies to the north of Kawinga's area and is small. The relationship of Nyambi to Liwonde and Kawinga has been noted above (p. 147). At the same time it was noted that Nyambi calls Jalasi "my child" (*mwanangu*). Jalasi, who had been a powerful leader, was recognized by the Administration as a superior chief in the area. The Nyambi who was living at the time resented the activities of a person who was genealogically inferior to him and therefore moved from the area he occupied then, to the present position which was under Kawinga at the time (about 1914). When the Native Authorities Ordinance was introduced Nyambi was made an N.A. independently of Kawinga. Recently (1947) the subdistrict under his jurisdiction was transferred from Zomba District Administration to Fort Johnston, largely at the request of the present Nyambi who said that he preferred to be with his own relatives (Jalasi's family).

563 The Table I shows that in some areas there is a considerable proportion of non-Yao under Yao chiefs. The reason for this is that the Yao came into these areas as conquerors, either eliminating the indigenous Nyanja or allowing them to remain there in a subordinate position. Later, from the turn of the century until about 1930, there was a gradual infiltration of Nguru peoples into Nyasaland from Portuguese East Africa. The presence of the different tribal

563 groups presents a problem to be considered but for the main purposes of this paper a brief comment is sufficient.

The Nyanja people who were allowed to remain in the areas, continued to live in their village communities in much the same way as the Yao did. In fact the Nyanja and the Nguru are so similar in culture to the Yao, that it was possible for them to fit into the Yao social structure fairly easily. For example, in Mposa's area Mbande and Mbeta are recognized by the local Yao sub-chief as important personages since they were the indigenous chiefs in the area before the Yao came in as invaders. Both, for example, have adopted the Yao practice of wearing a red band round the head to indicate rank. Both have the right to conduct the Yao indigenous initiation ceremonies. At one meeting I attended Mbande was allowed to sit in a chair while the only other person to do so was Mposa himself. This is a mark of honour since no commoner is allowed to sit in a chair in the presence of the chief.

[554]

[554]

In the same way the Nguru immigrants have come in small groups of matrilineal kin and have settled either in hamlets alone or set up small hamlets in close vicinity to kinsmen. Their headmen in turn have been absorbed into the general political structure though they have their own language and distinguishing cultural traits. Thus some Nguru initiate their boys according to their own *cidototo*, though others will allow their boys

[Text continues top of P. 151B]

V. THE POLITICAL STRUCTURE

642
177

The accompanying diagram is designed to summarize the main types of interaction that take place in the political structure of the three areas. Interaction between the social personalities in the political structure can be said to take place in reference to certain sets of values. One set of values is that which the Yao recognize and believe to belong to the White people. Another set of valuer they recognize and subscribe to as their own. A chief may interact with a village headman because he has broken a regulation which

[Text continues bottom of P. 151B]

563 to be initiated according to the Yao custom (*lupanda*). In general, the Nguru headmen are village headmen in the same way as the Yao are and they follow the same pattern in political behaviour.

563 At the moment, throughout the areas, the various tribal groups live in kinship clusters so 621 that under one Yao administrative headman there may be two or three unrelated Yao kin-groups and possibly one or two Nguru groups living quite separately. Though the population in the area as a whole is mixed, usually the village groups are tribally homogeneous. So far little inter-marriage has taken place. I shall not here analyse this situation, though it is politically pregnant. In many ways the Nguru immigrants [771] are more progressive than the Yao. Most Yao in this area are professed Moslems and do not attend the local schools which are Christian. However, the missions have been more successful among the Nguru and they are becoming more educated and advanced. A good proportion of the Government posts in the area is filled by Nguru for this reason. This is most significant in the context of the general situation as will become apparent in the description below. For the rest of the paper I shall consider the political structure as I see it, in terms of the social personalities in the structure, and the presence of these non-Yao groups is implicit in the rest of this analysis.

V. The Political STRUCTURE

648 642 the Administration has persuaded the chief to 177 pass and the full significance of which lies in a system of European values. These systems of values are foreign to each other in many features. Opposition between the two groups, White and Black, must arise if their behaviour is affected by different sets of values. The Yao, for example, believe that most deaths are caused by sorcery and claim the right to take punitive measures against the sorcerers. The Whites do not believe in this and prevent punitive action against people

648
642
177

who are, to them, innocent. The diagram has been divided obliquely to represent these two systems or fields of values. The division of the diagram into two parts depicts a major rift in local political relationships. While some political relationships, as say between village headmen, do not directly manifest this cleavage, in most, as say the chief with his subjects, though the Whites are not present in person, they are there in the context of the interaction. This will become evident as the analysis proceeds, but at this point it is sufficient to observe that the Whites and the White system of values are an integral part of the modern Yao political organization.

642
177
534
648

In addition to this, there is a hierarchy of status roughly conforming to the placing of the social personalities in the diagram, i.e., the White Administrator is of higher status than the African Civil Service which is roughly on the same level as the chiefs, but both are on a higher status than the Native Authority's clerk and officials are. The lines represent the main direction of interaction.

648
563

1. *The White Administrator and the African Civil Service*

By the White Administrator I mean the District Commissioners, Agricultural Officers and other Government officials who come into contact with the African populations, particularly in the rural areas. The social distance between a White person in general and the Africans is much larger than that between, say, an African chief and his meanest subject. Social interaction on an intimate basis cannot take place between chief and Administrator mainly because their relationship is dominated by the pattern of all South African territories, where White does not interact intimately with Black. I have already stated that not many Europeans come into the area. Those Whites that do come into the area are immediately accorded the status of an Administrative Officer and are apt to be thought of as such, though they may not be so. The Yao clearly recognizes that the Labour Recruiter is a different sort of person from the Missionary and both differ from District Commissioners, but

648 nevertheless the type of behaviour which is normal
563 between Labour Recruiter and African is dictated by the pattern of behaviour of African to Administrator. The Yao find it extremely difficult to separate out their attitudes to these different types of social personalities and the main reason is that they tend to categorize all White people into a general class "Whites" of whom the most common representative to them is the Adiministrator.

647 It is, however, impossible to consider the Administrator without reference to the African
648 Civil Service. I am using this phrase to mean those Africans who are in constant and direct interaction with the Administrator. I include the clerks, interpreters, messengers, policemen, and other intermediaries between the Administrator himself and the people. Probably of major importance is the interpreter who speaks directly to the people on behalf of the Administrator. In Southern Nyasaland the official language is Nyanja and officials are expected to learn it for their official business. Some of the Yao men
[191] in the area under study can understand and speak Nyanja but some men cannot and certainly most women cannot do so. Therefore, the tendency is for the Administrators to make use of interpreters in dealings with the Yao and other peoples in the area. The Administrators do not interact directly with various social personalities but do so rather through either their own civil service or through the N.A.'s Bureaucracy who, being educated, are able to speak and understand the official language. The Administrators are in direct interaction with their own Civil Service and only in indirect interaction with the other social personalities in the political structure.

The African Civil Service stands for a set of White values and for this reason is placed in the "Whites Values" part of the diagram.* The African Civil servant represents the District Commissioner or Agricultural Officer to the tribesman. The Tax Clerk, while he is collecting taxes, is part of the system of the Administrator. The Agricultural Capitao (African official) represents the Agricultural Officer to the villager when he instructs him in the building of contour ridges.

* [See p. 152 — Analyst.]

693 paid by the chief but still advise him, and retain
645 much of the prestige due to their rank, which is inherited. Others have been incorporated as court assessors though they may not actually take part in the duties. Some now combine both sets of duties and function both as councillors and court assessors. Some of the duties of both sets of officials, however, have been taken over by the court clerk and other court functionaries. Although the position of court assessor was part of the old tribal structure, modern court assessors see themselves as occupying a position in a structure largely of White fashioning. I once heard a court assessor when conducting an enquiry into a case of adultery, cut short the prolixity of a witness saying: "None of these long stories. We are conducting this case according to the custom of the Whites."

More illuminating still is the position that the court clerks occupy in the modern structure.
[212] They are differentiated from the vast majority of the population because they are literate. All of them have been educated, usually in a mission
[563] school. A high proportion of them are Nguru because more Nguru are Christian (hence educated) than Yao (see p. 151). Because he can read and write, the chief court clerk is the medium through which the chief expresses himself in writing and the medium through which he gets written information from the Administrators and others. The court clerk is therefore in a unique position of knowing all the business that comes into the chief's hand by letter. He, of course, must also write the replies so that he has a very good knowledge of what is going on in the territory. In addition, because of his education and knowledge of the ways of the White people the court clerk often makes a better councillor than the uneducated and naive traditional councillor does. Therefore in certain matters the court clerk, rather than the councillor, is the chief's most important adviser.

693 The various other officials have different
647 functions to perform, frequently of a semi-technical nature. There are sanitary inspectors, well inspectors, etc. The court sergeant who is present at the cases now performs many of the

2: Mitchell E-5 (1946-1949) 1956 FT7 Yao FT7

chief that he must deal. If we give a present to a village it is to the village chief that we must give it'; and, 'It is when a man transgresses against his own village chief that *personal responsibility* is brought home to him. When he transgresses against another village, his own chief pays for him.'[1] The village headman accepted liability for offences committed by his villagers against members of other villages, but could punish his own villagers by fines and by putting them into slave-sticks. Within the village, according to MacDonald, 175 622

> The headman cannot make his villagers hoe his farm for him, or do such private work. Neither does he exact tribute from them. . . . Still he expects them not only to stand by him in war, but to support his government on all occasions, and to render special assistance in the trial of judicial cases. . . . He may pronounce a capital sentence, or order as large a penalty as the fine of four slaves—especially if he be a higher headman. But his judgements may be complained of by any of his free subjects (only such appeals are rare, unless by parties that want to leave his village altogether). His decision may be revised by some other headman, as the ruler of the village from which his own settlement broke off; but the ultimate appeal is to the chief of the country. While the village headman settles all smaller disputes without troubling the chief, he usually reports graver cases.[2]

The Chief and the Village Headmen: the Political Process

The village headmen in any particular area recognized the superiority of one of their number, the chief of the land (*asyene cilambo*). MacDonald classifies the headmen under one chief as follows: 175 565 622 643

1. Chief's blood relatives, usually called 'younger brother'.

2a. Settlers or refugees (*alambi*) who have come over with a large following from a hostile chief.

2b. Men who have gained the chief's favour by their services and been sent to occupy new spots in the kingdom.

'Other village headmen arise when a large village increases and sends forth smaller hamlets.'[3] All in the territory of a chief were integrated by a chain of authority. As he explains,

> 1. Headmen are under higher headmen and under the chief.

[1] MacDonald, *Africana*, i, 186. Original italics.
[2] MacDonald, *Africana*, i, 153. [3] MacDonald, *Africana*, i, 156.

2: Mitchell E-5 (1946-1949) 1956 FT7 Yao FT7

175 2. Free men are under their elder brother in the first instance, but
565 they may carry their cases to the headman of their village or
622 even to the chief of the country.
643 3. Slaves were entirely under their own master.[1]

The headmen's subservience to the chief is described in the following passage:

In all public transactions the headman represents his village. He receives the chief's orders and sees them carried out. When he kills an elephant he sends one of the tusks to the chief. Should he kill [651] twenty elephants he is not expected to give up twenty tusks—two or three would be sufficient. If he shoots a large buck he gives one haunch of venison. For all such tributes he expects to receive in return a present (generally a little powder). . . . He is expected to [646 attend the chief's parliament unless he is under an elder brother in 593] which case he is not allowed to speak, except when especially commissioned. Headmen are expected to report all cases of war, but they often attack enemies without telling their chief beforehand, saying, [721] 'Let him hear of the enterprise when it succeeds.' Yet this is dangerous unless they are sure of success, and well acquainted with the chief's private sentiments. On reporting an attack they present the chief with part of the booty. In times of war each headman when summoned, must follow his chief's flag, otherwise his village is burned [687] down, and all that fail to escape are killed or enslaved.[2]

175 Yet within the framework of this organization villages were
578 markedly autonomous. MacDonald's description, which I have
622 just quoted, brings this out very well. Elsewhere he writes:
643 'The chief may often have less influence than powerful headmen, and we have known cases where he simply contented himself with grumbling when his headmen acted contrary to his desire.'[3] The chief did not differ greatly from his more powerful headmen. A certain amount of ritual in terms of ancestor worship embellished his position, and he had some ascendancy over village headmen to whom he had given land. Yet, in the last analysis, the chief had to rely on his personal following and military power to subjugate headmen who were becoming too powerful. The chief was therefore in direct competition with his subject village headmen, and involved in a constant struggle with them for followers. MacDonald describes how the chief himself was a

[1] MacDonald, *Africana*, i, 155.
[2] MacDonald, *Africana*, i, 157. [3] MacDonald, *Africana*, i, 155.

1: Tew E-4 (no date) 1950 FT7 Yao FT7

even competing with the Arabs for the inland trade.[1] At some uncertain date there were two migratory movements away from the original home of the Yao. The first was a scattering from Hill Yao to surrounding hills, possibly due to internal dissension.[2] The next movement was caused by an attack of the Makua between 1850 and 1870.[3] One party moved northward, finally settling in Tanganyika, as has been mentioned. Four parties moved south into Nyasaland.

(α) *Achisi Yao*, who first moved from Mwembe to Mchisi hill, and then to Nyasaland, where they are represented by those under Katuli Native Authority.

(β) *Amasaniqe Yao*, who first moved to Lisannings hill, near the Lutwisi river, and then to the south-east of Lake Nyasa, where their descendants are now under Makanjira Native Authority.

(γ) *Amanguche Yao*, first went to settle at Manguche, near Fort Johnston. They were later driven out of Manguche, by the last group, and scattered.

(δ) *Amachinga Yao*, first went to the vicinity of Mandimba hill, near the source of the Lujenda river. They were ousted from this fertile valley by the attacks of the Lomwe, and came into Nyasaland in four parties.

One party of Machinga Yao under Nkata (later called Jalasi, or Zarafi) attacked the Yao at Manguche, drove them south and themselves finally settled there. Another party under Nsamala came with Nkata as far as Manguche, then turned off to Chisui hill in the Fort Johnston area. A third group, under Malemia and Mtumanja, moved down to the Domasi valley via Isale hill, where they were attacked by the fourth Machinga group, under Kawinga. The latter had also accompanied Nkata's party as far as Manguche, then crossed the Shire river to the west; here they were attacked by the Maseko Ngoni under Chidzonga and moved south-east to Chikala, which they occupied until defeated by the British. Liwonde, the brother of Kawinga, moved to the Shire river.

The Amanguche Yao, after they had been scattered by the Amachinga, settled some in the Chirunda part of Dedza district, some at Mount Zomba, some migrated to Ndirande hill near Blantyre, some to Soche hill, some to Chiradzulu, Ngulubi, Malawi, and Ndudu hills. These Amanguche Yao constitute about half the Yao population in Nyasaland.[4]

The Yao invasion of Nyasaland was not an organized military expedition, like that of the Ngoni. The first immigrants came peacefully in small kinship groups. They took advantage of Nyanja factions to consolidate their position, until, by 1876, when the Church of Scotland Mission was established at Blantyre, the Yao were a ruling class dominating the earlier inhabitants.[5] At the same time they vigorously carried on their slaving activities. In 1893 Thompson noted that the fertile country of the watershed between the Ruo and the Shire rivers was uninhabited because of Yao raids.[6]

The Yao of Nyasaland suffered from Ngoni raids, but were never subject to them. Several tributes have been paid to their soldierly qualities,[7] and indeed it took five years from 1891, when the Protectorate was declared, before the Yao were subdued and the slave trade, to which they had been principal parties with the Arabs, sup-

[1] Burton, 1873, p. 35.
[2] Abdallah, 1919.
[3] Hetherwick, 1922, p. 7; Murray, 1931.
[4] Historical notes in unpublished administrative papers.
[5] Du Plessis, 1919, pp. 196 and 304.
[6] Thompson, 1882, p. 99.
[7] Sharpe, 1897, p. 10, and Brigand, 1919.

1: Tew E-4 (no date) 1950 FT7 Yao FT7

pressed. Two contingents of Sikhs were sent unsuccessfully to take Kawinga's fortress in Chikala in 1894; Makanjira was defeated in 1894, Kawinga, Jalasi, Matipwiri, and Tambala in 1896.[1] They were later allowed to return, but they were not recognized as chiefs by the Administration.

The end of tribal wars and of slave-raids made large defensive settlements unnecessary, and the peace saw the splitting up of communities, which rendered the task of the Administration more difficult. The abolition of domestic slavery, by reducing the power of headmen, further contributed to the tendency to live in small scattered settlements. In 1912 the Nyasaland District Administration Ordinance was passed with the object of concentrating the villages into larger communities.

The first movement of Yao from Portuguese East Africa to Masasi took place about the end of the 1890's. According to one account they were originally expelled from the territory between Matola's and Unangu by the Mascko Nguni.[2] Then the Makua attacked them, breaking up the tribe still more, so that they migrated north to Masasi, the south-west of the Makonde plateau, and the banks of the lower Ruvuma. At Masasi they were again attacked by Nguni, but defeated them, and then retired to the Makonde plateau, where they were again attacked by Nguni. There is a tradition that at some time after 1850 the region was toured by an emissary of the Sultan of Zanzibar, 'Bakiri', who gave the whole country to Matola, a Yao chief, to rule from Newala. In the area between Masasi and the Ruvuma river the Yao are in a majority and politically supreme over their neighbours the Makonde, Makua, Ngindo, Matambwe, and Ndonde.[3] At Mtua, on the Makondi plateau, there is a settlement of Yao who were rescued from the Nguni on the east shore of Lake Nyasa by Captain Engelhardt, and transferred there. These in outward appearance could hardly be distinguished from the Swahili of the coast.[4]

DEMOGRAPHY

The Yao population of Nyasaland has increased steadily but its relation to the total population has not increased:

1921		1931		1945	
Yao population	*Percentage of total population*	*Yao population*	*Percentage of total population*	*Yao population*	*Percentage of total population*
185,563	15·0	246,513	15·0	280,177	13·74

Even in the predominantly Yao areas the population is not homogeneous, either tribally or linguistically. In the three areas in which there are a large number of Yao (Kawinga and Liwonde of Zomba district and Nyambi of Fort Johnston), they represent roughly 48·6, 75, and 73 per cent. of the total population, the next most important section being *Nguru* (Lomwe) immigrants from Portuguese East Africa.[5] Some Nguru call themselves Yao when questioned.

The density in these areas is respectively 65·5, 32, and 52 per square mile.[6] This

[1] Cadenguan, 1898, p. 520; Monghom, 2, 1902, pp. 88, 120-6, 132-3; Scheer, 1893, p. 402.
[2] Livingstone, 1874, p. 32.
[3] Ibid. p. 48.
[4] 1945 Census.
[5] Wade, 1909, pp. 108-48.
[6] Mitchell and Cannon, 1926, 1931, and 1945.

1: Tew E-4 (no date) 1950 FT7 Yao FT7

completely exhausted or reduced to a mere trickle. The average annual rainfall over the last ten years is 29·75 in. The shore waters of Lake Pamalombe are well stocked with fish: Both districts are well wooded, with a large variety of timber trees. In the dry sandy soil where the population is unable to live for lack of water, the prevalent type is *tsanya*. A line of foothills from Zomba to Chikala are conserved as Forest Reserves.[1]

MAIN FEATURES OF ECONOMY[2]

The Yao are chiefly agriculturists, and in the old days were also hunters. As they live largely in tsetse-infested areas, they do not keep cattle, except for a few herds near Fort Johnston and Zomba, in Nyasaland, and on the east of Lake Nyasa,[3] in the mountains of the Ruvuma valley around Mataka's.[4]

Abdullah describes a time when the Yao were economically self-sufficient, making their own bark-cloth, weaving, burning herbs for salt, and working iron for the tools they needed. Nevertheless, the tradition of coastward journeys for trading with the Arabs was well developed before the Europeans came to the country. They used to trade cattle and salt from the Manganja and Lomwe for tobacco and hoes, and in exchange for slaves they got from the Arabs gunpowder, guns, swords, beads, coloured cloths, earthenware, and foodstuffs.[5] Slaving expeditions were among the most important activities of the chiefs.[6] The old tradition of the absence of the men from the village owing to these expeditions, is continued in modern times by soldiers and labour migrants to Southern Rhodesia and the Union. These men send back remittances to the area, but the main population is supported by agriculture. Cash is needed for purchasing salt and cloth, for paying certain dues and fines formerly paid in kind—adultery compensation, diviner's and initiation fees—as well as for tax and rent. Consequently, while certain crops, such as tobacco and ground-nuts, are grown for cash, any food crop is liable to be sold in one form or another in local markets or by the roadside.

The food crops are maize, sorghum, finger millet, sweet potatoes, ground-nuts, legumes. Fish is an important article of diet. Eggs are believed to cause sterility and are only eaten by those outside the child-propagating age; milk is disliked and never consumed.[7] *Termite alates* (flying ants) are a much relished food when they come out on nuptial flights. Rice is considered a superior food, and is eaten when possible on ritual occasions.[8]

Tobacco is the main cash crop, with individual production under the supervision of the Agricultural Department. The average cash earned per grower in 1943–4 was £5. 3s. This is overwhelmingly an external trade. Ground-nuts, which are sold at government-controlled markets to licensed buyers, bring in only a few shillings a year to the average seller. Women obtain cash by selling beer. At the lake shore the fishing industry is very important. Natives owning big nets are said to make between £20

[1] Murray, 1932, pp. 147–61.

[2] Unless otherwise stated, the information is from J. C. Mitchell, and relates to the Yao of south Nyasaland.

[3] Livingstone, 1874, pp. 72 and fn.

[4] See Livingstone, 1874, p. 68; Young, E., 1877, p. 130; Thompson, 1882, p. 78; Sohier, 1895, p. 420; Monteiro, 2, 1902, pp. 86–7; Lewis, 1924, pp. 32–3.

[5] Young, E., 1877, p. 100.

[6] Abdullah, 1922, pp. 10–11, 28–30.

[7] Sohier, 1924, p. 24.

[8] Sanderson, 4, 1922, p. 34.

1: Tew E-4 (no date) 1950 FT7 Yao FT7

expressed also in the speeches by the marriage sureties. The couple are exhorted to refer disputes to the sureties, and to consult the diviner in case of sickness.[1] After the rite these two sureties have special responsibilities towards the couple; grievances are referred to them, and they must be present when adultery cases are heard in court. If the marriage witness ceremony has not been performed, the relationship is not regarded as legal and no adultery compensation can be claimed by the husband. 585

Divorce used to be a private affair, which was merely signalized by one party giving to the other an arrow as a token of separation.[2] Nowadays all divorce cases go to court. The woman is usually asked to choose between her husband and the adulterer, and the compensation paid to the former, if she decides to leave him, is higher—amounting to about 10s. A man can be sent away from the village by his wife's kin, but if he has given no grounds for divorce he can claim compensation and will also take back any gifts made to his wife. A few small gifts to his mother-in-law are not reclaimed. Divorces are easily obtained and frequent. Grounds for the divorce of a man may include failure to pay hut tax, one of the specific duties of the husband. 586 [473]

The custom of making a marriage payment is recorded by Johnson[3] (on the east coast of Lake Nyasa) as a relatively new adoption. When given it is divided between the bride's father, mother, and mother's brother and brother.[4] 583 177

Slavery

Domestic slavery was an important institution in the Yao social system. Slaves were obtained by capture, purchase, or in compensation for injury.[5] A man would pay a debt by giving slaves (wives or members of his matrilineal kin group) to his creditors.[6] A man might voluntarily enslave himself to a man having charge of many women, as a means of obtaining a wife.[7] The children of a free man and a slave woman were not emancipated, as their father could not take them from the village of their mother's master, who had the right to sell them.[8] Slaves took part in the ordinary life of the village; women slaves ranked as junior wives of their masters and shared the usual work of women. Men might be supplied with guns for hunting or might accompany their masters to war, trade for them, spin, weave, sew, make baskets.[9] The institution of domestic slavery was an expression of a dominant motif in Yao culture—the association of status with a large number of dependents. Its abolition by the British was in itself a major blow to the prestige and authority of the chiefs. 567 [554]

Information about the social organization of the Yao in Portuguese East Africa is scanty, but it is in agreement with what is known of the Nyasaland Yao; Heckel, who knew the Yao in Lindi district, Tanganyika Territory, confirms the correctness of Stannus's account of the South Nyasa Yao. 184 602

The Yao came into Nyasaland in small parties of kinsmen. Their experience and their superior weapons soon enabled them to dominate the Nyanja among whom they settled, and today they dominate the population of the Southern Province. They are organized into loose groups of villages, under petty, independent chiefs. They seem 175 [621] [631]

[1] Stannus, 4, 1922, p. 223; Hynde, 1895; Johnson, 3, 1902, pp. 69–73; Macdonald, 1882, vol. 1; Werner, 1906, pp. 129–32.
[2] 1902, pp. 70–3.
[3] Stannus, 4, 1922, p. 280.
[4] Stannus, 4, 1922, p. 280.
[5] Werner, 1906, pp. 132–3; Stannus, 4, 1922, p. 237.
[6] Stigand, 1909, p. 120 (not a reliable source).
[7] Macdonald, 1882, vol. 1, pp. 166–7.
[8] Werner, 1906, p. 273.
[9] Ibid.

1: Tew E-4 (no date) 1950 FT7 Yao FT7

office tended to become hereditary. Each councillor had his own village which he administered as a headman. A second set of officials were the court assessors, *mapungu*, who, unlike the councillors, were not in charge of villages of their own in addition to their court duties. Their office was not hereditary and they were chosen for their wisdom and their debating ability. They lived at the court of the chief and their main duty was to sift the evidence in the judicial cases which came before him. 631 [692]

The village headmen were expected to send elephant tusks to the chief (receiving small gifts in return), and to invite him to a yearly beer drink. Like the chief, the village headman governed through a council of the most important men in his village. They constituted a kind of village court over which he presided, and in the old days he could give capital sentence, or award a fine of as many as four slaves. Appeal from his decision lay to the court of the superior headman, or to the chief. Important cases would be reported direct to the chief. Most crimes would be settled by compensation. In cases of murder, several slaves were paid to the kin of the victim, and a fine for spilling blood to the chief. When compensation was handed over, the recipient always returned some part of it as sign that friendship was restored.[1] [651] 631 692

Macdonald's further account of the treatment of crime shows how weak was the political organization, in spite of the apparent orderliness of the system of inferior and superior courts. A murderer caught red-handed might be killed at once. If captured alive he might be ransomed on payment of a fine of from four to twenty slaves, some of whom might be killed to accompany the dead. If the murderer escaped a relative of his would be captured and ransomed. This applied to murders occurring among parties friendly to one another and living in the same village. If the murderer was from another village, the injured village, if strong enough, would fall upon the other and kill and enslave the inhabitants. If not strong enough, the chief might be called in to help to annihilate the guilty village.[2] 696 [567]

Modern Administration

631 622 178

In the whole of Nyasaland there must be between thirty and forty Yao chiefs. In the districts of Liwonde, Fort Johnston, and Zomba, where 60 per cent. of the Yao population is concentrated (1931 boundaries), there are at least fifteen such chiefs. Not all those who have the rank of chief in the old Yao system are recognized as Native Authorities or even as Sub-Native Authorities by the Nyasaland Administration, and many Sub-Native Authorities would be full chiefs in the Yao system, and quite independent of the Native Authorities under whom they are placed.

Nowadays the chief has lost many of his former claims to status. He no longer has monopoly of the trade to the coast, for goods are brought in by Indian traders and bought by African tobacco growers or returned labour migrants. He can no longer use his slaves to increase his wealth by running slaving expeditions. His tribute of food and ivory has ceased, and he can no longer entertain lavishly, but he is still expected to give burial cloths and to make gifts to headmen on their succession to office. Some of his councillors have been made court assessors, and are paid for those duties, but others are expected to work for him unpaid. Some chiefs do reward councillors who retain their traditional status but are not officially recognized as assessors by the

[1] Macdonald, 1882, vol. i, pp. 156-8; Stannus, 4, 1922, p. 279.
[2] Macdonald, op. cit., pp. 170-1.

2: Mitchell E-5 (1946-1949) 1956 FT7 Yao FT7

439 that the Yao occupied in Central Africa as middlemen and traders. As far back as 1798 Laçerda described the Yao rôle as active traders. They bartered ivory, slaves, beeswax and tobacco with the Arabs along the East Coast of Africa for guns, gun-powder, cloth and beads. We cannot easily estimate what proportion of the population was engaged in whole-time slaving and trading. The larger proportion must have found it necessary to cultivate their gardens of finger-millet and sorghum in the rainy season to supply them with the major food crops. It seems likely that slave-raiding and trading were occupations mostly followed during the dry season.

The Yao therefore had become accustomed to a variation of activities and division of labour, at least a century before the Whites came to Nyasaland. Their wants at this time had already become sufficiently diversified to include cloth, beads, gun-powder and guns. All these trade goods are more durable than the foodstuffs which are the measure of wealth among a people who support themselves entirely by their own produce. But the individual want for these trade goods was limited, and the Yao used their surplus rather as capital for trading farther inland with other tribes.

436 There is considerable evidence, both from my informants and
439 the writings of early travellers, that these trade goods—ivory,
cloth and slaves—came to be used as currency, and most people
567 recognized a fixed relationship between the three commodities. A female slave could be exchanged for an amount of calico or ivory that was constant over fairly large parts of Central Africa; the value of a tusk of ivory could be expressed in calico in the same way. By enterprise, therefore, in trading and raiding,
439 an individual could accumulate wealth in the form of calico, guns,
556 beads, ivory or slaves. But the personal consumption of trade
567 goods is of necessity limited, so that the Yao preferred to accumulate their wealth in the form of slaves. The reason for this lies in the general political structure of the early chiefdoms, which I describe later. Slaves were not only labourers and serfs; they also increased the military and political power of their masters. At the same time slaves could be sent to the coast in a caravan and bartered for cloth, or, since they were always prized, they could be used to settle claims for compensation from aggrieved neighbours. The slave trade therefore, although related to domestic

2: Mitchell E-5 (1946-1949) 1956 FT7 Yao FT7

slavery in that a trader could at any moment send some of his own slaves to the coast, was actually quite a separate institution.

Although the advent of the White Administration stopped both domestic slavery and the slave-trade to the coast, both of which were vitally important elements in Yao economy, it did nothing to decrease or reduce the variety of the wants of the Africans. On the contrary, it obviously increased those wants. The missionaries, who were the first Whites to settle in Nyasaland, were forced to import large quantities of cloth and beads so that they could buy foodstuffs and pay their labourers. They quite unintentionally, therefore, became competitors with the Yao in this trade. By some accounts their goods were both superior and cheaper. As early as 1878 the African Lakes Company was sponsored by the Church of Scotland Mission, so that it could take over the trading part of their dealings with the Africans. The planters and traders who began to settle in the highlands after 1890 brought more and more cloth, beads and other trade goods into Nyasaland to pay wages and buy foodstuffs.

When the Protectorate was proclaimed in 1891 and the Administration started to put down domestic slavery and the trade in slaves to the coast, the monopoly of trade in goods fell directly into the hands of the Whites. After 1893, when coinage was introduced, the economy of the country rapidly changed from one based on barter with slaves and ivory as the main outgoing commodities, and slaves, calico, beads and brass rings as the incoming commodities, to an economy in which the wants had become even more diversified. In 1895, the *British Central African Gazette* could record:

> The wants of the people of this part of the world not long ago were limited to sufficient calico to clothe the family, but in one short year their wants now include boots, size and quality a minor point, turbans, coats, and in fact at a distance the half-naked native of yesterday has the appearance of Sikh soldiery.[1]

That the Yao took to the use of money is illustrated by the Acting Commissioner's statement in 1897: 'The Yao thoroughly appreciate having a currency. It has proved, in fact, a great step towards civilizing the native of this part of Africa. He is now able to accumulate his earnings, which formerly in the days of a

[1] Vol. i, 2 (Sept. 26th, 1894).

2: Mitchell E-5 (1946-1949) 1956 FT7 Yao FT7

village headman and had to administer his slaves and relatives in his village in the same way as a village headman.[1] MacDonald shrewdly observes :

175 578 622 643

> Where the chief sees occasion to interfere with his subordinates he generally consults his own interest. He will say to a headman, 'I see that you have been behaving badly to that subject of yours. You cannot get on with him: he must leave you and come and dwell in my own village.' The chief thus secures another servant.[2]

Another writer observed, 'As a chief's power consists of the number of his subjects the loss of a man is a serious matter.'[3]

175 622 643

A village headman also tried to strengthen his position against the chief and against other village headmen by attracting to himself as many followers and dependants as he could. The process whereby a man might increase his status is described as follows :

556 567

> However large the settlement may become, the man that is first in the field is the chief or headman. In course of time he adorns his position by acquiring wealth. He may shoot some buck and get possession of their skins. With these he goes to the Mangoni country and buys slaves. An old person he obtains for a single skin, but a young slave costs two, and women cost much more than men. The female slaves thus bought are his junior wives and he keeps them busy in hoeing the farm, and all such female duties. The male slaves he employs in farming, building, making baskets, sewing garments and such masculine pursuits. He keeps all these persons strictly at their duties, and at the same time welcomes an opportunity of selling them at a profit. If his daughters were unmarried, he would give them slave-husbands. The natives aim at 'replenishing the earth and subduing it'. As it is no expense for them to rear families, they are all desirous to have many children.

Besides this increase of the village from the chief's own resources, there may be an accession of freemen. After the settlement is begun, a man may come to its founder and say, 'I wish to live with you.' The village chief gives him permission and calls him 'younger brother'. The newcomer brings his family, builds a house, and cultivates a farm in the same way as his chief. A freeman may leave his present chief and take up his abode with another, whose subject he becomes. His former chief has no longer any authority over him

175 622 641 643

[1] MacDonald, *Africana*, i, 154. [2] MacDonald, *Africana*, i, 155–6.
[3] Hynde, R. S., 'Among the Machinga People', *The Scottish Geographical Magazine*, viii (1891), 656–63.

2: Mitchell E-5 (1946-1949) 1956 FT7 Yao FT7

tenance of the whole state under a new king,[1] but the Yao political units seem to have split into two factions when divisions appeared within them. The dissident faction left the parent chiefdom and established itself somewhere else as an independent entity.

The picture my informants have given me substantiates MacDonald's account, though his contact was mainly with Mangoche and not with Machinga Yao. My informants, however, placed greater emphasis than he did upon the importance of trade with the coast. A slave-trading trip was not a venture which the ordinary village headman could undertake with equanimity. The journey to the coast, to Quilimane or to Kilwa, was long and arduous, and strong military protection against bandits was needed. A caravan could only be sent by a chief or someone of like status, so that the coastal trade became the monopoly of the chiefs. Headmen who had ivory and slaves to send to the coast included them in the chief's caravan. When it returned, the headmen were able to collect calico and beads to the value of their contribution. Gun-powder also seems to have been a chief's monopoly. Thus, in fact, he did have some physical control over the military activities of his subject village headmen, since he could withhold supplies of gun-powder if he wished. But in a society where minor chieftains were inimically poised against each other, the maxim 'a chief without people is nothing' had much more significance than it has to-day: a village headman's ultimate sanction was that he could withdraw his support from one chief and give it to another.

The Effects of White Conquest

It was into a society thus organized that the first Missionaries came. I have already described how the Missionaries, by taking in runaway slaves, and by occasional armed combat, entered into political relationships with the chiefs. With the establishment of the Protectorate, the policy, clearly expressed in Sir Harry Johnston's letter,[2] was to stamp out slavery. This was done in numerous campaigns against the Yao chiefs [3] so that by

[1] See Gluckman, M., 'Succession and Civil War among the Bemba: An Exercise in Anthropological Theory', *Human Problems*, xvi (1954), 6–25.

[2] See f.n., p. 29.

[3] See Chap. II, pp. 29–30.

2: Mitchell E-5 (1946-1949) 1956 FT7 Yao FT7

began to appear in the Territory. The chief in this situation had the same wants as his subjects but was in no way able to satisfy them. He was precluded by his position from becoming a labourer and thus securing a cash income, while his subjects, until recently dependent on his monopoly for their wealth, had been drawn into the new economy of the Protectorate and were comparatively affluent.

The cessation of warfare and slavery thus affected the prestige of the chiefs seriously. The Administration's policy was at first to impose a fine of guns on those who broke rules. In July 1894, for example, Chapola village on the south-west corner of Lake Malombe was fined 30 guns for being in possession of slaves.[1] Later the Administration introduced an ordinance requiring the registration and licensing of guns, and many guns were confiscated on account of breaches of this regulation. Not only were the Yao disarmed, but the Administration also punished those who broke the peace. At the same time the Government was pursuing an active policy against domestic slavery. For example, in the village of Chapola mentioned above, 26 slaves were released. The slaves, formerly bound to their masters by the physical sanction of being liable to death at his hands in cases of desertion, were now liberated. It is not surprising to find the Collector at Mlanje reporting, in 1895, that the power of Kuntirimanja and Matipwiri was failing, and that they were losing people.[2]

Statements of informants confirm that slaves were then starting to leave their erstwhile masters to set up villages of their own. In 1904, the Administration reported: 'The tendency is for the old large communities to be broken up; for the small man to collect a surrounding of friends and go off and build new hamlets in other localities'.[3]

From my own investigations, there appear to have been two possible reasons for this. First, communities may formerly have lived in consolidated groups in order to protect themselves from slave-raiders and other assailants. With the disappearance of the slaver and of war, the bond of the need for security would,

[1] *B.C.A. Gazette*, i, 10 (July 28th, 1894).
[2] *B.C.A. Gazette*, ii, 8 (June 15th, 1895).
[3] *The Annual Report of the Territory, 1903–4*, quoted by S. S. Murray (ed.), *Handbook of Nyasaland*, Crown Agents for the Colonies (London, 1932), 188.

2: Mitchell E-5 (1946-1949) 1956 FT7 Yao FT7

175 therefore, be weakened, and the component parts of the village
●567 scattered. This is what the Administration argued when it
621 wrote about the split-up of communities: 'This tendency is to
648 some extent gratifying, in that it originates in the native's sense of his complete security under the existing Government.'[1] I have not much evidence that this is true, and in fact do not think it is. Second, there is little doubt from my village histories that the slave-groups attached to various village headmen were deserting their former masters and setting up independent villages.

175 It is significant that the report speaks of the 'old large com-
361 munities'. Duff MacDonald, writing of the Blantyre area in
621 the period 1877–81, says: 'Usually the natives live in small
648 villages containing 10 or 11 huts, occasionally in large villages containing three times as many. They do not like to pack themselves closely. In time of peace few villages contain more than 100 people.'[2] Hynde, writing of the Domasi area, says: 'Sometimes a village consists only of five or six huts; more commonly twelve or twenty and rarely above thirty. The chief's village at Domasi consists of more than 100 houses but that is an exceptional case. The villages occur at intervals of quarter to one mile.'[3] In July 1895, the Collector at South Nyasa made a census of all the villages on the west bank of the Shire (64 villages). These were mainly Yao, but also included some Nyanja. The modal size of villages, calculated from his published figures, is 26 huts.[4] The reports of MacDonald and Hynde agree well, although they describe different areas. The Collector's average was slightly larger, but one is not sure that he has not included two or three settlements under one headman. A village, Changali, was marked as having 217 huts, but a note indicated that they were scattered. Also the numerical accuracy is not above question because a large proportion of hut totals end in 0 or 5, indicating estimation rather than enumeration. From my own observation, the arithmetic mean of a sample of 37 villages in two separate areas was 11 huts (mode was 8 huts).

It seems, therefore, that the optimum size for Yao villages has always been about 10 to 15 huts, and that the disintegration

[1] *Annual Report of the Territory, 1911–12*, Murray, *Handbook*, 128.
[2] MacDonald, *Africana*, i, 145.
[3] Hynde, R. S., 'Among the Machinga People'.
[4] *B.C.A. Gazette*, ii, 3 (Sept. 1895).

2: Mitchell E-5 (1946-1949) 1956 FT7 Yao FT7

622 *amilasi* is used for bamboos and once an informant when pressed
643 told me a tale of a group of people who in dire starvation ate
614 bamboo leaves and were thenceforth called after the bamboos. This story, however, was discredited by others and I pass it off as unimportant. There is, however, some evidence that the words *apiri amilasi*, *ambewe* and so on, are commonly used in Nyanja, and possibly amongst the Lakeside Tonga who were once part of the Marawi peoples, for objects other than clan-names.

614 Informants say that people with the same clan-name could not
582 marry in the past,[1] so that the clan appears to have had the characteristics of an exogamous descent group. The position to-day is vastly different. Not only do people take the clan-names of their fathers, but many young people do not even know their clan-names at all.

614 At this point I should make it clear that the modern confusion
611 about clan-names is no doubt partly due to the emphasis placed on patrilineal descent by the purveyors of White culture, the
567 Administrators and the Missionaries, and also by the same emphasis in Islamic tradition which has influenced most Yao groups. Another factor in the situation is that slave descent still markedly affects social relationships in modern Nyasaland. Its significance here is that when a man took a slave-wife in the old days, his children by her took his clan-name, and not hers. Patrilineal descent of the clan-name therefore tends to point to the slave origin of a person. People who are able to point to a freeman ancestry are proud of this fact and are proud to be able to claim a clan-name associated with a long line of matrilineal ancestors, particularly if there were some well-known men among them. On the other hand, I found it a fairly safe indication that, if I could find no information about an ancestress, particularly her clan-name, then I was dealing with a group descended from a slave. A third factor is that some people
614 explained their lack of knowledge of a clan-name by the state
611 of social unrest and confusion at the end of the last century. As a result of the incursions of the Ngoni, Nguru and slave-raiding Yao and Arab groups, and finally the punitive expeditions of the British and the Portuguese, villages were destroyed and groups annihilated. People lost contact with their relatives, even

[1] Confirmed by Hynde, R. S., 'Marriage and relationship among the Yao', *Nyasa News*, vii (1895), 217–18.

2: Mitchell E-5 (1946-1949) 1956 FT7 Yao FT7

622 robes (a gown not unlike a woman's dressing-gown), wears a
554 bright-coloured turban, and has one or two men walking behind
293 him, he is a rather important village headman. One particular item of clothing in the Kawinga, Liwonde and Nyambi areas, is the scarlet headband which some village headmen may wear. I shall discuss this later in the context of the competition of village headmen for rank.

622 Another external characteristic of rank, which seems to have disappeared with the changing economic structure of Nyasaland,
554 was the carrying of knives (*nsinjo*) by important village headmen.
411 Previously, status was indicated by the type and size of knife carried in public. The chief usually carried the largest and most ornate. The knife taken from Kawinga on his surrender in Portuguese East Africa was about 18 inches long and had a decorated ivory handle. Smaller knives of similar pattern belonged to his headmen.[1] Nowadays, many young commoners carry knives two or even three feet long, made from the broken blades of motor-car springs.

622 The right of important village headmen to build fences[2] at the back of their huts is also a mark of prestige which seems to
554 have lost its significance. About 50 years ago only important
351 headmen had the right to erect a fence at the back of their huts. This fence, made of tall grass about six feet high, enclosed the
[562] grain stores and other food supplies of the household and formed a private compound in which the headman's wife and slaves carried on their daily tasks.[3] It seems likely that private compounds and slavery were positively associated, so that only the important village headmen who had many slaves found it necessary to build fences. All chiefs and most important headmen to-day still erect these fences. Those who hold initiation
[88] rights are obliged to build them because, when the initiands return from the seclusion phase of the initiation ceremony, they are supposed to spend one night in the headman's private compound before going back to their villages. But nowadays, minor village headmen and commoners also frequently build these

[1] See fn. 4, Chap. II, p. 38.

[2] *Lanje*, pl. *ndenje*. The enclosed space or 'compound' is *cimbundi*. Typical fence compounds are depicted on Plate IX (*a*) and (*b*), facing p. 206.

[3] MacDonald suggests that the common term *kuyeto* for woman is derived from the adverb *kuyeto*—on the other side (of the fence).

2: Mitchell E-5 (1946-1949) 1956 FT7 Yao FT7

the significance of this formulation of his position is clear. It is when he shows partiality that the village under him is likely to break up. If he sides with his children his matrilineal kin are almost sure to move out; if he sides with his matrilineal kin, his children are likely either to return to their matrilineal village or, if they are adult, split off to set up a village of their own. The situation is precarious for the headman and it is very difficult for him to avoid a split in the village if he cannot keep the two opposed groups at peace.

My investigations show that few villages have contained patrilaterally-linked groups through the lives of two village headmen, unless these groups were descended from slaves. When the headman dies his successor assumes his name and social rôle. He also assumes the position of father towards the remaining children, who are in fact his cross-cousins. But his relationship towards them is not the same as that of father to children. The intimate link of the blood tie has been lost and the relationship becomes formalized. As more and more headmen succeed the genealogical link between the patrilaterally-linked groups and the dominant matrilineage becomes more and more remote, and the relationship becomes more and more casual. What usually happens is that shortly after the death of the headman and father, the patrilaterally-linked group takes exception to what the new headman does or says and moves off to found a village of its own. The case history I quoted earlier [1] brought this out clearly. The new headman had had intercourse with the wives of his 'son'. The son complained to the arbitrators in the dispute that 'he should have been as a father to me, and he is not'. The result was that the son refused compensation, and moved out of the village with his sisters to build on his own. When this happens the father-son relationship between the two villages is preserved and perpetuated, but the link is entirely formal and co-operation between them is limited to mutual attendance at funerals.

Patrilaterally-linked Groups as the Legacy of Slavery

Slave-groups in a village are usually linked patrilaterally to the dominant lineage. This is because the headman who was usually the captor of the slaves kept the women as concubines. They were given quasi-child status in the village, so that their children

[1] 'The Split of Cikumba Village', see Chap. V, p. 127.

•567 were called *yisikulu* (grandchildren) by the headman, who in turn
613 was called *ambuje* (grandparent or master) by the slaves. The
621 grandchild–grandparent relationship became fused with the
[608] master–slave relationship as the use of the term *ambuje* for master suggests. The slave descendants as a rule have no relatives in the neighbourhood. The Yao always redeemed uterine kin whom they found in slavery by replacing them with other slaves, usually taken or bought from the Nyanja, Ngoni or Bisa. Where there are slave-groups in a village to-day, they have frequently been bought or captured in distant places, so that their kinsmen have been unable to trace them. How much this

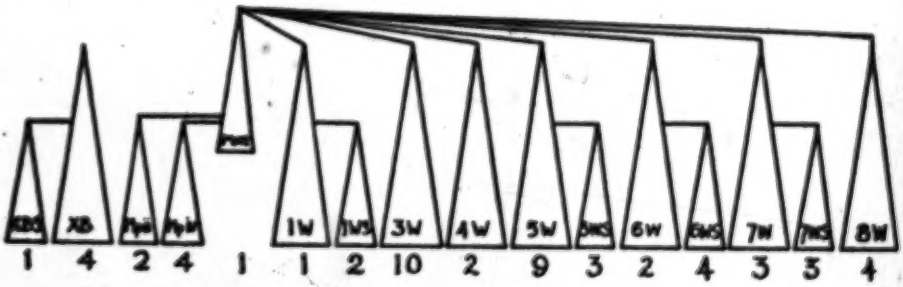

DIAGRAM 5. THE OWNERSHIP OF HUTS IN MPUMBE VILLAGE.

has prevented slave-groups from leaving Yao villages I cannot say. Certainly before the White conquest members of a slave-group could only leave their captor's village at the risk of death. But after the White conquest it seems that many of the slave-groups left to set up their own villages. Many, on the other hand, no doubt for personal reasons, stayed with their captors in their villages, and are there to-day. In Cikoja's village, for example, there are six of these groups. Some are not very large, but only 20 of the 46 huts are owned by members of the dominant matrilineage who are not married to descendants of slaves. Eight are owned by members of the dominant matrilineage who have married slave descendants, and the remainder, 18 huts, are owned by members of the slave-groups who have married outsiders. This is a typical distribution of hut ownership. At one extreme is the pure matrilineal village such as Ali Kasunka's and at the other is the village in which the dominant lineage is barely represented. A village of this type was Mpumbe

2: Mitchell E-5 (1946-1949) 1956 FT7 Yao FT7

when I visited it in 1947.[1] The basic structure of this village is set out in Diagram 5. Here the headman[2] was the last surviving member of the dominant matrilineage. The founder of the village, his mother's brother, had thirteen slave concubines. Some of these were barren but others produced children to give this complex structure. In this village the 55 huts were arranged in 16 different affiliations. The details are set out in Table XXIX. These groups were held together by Mpumbe IV, old, blind and doddering as he was. The virtual leader of the village was his elder brother's son, a man in his late forties or early fifties. When Mpumbe died, late in 1948, the people said that it was because of the sorcery of his brother's son who wished to take over the name of the village. This led to a dispute, which ended in the brother's son's leaving to found a new village about 15 miles away. A distant sister's son, as I have said, succeeded to the headmanship, and the reduced village was reunited under this new leader. 567 613 621

However, this is an extremely unusual type of village as most villages, if they are not simple matrilineal groups, have only one patrilaterally-linked group living with them. The reasons for this are firstly, that if patrilaterally-linked matrilineages develop at all in the modern villages, they move out very soon after the death of their progenitor, and, secondly, that there are very few of the old slave-raiders' villages left intact.

Cross-cousin and Other Kinds of Intra-village Marriages 582

A most important factor in the welding of patrilaterally-linked groups to the dominant matrilineage is marriage. The tradition of cross-cousin marriage is very strong among the Yao. A person may marry either type of cross-cousin but in practice preference is given to a father's sister's daughter—i.e. the woman is married to her mother's brother's son. There is a special term for cross-cousins, *asiwani*, which is used by either male or female talking to either sex. Between cross-cousins, especially cross-sexually, there is a joking-relationship which may vary all the way from ribald joking to sexual advances. Some of my male informants say that sexual intercourse may take place between cross-cousins 601 605

[1] See also Chap. VI, p. 161, and Chap. III, p. 59.

[2] He died late in 1948 and was succeeded by a distant 'sister's son' from the village of his perpetual son, Ngongondo.

[text continues on p. 199]

3: Stanmus D-5 (ca. 1912) 1922 FT7 Yao FT7

769 supposed to be the abode of spirits. Except in the case of chiefs, the Wayao never make any erections over their graves, like the Anyanja grass shelters, and the present-day Mohammedan earth imitations of Swahili tombs.

766 Chiefs, and the more important headmen, are usually buried in their own villages. Over the grave, a grass hut with a veranda is erected; the hut is covered with calico, and guns were formerly set in as veranda posts. Guns and ivory used to be buried with the corpse [567] but these Yao, I am told, never practised the barbarous custom of burying slaves with their chiefs. Information of the death of a chief was always conveyed to other chiefs by slaves who were kept by the recipient of the message.

Since the time of the old Malemya, the corpse of a chief always lies with its head in the direction of the old chief's grave. The grave is swept around, and the house pulled down as in the case of an ordinary man, but the grave-hut is rebuilt every year and never forgotten.

Since the burial of the dead is more or less correlated with the idea of planting seed from which progeny will spring, the natives will not bury a leper, believing that if they did so, leprosy would spring up all around them. Persons dying of an epidemic disease such as small-pox are dealt with in the same way. In these cases and in that of a man dying of ordeal poison, the body is enclosed in a mat and put up in a tree, a manner of disposing of the dead common among the Anguru and some Anyanja. Concerning death from dropsy, similar precautions are taken to those in the instance of a woman dying in childbirth,[1] and a tube is put down to the body from the surface of the ground.

A leper feeling that the end is near, will ask to be put in a hut built outside the limits of the burial ground. Here, provided with water and food for a few days, he will wait to die near the graveyard wherein he knows he cannot be buried.

Anyone who is wounded with a spear or any other weapon is not taken into the village, [752] but is kept in a hut in the bush. If death results, the mourning ceremonies differ somewhat from the ordinary rites and are much curtailed.

Initiation Ceremonies. Under this heading I propose to deal with the three ceremonies, *Lupanda*, *Chiputa* and *Litiwo*. They are occasions of great importance in the life of the native and their educative effect for the good of the tribe is far reaching. 881

At *Lupanda* (*Ndapula*) the young boys attend; at *Chiputa* the young girls go through their initiation and a side ceremony for young married men takes place, while *Litiwo* celebrates the first quickening with child. All the ceremonies are included in the word *Unyago*. Macdonald in *Africana* while referring to "the mysteries"[2] gives scant information about the ceremonies and has, presumably, without much knowledge of what goes on, condemned these customs like many others as furthering "absurd superstitions." He has failed to recognise that they are occasions when a large amount of useful advice is imparted, good manners are insisted on, and tribal custom is made known. Sexual questions are dealt with in these mysteries, and, though mixed up with a large amount of superstition, a

[1] Vide supra, p. 238. [2] Op. cit., vol. 2, ch. 7.

674 for witchcraft were carried out by strangling with a piece of calico at a place appointed for [696] the purpose some miles from the chief's village.

There was no case against a man who seduced an unbetrothed girl, the latter being [684] considered entirely at fault.

After divorce, the children always remained with the mother. The man left his wife [586] after the case, saying, "I will take my spear and some of the goats and chickens, but the children will always know their father."

Murder was a question of compensation to the deceased's relatives and was not pun- [682] ished by death.

Stealing was a serious offence but many who were found guilty were rather despised [685] than punished. The thief with the stolen goods tied about his body but otherwise stripped naked would be driven through the village and prodded with sticks to the sound of drums and hoots of derision. Most crimes, however, might be punished by exacting compensa- 681 tion. Pajitsent took the form of goods or slaves. In the case of murder, the accused might have to pay several slaves to the deceased's relatives, and in addition, a fine to the chief for spilling blood, consisting perhaps of one slave. The amount of compensation expected was mentioned by the plaintiff in the case. One of the expressions used was, "My compensation must cover an ant hill," meaning enough slaves, standing hand in hand, to surround an ant hill; ant hills in this country are sometimes very big. If a man had no slaves, he would send his relatives or he himself might be forced to become the slave of the plaintiff. There is a saying anent this practice: [539]

> *Chibandili wachimwile wachila wakwe!*
> The monkey they tied (with) tail his (own).

Slaves passed over to a man in payment for crime became free men; they were an ad- [567] dition to the village and might even be adopted in place of a murdered individual.

When compensation was made by the defendant to the plaintiff, the latter always returned some part of it as a sign that friendship was again established.

Goods or money received in compensation for murder, i.e. blood money, might not go for the purchase of food or clothing. Detection of a guilty party by means of magic and proof of guilt or otherwise by ordeal poison are dealt with elsewhere.

Bluffing anyone into giving something [illegible]thing, obtaining goods by false pretence, 674 was not considered a crime, as anyone was [illegible] game." For instance, a party of youths would waylay a man with a load of fish, saying they had been ordered by their headman to commandeer it. If the man parted with his fish, so much the worse for him; if he showed fight, he was respected and friendship made with a give-and-take of fish and snuff. Such bluffing is called *kulpa wawa*, "to eat with them." To add to their appearance of *bona fides*, the party might have secretly borrowed some well-known article belonging to their headman.

3: Stannus D-5 (ca. 1912) 1922 FT7 Yao FT7

567 **Slavery.** Slaves were acquired by capture or purchase, or were received as payment. Prisoners taken by the vassals of one chief in a fight with the partisans of another chief became slaves. Slave raids were also made by the Wayao upon the weaker Anyanja or again expeditions were sent out hundreds of miles away into the Chipeta country to buy slaves.

[422] Slaves were a man's goods and chattels, to do with mainly as he pleased, but no man might kill a slave without bringing the case before his chief and obtaining consent. While some were bought and sold and sometimes found their way into a slave caravan bound for the coast, many, perhaps the majority, lived the life of ordinary individuals in the villages. A man who was unhappy in a village and wished to escape from his vassaldom might run away to another village and there commit some act so that he might be claimed as a slave. The custom was to go to the village and sit by the site of a house which had been pulled down after the death of the occupant, and the saying is, "He has been called by the dead man's spirit."

[554] Many a slave has become an important man in the village and slaves were often the trusted advisers of their chiefs, but there was no means of becoming a freeman. Neither a slave himself nor a second party could purchase his freedom. A slave capturing another man in warfare, for instance, could not ask for his own freedom in exchange for his captive, but anyone so taken became, in a way, the slave of a slave, and the master could not sell the second slave without the permission of the slave captor. An old slave might often be allowed to do just as he pleased and to all intents and purposes was a free man, but he was never actually freed. A slave might earn a return for work done for others than his master; part of this he would probably give to his master, but there was no regular tax upon such earnings.

The idea in accumulating slaves seems to have been to increase the population of the villages and hence their power and progeny. This is borne out by the fact that marriage [582] between free men and slaves was allowed. Marriage between a free man and a slave woman was unaccompanied by any ceremony and was therefore rather in the nature of recognised concubinage. Such a wife, if unsatisfactory, could be sold out of the village, but generally she was well treated. The children of two slaves were of course born into slavery; the children of a slave woman by a freeman husband, were not quite emancipated, as the father could not remove the child from the village of the slave mother's master, and in very extreme cases, it might be sold by him.

Women might marry slave husbands and often a master married his daughters to his slave men whom he thought well of. This amounted to a guarantee to the slave that he [421] would never be parted with. A woman with a slave husband could not leave him informally; she could not sell him, inasmuch as women have no property.

643 423 **Land Ownership.** The ownership of all land was vested in the chief, but he appeared to hold it in surety for all the people over which he ruled. Headmen had no land rights.

5: Mitchell E-5 (1946-1948) 1949 FT7 Yao FT7

000

authorities to-day: those of the British administration. Yet the headman is a key official, if usually unpaid, in that administration. For example, he has to report suspicious deaths and illnesses and strangers, and he has to see that his villagers keep the village clean, hoe paths, use latrines, follow agricultural and veterinary regulations, pay tax, &c. He is no more ready than they are to accept these as good, but he tries to enforce the rules for he is liable to be punished if he does not, by fining, imprisonment, and ultimately deposition. As he applies these unwelcome and unaccepted rules, his position becomes subject to still greater strains.

II. THE YAO OF SOUTHERN NYASALAND

J. C. MITCHELL

567
554

THE Yao people were notorious at the end of last century because of their reputation as slavers. Livingstone had noted their close association with the Arabs in this trade and much of the effort of the early administrators of Nyasaland was directed to suppressing the slaving activities of the Yao. While the slave trade has been fairly well studied, the associated but different phenomenon of domestic slavery has not been nearly so thoroughly investigated. It seems that domestic slavery was an important part of the Yao social structure in those days, before the coming of the white man abolished at one stroke this and many other social institutions. But, though the institution of domestic slavery ceased to exist, the system of values upon which it was built still survives and still affects the social structure of the modern Yao. We might summarize this system of values by saying that the status of a man depends on the number of people over whom he exercises certain rights and for whom, in turn, he is responsible. In the past, a man could increase his status in the community by acquiring slaves. This he did by buying them with calico obtained through the slave trade, or with ivory, beeswax, tobacco, and other natural products; by taking them in compensation for the death of a relative; or simply by kidnapping them. Slaves were often taken as spouses by the members of the group over which the man exercised his command, or by the man himself as wives, and thus the group was further enlarged by natural increase. Though these slaves and slave-children had fairly well-defined rights, they were not free to leave the command of their owner, and the group was from that point of view a stable one. The leader's command over his matrilineal and other relatives, however, was not so absolute and it is with this aspect of the social structure that I am here concerned. This system of values still persists and forms the basis for evaluating the status of men in the Yao community. The high status of a village headman is usually expressed in such terms as: 'He is a big man—he has many people', or 'he has many huts'. The village headman himself and the men under him are motivated by the same system of values so that in any village at any time there is a balance between the desire of certain members of that village to break away and establish units with their own dependants, and the desire of the headman to retain those people under his charge.

[622]

622
554
578

The tensions that exist in this situation are well recognised by the Yao and they always express them explicitly during the ceremonial succession to village headman-

CHAPTER VI

THE LINEAGE FRAMEWORK OF VILLAGES

Matrilineal Kinship

TO outsiders a village appears to be an undifferentiated whole and in interaction with other villages it acts as such. But within the village, social actions are determined by membership of kinship groups whose genealogical relationships to each other differ from one village to another. The village headman who represents the unity of the village is usually a kinsman of all the villagers, but the links to him are different and diverse. Yet he commands the leadership of the village, not so much by his kinship to the villagers, for a villager may have other mother's brothers and fathers in the village, but by his position in a political structure, where he represents the village to outsiders and to external authority. 621 622 571

Yao social groups are organized on a principle of matrilineal descent but we shall see that, although this is the main principle, it is modified by the general political mould into which villages are forced. We have already seen that, at least in the lines of important headmen, clan-names are inherited from the mother.[1] This is the simplest and most direct way in which matrilineal descent affects social relationships. The principle of matrilineal descent is far more important in organizing the smallest group which acts corporately within the village—the matrilineage. 611

A significant feature of Yao social structure is that the village organization tends to cut across lineages. In the process of segmentation of matrilineages, which I shall discuss in detail later, new villages are formed. When this happens the dissident kin usually set up their homesteads a good distance from the original or parent village. The links between different sections of the same matrilineage, therefore, tend to become lost, and the new village, conscious of its own identity and unity, gradually loses its links with the parent village. The general structural relationship between the villages as wholes, and their headmen as their representatives, is fixed at the time when the division takes place, and this is remembered. But the actual genealogical 621 613

[1] See Chap. III, p. 71.

2: Mitchell E-5 (1946-1949) 1956 FT7 Yao FT7

Other Types of Village Structure

621 Linked groups in most villages are connected by patrilateral
571 ties, but other kinsmen, or even unrelated persons, are also found in villages. I have been describing essentially the organization of groups. Some kinsmen do in fact come to live in villages because of personal links to the headman or some other villager. If a man or woman does this, he or she usually has a single hut which is placed close to his or her kinsman. If the person lives in the village long enough a related group may grow up around him or her, and when the children reach adulthood this group will become internally organized and corporate in its dealings with the other groups in the village. But this seldom happens, because the ties to the resident kinsman are usually too weak to hold the children, or the causes which drove the founder of the new group out of his or her original village have disappeared. Children may leave a village with their mother because she was accused of being a sorceress, and go to live in the village where her brother is married. When she dies, or the incident is forgotten, they may go back to their matrilineal village. For example, Bt. Mkwanda of Cikoja village ran away with her husband after her child was supposed to have been bewitched by her mother. But her children, as they grew up, came back to marry in the village of origin, or at least to contract marriages near it. In Chiwalo's, Nyambi's and Kawinga's areas, where I have recorded most genealogies of villages, I found few people who were neither matrilineal- nor patrilaterally-linked relatives. In Malemia area, which is nearer Zomba, the situation was
621 somewhat different. The dominant matrilineage- and patrilater-
571 ally-linked groups of the typical Yao village were still quite easily
361 discernible. But there were other related and unrelated groups and huts in the villages. An example of this is Citenjele village,[1] on the north boundary of Malemia's area. There the main village contained the following huts:

Dominant matrilineage	22
Groups linked through present headman	5
Hut linked through present headman's brother	1
Groups linked through previous headman	5
Groups linked through previous headman's brother	4
	37 huts

[1] See also 'An Outline of the Social Structure of Malemia Area', 36–40.

2: Mitchell E-5 (1946-1949) 1956 FT7 Yao FT7

About 250 yards to the north-west is a single hut belonging to the sister of the husband of one of the present headman's daughters. In the middle of the group on the road is a single hut of a woman who has no connections in the village at all. Her husband works in a mission garden about a mile away. About 100 yards from the north-east edge of the main block is a group of 4 huts which are unrelated to Citenjele, but which had joined him about 25 years ago before he had moved into Malemia area. About 250 yards farther to the north-east there are 2 huts owned by the daughters of the sister of the wife of a man who had married one of the female members of the dominant matrilineage. Due east about half a mile away, there is a group of 6 huts which are owned by Yao. These are unrelated groups and are under Citenjele as Administrative Village Headman, but they are for all intents and purposes separate villages.

There are other types of villages. For example, in Namwera area I found a village composed of a number of unrelated sections. The huts of each could quite easily be distinguished from those of other sections though they were built very close to each other in some parts of the village. Each section was built up on exactly the same pattern as other Yao villages—that is, there was a dominant matrilineage and sometimes some patrilaterally-linked huts. Each section had its own leader who concerned himself with its internal affairs. He, nevertheless, recognized the authority in general of a village headman, who lived in one of the sections of the village. He was the Administrative Headman for the village and he was the first to come into the area. All the other sections had had to ask him for land when they had moved into the area. His authority was confined to his duties as Administrative Headman though he was much respected and the sections called him in regularly as an arbitrator in their affairs. But if the chief called all village headmen to the court, the leaders of the various sections were as well, so that he was not in fact their representative to outside authority in all situations. The relationships between the various sections, therefore, were very much like those between village headmen in Kawinga's area. The only difference seemed to be the amount of physical concentration of the huts.

I tried to find out why these sections lived so close to one another. My informants told me that there were many men away at labour centres and it was necessary to build the huts

2: Mitchell E-5 (1946-1949) 1956 FT7 Yao FT7

621
•571
341

close together so that the few men left in the village could protect the village against man-eating lions. This is certainly an area where man-eating lions are common and kill people every year. It is true also that man-eating lions have ceased their depredations in Kawinga and Nyambi areas. But I also found a similar type of village in Malemia area.[1] Here the explanation was that the villages had been made to live together by the Administration under the 1912 Ordinance. But the Ordinance was applied to the whole district, yet there are not many of these villages.

The relationships between the section leaders and the village headman are exactly the same as those between independent headmen farther south. The difference in the villages is the degree of physical concentration of the huts; which brings up for review the concept of 'the village'. I have defined the village as a discrete cluster of huts occupied by a group of kinsmen[2] and hinted that the huts were not always clearly separated from neighbouring huts. In fact the Yao word for village, *msuo*, may be applied to social groups of different orders. I have already mentioned that different sections of a village may be scattered in discrete groups. The term *kamsuo* (diminutive) or even *msuo* may be applied to any of these clusters of huts in a situation where the larger kinship section is not involved. A man may tell his friend that he has bought some maize at Meni's village. He means that he bought the maize at the group of huts under Meni in Majaja village. In a court case, however, he would say that he had married a woman in Majaja village even though he were referring to the daughter of Meni.

621
571

The expanded village—*i.e.* the groups of kinsmen who recognize the leadership of one man, but whose huts are relatively distantly spaced in discrete clusters—may give a stamp to the social organization in a small area of, say, a square mile or two. The dominant matrilineage of the senior headman and his patrilaterally-linked groups may all live in this area in physically separate groups, but their kinship is still dominant and they are for ritual purposes still 'of one fire'. In time any of these groups may move off and be replaced by complete strangers. The senior headman still retains his position of authority over the

[1] Ngalanga village. It is described in 'An Outline of the Social Structure of Malemia Area', 33-6.

[2] Chap. I, p. 2, and Chap. V, p. 110 f.

2: Mitchell E-5 (1946-1949) 1956 FT7 Yao FT7

strangers. Meantime, the seceding group moves into some other village area at a distant place, where they are strangers themselves. The result is that kinship soon ceases to be the organizing principle in local areas, and the principle of primacy takes its place. Hence, primary[1] kinship provides the principle on which the relationships among village headmen, and therefore villages, may be organized in a local area, for only a relatively short time. Before long, for a variety of reasons, the smaller villages move away and their sites are taken by others. 621 571

Primary matrilineal kinship on the other hand retains its significance as the means whereby relationships are organized within villages. In other words, outside the lineages of the ruling families it is very difficult to record a genealogy which does more than link the component parts of a village. Beyond this genealogies are socially insignificant. Therefore, since villages are continually breaking up, genealogies are usually shallow. Once a group has broken away to found a new village, its exact genealogical link with the parent village tends to be forgotten and replaced by a formalized link of perpetual kinship between the two village headmen.

Yao society, therefore, is not 'organic' in the way that Fortes describes Tallensi society: it is not 'governed by the same principles at all levels and in every sector of the social structure'.[2] Instead different principles of organization apply at different levels of Yao society. Thus the shallow lineages that form the cores of villages are internally segmented. Villages are composed of matrilineages linked to each other usually through patrilateral ties, ties which are initially primary but become perpetual. Chiefdoms, on the other hand, may be seen as organizations of villages ranked in relation to each other and to the chief in terms of their perpetual kinship links, their antecedents, and their strength of following. 621 571 613 [631]

The same groups of matrilineal kinsmen may interact in three different fields of social relationships. Firstly, they may form a segment within a matrilineage. Secondly, they may form a group in a village linked initially by a primary and later by a perpetual patrilateral tie to the headman. Thirdly, if they

[1] i.e. kinship that can actually be traced as against 'putative' or 'perpetual' kinship.

[2] Fortes, *The Web of Kinship*, 241.

2: Mitchell E-5 (1946-1949) 1956 FT7 Yao FT7

621 should break away to found a new village they may become a
571 Newcomer and relatively junior hamlet in political relationships with other villages in a local area of a chiefdom.
613 The group of kinsmen in each situation exhibits different degrees of corporate identity. As part of a lineage the identity of the group, except in unusual circumstances, is merged in the identity of the lineage. As part of a village the identity of the group appears clearly enough in intra-village affairs, but is merged in the identity of the village otherwise. It is only when the group can set up as a village of its own that its identity is finally established, that is, when the group becomes fully autonomous.

The identity of a group of matrilineal kinsmen therefore varies with the extent to which matrilineal ties with other kinsmen are attenuated. They can emphasize their independence of their kinsmen by playing down the link between them. A linked lineage in a village emphasizes its *patrilateral* link with the dominant lineage and so maintains its identity within its village of residence. The members do not consider themselves a part of a matrilineage which is dominant in some other village. By the same process a newly-founded hamlet does not emphasize its detailed and intimate links with its parent village, but tends to subsume these into a formal, perpetual relationship between the respective village headmen.

In Yao society, therefore, we may distinguish three orders or levels of social grouping:

1. The matrilineage which consists of ranked lineage segments.
2. The village which consists of ranked matrilineages.
3. The chiefdom which consists of ranked villages.

It is only at the most fundamental of these levels, i.e. within the matrilineage, that matrilineal descent provides a principle for organizing group relations. At the next level, i.e. within the village, matrilineal kinship gives way to other types of primary kinship between key personalities in the structure. At the third level, i.e. within the chiefdom, kinship appears only in the form of the highly formalized 'perpetual' kinship—the actual links may well have been forgotten long ago. The same kinship term may be applied between personalities at all three levels of organization, but the content of the term changes according to the field of interaction.

2: Mitchell E-5 (1946-1949) 1956 FT7 Yao FT7

The Rôle of the Chief in Headman's Installation Ceremonies

The second significant aspect is the importance of the chief in the installation ceremony. In each ceremony the chief has to give his formal consent to the succession. Note that the chief is approached by one of the headman's relatives, so that at this level, in spite of Kawinga's statement,[1] the succession dispute is over and the heir is decided upon. The chief's formal consent, his formal fixing of the date of installation, his personal appearance or the appearance of his representative, and his giving of the gift, all serve to set his official seal on the installation and to recognize its political significance.

The chief recognizes the leader of the group, both in his actions and his words. He also sees in the headman his representative, as when Nyambi said, 'When you disobey the headman you disobey me,' or when Kawinga said, 'Nyenje, you are responsible to report to me any unusual thing which occurs in your village here.'

When a chief comes into a village it is the village headman who entertains him. I was told that if the headman or his representative were away, the chief would be given no hospitality at all, because the villagers only entertain him through their representative, the village headman. Though the chief himself may not frequently visit villages, his representatives are constantly coming and going on his errands. Where affairs of day-to-day administration of the chiefdom are concerned these representatives are usually the court messengers, who may be paid from Native Authority funds or from the chief's private funds. The chief's representative in his tribal capacity, however, is usually his *nduna*, but it may be practically any village headman whom the chief selects. For example, he may send his *nduna* or one of his satellites as his representative to a *mapeto*.[2] He sometimes sends his representative as a referee to divinations and to chicken poison-ordeals following accusations

[1] Kawinga had a say in Nyenje's succession because he was a clan-relative. I have evidence that some lobbying had been going on because the successor that Kawinga chose was not chosen by Kawinga's relatives.

[2] A meeting held shortly after a funeral to decide whether death has been caused by sorcery or is due to natural causes.

11: Sanderson D-5 (ca. 1920) 1920 FT7 Yao FT7

The alternative term, *wese*, common to nearly all Bantu languages, is usually reserved for "own father," but not always. 601

Latterly, though the relationship is really *akwego*, the husbands of a man's "daughters" or "grand-daughters" are called *atati*—in a complimentary sense, not of course in defining relationship.

The word *akwego* is rapidly falling into desuetude for men, and is, nowadays, never used in speaking to a man of that relationship, though used freely as a mode of address to women.

Amao (or *achikulu-wangu*, *-wao*, etc., "my, his mother") may be further defined as "great" or "little" in the same manner as *atati*.

The parents of any *atati* or *amao*, and those of one's wife are called *ambuje* ("grandparent"). Great-grandparents are specified as "father" or "mother of my grandfather (or mother)."

The founder of a family is called *Likolo*, especially in prayer—except for the augmentative prefix obviously the same word as *Nangolo*, "a parent," which includes all "fathers" and "mothers." [182]

It is curious in this connection that a name for little girls in general, if one does not know their real name, is *chikolo*. All these words seem to be derived from *-kola* ("have," "possess"), and refer, probably, either to actual or potential possession of offspring.

Achinangolo are distinguished as "male" or "female" according as they belong to the father's or mother's side—irrespective of their own sex.

Conclusions.—The Yao nomenclature of relationships, bearing as it does the evidence of former group marriages, is, like other classificatory systems, gradually changing in conformity with the development of the race, so that it can be used to express consanguinity; Rivers has, I believe, called attention to this process. 601 198 [121]

The Yao custom—now dying out—of lending one's wife to a visitor (usually a close friend) may be a remnant of ideas carried on from communal marriage, though such a privilege is never given to a relative. [835] [594]

In the same way a man who has had no children (a great stigma) may request his friend to help him—he will never ask a relative—and all of the three parties will keep the secret of the true paternity of any children resulting. [835] [594]

In many tribes the marriage of brother and sister, or a man with his sister's child, is permitted to compensate for the law by which a man's property goes to the son of a stranger, but nothing of the kind is allowed among the Yaos. Indeed, they view any incestuous union with particular horror, and such must be very rare. I have heard of a case of a man committing incest with the idea that he would thereby become endued with supernatural power, but all he gained was ostracism; in the old days he would have been burned. 588 835 [231]

3:Stanna D-5 (ca. 1912) 1922 FT7 Yao FT7

754 Resident Magistrate at Blantyre, told me of a case where the grave of a well-known European hunter was opened and his trigger finger removed, the reason being obvious. The
[266] same thing is said to have occurred in regard to the heart of a brave man. In the former case the finger was probably worn as a charm; in the latter, the heart partly eaten and partly made into medicine. I have found human fingers and skulls among the outfits of witch-doctors. Such practices seem akin to those of cannibalistic societies found in other parts of Africa.

754 The natives insist that *wasusi* are banded together in some sort of society. There are
266 numerous discrepancies in the evidence brought forward about *wasusi*, but such would necessarily arise and they do not, therefore, disprove the general belief in the actuality of
● [575] *wasusi*. Be that as it may, it seems probable that though there may be little or no cannibalism at the present day, the beliefs about *wasusi* have arisen in consequence of common
266 cannibalistic practices in the past. There are individual cases of cannibalism well known and one has only to call to mind that of Kantukule of Malenya's village. This man more or less openly killed and ate a number of people. On one occasion after a fight, he was seen looking over the dead bodies of the slain foes and in answer to an enquiry, he denied that he wanted any spoils but said he was just marking the bodies, "that would be his share." Later on, his own son, who tells the story, brought an Angoni man into the village who wished to settle under Malenya. It was evening, so he was introduced into his father's (Kantukule's) house where Kantukule gave him food and later a mat on which to sleep, the son meanwhile having gone to a beer drinking. In the morning, he returned to take his Angoni friend to the chief, but his father said he had gone away. Entering the hut, however, the son came upon the Angoni's snuff-box, and said to his father, "No Angoni would go away and leave his snuff-box." But the father said, "Well, he has gone." The lad being suspicious again went into the hut and found the place where the Angoni had been sleeping drenched with blood. Going out again, he noticed blood dripping through the bottom of Kantukule's grain-store and looking inside, he found the body.

This man Kantukule was a great friend of the reigning Malenya's headwife, Kang'ando; after the death of Malenya and after his wives had passed to the present Malenya, circumstances arose in the village which cast suspicion on Kantukule and the woman. One of two brothers was ill and, it appeared afterwards, that the woman had said to Kantukule, "Won't you finish him off?" It is supposed that Kantukule thought she meant the brother who was not sick; for it so happened that both died the same night. It was supposed they were killed in order that Kantukule and the woman, his friend, might eat them. Malenya had the woman turned out of the village. She now lives near Zomba and has once come under my own. The man, who was also turned out, took up his abode near a highway where he is reported to have killed several Angoni porters whom he said he preferred, because "being travellers far away from their homes, no one would bother about them."

3:Stanmus D-5 (ca. 1912) 1922 FT7 Yao FT7

The father of one of my servants helped to clear out the remains of a body from his grain store on one occasion and shortly afterwards, it is supposed that his own sons who had said they could not allow it to go on any longer, employed some one to kill him, as he was found, one day, with his head smashed in. There are, I believe, a number of similar cases known. 266

A person is supposed to gain the powers of *wanwi* by procuring medicine from some one willing to sell his secrets at a price, and by performing certain rites usually connected with his method of bathing. It is said that "such and such a one takes his bath on the top of an ant hill" or "on the roof of his house by moonlight." The usual initiation into *wanwi* is a long business, the individual being successively initiated into all the various practices of *ukwa*, the supernatural. Medicines are made from a still-born child, from various plants, from the hyaena, etc., and used for preparing the individual in the new science. He is introduced to the hyaena, the fox, etc. It is also asserted that a man may acquire supernatural powers by having sexual intercourse with a near relative, a sister or mother. I have had pointed out to me an old man who is said to have wished thus to acquire power but the woman refused and he has been a laughing-stock ever since. 754 576 [835]

On one occasion, a man related to me the pathetic life story of his attempt to find his favorite sister who, like himself, had been taken away to the coast as a slave. In desperation he has adopted the above procedure to try to gain supernatural powers to help him but without result. It would therefore seem to be a method not particularly associated with *wanwi*.

The *wanwi* is supposed to bring about the death of his victim not by administering poison or other such direct means, but by the more subtle mode of making medicine "against" him. When the victim has succumbed and is in due course buried, the *wanwi* arrives at the grave to secure that for which he has been working. To the *wanwi* is attributed the power of making himself invisible, and of taking the form of an animal; owing to the carrion-eating habits of the hyaena, *this animal forms the wanwi commonly taken.* Other animal forms which are associated with the *wanwi* are the leopard, the fox, and the owl, all night-going animals. The Yao say, "The cry of the fox (jackal) is heard at night because he associates with *wanwi* doings." 754 [835]

Arrived at the grave after sunset, the *wanwi* blows his horn, the horn of a small antelope, to call his brethren; a fire with a blue flame is made by the grave and around it they dance, or the grave may be illuminated by blue flames without a visible fire. The *wanwi* calls upon the deceased to rise from the grave, addressing him by the name he bore before he was initiated, i.e. his child-name. Obeying the summons, the dead man rises to the surface of the ground, though how he comes out is not quite clear — " the hole may be over so small." The risen dead is then killed again by magic medicine and his body divided to be eaten by the congregation of *wanwi*. It is said that the skull is made into a gourd, the eyes are used as beads, and the ribs formed into a girdle. 754

2: Mitchell E-5 (1946-1949) 1956 FT7 Yao FT7

 622

compounds, especially in areas where there are man-eating lions,[1] 554
so that it is no longer an infallible indicator of the hut-owner's 351
rank.

Minor village headmen always allow their superiors to sit on 622
a chair. If village headmen of commensurate status are present, 554
chairs may be sought for them all. But a minor village headman 576
never occupies a chair, even if one is available, in the presence of his superior. At a meeting, for example, a chief occupies a chair and so may his most important *nduna* or councillor. The more important headmen sit alone on separate mats, for a man only shares a mat with his equals, and then only rarely. Junior headmen, however many there are, have to try to squeeze themselves on to one mat or squat on the ground.

Important headmen also have the right of walking in front of their juniors. If there are three or four headmen returning from, say, a court case, they arrange themselves in the pathway in an order which reflects their rank. As they file down the narrow field paths the leader is the most senior among the group. After him come the other headmen and last of all the commoners. This order of precedence is also followed when initiands pass through the tribal initiation ceremonies. The sisters' sons and other matrilineal descendants of important headmen precede those of the less important headmen. At Chiwalo's hut also, I [695] have noticed that the more important headmen sit under the verandah while listening to private cases. The less important headmen sit with the commoners under a shelter or out in the sun.

I have been discussing the visible marks of prestige. But high 622
rank also tends to carry with it some other privileges which are 554
not immediately observable. The most obvious is Government 648
recognition. I have already mentioned that under the 1912 Ordinance, village headmen were recognized by the Administration. These Administrative village headmen, who had certain duties to perform, were paid a small annuity and were in earlier days given a 'book' in which the tax payments could be recorded. To-day, the Yao still describe Government recognition as 'having a book'. Administrative village headmen derived more benefit from Government recognition than merely an

[1] The huts in Plate IX (*a*) and (*b*) are in Nanwera area where there are man-eating lions. Most huts have compounds. A large proportion of huts in areas where there are no lions also have compounds.

2: Mitchell E-5 (1946-1949) 1956 FT7 Yao FT7

is most powerful, there is a tendency for the Islamic initiation ceremony for boys, *Jandu*, and the Islamic initiation ceremony for girls, *nsondo*, to displace the tribal equivalents, *lupanda* and *ciputu*. These Moslem initiations are conducted by Moslem teachers (*muvalimu*) and are not controlled by the chief. Though it also involves the circumcision of the boys, *Jandu* is very much shorter and the boys are secluded for only a week. Some say it is becoming more popular because it is less expensive for the boys' parents. In Chiwalo's area the two ceremonies are run concurrently. The boys and girls go through the normal segregation rites at the beginning of the ceremony, but an *muvalimu* circumcises the boys according to Islamic practice. At the aggregation rites at the end of the period of seclusion, the star and crescent appears as one of the symbols along with the whale (*namunguni*), antelope (*mbalapi*), leopard (*cinswi*), and the other tribal effigies which are shown to the boys. Christianity in the south has had a similar effect. The Missions actively discouraged initiation ceremonies in the past. Many of the people in Mposa's and Malemia's area have dropped the custom, or have integrated prayers and other parts of Christian ritual into the ceremonies, though circumcision is steadfastly retained. The effect of these changes is that the important ritual control the chief had over the ceremony has been undermined, and so the prestige attached to it has also begun to fade in these areas. What I describe about the prestige of village headmen and the rights they have to initiation ceremonies is only partially true, and is falling away daily. The correlation I seek to establish is also disturbed by the fact that among the Nguru there is a slightly different initiation ceremony (*cidedeto*) for boys. Most Nguru send their boys to the Yao initiations but there are still some who hold their own traditional ceremonies. These are not within the mystical control of the chief so that some Nguru headmen are outside the competition for the initiation rights. I should say, however, that most compete with the Yao for Yao initiation rights so that this factor is not as disturbing as appears at first sight. In addition, village headmen who move into a new area usually must obtain the permission of the chief before they may use the initiation rights they held before coming into the area.

There are other indicators of the general high rank of village headmen. Junior headmen, like commoners, must give a special

2: Mitchell E-5 (1946-1949) 1956 FT7 Yao FT7

Arabic greeting to their seniors. This is done by placing the left hand on the chest and bending slightly forward to the village headman, saying, '*Subaye*'. The senior should then respond, '*Alaye*'. Also, important headmen are usually buried in the centre of the village, not in the common graveyard. The tomb of an important headman or personage, usually built of stones, concrete or brick, is called *nsati*. The right to bury in the village must be obtained from the chief 'because the land is his', and in Kawinga's area a fee of 6*s*. must be paid to him.

The Struggle for Government Recognition

Thus far, I have been discussing the ways in which the rank of village headmen may be expressed. I now describe the way in which these marks of prestige are associated in the three categories of headmen we have distinguished, and in what way the competition between them is phrased. I have already described how all the chiefs in the areas to which I am referring are all successors of the original leaders of the invasions, and are usually the present Government representatives or Native Authorities.

The people must recognize the rank of chief because mystical beliefs prescribe activities in one direction, and because the limiting structure of the White Administration does so in another. A village headman cannot hold initiation ceremonies without the permission of the chief because of the mystical sanction, but the chief also has legal authority over his subject headmen. He as Native Authority is recognized by the Government and is its representative to his people. The Native Authority Ordinance (1933) specifically imposes penalties on those who do not recognize the authority of the chief. Under Section 12 of the Ordinance, the Native Authority may arrest without warrant any person who is accused of failing to obey his order or direction, interferes with his lawful duties, professes to be a chief or assumes the duties of a chief without Government approval. Under Section 13(*f*) severe penalties are imposed on any person who conspires against or in any way attempts to undermine the lawful power and authority of any chief or Native Authority. His position is therefore greatly strengthened against the village headmen and I have been told of one or two prosecutions by chiefs under this section. Nowadays, the mere threat of

2: Mitchell E-5 (1946-1949) 1956 FT7 Yao FT7

councillors. Long ago they held a most important position within the chiefdom. They were the loyal headmen and intimates of the chief, who could therefore be entrusted with the government of outer areas. They were posted to various parts of the chiefdom; kept the chief advised of war and attacks; maintained the peace among the village headmen in their areas; and collected the ivory to which the chief was entitled and sent it to him. Nowadays, the *nduna*s find themselves in competition with other officials who have arisen from the White Administrative system. The chief also finds advisers and councillors in his court clerks and his court sergeants, but the *nduna*s still have much prestige and advise and assist the chief in his administration of the area. Earlier, I mentioned that a senior headman was allowed to have a mat to himself, and only his own friends and people of his rank could occupy it with him. The only people in the chiefdom who could share the chief's mat, were the *nduna*s, and they called him *anganga* (my friend). Because the *nduna*s were not related to the chief they were in the peculiar position of being able to settle quarrels between the chief and his family: they were the arbitrators in arguments between the chief and his 'younger brothers' (junior male matrilineal relatives), or the chief and his wives. By Yao custom, rank is inherited by a village headman's successor, so that the relationship between the chief and his *nduna*s is perpetuated through successive incumbents. In Kawinga's area, for example, the *nduna*s to-day have the same name and the same relationship and relative position with regard to the chief as the *nduna*s who invaded the country nearly 100 years ago. This traditional ranking of village headmen emerges as soon as the Government alters its policy. Recently, when the idea of group headmen was reintroduced, the chief nominated the *nduna*s to become group headmen—a position not unlike that they held before the White conquest.

There is considerable difference between the size of Administrative villages under those headmen who have the right to wear the scarlet headband and those who have not. Table XV shows this clearly. The mean number of tax-payers under the former headmen is 80, while under the latter it is only 38. Among the village headmen with the right to wear the scarlet headband 62·5 per cent had villages of more than 60 tax-payers, while among other headmen only 25·0 per cent of the villages were in

3:Stanton D-5 (ca. 1912) 1922 F77 Yao F77

[88] While the wali then march solemnly along shaking their wands, the assistants begin singing:

"Ee ulenge ualeiwe!"
"To the gate they have shut!"

[53] [54] to which the wali reply:

"Ewewe kwakupita!"
"There is no place where to pass!"

The w'waichile remains at *Lupanda* till everyone else has left; he then sets fire to the shelters and leaving without looking back, runs to overtake the procession and then leads it on towards the village still at a slow pace, while all around is a yelling crowd of delighted mothers and other relatives and the assistants and drummers, all singing and shouting.

When the outskirts of the village are reached, the w'waichile halts and waits for the *chief* to come out and give them permission to enter. The *chief* brings calico which unrolled on the ground measures the length of the procession of wali. Headed now by their leader, the wali walk over this calico, while the assistants roll it up behind them for the w'waichile, as it is part of his payment. Flour may be brought him at the same time, carried by the chief's wives.

At an *Unyago* I witnessed at Kwimwawa's, the halt was called on the bank of a stream at the edge of the village where a bamboo arch had been erected. The arrival of Chief Malunya at this point with calico and flour was the sign for a demonstration by his young men who ran forward as if in battle, firing off blank rounds from old Tower muskets and executing a kind of war dance.

After the calico has been handed over, the *chief* returns to his kraal and the procession continues into the village, across the village open space to the fence round the chief's house. There, the wali enter by a gateway and disperse over the courtyard where they find [77] *their sleeping-mats laid out ready for them by their mothers.* The w'waichile lays his "tail" on the leader's mat to bring good luck thereafterth. With Mlanala, there is no further part for the wali, but in some cases they are called upon by the *chief* to give an exhibition of their dancing and drumming. The wali sleep that night in the kraal and disperse the following day.

In the morning, the w'waichile takes his "tail" and a stirring stick made from a millet stalk with the roots on it, and strikes the ground at points in a row in front of the chief's [77] house. Here the pots of beer which have been prepared are placed in rows, those chosen by the *chief* and those chosen by the w'waichile, and drinking commences. The w'waichile, before he joins in, takes the wali to an ash-heap in the village and there sprinkles them with medicine from a grain-mortar after which they go with their elements behind a house and [57] change into new clothes. They then go and salute the *chief* by clapping their hands and depart to their villages, duly initiated and somewhat subdued by what they have been through. [58] Their new names or "nam," may be given them by the elements either at *Lupanda* or after the return to the village.

3:Stannus D-5 (ca. 1912) 1922 FT7 Yao FT7

539

40. *Gwaru kwale ndakwale!*
Lying on the rock, heat!

This is a slang expression which in full would read, "It is nice and warm lying on a rock in the sun, but it is not so comfortable as being in bed in company with your wife; you can go on waiting but you won't get anything." This might even be said to a dog, watching as a dog will, every morsel of food lifted to its master's mouth.

41. *Kulupilila mani pa nkina!*
To have hopes of water for maggots!

It is a custom before lying down to sleep on the floor mat, to take it up and pour boiling water on the earth floor to kill any blood-sucking maggots (Congo floor-maggot, *Anchoromyia*). If you see a pot cooking on the fire, you naturally think there is food being prepared but you may be disappointed; it may only be the pot for heating the water to kill the maggots. The saying is thus used to a man who has made an assignation and is disappointed but goes on waiting. [513] [751]

42. *Kulumu upwi!*
To bite cockroach-like!

The cockroach is described by natives as going up to what it will eat, remaining quiet for some moments, and then suddenly taking a bite. This is said of a man who comes up to you smiling and then hits you a hard blow. [825]

Among the Yao as among other tribes that I have previously mentioned,[1] signs of salutation to a superior are made by clapping the hands or patting the breast or buttock with one hand, at the same time crouching down. A woman will go off the path and kneel, looking away from a superior passing along the roadway. 576

A person going by the door of a hut where others are sitting, will say "*Kwalanga hano!* At the door here." Passing behind anyone, he will say "*Ku-ngwa 'nsu!* At the back!" Meeting anyone on a path, a man will simply say, "*Ishe*, here," adding perhaps, "*Ku-shale!* all is well!" A chief or headman on returning to his village after a journey, is greeted by the women with trilling of the tongue (*Ku-lulula*). [201]

Man and wife do not greet each other in the morning. The wife rises first and draws water and places it in the hut for the husband's use but nothing may be said.

When a visitor is entertained and a chicken cooked for a repast, the "pope's nose" is always for the visitor. The right hand only is used in dipping into the common pot. A man of small importance, though replete, will go on making pretence of eating at a common meal by taking very small amounts so that his superior shall finish first, and rise and go away before him.

I may here add the words used by the Yao for the sounds made by various animals; they are interesting to compare with those of other languages: 112

[1] 'Notes on some tribes of British Central Africa,' op. cit., p. 200-208.

4:Stannus D-5 (ca. 1909) 1910 FT7 Yao FT7 Marovi FR4

case *mwavi* might be administered; if adjudged guilty the accused would be burned on a pile of wood. M 695

Evidence is given without taking any oath; a false witness is not punished. M 696

Justice is occasionally summary. At Mponda's, after conviction of adultery with one of the chief's wives, a man's throat was cut on the spot. Drowning was the usual punishment with Mponda.

Punishments for all offences practically meant payment.

CUSTOMS, SALUTATIONS, ETC.

The correct salutation among Machinga Yao and Matenje on meeting is clapping the hands, the hands in front of and at right angles to the body parallel to each other, thumbs against the fingers. The clapping should be continued for ten minutes after having passed; after passing a chief it should be continued for half-an-hour. M Y 576

Another form consists in slowly beating the breast with the right hand, the head slightly inclined forward. The lower in station makes salutation first to the higher, a man to a chief, a woman to a man; exception is made in the case of an old woman, who is saluted by the man. Scattered all over the country a raising of one or both arms is a common form of salutation, but is probably only a corruption of the military salute. M Y [559] [607]

Slapping of the nates or thigh with the right hand is also seen, among old men usually. In imploring mercy from, or on the first occasion of meeting, the chief, a man lies prone on the ground and catching the foot of the chief, puts it on his neck—a sign of absolute submission. Women kneel at the approach of a man. Words and expressions of salutation are few—*Moyo* (=heart) being the only old expression used. Now commonly one hears a word (sounding like *ochoi*) probably a corruption of good morning, and the Swahili greeting *Salaam* with the double hand-shake of Mohammedans. M Y [201] [562] [177]

A man returned to his village after an absence waits awhile, then his wife comes to him and kneeling greets him, *moyo*, her husband returning *moyo*.

Years ago, a man of any importance was received with firing of guns and shouting. A headman is received now with *Mwaphale*, the women wobbling their tongues in their mouths. Ashes are put on the head as a sign of *joy*. M Y [152]

In the morning the husband and wife do not greet each other, but in the village friends "give each other good morning" (=*Moyo*). On waking in the morning, a woman cracks all her joints (=*Kulim chale*). She then massages her husband and cracks the joints of his fingers. M Y [502] 576

One man wishing to see another goes to his house, and squatting outside the door cries "*Ahe!*" three times (=there), at the same time clapping his hands. If no answer be given he goes away, even though he knows the man is within, no answer meaning that the inmate does not wish to be seen. If invited to enter he does so, the man of the house rises and gives him salutation. He makes small M 579 576

2: Mitchell E-5 (1946-1949) 1956 FT7 Yao FT7

culties are settled by the marriage sureties[1] who only report to him after the affair is settled. In disputes of unusual gravity, the headman may call in unrelated persons[2] to arbitrate, but he himself must be present.

His own behaviour is expected to be exemplary. Any deviation from the norm is likely to be strictly censured, not only by his own villagers, but also by other village headmen, who may say, 'Important men do not behave in this way.' A man who had an argument with his sister's son was told this. He had taken the dispute to a neighbouring headman who decided against the village headman and rebuked him for behaving in a way not consonant with his position. Village headmen should be above squabbling with their villagers. A village headman who was also a lerch had virtually raped a woman whom he was treating. He tried to maintain this was part of the treatment. Her matrilineal relatives reported the matter to the headman of her village and he brought the errant headman in front of the chief who said, 'You are wrong to do this when you are an important man. You are a big man and you act as a commoner does. You ought to be able to show the commoners how to behave.' He was made to pay a compensation of £2 10s. and fined 10s. Had he been a commoner he would have been made to pay a compensation of only 30s.

The ultimate sanction to which all headmen are subject, is that their people will leave them if they behave badly. This was the fate of Cikumba.

In 1944 Cikumba had a village of about 30 huts. The son of the first Cikumba, Meya, had two wives who were living virilocally in Cikumba's village. Meya had enlisted in the army. While he was away, Cikumba, the village headman who was Meya's father's sister's son (though he called him 'father' because of positional succession), started taking Meya's two wives to beer drinks. Meya's sister one day asked Cikumba about his behaviour, but he only said that Meya could not do anything as he was far away. Things had gone too far, however, when one morning he was seen coming out of the

[1] The representative of a spouse in all affairs arising from conjugal relationships. They are usually senior matrilineal relatives. See Chap. VI, pp. 176–9. Their role is discussed fully in *Marriage among the Machinga Yao of Southern Nyasaland*.

[2] *Mundu jwanyumbali*, i.e. a person from outside.

1: Tew E-4 (no date) 1950 FT7 Tao FT7

Ehale (plur. *mahale*), a breast. This includes all who are supposed to be descended 614
from a common ancestress. Often the direct line of descent from the founding 613
ancestress is not known for more than three or four generations. The small groups
which can definitely claim to be 'of one breast' constitute the distinct matrilineal [621]
groups which live together in separate hamlets within a village. Each is undifferentiated
in relation to other matrilineal groups, but internally each is differentiated on the
principle of sibling unity.

The main emphasis of the kinship system is on the bond between a man and his 593
sisters. Their relationship is summed up in the word *ndumba* (translated by Mitchell
as 'sorority group'). A man speaking of his *ndumba* refers to all the women he calls 602
sister, their daughters, and their daughters' daughters. Strictly speaking, female kin
in the ascending generations are excluded, as belonging to the *ndumba* of his mother's
brother. The 'warden' of a sorority group, *anyene ndumba*, is the senior of the brothers
and is responsible for the behaviour of the women in his charge; he appears for them
in court and pays fines on their account. He plays an important part in the marriage
negotiations. It is his duty to consult the diviner if his sister or her child falls ill, and
to be chief mourner at the funeral of either of them, also providing medicine for the
ritual purification at the end of the mourning period. Formerly these obligations were
balanced by certain rights. He could sell some of them into slavery for his own
personal reasons. This privilege is ended, but even to-day it is through his sorority
group that a man achieves status and independence.

The principle of sibling unity is expressed in many other ways. A man and his 601
sister reciprocally call each other *ahombwanga*. More usually, a woman calls her 602
brother, older or younger than herself, *animwewi* (a term of respect usually applied to
a chief), for any brother may be regarded as warden of her sorority group. A man has
the same duties to his younger brothers as to his sisters, so they also call him *animwewi*,
but he calls them *mpwanga* 'younger brother', as they can never be in the position
of warden in relation to him. Maternal uncles are called *ahombwe*, and a sister's
son *ripwa*.

Within each matrilineal descent group, differentiation takes place between members 602
according to whether they are siblings or not. A man's sorority group included ideally 593
his own siblings and their female matrilineal descendants. His sister's daughters are
also the sorority group of his sister's son, their brother, so that any woman can belong
at any one moment to the sorority groups of her brother, her mother's brother, her
mother's mother's brother, &c., but the effective one is that of her own brother, if
adult. He is consulted first in small disputes, and at the marriage ceremony each party
is represented by a brother as well as by a mother's brother. In the break-up of a
hamlet (described below, p. 11), siblings tend to hold together more closely than
cousins and to form groups of their own, so that each woman in the descent line is a
potential point of cleavage. Tension between brothers as they compete for control of [593]
the sorority group is a source of friction within the sibling group which eventually
leads to its disruption.

Since marriage is mainly matrilocal, and extra-village, the husband in his wife's 591
village is seen as a stranger by all the members of her matrilineal descent group.
There is a tendency for members of such descent groups to live together in a cluster 621
of huts. The word 'hamlet' is used by Mitchell to indicate a cluster of huts, in which 619

1: Tew E-4 (no date) 1950 FT7 Yao FT7

return to the *lapunda*, where the initiates are welcomed by their friends. An essential part of the ceremony which takes place at this stage is the exhibition of animal shapes made by the *m'mizwa*, with mounds of earth outlined in flour. These animal shapes differ from lodge to lodge. On the last night before the return to the village the initiates undergo a ceremonial bathing, each boy being carried to the stream by a woman, who thereafter is addressed as 'elder sister'. Finally, with new names, and freshly oiled and decorated, they march to the chief's village to be redeemed by him from the *m'mizwa* with gifts of cloth. After initiation it is a deadly insult to call a boy by his child-name. All who pass through initiation together consider themselves bound by mutual obligations of hospitality.[1]

Girls' initiation takes place in three stages. First, there is *cipwite*, the general initiation before puberty, which corresponds to the boys' *lapunda*. It takes place at the same time of year, and though it lasts for less than a week, its conclusion is celebrated at *lapunda* jointly with the conclusion of the boys' initiation. A hut is built in the bush, like the long dormitory of the boys, and four days are spent in dancing and singing. Each girl (aged about eight years) is accompanied by a sponsor, a woman friend who continues to be her mentor during subsequent rites, and who assists in giving the girl instruction in her womanly duties. At the end the girls are bathed and anointed, dressed in new clothes, and each is carried to *lapunda* by her sponsor. Here they prove their skill in dancing and receive gifts from their friends. Ritual deflloration follows the *cipwite* initiation.[2] Among Mohammedans, clitoridectomy used to be performed by a woman sponsor, but, it is said, was discontinued in about 1919 on account of the heavy mortality.[3]

After this first general celebration, first pregnancy and first birth are the occasions of separate rites for each girl. According to some informants there were once two ceremonies connected with pregnancy. One, for the young married men whose wives had not yet conceived, used to take place at the same time as *cipwite*; each man was attended by a woman sponsor not his wife, given good advice, and put through various tests of manhood. Mitchell does not confirm the present existence of this ceremony, but in the old days if a man was betrothed or married to a child going through her *cipwite* he had to accompany her.

The *ilimo* ceremony takes place when a young married woman quickens with child for the first time.[4] The women, with her sponsor and the married women of the neighbourhood, went out in procession for a ceremony of singing and dancing and instruction to the young couple, followed by a feast. Nowadays no men are allowed to attend *ilimo*. A child born of a woman who had not undergone this rite used to be buried alive; nowadays her sponsor adopts is charged by the chief.

Finally, six days after the first child is born, its naming ceremony forms a last initiation rite for its mother. The husband is formally led into her hut by her sponsor and the married women of the neighbourhood, and the child is taken out for the first time to the accompaniment of feasting and dancing.

Most Yao men and women act as sponsors of initiates at least once, and all parti-

[1] Sponsors for boys' initiation: Stannus and Davey, 1913; Werner, 1906, pp. 124-6; Stannus, c. 1910, pp. 147-83; Hodnel, 1922, pp. 19 sq.; Johnston, 1897, p. 409; Weule, c. 1909, p. 300.
[2] Stannus, c. 1910, p. 150. [3] Stott, c. 1906, p. 196.
[4] Stott, c. 1906, p. 174; Hodnel, 1922, p. 23, calls it *cimoto* (*lodge*).

2: Mitchell E-5 (1946-1949) 1956 FT7 Yao FT7

175 2. Free men are under their elder brother in the first instance, but
565 they may carry their cases to the headman of their village or
622 even to the chief of the country.
643 3. Slaves were entirely under their own master.[1]

The headmen's subservience to the chief is described in the following passage:

In all public transactions the headman represents his village. He receives the chief's orders and sees them carried out. When he kills
[561] an elephant he sends one of the tusks to the chief. Should he kill twenty elephants he is not expected to give up twenty tusks—two or three would be sufficient. If he shoots a large buck he gives one haunch of venison. For all such tributes he expects to receive in
[616] return a present (generally a little powder). . . . He is expected to
913] attend the chief's parliaments unless he is under an elder brother in which case he is not allowed to speak, except when especially commissioned. Headmen are expected to report all cases of war, but they often attack enemies without telling their chief beforehand, saying,
[921] 'Let him hear of the enterprise when it succeeds.' Yet this is dangerous unless they are sure of success, and well acquainted with the chief's private sentiments. On reporting an attack they present the chief with part of the booty. In times of war each headman when summoned, must follow his chief's flag, otherwise his village is burned
[48] down, and all that fail to escape are killed or enslaved.[2]

175 Yet within the framework of this organization villages were
578 markedly autonomous. MacDonald's description, which I have
622 just quoted, brings this out very well. Elsewhere he writes:
643 'The chief may often have less influence than powerful headmen, and we have known cases where he simply contented himself with grumbling when his headmen acted contrary to his desire.'[3] The chief did not differ greatly from his more powerful headmen. A certain amount of ritual in terms of ancestor worship embellished his position, and he had some ascendancy over village headmen to whom he had given land. Yet, in the last analysis, the chief had to rely on his personal following and military power to subjugate headmen who were becoming too powerful. The chief was therefore in direct competition with his subject village headmen, and involved in a constant struggle with them for followers. MacDonald describes how the chief himself was a

[1] MacDonald, *Africana*, i. 133.
[2] MacDonald, *Africana*, i. 133.
[3] MacDonald, *Africana*, i. 133.

2: Mitchell E-5 (1946-1949) 1956 FT7 Yao FT7

village headman and had to administer his slaves and relatives in his village in the same way as a village headman.[1] MacDonald shrewdly observes:

175 578 622 643

Where the chief sees occasion to interfere with his subordinates he generally consults his own interest. He will say to a headman, 'I see that you have been behaving badly to that subject of yours. You cannot get on with him: he must leave you and come and dwell in my own village.' The chief thus secures another servant.[2]

Another writer observed, 'As a chief's power consists of the number of his subjects the loss of a man is a serious matter.'[3]

175 622 643

A village headman also tried to strengthen his position against the chief and against other village headmen by attracting to himself as many followers and dependants as he could. The process whereby a man might increase his status is described as follows:

556 567

However large the settlement may become, the man that is first in the field is the chief or headman. In course of time he adorns this position by acquiring wealth. He may shoot some buck and get possession of their skins. With these he goes to the Mangoni country and buys slaves. An old person he obtains for a single skin, but a young slave costs two, and women cost much more than men. The female slaves then bought are his junior wives and he keeps them busy in hoeing the farm, and all such female duties. The male slaves he employs in farming, building, making baskets, sewing garments and such masculine pursuits. He keeps all these persons strictly at their duties, and at the same time welcomes an opportunity of selling them as a profit. If his daughters were unmarried, he would give them slave-husbands. The natives aim at 'replenishing the earth and subduing it'. As it is no expense for them to rear families, they are all desirous to have many children.

Besides this increase of the village from the chief's own resources, there may be an accession of freemen. After the settlement is begun, a man may come to its founder and say, 'I wish to live with you.' The village chief gives him permission and calls him 'younger brother'. The newcomer brings his family, builds a house, and cultivates a farm in the same way as his chief. A freeman may leave his present chief and take up his abode with another, whose subject he becomes. His former chief has no longer any authority over him

175 622 641 643

[1] MacDonald, *Africana*, i. 134. [2] MacDonald, *Africana*, i. 133-6.
[3] Hynde, R. S., 'Among the Machinga People', *The Scottish Geographical Magazine*, viii (1892), 656-63.

2: Mitchell E-5 (1946-1949) 1956 FT7 Yao FT7

(22) pressing their claims on many grounds. They may stress that
559 they have a large village under them and that they have many
81 children to initiate, and argue that their villages are far away from the nearest headman who has these rights. Or they may use their rank and connection with the chief. If all else fails they may threaten to move to another chiefdom. Punyu threatened to do this.

(22) In 1947, Punyu, an Administrative village headman in Chiwale's area,
559 had 43 tax-payers under him and thought that he should have initiation
81 rights. He had come to Chiwale's in 1933 after the village had split
578 in Chikowi's area near Zombe. He had relatives in Kapalowa's village in Chiwale's area. He argued with Chiwale that his uncle had had initiation rights. Chiwale on the other hand, argued that Punyu village was so close to his own—a matter of under a mile—that he could not consider it. This argument went on for some months. Eventually Punyu told the chief that he was going to leave his area. Chiwale then retreated to some extent and offered Punyu the permission to use the *ciputo* basket, that is, the right to conduct girls' initiation ceremonies. Punyu, after consulting his sister, took this and was satisfied.

But the chief is not always cowed by the threat to leave his area. He is sometimes able to draw on his official position to control his headmen. The argument between Makata and Ntimbuka illustrates this very well.

Makata was an Administrative headman of some standing in Chiwale's area. He had been one of the invading headmen and was entitled to wear the scarlet headband. In 1947, he had 101 tax-payers under him and had been given the right to hold boys' and girls' initiation ceremonies at least 30 years ago. Ntimbuka on the other hand was a comparative newcomer. He came from Kawinga's area in about 1930. He is of Nyanja stock but has adopted the Yao language and customs. His village in 1947 had 23 tax-payers and was about 300 yards from Makata's. Early in 1947, Ntimbuka started quarrelling with Makata about the right to boys' initiation ceremonies. He felt that he ought to have rights as well as Makata. Eventually he told Makata that he would refuse to take the boys to his initiation ceremonies. Nothing with discretion Ntimbuka went to complain about Makata to Chiwale, and told him that he had had an argument with Makata and that he was going to leave the area because of it. Chiwale called Makata and asked him what the trouble was. Makata told Chiwale that Ntimbuka was jealous of the basket. Chiwale

2: Mitchell E-5 (1946-1949) 1956 FT7 Yao FT7

then told Ntimbuka that he could not give a sacrifice basket to him because his village was so close to Makata's. Ntimbuka was not satisfied with this and continued agitating. Chiwalo, at last exasperated, threatened Ntimbuka that if he had any more trouble he would send him to Kawinga to be dealt with. Kawinga of course is the Native Authority in the area and holds the power of arresting headmen under Section 12 of the Ordinance. Ntimbuka was duly cowed by this threat and meekly agreed to send his boys to Makata's initiation ceremonies.

Chiwalo had to support Makata against Ntimbuka. Makata was a powerful headman: he had rank from his descent and a large village under him. Ntimbuka was a Newcomer and he had only a fifth of the followers that Makata had. If it meant losing followers it was better to lose the smaller village. As it was Chiwalo could use the power of the White Administration to keep Ntimbuka within his area and yet keep him subservient.

A Newcomer is unlikely to be given both boys' and girls' initiation rights. He is more likely to be able to get only one of the rights. Table XVI sets out the number of headmen in

TABLE XVI

NUMBERS OF HEADMEN HOLDING BOYS' AND GIRLS' INITIATION RIGHTS AMONG ABORIGINAL, INVADER AND NEWCOMER HEADMEN

Type of Initiation Right	Aborigines	Invaders	Newcomers	Total
Both boys' and girls' init. rights	—	17	14	31
Boys' init. rights only	1	6	10	17
Girls' init. rights only	1	11	31	44
No init. rights	16	84	158	258
Total	18	119	213	350*
% init. holders	11·3	29·4	25·7	26·3

Combining Aboriginal and Invader totals.

$n = 31$; $\chi^2 = 6{\cdot}48$; $p = 0{\cdot}01254$.

* Total excludes the 24 headmen who have the right to wear the scarlet headband.

each category who hold initiation ceremonies. While more Invaders have the right to both ceremonies the proportion holding

2: Mitchell E-5 (1946-1949) 1956 FT7 Yao FT7

The chief as an important village headman

[601] is usually addressed by a kinship term, either *baba* (father) or *ambuje* (master or grandparent). When he is referred to, his
643 name is not used. Village headmen are owners or wardens of
622 villages (*anyese min*) but only those headmen of some standing
554 are referred to as *mwenye*.
178

Important village headmen, like the chief, are in mystical
643 danger from pollution by death. They cannot come to the hut in
622 which a corpse is lying; and they cannot eat the chicken which
554 has been brought to them by relatives of the deceased to announce
761 the death. Like the chief too, an important headman may be buried in a tomb in his village and not in the graveyard.

But an important element in their relationship nowadays is
643 that the Administration will support the chief against a village
622 headman when it comes to a trial of strength, and that a headman
554 these days is precluded by modern conditions from setting up
578 chiefdoms as he did in the old days. Village headmen therefore
691 must struggle for power against their fellows and the chief within the modern Administrative framework. Some attempts are made to resist the power of the chief but these are rarely successful. The dispute between Liwonde and Ndenda illustrates this.

Ndenda was an Nguru headman, who in 1947 had 284 tax-payers under him (Liwonde, the chief, had 186 in his village). Ndenda had come into Liwonde's area before the White invasion and had surrendered with his relative Mlelemba, to Liwonde. The second Liwonde had given him both initiation rights but, unlike his relative, he did not have the right to wear a scarlet headband.

In 1938 or thereabouts, Liwonde decided to move his village site from the Shire River to its present site about half-way up the Great Rift scarp. He sent two of his young men to look for a suitable site, and to plant some mango trees there when they had found one. Ndenda heard of this and sent one of his men to take Liwonde's men into custody. He took their hoes away and then told them to go back to tell the chief they were planting in his (Ndenda's) land. In due course Liwonde moved up to his new site, and asked Ndenda why he had taken the hoes away and whether he owned the country, i.e. was the chief. Ndenda now argued that Mlelemba's ancestors had been given the rights of chieftainship over this area and that the first Mlelemba in the area had given Liwonde some elephant tusks for these rights. Liwonde replied that the chief has a right to tusks and that many had given tusks to him but were not entitled for that reason to rights of chieftainship. Liwonde handled this situation by calling a meeting of the village headmen in the area. They assembled

2: Mitchell E-5 (1946-1949) 1956 FT7 Yao FT7

and the claims of Ndenda were debated. The headmen supported Liwonde in his claim that the tusks were part of the chief's rights and that when Mkelemba had come he had come 'to get fire from the chief'. Liwonde then upbraided Ndenda for imagining that because he had so many followers he was a chief, and fined him 10s. for being insolent.

The struggle between Liwonde and Ndenda did not end however. Some years afterwards a man came to Liwonde and said that he wanted to live in his area. This man was a complete stranger and had no relatives there. Liwonde sent him to Ndenda's village. Later while living in the village, this man stole some cloth. He was arrested and Ndenda brought him to the chief saying that the chief was responsible for him. Liwonde told Ndenda that he was being insolent again and that the responsibility must rest with him because the man had married into his village. He ordered Ndenda to pay £1 to compensate the victims of the theft. This Ndenda did but in his view this was tantamount to being chased out of the chief's area. He therefore moved with his children across the boundary northwards into Jalasi's area, and told his unrelated villagers to follow him. They refused to leave Liwonde's area. He was helpless and could do nothing about it. He returned to Liwonde's area a broken man and died shortly afterwards. His eldest son took charge of the village [illegible], but so far no successor has been found.

The struggle between Ndenda and Liwonde has some interesting features about it. The strength of the chief in his Government position is not as evident as it has been in other struggles, as, for example, between Jalasi and Kalonga, or between Chiwalo and Ntimbuka, in the cases I cited earlier.[1] It appears only indirectly. Ndenda did not appeal to the District Commissioner against the fine as he might have done if he had felt his position to be more secure. The case history also shows how Liwonde ranged his other important headmen, 47 per cent of whom were kinsmen or co-invaders, around him against Ndenda who was neither. It shows also that Ndenda's reaction to what he felt to be an injustice, typically enough, was to emigrate and to try to injure the chief by reducing his followers. When this failed he was defeated and it was his downfall, for, like a chief, 'a headman without people is nothing'.[2]

[1] Pp. 86 and 96.

[2] Mfumbwa nayo mapendekela ilimbu nyuwo mulimbu: 'A chief who has no people is not a chief'—a saying frequently quoted to emphasize the dependence of the chief on his subjects.

2: Mitchell E-5 (1946-1949) 1956 FT7 Yao FT7

villages, however, the headman's activities may be as circumscribed by ritual prohibitions as the chief's are.

The village headman is subject not only to mystical dangers but also to other dangers deriving from his position of authority. It is significant that villagers never go to a diviner to find out the cause of a village headman's death. When I asked informants why this was so, they said, 'Well, what's the use of it? He has enemies on all sides in the village who are trying to kill him with their magic.' In harmony with this view of village headmanship, the symbolic object which represents the village headman in the diviners' gourds I have seen, is a small ring of grass (*singwe*), a copy of the grass cushion women place on their heads when they are carrying loads. This symbolizes the ring of enemies which surrounds the village headman. The saying 'the tortoise defecates on the one who carries it',[1] usually applied to chieftainship, applies equally well to a village headman.

A village headman may expect little material benefit from his position of authority. If he is an Administrative village headman he may be paid a small annuity of 5*s.* or 10*s.*[2] Returning labour migrants may give him a blanket or a military overcoat, or perhaps a few shillings, but this is not usual. If he is not a strict Moslem he will almost certainly be given a pot of beer from every brewing made for sale in the local 'club house'. On the other hand, if an important stranger, particularly a White official, arrives in the village he feels he must give his guest a chicken. It is manners to reciprocate with another gift, but not all Whites know this, or, if they do, do not observe it. In particular if the chief comes to his village, he will be expected to entertain him and here can expect no recompense—the chief 'eats from his country'.

The Yao know that the position of headman is no sinecure. Frequently the one chosen to succeed refuses to accept the position, especially if he is well placed in employment. It is significant that the word for an heir is *lingwe*[3]—the one who is trapped. An

[1] *Nyuma jikwenda nayowe tangipale.*

[2] Until recently this was true. As I was leaving the field in 1949, I heard that the Administration had decided to abandon this system in favour of one in which only group headmen would be commissioned.

[3] Substantive form of the passive of the verb *lumpa*—to set a trap as for animals. This word is not widely known, especially among the younger Yao.

2: Mitchell E-5 (1946-1949) 1956 FT7 Yao FT7

disease *ndaba*.[1] This disease, as we have seen, affects the sexually 613
inactive when they are brought into contact with those who are 763
sexually active. But the disease will only affect the members of the matrilineage of the errant person. For example, suppose a labour migrant is coming home from Southern Rhodesia and has, among other things, a few pounds of salt in his baggage for a gift to his relatives. Suppose also that while he is returning he has promiscuous intercourse. The salt becomes charged with sexual heat and if he gives it to any of his matrilineal relatives to cook with, they will contract this disease. He must therefore give the salt to members of another matrilineage, even if they live in the same village.

It is when the unity of the matrilineage is threatened, by either 613
death or division, that its mystical value appears most clearly. 765
When a member of the matrilineage dies the whole matrilineage 834
is thrown into mourning and remains continent for three days. On the fourth day they perform a ritual purification and some members resume sexual relations, but the closest matrilineal relatives, such as the mother and uterine siblings, remain continent for the remainder of the mourning period, which is about 36 days.

It is tension within the lineage which is most closely attended 613
by dire results. The most important effect of this tension is 626
accusations of sorcery. Good relationships among members of 764
a matrilineage are adjusted, mainly because friction opens the way to sorcerers. The Yao believe that sorcerers kill their matrilineal relatives so that they may share the flesh with other sorcerers. The sorcerer is fundamentally a wicked person and may kill any relative but is more likely to kill those whom he hates. Hence it is most important that relationships are kept amicable within a matrilineage for fear that sorcery ensues.

An interesting variation of the dangers of sorcery is the belief 613
that sorcerers take the opportunity of squabbles within a matri- 754
lineage to kill one of the members. The rationale behind this 578
is that the diviner's instruments are unable to detect the origin of 626
the sorcery beyond the immediate cause. A diviner will indicate that the cause of death of, say, a child is sorcery, but that the witch is concealed behind the quarrelling words of some relative. Consequently, danger to a matrilineage ensues when one of its

[1] See Chap. V, p. 111.

2: Mitchell E-5 (1946-1949) 1956 FT7 Yao FT7

613 members goes to an outsider and grumbles to him about the
754 family squabbles[1] and quarrels. The outsider then takes the
opportunity of using this squabble to introduce his sorcery into
•578 the lineage. The Yao greatly fear backbiting because of their
626 dread of sorcery and none dreads it more than a village headman,
a warden of a sorority-group,[2] or a person in the position of
having to keep a matrilineage or section together. These people
are continually adjuring the women under them—for it is the
women who are believed to be the main culprits—not to fight
among themselves; and if they do, not to take their complaints
to an outsider but to the senior member of the matrilineage. The
significance of this in relation to lineage unity is plain enough.

613 Apart from sorcery, strained relationships between members of
578 a matrilineage are believed to be dangerous for other reasons.
893 Malice may adversely affect people who are in mystically danger-
224 ous states. The most common of these states is pregnancy. If
a woman has a quarrel with a matrilineage member while she is
pregnant she is likely to have a difficult labour. The Yao say
'the womb has heard these bad words'. Another situation
where malice or quarrelling will cause difficulties is in hunting.
The luck of the chase is capricious and malice may easily bring
bad fortune to an otherwise good hunter. For example, a
successful hunter once gave each of his two sisters a piece of
venison. Each complained that the other had been given the
larger piece and quarrelled vehemently about it for weeks. The
hunter now found that no game fell into his traps. He went to
a diviner who indicated the quarrel of the sisters as the cause of
his failure and told the hunter to get them to 'blow water'
(*hupenye*). He did this; good relationships were restored and
his traps were filled once more.

613 These deleterious effects, like the curse, are connected in some
way with the ancestor spirits. This is sometimes expressed quite
578 clearly when a person is called upon to 'blow water'. A
761 mother who wishes to revoke a curse, a woman who wishes to
recant her malice towards her matrilineal relative who is suffering
755 in childbirth, or a man whose sister's son is ill supposedly because

[1] This is called *ntuni*, which I have translated as 'backbiting'. This idea is extremely important, as we shall see later.

[2] i.e. those men who are responsible for their sisters and their descendants. See p. 143 ff.

2: Mitchell E-5 (1946-1949) 1956 FT7 Yao FT7

of his malice towards him, might equally be called upon to do this. The person makes a statement to the effect that he bears no malice and hopes that the sufferer will be well. For example, a woman in Cikoja's village who was called upon to 'blow water' during the labour pains of her mother's younger sister's daughter's daughter,[1] because they had quarrelled over a sifting basket, put some water in her mouth, spat it out and said: 'Those words I spoke: the basket is mine. This is my child. Both are mine. When I spoke and asked my child about it, they were not words to place in my heart, so that to-day we should have to go to the diviner because my child is hitched[2] and be accused because of the sifting basket. These words I push aside. I do not know whether there are other words that we fought about, but if they are these, my daughter's child come out!'[3] Sometimes the ancestors are specifically invoked, '*Conde, conde dumauka* . . .' 'Please, please, O spirits . . .' This is a public confession of the tension within the lineage and it allows the lineage leaders to attempt to straighten out the difficulties, as they did in this case.[4]

These beliefs in mystical dangers of one sort or another which beset the matrilineage as the result of bad feelings within it, have the effect of constraining matrilineage members to maintain peaceable relations among themselves and are, therefore, conducive to maximum solidarity.

It is clear from MacDonald's writings that in earlier times the periodic offerings to the spirits of the ancestors was a valuable way in which the solidarity of the matrilineage was expressed. With the introduction of Islam and Christianity these sacrifices have disappeared. I have not worked in Christian areas long enough to be able to say whether the ancestor cult still persists. In the northern area, however, I can say that the ancestor cult survives as part of the practice of Islam. Periodically, feasts are held in

[1] See the history of the division in Cikoja lineage, pp. 163-6.

[2] *Kukolekwa*, i.e. the child cannot be born.

[3] *Uwe nakilingula ciele cile cangwe. Aje mwamanga. Yenge yangwe. Pinamwetuga ndumaya, hambeya mwamanga, ngwiwa nakilile gakwiha hambwa, gati ngwiha kile ndumaula hwiwanga nakulekwa mwamanga ndumaula mwe lipenga lya ciele. Cikoja ngwiwaula. Kwalini ungupali gati gwawa hangwila nambe ungwanga nakilile gakwa, ciulula ungwa cilungwa.*

[4] I have drawn attention to the cathartic effect of accusations of sorcery and public confession of guilt in a paper, 'A Note on the African Conception of Causality', *The Nyasaland Journal*, v, 2 (July 1952), 57-8.

2: Mitchell E-5 (1946-1949) 1956 FT7 Yao FT7

It is difficult to over-emphasize the importance of the sorority-group in everyday life. There is hardly a social situation in which the relationships of a man to his dependent female matrilineal kin are not involved. Probably marriage is the most frequent context in which his duties to and responsibilities for his sorority-group emerge. When a man wishes to marry a woman, he must get the consent of her brother. Ideally, it is a woman's brother who gives the consent, and if one asks a Yao how he gets married to any particular woman he will answer immediately, 'You go to ask her brother.' When consent has been obtained the woman's brother seeks out the man's brother and formally meets him, thereby setting the public seal on the relationships between the man and the woman. This gives the husband particular rights over his wife and her activities. After this, the difficulties of any of the marriage partners are the concern of the two sponsoring relatives (*ainamangowe*) whom I have called 'marriage sureties'. They meet to discuss the illnesses of either of the marriage partners or their children and try to settle the differences that arise in the married life of their wards. They must be consulted before the marriage can end, and in fact they perform the act that ends the marriage, i.e. one pays a nominal sum of say 2*s.* to the other.

According to the Yao, women are quite helpless in their relationships with others, in illness or in any court cases, and must always have a man to look after them. They are seen to be as dependent on him as children are upon their parents. A statement made to me by old Naliwa, a man who has been looking after a sorority-group for years, reflects this attitude of the men towards the women in their care.

These dependent women (*mbumbe*) are as annoying as children to look after. They *are mimi*[1] indeed. If a child is ill they go to tell their brother who says, 'Very well, I shall come to see the child.' If he is not very quick to do it they are likely to be backbiting. If he finds the child very ill he goes to tell the marriage sureties of its father, and they go to a diviner to look for medicine for the sick child. Then the sisters say that he is a good man because he gets on with the job when a person is ill.

Soon the child's mother becomes ill. Someone goes to tell her brother who says that he will come to see her. He visits her husband's

[1] Backbiting. See Chap. VI, pp. 137-8.

2: Mitchell E-5 (1946-1949) 1956 FT7 Yao FT7

SQ
578
593

marriage surety and together they consult diviners and find medicine until she recovers. Then he goes back to his village.

He has no sooner got back when someone comes along to tell him that the child is ill again. He says, 'I am busy, I have some work to do. Tell someone else to go to the diviner.' The messenger goes back to his sisters and they say to each other: 'He is not a good man. He refuses to go to the diviner for the child.' Another says, 'Yes, it is so. Our brother is not diligent and when he comes here he will get no food from us. He eats our food but he does not work for us. Let us ask someone else to look after us. Our younger brother is a good man indeed.' Then everyone agrees that this should be so. The one that all said was a good man before, they all now say is bad. Then the sisters go along to tell the other brother who says, 'Go and tell my older brother.' The sisters reply that he is not a good man and say, 'We want you to look after us.' He agrees and goes to the diviner to get medicine.

The next morning a husband goes off to his village without saying goodbye.[1] The wife now goes along to tell her younger brother who says that he can do nothing about it and that she will have to tell her older brother. She returns to her village crying, and tells her sisters that she told her brother about her husband's leaving and that he refused to have anything to do with it. Then one of the sisters says, 'Yes, the older one is a good man, not like that bad young one. If this one were the older one he would have already gone to get the man back.' Others say, 'Yes, that young one is not good at all. He is a sulky one. Is he not a sneerer? Go to the big one and tell him.'

Then the woman goes to the hut of the older brother and tells him of her difficulties. He tells her to go and fetch her husband and if he refuses to come back, to tell him. This she does and he refuses to return. She reports this to his older brother. He tells her that his younger brother will return and if he does not they will come to talk matters over. The woman goes back to her village and goes to see her older brother to tell him what she has done. He says, 'Very well, my sister, if he does not come to-day I shall go there to-morrow. Now go home and give the children some food.' When she goes back to the village she says, 'That brother is a good one indeed. He is diligent. He is going to fetch my husband back, if he does not return to-day.' If the man has not come by the next morning the woman goes to tell her brother. He goes to the husband's

[1] *Kumdoko*—to go off in a huff, to go off without saying goodbye. This is a sure sign that there is something wrong and that some action needs to be taken.

2: Mitchell E-5 (1946-1949) 1956 FT7 Yao FT7

village and seeks out his marriage surety. They call him and tell him that the woman's brother has come to take him back to the village. He says that it is all right and that he will follow that evening. The brother goes back and tells his sister to cook porridge because her husband will be coming that evening, and then he goes home. The husband returns.

The woman now goes to tell her brother that her husband has returned and he says that he will come to visit him in the morning. Next morning her brother comes to the hut and asks her husband why he had left. 'You were cross about something and you did not come to tell me. Now tell me why you left.' The husband now tells him and they talk it over. If they fail to reach an understanding they go to tell the husband's surety and discuss the case fully. If the woman is wrong her brother reprimands her and if the man is wrong his surety reprimands him.

To live with a surety-group needs courage.[1] You must not listen to backbiting. If you listen to the tales of others then you will not be able to live with your surety-group because your heart has no firmness. A surety-group needs a man who has no fear. Then the women listen to what he says. He will say to his sister, 'Sister, hoe your gardens well. Do not have intercourse in the bush because it will finish your children with sale.[2] You must respect your husband and not tell him lies because he will not trust you and will be frightened of you. Listen to what I tell you. Things will be peaceful in your house if you come to tell us what is going on. If you do not tell us then there will be lots of friction.' Then the people say about a man whose sisters are not very happy, 'Who is that man who is not watching[3] his surety-group well?' Then the people will mention his name and they will laugh at him. If the surety-group are living happily together he is a good man and he does not listen to the backbiting. His surety-group are obeying him well and he lives happily with them.

In this account one cannot but be struck by the ambivalence of the relationship of brothers and sisters. Now they hate each other and now they love each other, depending largely on the fortunes of the moment. But the tie is the strongest in Yao social structure; while the relationships between the surety-group and any particular brother may vary, the relationship between brothers and sisters in general is unassailable. When

[1] Wichichikiba mitsu; perhaps more literally translated as 'a stone heart'.
[2] A reference to adultery. See Chap. V, p. 111.
[3] In the sense of watching them the right way to live, or their manners.

2: Mitchell E-5 (1946-1949) 1956 FT7 Yao FT7

The events leading up to a split as a village usually follow a definite pattern. Very frequently indeed an accusation of sorcery is involved.[1] This usually stimulates a dissatisfied warden to gather his dependants together and to move off to found a new village. Elsewhere I have set out in detail the typical events which precede a village break-up when the lineage splits after a man quarrels with his mother's younger sister's son.[2] These splits are not always successful because the seniority of the older relative, especially if he is a headman of some standing, may serve to retainte the village, and the leader of the dissident group may be unable to maintain its independence. This is what happened in Mwambujila village.

Mwambujila is one of the more important village headmen in Jalasi's area. The tension between him and his mother's younger sister's son Mbwana Somo reached a climax after a series of deaths among Mbwana Somo's children. He consulted a diviner and found that Mwambujila was the sorcerer causing these deaths. Mbwana Somo was very angry at this and told his sisters that they ought to leave the village and go to live in Liwonde's area, i.e. about 15 miles away. Eventually he persuaded them to move and they went to live on the Mazuje river banks. But the deaths continued. The women now started to be worried because they had left Mwambujila's village

[1] The implication of this cannot be understood without some knowledge of Yao divining procedure. The type of divining is usually by gourd and objects (*ukombe*). The diviner first of all establishes the reason for the visit, i.e. death, illness, theft, or whatever it is. He then consults his gourd and throws into his hand a variety of symbolic objects. He builds a story round these objects, and finally pronounces that he sees some person whom he vaguely defines. The consultor is then asked to mention who this could be. Though sorcery is supposed to be practised mainly in order to get human flesh for ghoulish feasts, it is not believed to act haphazard. In other words, a sorcerer is supposed to select his victims for revenge as well as for meat. The selective processes at work, therefore, when the consultor seeks to reconcile the diviner's findings with his own suspicions, are that he should select someone who is obviously evil, i.e. from his point of view, one with whom he has been quarrelling, and he should appoint the possible motivation for sorcery. After he has made the selection the name is noted by the diviner and the consultor may later submit a chicken to the poison ordeal to test the diviner's findings.

This, of course, confirms Evans-Pritchard's analysis of Azande witchcraft and I have acknowledge my debt to him for stimulus both from his book and from the discussions we have had on the topic. I assume his analysis in my discussion. See Evans-Pritchard, E. E., *Witchcraft, Oracles and Magic among the Azande*, Clarendon Press (Oxford, 1937).

[2] In *Seven Tribes*. Case History II, 301.

2: Mitchell E-5 (1946-1949) 1956 FT7 Yao FT7

as he was supposed to be the sorcerer. Suspicion fell on Mbwana Somu and eventually one of his sisters went back to Mwambajila and complained to him. Later the sisters consulted a diviner and found, as they suspected, that Mbwana Somu was the sorcerer. Thereupon, they returned to Mwambajila and left Mbwana Somu living alone with his wife.

Here is an example of a village which did not manage to maintain its identity but returned to be re-integrated into its village of origin.

Conflicts between collateral brothers are not frequent. This is for two reasons. Firstly, the opposition between lineage segments is usually expressed in a conflict between a man and his mother's brother, a fact which is no doubt related to the opposition of proximate generations. Secondly, lineages seldom persist long enough to contain within them several segments in which collateral brothers are leaders.

Conflicts seem to occur more frequently among uterine brothers, a fact which is significant in the light of the particularly strong bonds which unite them. The relationship between uterine brothers is much the same as that between sisters.[1] They are intimately linked by their bond of kinship and depend on one another for care and support. Usually the elder brother has his younger brothers in his care, in the same way that he has his sisters.

But at the same time they compete for the control of the sorority-group. A man, we have seen, can seek prestige in the indigenous political system only by becoming a village headman. He can become a village headman only by mustering his sisters and setting up a small hamlet with them. The elder brother prevents his younger brothers from doing this because the sorority-group is usually under his care. The younger brother can gain control only if he can persuade his sisters that the elder is a sorcerer, or incapable, or in some way unsuitable for his position. Hence the frequent accusations of sorcery among brothers: it is a rationalization of a hostility arising from the structural position of uterine brothers, which, in view of the commonly accepted strong sentiments uniting brothers, may not be otherwise expressed.

The break-up of Mpondi's village in 1940 clearly illustrates

[1] I have dealt with this more fully in my essay in *Seven Tribes*.

2: Mitchell E-5 (1946-1949) 1956 FT7 Yao FT7

how the opposition of brothers emerges in a situation where the lineage is concerned.

578
593
Cal

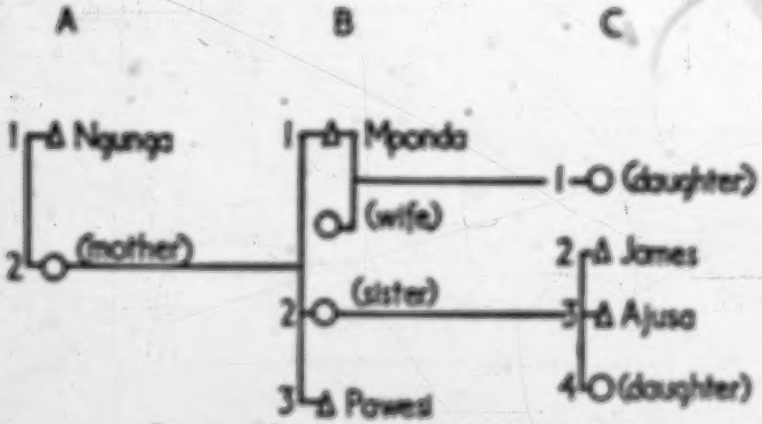

Reference Genealogy. Mponda Village.

Mponda, a village headman, was married virilocally. One day his daughter went to the pounding point in the village and found that her cross-cousin, the daughter of the headman's sister, was there. A quarrel arose between the two girls over the pounding mortar. Presently they started to fight. The wife of *Mponda* then came out and caught hold of her husband's sister's daughter and beat her. *Mponda's* sister had gone to draw water and was just returning. She heard her daughter crying out and ran to the place to find her sister-in-law beating her. The two women had a quarrel about this and separated with bad feelings. The next morning the quarrel broke out again. In the altercation that morning the headman's sister rebuked the headman's wife for behaving in a way which did not befit her position. The headman's wife on the other hand threatened to leave the village if this went on. The bickering continued for some time and eventually the two women came to blows. The headman's sister, who got the worst of this encounter, now decided to take the matter up to the headman. When she told him about it he refused to listen to her complaint. He told her that he had brought his wife to the village and that he did not want to have her treated like a slave. Another sister now chimed in and said that *Mponda* ought to invite his younger brother along to help him to settle the case. Another recommended their leaving him altogether because he was telling his wife to despise his sisters. To this *Mponda* replied that the village was his and that his sisters were only children

2: Mitchell E-5 (1946-1949) 1956 FT7 Yao FT7

578 and that he could not understand who could be inducing them to
593 talk like this. He told them also that as far as he was concerned they
621 could report the case to whomsoever they wished. The women came out of the hut and went straight to Pawesi who was the headman's younger brother. He told them to go back and to wait a while before they took further action.

578 After four days had passed the headman's sister who had fought
593 with the headman's wife, became ill. In the morning the sisters sent
759 a message to Mponda but he did not come. They sent another
787 message to Pawesi who came and asked if they had told Mponda. They said that they had, but he had refused to come. Pawesi called James and Ajuna, the sister's sons of the headman, and told them that he would tell the headman that they were going to find out the cause of the illness. This they did. The diviner indicated that the headman had caused the illness by sorcery, because of the fight between his wife and sisters. Pawesi tested the divination by giving a chicken some poison. It died, indicating that the divination was accurate. He took the chicken's head to Ngungu who was Mponda's perpetual mother's brother.

When Ngungu heard this he refused to believe it. However, he agreed to send for Mponda and to ask him about it. When he did so Mponda denied the accusation. Ngungu now produced the chicken's head and accused Mponda of being a liar. At that moment a child came to tell them that the woman was dead and the interview ended. They went to the funeral and the next morning they decided to have a post-mortem meeting (*mapito*) in order to decide the cause of the death. Mitumoni, one of Nyambi's perpetual sons, represented the chief. Ngungu opened the discussion by telling the meeting that the woman had been killed by the headman because of the fight between his sisters and wife. Mitumoni asked how they knew this and Ngungu told of the divination and the poison ordeal. He then asked Mponda if he had heard what had been said and what he had to say. Mponda replied that he knew nothing of it. Ngungu said that Mponda was a bad man and that the others would leave him and he would have to live alone. Mitumoni told Pawesi and Ngungu that they must not leave the village. Ngungu replied that it was impossible to stay there while Mponda was so bad. If the women stayed with him he would finish them all. Pawesi collected 30 of the 40 huts that made up the village and took them away to Chikwesi's area, a distance of about 15 miles. Those who stayed behind with Mponda were his 'children' and some unrelated people.

593 This case brings to the fore the position of the younger brother
578 as a constant challenge to his elder for the care of his sisters.

2: Mitchell E-5 (1946-1949) 1956 FT7 Yao FT7

The threat that lies over the head of an inefficient warden of a sorority-group is that of losing them to his younger brother, and it is scarcely possible to exaggerate the frequency with which this takes place in Yao society.

Intra-lineage Takeover and Succession Disputes

The competition between brothers is heightened where the succession to an important name is involved. The rule of succession indicates a man's eldest sister's first-born son as the rightful heir. Informants in Jalasi's area told me that long ago the succession used to pass along the line of collateral brothers first, before dropping a generation to the sister's sons. It is true that in Jalasi's genealogy there are one or two early successions from a man to his most senior brothers, but recently the succession has passed regularly to sisters' sons. MacDonald, writing in 1880, quoted the succession rule for the Mangoche Yao to be 'from a man to his eldest surviving brother and then to the sister's son',[1] but he describes in another part of the book the dispute for Malemia's name involving the deceased chief's younger brother and his sister's son, in which the sister's son's claims prevailed over those of the younger brother.[2] Stannus, writing of the Machinga in 1922, gives the rule of succession as I found it,[3] and suggested that MacDonald's interpretation of the Malemia succession dispute in 1875, was really a mistake, and that both disputants were sisters' sons of the head chief, but of different lineage sections. I cannot decide which account is true, but there seems to be no reason why MacDonald's general rule should be incorrect, especially since so much of the other material he recorded seems to be accurate. Also, as far as I could see, there are no differences in the Mangoche and Machinga Yao in successions to-day, so that it seems likely that there has been a change from adelphic succession to a straight system of matrilineal primogeniture. One is tempted to find a reason for this in the strong emphasis on patrilineal primogeniture in Islam, which was becoming widely accepted in these areas in the middle of the nineteenth century. Unfortunately I cannot bring direct evidence to support this hypothesis.

While the succession rule may indicate someone as having the

[1] MacDonald, *Africana*, i. 189. [2] MacDonald, *Africana*, ii. 190.
[3] Stannus, 'The Wayao of Southern Nyasaland', 277.

2: Mitchell E-5 (1946-1949) 1956 FT7 Yao FT7

the children of Ncilaga (C5) and Bt. Mkwinda (C6). There was a big difference in the ages of these two women. Ncilaga died nearly 30 years ago but Bt. Mkwinda died in 1948. When Cikoja V (C1) died in 1936, Salimu II (D3), who was born in about 1914, was very much younger than the present Cikoja VI (E7), who was born about 1895. Ncilaga (C5) had no sons, nor had Atabiya (D1), her eldest daughter, so the succession passed to the only son of Amaliama (D2) who was the senior male in that generation. Salimu II, genealogically senior to the present Cikoja, is to be the next headman. He has married a 'cross-cousin' (his mother's mother's brother's daughter's daughter's daughter) and lives in the village. He has already taken over the affairs in one section of the village. The other section has moved out and built about half a mile away with the present Cikoja VI. Note that the junior house—i.e. the descendants of Citeleka (A2)—are completely out of the succession. Wegami's (E1) eldest son, Cilimba (F1), is living virilocally with Cikoja VI in his section of the village and is already opposed to the prospective village headman Salimu. He is likely to be the village headman after Salimu dies and may even push his claim when the present Cikoja VI dies, because Salimu has been accused of sorcery on several occasions.

The conflict between sister's sons and mother's brothers at successions has all but fallen away. The people oppose with some vigour the idea that a younger brother should succeed. Frequently the chief or headman would rather his younger brother succeed, and sometimes indicates him as his successor. Kawinga, for example, has given his pre-succession name of Mlomba to his younger brother and many say this is tantamount to announcing Mlomba as the next Kawinga. This is violently repudiated by most people I have spoken to and they indicate a sister's son as the likely successor. Jalasi too, before he died in 1941, indicated Mbawa, his mother's younger sister's son as the successor, but when it came to the point a sister's son succeeded. The weight of custom is in favour of the sister's sons and usually the succession is fought out among uterine or collateral brothers in the first descending generation.

A matrilineal relative is always chosen to be chief in preference to any other, but sometimes there is no heir. Other things being equal an unsuitable matrilineal relative will be chosen, or a

2: Mitchell E-5 (1946-1949) 1956 FT7 Yao FT7

adjusts itself to the changes in its composition. At this point I wish only to indicate how the differentiation among the various segments of a matrilineage is reflected in the way the members site their huts in a village.

The Segmentary Process

The segmentary tendencies within the lineage are countered by unifying forces, but the cleavages between the lineage sections show up at the slightest provocation. Once the cleavage starts it widens rapidly and charges of sorcery become more and more frequent between the two sections until eventually one moves out to found a new village. A cleavage of this type has been developing in Cikoja village for the last eight years. When I left the field in 1949, talk of migration was in the air but it had not yet happened. I summarize the major events which led to the present situation.

The cleavage first manifested itself in 1942 when Bt. Mbwana (F2)[1] fought with her mother's younger 'sister' Ayesi (E8). These two were pounding at the same place in the village and Bt. Mbwana took Ayesi's flat sifting basket. She retained it for about four days without telling Ayesi that she had it. One day Ayesi saw it at the pounding point and asked Bt. Mbwana where she got it. They had a few words about it and Bt. Mbwana returned it and thought no more of it. She was pregnant at the time and was confined about a month later. It was her fifth child but she had a greatly prolonged labour. After labour had been going on for some hours, Cilimba (F1), her eldest brother, thought that there must be something wrong and sent his two younger brothers, Kasui (F3) and Gwili (F4) to a diviner. The diviner indicated that the cause of the difficult birth was that her 'younger mother' Ayesi was bearing her malice,[2] and advised that Ayesi should blow water from her mouth and declare that she bore no malice. Kasui and Gwili returned and went to Bt. Amina (E4) who was Ayesi's elder sister and told her what the diviner had said. Bt. Amina did as she was advised and fetched Ayesi to the door of the hut in which Bt. Mbwana was lying, and made her confess. The child was born immediately. After a week Cilimba and Kasui brought a complaint to the village headman Cikoja (E7). They accused Ayesi of trying to kill their sister. Cikoja sent a message to

[1] The reference numbers refer to the genealogy in Appendix D.

[2] Difficult labour is usually assumed to be due to adultery, but it may also be due to sorcery or malice. See p. 138, and Chap. VII, p. 185.

2: Mitchell K-5 (1946-1949) 1956 FT7 Yao FT7

his elder uterine sister's first-born and second-born sons, Amidu (P18) and Kanyenga (P19), to advise them of this dispute, and told them that they would have to assume responsibility for the actions of their mother's younger sister, Ayesi. At the same time he sent to a neighbouring village to call in an unrelated man to act as arbitrator in the dispute. There was much argument and eventually the arbitrator awarded 15s. to be paid by Cikoja as leader of the junior lineage section to Cilimba as leader of the senior section. Amidu and Kanyenga found 10s. between them and gave it to Cikoja to give to Cilimba. The other 5s. they said they would try to find and pay later.

This payment formally settled the dispute but the tension was near to the surface. Amidu and Kanyenga said that there was separation in the group now that they had started to eat money. They were not wrong. Ayesi was pregnant and near to confinement. When she was confined her labour was as difficult as Bt. Mbwana's (it was also her fifth confinement). When her birthpang confusions seemed to be unavailing Bt. Bwana Isa (P16), her elder sister's daughter, went to Kanyenga to tell him that their 'younger mother' was having a difficult childbirth. Kanyenga remarked that she had had many children before and had not suffered, so that there must be some reason for her difficulty. Then Kanyenga and his sister went to Ayesi's husband's sister's hut [1] to find a representative to go with them to a diviner. When they got there Ayesi's husband's sister told her son to accompany her brother's wife's representative to the diviner. The diviner indicated that the cause of the prolonged birth was the malice felt by Bt. Mbwana because the rest of the compensation awarded had not yet been paid. He said that the only thing to do was to call Bt. Mbwana and to get her to blow water from her mouth at the hut door where Ayesi was confined. Bt. Amisa went to find Bt. Mbwana and made her do this. Immediately Ayesi delivered a stillborn child.

The next morning Amidu and Kanyenga went to Cikoja and blamed him for the stillborn child.[2] Cikoja called Cilimba to listen to the complaint. Ayesi was inconsolable. She said that she had blown water for the sake of Bt. Mbwana who to-day had a child, whereas she was mourning her child. Once again Cikoja called in outsiders to act as arbitrators and the members of the two segments gathered to settle the dispute. At the end of protracted wrangling

[1] Ayesi was married to her MMMBD5 (Kasili (D11)), whose lineage lived in another part of the same village. See genealogy and hut count in Appendix D.

[2] Cikoja is a representative of his lineage even to the lineage members. This accusation simply means that the blame lies within the lineage.

2: Mitchell E-5 (1946-1949) 1956 FT7 Yao FT7

the arbitrators awarded 30s. compensation to be paid by Cikuju to Cikoja, less 3s. owing. This money was to be paid to Ayesi in compensation for the loss of her baby. Ayesi, however, refused to accept the money because she said she wanted to have her baby. The matter now became an inter-segment affair and Cikoja, Amidu, Kanyenga and Kaifa (F36), the son of Ayesi, with Bt. Amina had a meeting on what to do. Ayesi was quite adamant about it. There was nothing to do but to drop the matter, and the state of tension between the segments remained as it was before. 613 578 945 683

The next incident occurred in 1943. Mpukula, the husband of Bt. Amina, had some goats. One day two of them strayed on to the verandah of Bt. Madi's hut. Bt. Madi (F10) was the daughter of Awusa (F2) and a member of the senior lineage segment. One of the goats moved its way into a basket of flour that was lying under the verandah and started to eat it. Bt. Madi came out and picked up a log that was lying nearby and threw it at the goat. It broke the goat's leg and the goat had to be destroyed. The owner, Mpukula, who was watching at that moment immediately rebuked the woman. He went and reported the matter to Cikoja and he sent a message to Mpukula's marriage surety who sent back to say that they would meet at Chiwalo's hut the following morning. The arbitrator in the case finally decided that the correct action should have been to take the goat to the owner and to lay a complaint against him. As it was he had to award compensation of 30s. to be paid to the owner of the goat. Mpukula, however, refused to take the money. He argued that although the goat was his, so was the offender.[1] He said that he was afraid of sorcery so he would take a token amount of 3s. only. Cikoja gave him this.[2] 578 613 685

A few months later the eldest child of Bt. Bwana Isa (F16) suddenly fell ill and died.[3] Kanyenga, Kaifa and Musa went to the diviner. Kaifa, the son of Ayesi, went as the headman's representative. Kanyenga went as the warden of the sorority-group, i.e. the child's mother's brother. Musa was the marriage surety of the child's father. Kanyenga consulted the diviner who indicated that Kanyenga's mother Bt. Amina was responsible but that she was not a sorceress. Sorcery, he said, was introduced by an unknown person who was using Bt. Amina's grumbling as a screen. Kanyenga refused to accept the finding of the diviner, saying that his mother had never been 'caught' 613 578 754

[1] His wife's collateral sister's child he also calls 'my child'.

[2] Mpukula is a stranger in the village and in this situation Cikoja represents both segments to Mpukula, even though the senior segment is guilty.

[3] Sudden illness, called *ikwesa* or 'the hammer', is believed to be without a doubt due to sorcery.

2: Mitchell E-5 (1946-1949) 1956 FT7 Yao FT7

615
578
759

by a diviner before. He went back and reported the matter to Cikoja who accepted the finding. Katyenga, however, argued that the real sorcerer was using magic to confuse the diviner. After some argument Cikoja sent for the then senior living member of the matrilineage, Bt. Mkwinda (C6), who was living in Chulo district, for Mbande, a perpetual brother, and for Cibwana Kawinga, his perpetual mother's brother. A big meeting was held at which all the important local headmen attended. The case was argued on the point whether Bt. Amina and her husband, who was implicated in the accusation, could be sorcerers. After some argument the court decided that it was impossible for Bt. Amina to be a sorceress without Cikoja also being a sorcerer, so that the accusation now settled on Cikoja himself. The case was taken up to Chiwalo who refused to award compensation. He reviewed the various charges of sorcery that had been made in the village before and observed that after the death of one of the supposed sorcerers the village had lived peacefully. He deplored the new friction and warned that there was to be no migration from the village. He advised Cikoja to mollify his sisters if he could. Katyenga, Cikoja's eldest sister's son, said that he did not think that it would be possible because the headman had virtually accused his sister of sorcery. Cibwana Kawinga now said that there was no question of whether it could be done or not. It simply had to be done.

About one month after this episode, Ajisa (F18), the last-born child of Bt. Amina, who was about 24 years old, died after two days' illness. When he was obviously very ill Katyenga left with Mpalala to call Amido. They went first to wake Cikoja who in turn sent for Gwili (F4) to be his representative. Katyenga went off to a diviner at daybreak without waiting for the father's marriage sorcery. The diviner indicated that there was tension in the lineage which was at the back of the child's illness. Eventually, he indicated that Bt. Ntalika (F3) was the cause of the illness and it harked back to the dispute over the sifting basket and the goat. The diviner prepared suitable medicine and the two went back to the sick child. They got back about 8.30 a.m. and found the people congregated at the hut. In the meantime, Cikoja had sent off another divining party, Amido (F18) and Jasma (F7). Katyenga prepared the medicine and gave it to the child. It seemed to be getting no better and before Amido and Jasma returned Cikoja sent Katyenga and Gwili out to divine again. Then Amido and Jasma returned and indicated that the same person was responsible, and almost immediately afterward Katyenga and Gwili came back with the same result. When Katyenga heard this he went to Chiwalo and reported the matter. Chiwalo sent a messenger to call Cikoja, Bt. Ntalika and her eldest sister's son Cilimba (F1), who was the senior male member of the senior lineage

2: Mitchell E-5 (1946-1949) 1956 F77 Yao F77

613
578
759

ugment. They were to go to Chiwale's hut the next morning. During the night the child Ajisa died, and Chiwale remarked that Cikoja was bad at heart and that he merely killed his people like chickens.[1] Four days later after the funeral a meeting was held to decide the cause of death. The arbitrator and chief's representative was the local court usher. The man's party opened the discussion saying, 'If Cikoja is tired of us he should tell us. To-day he is killing his child. We know that Mpulula[2] has begotten a sheep. The sheep pen is filled and when Cikoja wants to eat he merely eats them.'[3] The arbitrator said that Cikoja had done a shameful thing and that they should make up a divining party to find the cause of death. Kanyenga immediately demurred and said that they had divined three times with the same results. Further divination was a waste of money. He insisted that they called Cibwana Kawinga. The meeting broke up and Cibwana Kawinga was called for. He came a day or two later and the meeting was resumed. He said, 'Cikoja, you are evil.[4] You have found it impossible to keep the village. Now what are you going to do with your children? The man's party says that he is going to take Mpulula away. Your brothers say that they are going to take their mothers away. Now what do you say to this?' Cikoja had no reply to make. Chiwale then said that he would have to pay compensation to his sister. Kanyenga, however, said that they did not want money. They wanted to go away. Cibwana Kawinga here checked Kanyenga and told him that they would take Cikoja and give him a talking to, and instruct him on the traditional way of keeping a village together.[5] Chiwale accepted this settlement of Cibwana Kawinga and endorsed his action.

When they got back, Cilimba told Cikoja and Mbwela that he wanted to move out of the village because his 'mother' had been called a sorceress by his 'brother'. Cikoja was anxious to avoid further trouble and told his lineage members that he was going to build a hut for his second wife some distance from the village because his first wife did not get on with her. He put up a hut about half a mile away across the Nanwewe stream. Cilimba (F1) who was living virilocally, his mother Bt. Ntalika (E1), Bt. Mbwela (F2),

[1] This is a reference to the ghost-motif in Yao witchlore. Cikoja here, of course, is a symbol of the whole lineage, so that this imprecation is directed toward the whole lineage and not to Cikoja personally, as in the last dispute.

[2] The father of the dead child.

[3] Mpulula had begotten eleven children. This is another reference to the ghost-motif.

[4] Uchaw—this word is also used to mean 'polluted'.

[5] *Kala mwaw wakwe mwi*—'the building of a village of old'.

2: Mitchell E-5 (1946-1949) 1956 FT7 Yao FT7

613 Kasui (F3), Bt. Madi (F10), Bt. Aliya (F11) and their children moved
578 across the stream and built with Cikoja. One of Cikoja's wives
259 stayed in the old village and the other moved across. Shortly after this Asimama (E6), Cikoja's sister, decided that she would like to move across to be with the headman. She reported to Kanyenga who sent her to tell Cikoja. Cikoja in turn sent her to tell Amida. Eventually, Cikoja, Amida, Kanyenga and Salimu (D3) had a meeting about it. Neither Amida nor Kanyenga, nor Salimu, was enthusiastic, but they said she should follow her own wishes. She moved across with her children. Asimama's arrival on the other side of the stream was greeted with some suspicion by Cilimba because she was a member of the junior lineage. However, Cikoja assured him that he wanted one of Asimama's daughters to fetch water for him. Cilimba was satisfied with this explanation and accepted the situation as it was.

It was not easy, however, and there were continual quarrels between the children of Bt. Ntalika and those of Asimama. The members of the junior segment in the old village also looked upon this arrangement with some suspicion. The friendship of Amega (F28), Asimama's daughter, with Asubiya (F9), her mother's younger sister was particularly deprecated by the members of the junior segment. Asubiya was warned several times that this friendship could only lead to sorcery.[1]

In the meantime, Salimu (D3), who will be the next Cikoja and who was the senior lineage member in the old village site, undertook most of the duties of the headman in that section. He settled most of the minor cases and saw to the divining. However, he reported his doings to Cikoja who was still the village headman.

In 1948, another death took place and the tension became evident again. Bt. Ntalika's child died. Kasui (F3) and Jasima (F7) went to the diviner, who revealed that Amega had gone to Salimu to grumble about what was going on in the other village, and Salimu had taken this opportunity of bewitching the child. Cikoja refused to accept this explanation and said that the diviner was a liar. When the body was being washed, a knife was found under the mat on which it was lying, and the story went around that a piece of flesh was taken out of the dead child's buttock.[2] Cikoja interpreted this as meaning that Bt. Ntalika herself had bewitched the child. He felt it unnecessary to call a funeral meeting. Shortly after this there was some friction between Amina and her younger sister Asubiya, arising out of jealousy because of the difference in their harvests. Bt. Amina was convinced

[1] This is based on the fear of backbiting. See p. 158.

[2] Once a person is dead the matrilineal relatives do not touch him. They leave the hut and the undertakers (*ndilo*) wash the body and prepare it for burial. They reported this finding to Cikoja.

2: Mitchell E-5 (1946-1949) 1956 FT7 Yao FT7

that Asubiya in her jealousy had gone to grumble to Bt. Ntalika about this. Rajabu (F20) who had heard about this called Cikoja and they assembled Bt. Amina, Bt. Bwana Isa and Asubiya in Bt. Amina's hut, and spoke to them about the dangers of backbiting. Cikoja remonstrated with the women saying, 'I don't want to hear about this again. When you love people do not love people who are strangers. Do not talk behind people's backs and bring war in the knots of your body-cloths.' 613 578 754

A few weeks after this, in June 1948, Alewinda (F27), a 3½-year-old daughter of Asubiya, died. When her mother saw that the child was seriously ill she took her to her patrilateral relatives in Liwonde area. She had barely got there when the child died. The headman of the village sent a message back to Cikoja to tell him of the death. He in turn sent a message to Amidu and Rajabu and they went to the village to attend the funeral. After the first mourning feast three days after the funeral, Kaifa, the child's mother's elder sister's son, and Malawage, representing the village in which the child had died, went to a diviner who indicated that the cause lay in the backbiting of Asubiya about Bt. Amina, but that the sorcerer was Bt. Ntalika. The tension now had reached almost breaking point and after about six months Bt. Ntalika moved out into Liwonde area without announcing that she was going.

At the end of December, Asubiya's son Selemu (F26), aged 4½, suddenly became ill one night. In the morning Amidu and Rajabu and Nkatawila (D20), who was the husband's marriage survey, went to a diviner. He indicated that the cause was a girls' initiation basket which Ayesi kept. This basket, the diviner said, kept losing its strength and it was only on the death of a close relative that it would regain power. They returned and when they got near the village they could hear the women keening. They agreed that the diviner was a liar and returned and got their money back. The body was buried on January 3rd, 1949. Asubiya now left the village without announcing her intention and went to complain to chief Kawinga. Cikoja in the meantime, noticing that Asubiya was not present at the funeral, sent out men to search for her. After two days Kawinga's chief court assessor, Masunda, brought Asubiya back to the village. He told Cikoja that he had cross-examined her and found that she said her elder sister was causing death because of her jealousy over the food. Masunda returned and some days later Kawinga wrote a letter to Cikoja telling him to come to the court village. This he did and was told to hold the mourning feast, but to take the people to the court village to hold the funeral meeting. There a divining party would be arranged and the cause of the death determined. 613 578 754 605

After the first funeral feast the people of Cikoja assembled at

2: Mitchell E-5 (1946-1949) 1956 FT7 Yao FT7

Kawinga's court village. Mazunda reviewed the events leading up to the calling of the meeting and asked Cikoja to give his statement. Cikoja replied, 'You say I am finishing the people. I do not deny it. If the people are being finished by my sister, then I am finishing them.[1] You may speak what is in your heart.' Anthiya now made her statement. After this, Bt. Amina was called out. She denied knowing anything about the case. Mazunda at this point was about to send the case back to Cikoja when Matowa, a second arbitrator, asked who the marriage sureties were. Amidu came forth as the woman's surety. Matowa asked him to tell the court about Anthiya's marriage relationships. Amidu then reviewed the history of Anthiya's pregnancies. He pointed out that the first child had died.[2] The second one also died. The diviner had indicated that she had broken a sexual taboo and the child had died from *ndoko* as a result. The third child was still alive. The fourth had died recently. The fifth was the one about whom there was a case that day. He recounted how they had gone to a diviner and how he had indicated that the cause of the death lay in the backbiting which the person herself had done. Mazunda cross-questioned Amidu about the *ndoko* medicine that was given and assured himself the complainant was satisfied that the second child had died of *ndoko* and not sorcery. Mazunda then called Salima since the woman was living at the old village site under Salima's charge. Salima, who works as a tailor in an Indian store some miles away, said that he did not have a great knowledge of the case. Cikoja said he had nothing to say. Eventually, after some hours of cross-questioning, Mazunda decided that a divining party must be made up and the results of the divination reported to the court. Bt. Amina now stood up and said she was prepared to undergo the poison ordeal to prove that she was not a sorceress. She said that she would go with them to the diviner to find out the cause of the death of the child. Mazunda said that they would leave the matter at that. At the village they would have to decide on a divining party and they would have to give poison to a chicken to make sure that the divination was correct. After that Cikoja would have to report the matter to Kawinga and the case would be re-opened. Nyenje was at the inquest and said to Cikoja that if they were not relatives he would have other words to say to him about this business. As it was he did not see what he had to rejoice about. Cikoja said that he did not know, but that Nyenje should ask the owner of the village. Surprised, Nyenje said, 'Who is that?' Cikoja indicated Salima.

[1] Cikoja is talking as a representative of his lineage here.

[2] The first death in a family is never divined for, because the Yao say that if this is done, it 'would chase the father away'.

2: Mitchell E-5 (1946-1949) 1956 FT7 Yao FT7

Salimu said that Cikoja ought not to speak like that because it only made things difficult.

Two days after this Cikoja called a meeting at Salimu's hut in order to choose a divining party. Eventually they chose Kanyenga, Asinsanu, Raisi and Musa. Musa was the witness for Kanyenga who represented the woman's party. Raisi represented the father's party, and Asinsanu went to be his witness. Cikoja gave them 5s. and they went to look for a diviner. Eventually they found one and Kanyenga opened the consultation. The diviner indicated that the cause of the death of the child was *linkuda*.[1] The party paid him and looked for a place to sleep. The following day they sought another diviner. Kanyenga again consulted and was told that Bt. Ntalika and her son were sorcerers but that the mother herself was ill with *linkuda*. Kanyenga rejected the *linkuda* explanation and insisted on the sorcery of Bt. Ntalika and Cilimba. The diviner consulted again and said that the main cause of the death was the *linkuda* and that the sorcery of Bt. Ntalika was added to the other. Asinsanu here insisted that the sorceress in reality was Bt. Amisa. The diviner rejected this. He said the best way to test the divination was to give poison to a chicken. The party was at a loss to know what to do. In two divinations, a *likanga* was indicated twice, while sorcery was said to cloud the issue. They decided to give a chicken poison. They returned to Rajabu's hut in the village where he had married. Here they sent Rajabu to tell Salimu that they were about to test a chicken at the poison ordeal, but that he must not tell Cikoja. They gave two chickens poison, one for *linkuda* of the mother and one for the sorcery of Bt. Amisa. The *linkuda* chicken died, indicating that Bt. Amisa was innocent. When Cikoja was told this he refused to believe it and sent them to poison another two chickens. The result was the same. He now decided that he would take the divination to a distant place and chose to go to Ngokwe chieftdom. Kanyenga led the divination party again. They consulted the diviner and after much testing and retesting the diviner decided that the sorcerers were Bt. Ntalika and Cilimba and that the *linkuda* had nothing to do with it. He also specifically excluded Bt. Amisa. The diviner now told the father's two representatives to stay behind while the woman's representatives fetched Cikoja. When he came, the diviner revealed the result to him personally. Cikoja was at a loss what to do in this situation. Two divinations including poison tests had indicated that *likanga* was the cause, a third and very exhaustive one had revealed Bt. Ntalika and her son. Neither had indicated Bt. Amisa.

[1] *Linkuda* is a type of pimple (the generic term for which is *likanga*) which, when it comes to a head and bursts, causes the death of the last-born child.

2: Mitchell E-5 (1946-1949) 1956 FT7 Yao FT7

613 Eventually, in March, he decided to take the case up to Kawinga's court. Cikoja was not willing to accuse Bt. Nsalika and Cilimba publicly. Accordingly he went to Kawinga but he did not send for Bt. Nsalika. When Mazunda, the court answer, heard this he refused to handle the case and told Cikoja that Bt. Nsalika had to be brought to court so that they could hear for witnesses. Cikoja and his people came back to the village and nothing more was done about it. In April, Rajabu wrote a letter to Cikoja telling him that he wanted to report him to Kawinga and to bring a charge for compensation against him because he had falsely accused his mother of sorcery.

578 789 615

I left the field in June and do not know what the result was.

The series of events are extremely complex. I have given only a summary of them. Nevertheless, the main themes in the history are clear enough. We see Cikoja as the representative of the lineage of any order whatsoever. We find in particular the opposition of the two collateral brothers, Kanyenga and Cilimba. They are the representatives of the two lineage segments in this situation. There is seldom any doubt about the affiliation of these two personalities. Consistently in the accounts of the divinations each rejects the diviner's finding if it accuses a member of his lineage segment. Note that the divination seance itself becomes a field in which the opposition of the segments is expressed. Kanyenga continued consulting diviners until finally he got the answer he wanted. His opponents rejected these findings and eventually even discounted the chicken ordeal. The diviners' findings and the results of the poison ordeals, therefore, are bandied about between the opposed groups, and though the whole procedure of divination and accusations of sorcery is directed towards the extirpation of discordant elements in the community, in fact, it is only a facet of the underlying cause of the tension—the opposition of segments in an ever-segmenting lineage.

613 578 In addition to the structural opposition of Kanyenga and Cilimba there is a certain amount of tension among Cikoja's uterine sisters. Bt. Amisa, Asimama, Ayesi and Asubiya have all had children. Bt. Amisa is the senior and the relationships between her and any of the other sisters are difficult. In addition to this there is the tension between the generations seen in the attempts of the sons of Amisa to bring a compensation claim

2: Mitchell E-5 (1946-1949) 1956 FT7 Yao FT7

against Cikoja himself. It is important that not once is a member of the junior major segment, that is a descendant of Cinileka (A2), involved in the dispute. Only the descendants of Atabiya (D1) and Amalimu (D2) are involved, with the exception of Salimu who appears as the representative of the villagers on the old village site.

The Opposition of the Generations

Segmentation arises as more and more sorority-groups, the daughters of women, reach adulthood, and as the sons of the same women become old enough to undertake responsibilities for the care of the women. There is, in this situation, a fundamental opposition of generations. A woman is bound to her own sisters and at the same time she is bound to her daughters. These bonds come into conflict when her daughters want to express their unity against their mother's sister's daughters. The mother must decide whether she will go with her daughters to their new village site, or whether she will stay with her sisters and possibly with her own brother. I found consistently that a mother seldom stayed in a village when her daughters were moving out of it. The bond with her children is stronger than that with her sisters. Yet the conflict is clearly present. It finds expression in the kinship terminology. A daughter is usually identified with her mother's mother. A woman's daughter's daughter inherits her name, her position and her property in much the same way as a man succeeds his mother's brother.[1] When this has taken place the terms of address of her parental generation are now reversed. In other words her mother's brother instead of calling her, 'sister's child' (*cipwa*), calls her 'mother' (*amai*). Sometimes the qualificative *ŵamasja* ('who has returned') is used to signify the difference. Her mother's mother's husband even before the succession has taken place calls her 'my wife', and I have recorded one or two marriages between a man and his wife's daughter's daughter. A man's daughter's daughter must also perform some of the funeral rites for her grandfather after his wife has died.[2]

We have among the Yao, therefore, the familiar principle of

[1] See Chap. V, p. 121.

[2] She cooks the ritual meal which he eats at the end of mourning to protect himself against *ndoda*. Here she ritually fills her mother's mother's place.

2: Mitchell E-5 (1946-1949) 1956 FT7 Yao FT7

the identification of alternate generations; and this is particularly significant when we realize that the tension between the filial and parental generations is most likely to find expression in the situation where a group of young adult women wish to leave a village, and their mother, if she is still alive, must make up her mind whether to stay or to follow them.

The existence of rules of succession for men, different from those for women, presents an interesting analytical problem which I have not yet fully explored. Clearly men must succeed to positions in the first ascending generation, for they are the active leaders in Yao society and those who are to succeed must be sufficiently mature to take over the responsibilities of leadership. Women, on the other hand, are usually not leaders so that succession to positions in the second ascending generation involves no difficulties. A young woman may take her mother's mother's name without involving any responsibilities of leadership. Yet the interaction of the two systems of succession presumably has some reaction on the social structure. A man's sister's daughter who succeeds to her mother's mother's position becomes the man's mother and the man's mother's brother's sister. The man's own sister becomes his mother's brother's mother.[1] The effect of this presumably is to achieve some balance of power between a man and his mother's brother. By the rule of succession for women, a man's sister to whom he is tied by the closest possible ties of kinship, and on whom he is dependent for political success, becomes his mother's brother's mother, so forming a common link between two potentially opposed persons. By the same reasoning a man's sister's daughter who is part of his sorority-group and who is likely to desert her mother's mother's brother to go with her mother's brother if there is a conflict, by succession becomes the sister of her mother's brother's mother's brother, so forming a unifying influence within the lineage. This problem emerged after my fieldwork was completed so that I have no evidence to support these suggestions.

Among the men, because of the struggle for political power, the opposition of alternate generations is much stronger than among women. This emerges most clearly in the institution of marriage sureties.

The duties of the marriage sureties towards their wards are

[1] I am grateful to Prof. Gluckman who pointed this out to me.

2: Mitchell E-5 (1946-1949) 1956 FT7 Yao FT7

604 627 sister's son. This, however, is not common because matters such as these, the Yao feel, ought to be settled within the matrilineage, or at least among kinsmen. The sister's usual procedure is for the mother's brother to take his complaint to some senior matrilineal relative who may be a perpetual mother's brother of the mother's brother, as say Cibwana Kawinga is to Cikoia.[1] Or if the matrilineage is part of a village, the mother's brother may take his case to his village headman, who is as likely as not his perpetual father. The senior relatives have the force of authority and public opinion behind them and frequently some agreement can be reached at this level. Where this is not possible, say because the perpetual elder relative lives too far away, the mother's brother may take the sister's son to court and bring the sanction of the Native Authority's punishment upon him. This is very rare.

604 781 There is still a certain mystical sanction behind the mother's brother's control over his junior relatives. This is based on the curse, which in turn draws on the belief in common ancestor spirits. A mother's brother may say to a sister's son or other junior matrilineal relative: 'If you have never sucked from the breast of my sister, nothing dreadful will happen to you.'[2]

604 754 The fear of sorcery is another force which operates to control the wayward activities of a sister's sons. People in senior generations are usually looked upon as having particularly wide knowledge of potent medicines. Though a sister's son may sometimes use sorcery against his mother's brother, the reverse is believed to be more likely to happen. I have recorded elsewhere[3] the details of a case where a sister's son left a village, against his mother's brother's wishes, to find work in town. He subsequently met his death in an accident while trying to get the honey out of a wild bees' hive in a treetop. At home his death was attributed to the sorcery of his mother's brother whose will he had frustrated.

604 578 On the other hand the sister's sons, while bound by an ethical code to honour and respect their mother's brothers, find that in fact these stand in the way of their own personal ambitions. A man's heir is his sister's son and it is quite understandable that there should be some tension between a man and his heir. But

[1] See p. 132. [2] See Chap. VI, p. 133.
[3] 'A Note on the African Conception of Causality', 54-5.

2: Mitchell E-5 (1946-1949) 1956 FT? Yao FT?

the opposition between mother's brothers and sister's sons in general has a much wider basis than this. Any man is likely to have more than one sister's son of whom only one is his heir. Yet his other uterine nephews are as much opposed to him as the heir is. The tension lies in the position of the mother's brother *vis-à-vis* his sister's sons within the segmenting lineage. The different sorority-groups within the matrilineage are held together through the authority of the mother's brother. This coercive force is undermined by the attempts of the wardens of the various sorority-groups to break away and form new villages of their own. In this way the segmentation and differentiation of the matrilineage is really a facet of the general political process in which groups are for ever trying at once to demonstrate their autonomy by setting up new villages, and their unity by remaining in large integrated villages. Conflicts between sister's sons and mother's brothers, therefore, are common.[1] For a typical example we need not go outside the village that I have chosen to illustrate the localized matrilineage.

Ali Kasunka (C6) fell out with his mother's sister's daughter's son Mwanace (D10). The trouble started when Ali Kasunka who had married the sister of the cook came to live uxorilocally in Chiwalo's area. While in Zomba he had asked Mwanace to come to live virilocally in his village to keep things in order. It soon became apparent that the women were not satisfied with Mwanace and every time that Ali Kasunka visited them they had tales to tell of his failure to keep the peace. Ali Kasunka then decided that he would move his village from Zomba area to Chiwalo's where he was married, so that he could stay married to his wife in Chiwalo's area and keep control over the village. Soon after the change had taken place the infant daughter (E15) of Biti Mtemula (D19) became ill and died. Ali Kasunka went to the diviner with Adusoni, the child's father's marriage surety, to establish the cause of the death. The diviner indicated that it was the sorcery of Mwanace. Ali Kasunka took no action on this at all, but he remembered it. Some time later he himself became ill and this time his sisters Asauryeje (C8) and Biti Kasembe (C5) went to the diviner. Once again he indicated that Mwanace was responsible because he was jealous of Ali Kasunka's authority in the village. Tension increased when the husband of Biti Sale (D15), Wayison, became ill. His wife immediately went to tell

[1] In 31 village splits involving matrilineal relatives, 9 hinged on MB–ZS conflicts.

Mwanace. He was the junior marriage survey to the marriage and it was his duty to go to the man's marriage survey, report the matter and arrange to take some action to get the man well again. Mwanace, however, refused to take any action. Instead he cunningly said, 'Take the matter to Ali Kasunka, it is his village.' The woman did so, and Ali Kasunka asked immediately whether she had not taken the matter to Mwanace. She replied that she had and repeated Mwanace's words. Ali Kasunka took the matter up with Mwanace who now objected to being ordered about. Ali Kasunka, however, impressed on Mwanace that the village was his (Ali Kasunka's) and the authority rested with him. He then went to the man's house to tell them of Wayiwa's illness. The man's representative came and he and Ali Kasunka consulted a diviner. They found that the man was ill from *ndoka*, which he had contracted in his home village. They found medicine and treated him and he recovered.

Things came to a head in 1947. Mwanace's younger sister Nyangu II (D11) was married to a soldier who was away. One morning she came to her mother's elder sister, Mhalayao (C1),[1] and told her that she had found semen on her pudenda and could not recall having had intercourse with anyone. Mhalayao told Ali Kasunka about this. It was clearly a matter for divination and Ali Kasunka called Mwanace and told him that they ought to consult a diviner. But Mwanace's attitude, even in such a crime as this, was hostile. He refused and said it was not his work to do this sort of thing. Ali Kasunka therefore went to a diviner with his sister Mhalayao. The diviner said the semen was Mwanace's. He said that he had entered her but magically and had sexual intercourse with her without her knowing it.[2] When Ali Kasunka got back to the village he called Mwanace and asked him what tricks he was playing in the village. Mwanace said that he had done nothing—it was not his village. Ali Kasunka then vaguely hinted at his crime. Mwanace pressed for more details and Ali Kasunka accused him outright of sleeping with his sister. He had hardly uttered the accusation before Mwanace had drawn a knife and attacked him. Mwanace was screaming something to the effect that Ali Kasunka had come to him with lies about having seen a diviner. Ali Kasunka beat off the attack and reiterated the accusation. Mwanace now turned his rage upon the woman and tried to catch her. Two of the men in the village then caught Mwanace and subdued

[1] Her mother, Amaliana, was dead.

[2] This is called *ciponeryo*. It combines the use of magic with sister-incest. To the Yao mind there could be no clearer proof of sorcery. I have already mentioned the importance of sister-incest in relationship to the beliefs surrounding the sorcery-group. See p. 146.

2: Mitchell E-5 (1946-1949) 1956 FT? Yao FT7

him. The woman in the meantime had run to Chiwale's hut half a mile away. Here she complained to the chief that Mwanace wanted to kill her. Chiwale refused to listen to her complaints and sent for Ali Kasunka. When he had come and explained the sequence of events, he continued, saying that he would like to take the case to court. Chiwale, who was Ali Kasunka's wife's father's sister's son (hence a classificatory younger brother) and whose henchman Ali Kasunka was, refused to adjudicate in the case but referred it to Kawinga. On the day of the case the woman's husband came back from the Army. The case was tried and eventually the court assessors awarded a damages claim of £3 to be paid by Mwanace to his sister. The husband, at the same time, said that he could not remain married to her because whenever he saw her he would think that she had slept with her brother and in court he gave Ali Kasunka a marriage termination payment. The tension between Ali Kasunka and his 'sister's son' did not end there however. When they got back to the village Ali Kasunka remonstrated with Mwanace saying, 'Are you not ashamed to have married your sister?' Mwanace said that he could not stand that sort of thing and went back to live uxorilocally.

A crucial point in this case history is that the women did not like Mwanace. Almost certainly there would have been a split in the village had the women had more confidence in Mwanace. The tension between Ali Kasunka and Mwanace, although the conflict is inter-generational, started, as it consistently does, from the relationships of a man to the women of his matrilineage. Without the support of the women, younger brothers or sister's sons are impotent against the power of their senior relatives. It is only when they can induce the women to follow them and to leave their rivals that they can found a new village and thereby begin to earn prestige. Therefore, although the men are the active agents in bringing about a physical act of fission, they are in fact only making manifest a situation which is latent within the lineage.

The position of the senior male matrilineal relative is of fundamental importance in questions involving segmentation. His position is seen most clearly in the dominant matrilineage, in which the name of the village is inherited. The Yao practise 'positional succession'. A man not only succeeds to his mother's brother's name but also to the position of the mother's brother in the social structure as a whole.[1] It follows that when the

[1] See Chap. V, p. 122.

2: Mitchell E-5 (1946-1949) 1956 FT7 Yao FT7

 613

pletely disappeared and we have in its place a straightforward localized matrilineage as in Ali Kasunka village. 621 622

The Headman as the Link between the Dominant Lineage and the Patrilaterally-linked Group

A headman's position when his own children or the children of his predecessor have started to operate as a corporate group in the village is clearly difficult. To the dominant matrilineage they are outsiders, and they are a source of tension in the more complex villages. This, in essence, is the situation about which the officiating headmen have almost certainly warned him at the installation ceremony, when they told him to beware of his wife's chatter, because it may bring about a split of the village. The headman occupies a position of jural authority over his matrilineal relatives. He has succeeded to the name of his mother's brother and is structurally the most senior matrilineal kinsman in the village. He is directly responsible in court and outside it for the behaviour and welfare of the matrilineage members. At the same time he is personally attached to his children by ties of intimacy and sentiment. Where there is a conflict between his own children and the matrilineage members he is placed in an invidious position. By legal right he should support his lineage members, by moral right he cannot spurn his children. What he tries to do as a rule is to browbeat his matrilineal relatives into submission to maintain the peace within the village. He runs the risk, however, of alienating the support of his sisters who may turn to his younger brothers and leave the village. This is what happened in Mponda's village, as I have outlined earlier.[1] Here, it will be recalled, a quarrel started between two young girls over a pounding mortar. It spread to the mothers of the girls, who were the headman's wife and his sister. The headman tried to browbeat his sister into submission, but she immediately turned to her younger brother. The result was that the headman lost his sisters to his younger brother. 578 613 622

The way in which the two opposed groups in the village crystallize out into opposed factions cannot be more clearly shown than in the sequence of events in Mpakata village, in January 1947.

Mpakata was the headman of the village, and he had three younger brothers, Walusa, Merison and Nanculuya. Ali Cibwana, Mpakata's

[1] See Chap. VI, p. 155.

2: Mitchell E-5 (1946-1949) 1956 FT7 Yao FT7

578 613 622

adult son, went to Walusa one day and borrowed a chicken. Some days afterwards Walusa asked for payment for the chicken. Ali Cibwana took offence at the way in which Walusa asked for payment and told him so. Walusa remarked that Ali Cibwana was insolent and insisted on the payment for the chicken. Ali Cibwana now said that if his father's brother insisted on asking in this rude way he would not be paid back at all. The tempers of the two men became more and more frayed until at last Walusa threw Ali Cibwana to the ground. When Sanudia, Ali Cibwana's younger brother, saw this he grabbed up a stick and came up to Walusa and asked him why he had thrown his elder brother down. Walusa had hardly time to answer before Sanudia had struck him. At this Walusa's younger brothers joined in the fight. Mpakata now rushed up and started to support his sons against his younger brothers. When Mpakata's sisters and sisters' daughters, who were pounding, heard this, they took up their pounding pestles (poles about five feet long and three inches in diameter) and came running to Mpakata's younger brothers' assistance. When Mpakata saw these women coming with their poles he dashed into his house and emerged with a stick with which he defended himself. The noise and clamour had by this time attracted a number of strangers from a nearby village and they were able to pacify Mpakata's villagers. The matrilineal relatives of Mpakata gathered in one part of the village and Walusa told them they ought to leave. They decided, nevertheless, 'to say goodbye'[1] to Kaumbwe, who was a perpetual elder brother of Mpakata. Kaumbwe called in an unrelated village headman named Idi, and they held a meeting in the village the next day.

The dispute was discussed in the presence of the arbitrator. Walusa said he wished to leave the village with his sisters. Idi, however, told him that he should not do this but that they should take the matter up to Chiwalo's court. On an agreed day Mpakata and his children and matrilineal relatives went to Chiwalo's court where the case was arbitrated on by Capola who lived near to Mpakata. He found Mpakata guilty and ordered him to pay 10s. to Walusa. At the same time he told Walusa that he was not to take the female members of the matrilineage away from the village. And there the matter rested.

A village headman in Yao 'binds the village',[2] and when the village is made up of linked groups as well as his matrilineal kin,

[1] Ostensibly to say goodbye but in fact to air their grievances.

[2] *Akutawa musi.* The word *kutawa* may also mean to build. Yao houses are built by binding poles together with ropes and then filling the gaps with mud.

[342]

2: Mitchell E-5 (1946-1949) 1956 FT7 Yao FT7

the significance of this formulation of his position is clear. It is when he shows partiality that the village under him is likely to break up. If he sides with his children his matrilineal kin are almost sure to move out; if he sides with his matrilineal kin, his children are likely either to return to their matrilineal village or, if they are adult, split off to set up a village of their own. The situation is precarious for the headman and it is very difficult for him to avoid a split in the village if he cannot keep the two opposed groups at peace.

My investigations show that few villages have contained patrilaterally-linked groups through the lives of two village headmen, unless these groups were descended from slaves. When the headman dies his successor assumes his name and social rôle. He also assumes the position of father towards the remaining children, who are in fact his cross-cousins. But his relationship towards them is not the same as that of father to children. The intimate link of the blood tie has been lost and the relationship becomes formalized. As more and more headmen succeed the genealogical link between the patrilaterally-linked groups and the dominant matrilineage becomes more and more remote, and the relationship becomes more and more casual. What usually happens is that shortly after the death of the headman and father, the patrilaterally-linked group takes exception to what the new headman does or says and moves off to found a village of its own. The case history I quoted earlier [1] brought this out clearly. The new headman had had intercourse with the wives of his 'son'. The son complained to the arbitrators in the dispute that 'he should have been as a father to me, and he is not'. The result was that the son refused compensation, and moved out of the village with his sisters to build on his own. When this happens the father-son relationship between the two villages is preserved and perpetuated, but the link is entirely formal and co-operation between them is limited to mutual attendance at funerals.

Patrilaterally-linked Groups as the Legacy of Slavery

Slave-groups in a village are usually linked patrilaterally to the dominant lineage. This is because the headman who was usually the captor of the slaves kept the women as concubines. They were given quasi-child status in the village, so that their children

[1] 'The Split of Cikumba Village', see Chap. V, p. 127.

601 To Ego therefore, in a lineage linked through one patrilateral link:

605 Any person in the first ascending generation is 'father' or
613 'female father'.
Any person in the same generation is 'cross-cousin'.
Any person in the first descending generation is 'child'.

Those in the second ascending generation are called 'grandparent' and those in the second descending generation are called 'grandchildren'. By the merging of alternate generations, those in the second ascending and second descending generation may also be called 'cross-cousin'.

Where the subsidiary lineage is connected to the dominant lineage through two patrilateral links the kinship terms for siblings is applied to Ego's generation. In Diagram 7 the linked lineage marked A is connected to the dominant lineage through Ego's MMBS. Ego calls his mother's mother's brother's son 'father' and, therefore, calls his mother's mother's brother's sons' children by the appropriate sibling terms.

If a subsidiary lineage were connected through three patrilateral links the kinship nomenclature would be the same as if there were only one link. Lineages connected to dominant lineages through two or more patrilateral links are very rare. Most subsidiary lineages are connected through one patrilateral link only. In any village the generation differences between members of dominant and subsidiary lineages tend to be obscured. The Yao tend to see the component lineages as wholes, and therefore speak of the relationships between members of the dominant lineage and members of the subsidiary lineages in general as 'cross-cousinship' (*cisuwani*). It is only in special situations that the exact relationship becomes important.

605 The pattern of behaviour between cross-cousins is consistent
578 with this view of their rôles in the make-up of a village. In the
621 typical Yao village there are two or three groups who are united in their extra-village affairs but opposed in internal relationships. Their hostility to each other comes to the surface at the slightest provocation, but they are, nevertheless, co-villagers. They are kin and yet not kin, because the Yao look upon kinship as primarily matrilineal. They talk of the link through the father as 'not proper kinship'. The hostility between the members of the different cross-cousin groups in the village is dissipated

2: Mitchell E-5 (1946-1949) 1956 FT7 Yao FT7

in a joking-relationship which is more intense between men and women. Men and women in Yao public life always behave distantly to each other; hence joking-relationships are most intense between male and female cross-cousins. The joking-relationships between cross-cousins of the same sex is much more subdued and limited. The village headman himself, if he is not the actual father of the cross-cousins, is likely to be the butt of most of this. His visits to the huts of his cross-cousins to give them irksome instructions is an especial occasion for this sort of joking. Cikoja ordered his female cross-cousins to sweep a site for my tent when I first went to his village. I was most embarrassed by the insults that were hurled at his head during this procedure, but he took it all calmly and said nothing. The hostility inherent in the headman–villager relationship, together with the opposition between the dominant matrilineage and the patrilaterally-linked groups, provided an opportunity *par excellence* for joking. Thus the joking between cross-cousins in the village context is a means whereby the hostility between the component groups is dissipated and the harmony within the village maintained.

The groups are, of course, welded more closely by cross-cousin marriages which are not only allowed but prescribed. By cross-cousin marriage a man from one of the component groups of the village may marry and yet not leave the village. He may in fact have to build a hut in another part of the village, but this is obviously not the separation that uxorilocal marriage entails. At the same time, in a village where the headmen have married their cross-cousins, there will be fewer patrilaterally-linked groups, so that the village will be less complex and consequently less liable to internal dissension. If cross-cousin marriages were not practised, and if the children of the headmen and senior members of the linked lineages did not return to their matrilineal villages on the death of one of their parents, the intra-village situation could in time become extremely complex. Assuming that each linked group had at least one male member married virilocally, the number of related groups would double itself in each generation.[1] However, because of limiting economic factors I describe later and the disruptive social processes within villages, this situation never occurs in practice, and Yao villages on the whole remain relatively simple in structure.

[1] See detailed argument and diagram in *Seven Tribes*, 333.

2: Mitchell E-5 (1946-1949) 1956 FT7 Yao FT7

As garden land becomes scarcer, members of the village have probably approached patrilateral or affinal kinsmen in other villages for personal grants of land. The lands immediately surrounding the village have long since become depleted and crops will only thrive on lands some miles away; then the village moves its site. How long it will be before this becomes necessary, depends on the fertility of the soil. Most villages must move eventually. When they do they may move a few hundred yards only, or on the other hand, they may select a site thirty to forty miles away. Whether the site is far or near, the migration is not a mass movement of the village as I have so far assumed for the purposes of analysis. As a rule a few villagers, including the headman, move first. The headman may be there a year or more before the second lot of villagers move. They usually move in sorority-groups so that when they build at the new site they place their huts in sections. Thus, the internal social organization of the village is reflected in the same way as before. The whole move may take three or four years before it is completed.

This process of development of the village and its gradual and continual reformation is sometimes hastened by the conflicts that appear within it. I have from time to time mentioned various conflicts that have led to the split of a village and the subsequent migration of one of its sections. The new section sets up a small hamlet in a distant locality, especially if the reason for its secession was sorcery. Here the general process of evolution is started anew. Its parent village, however, is strengthened by the migration since the dissident elements have left it. It continues to carry on its existence and to throw off other villages from time to time.

The number of villages, in the area I studied, is increasing with the increase of population, but the average size of each village remains constant and appears to have done so for many years.[1] But at the same time some villages as entities are disappearing while new ones are being formed. A few new villages become resorbed by their parent villages when for some reason they cannot continue their separate existence. Other villages fragment and do not split. The individual village members leave the village and go their separate ways. Very frequently when

[1] See the argument in Chap. II, p. 40.

192

The dog.....*uwe uwe!* (as in best).
The cat.....*ngusi!*
The cock.....*kukulikie!*
The lion.....*lu lu lu!*
The duck.....*kwa kwa kwa!*
The cow.....*mwa!*
The sheep.....*kwi!* (as in bitter).
The goat.....*mbi!*
The dove.....*ewe ewe!*
The lion.....*ng'wanang'u!*

195 578 Among the Yao, abuse and obscene language are rare; expressions which appear in other languages all the world over are only used on great provocation and commonly with dire results. This, too, is opposed to the ways of neighboring tribes, the Anyanja and Angoni, who freely make use of such expressions as "*Nyini ya maka!*" and "*Nkonga wa maka!*" "The pudenda of your mother! Clitoris of your mother!"

The following exclamations of abuse and expressions of obscenity will be seen to follow very closely upon those in other countries.

1. *Mwinichana!* (to a girl or woman), *mbulule!* (to a boy or man) means you are a person who has not been to your *Unyago*, and therefore "you are without manners!"

2. *Mwana mkongwe!* an expression to a child meaning "you little wretch," "you nasty little thing!"

3. *Akulile kwi kpasi!* he eats with the back of his hand, he is uncircumcised, i.e. "he is a dirty person!"

4. A man with big ears is hailed "look at your ears like a lemur!" (*Likomba*, a lemur).

A Yao woman seldom or never sneers at or uses bad language to a man nor the converse; the woman, however, is not behindhand in the art of bitter complaining and nagging.

[207] Pulling down the lower eyelid with the finger accompanying some exclamation has exactly the same significance as in European countries, "I am not so green as I look!"

Ku-soupa is to make a sound like "pish" with the mouth, and is a great insult, for which a man will fight.

Screwing of the lips to one side as in the action to get rid of the sour skin of a fruit, *ku-mun'g'uupa* is an expression of contemptuous disgust.

695 539 The similarity to European ways is again seen in swearing or taking oath. A Yao swears by the spirits of his ancestors or by a chief:

"*Chirini cha Malemya!*"
"(By) the grave of Malemya!"

or he may indirectly name some ancestor:

"*Ngulumbila lipanga!*" or "*Ngulumbila liimba!*"
"I swear by the spear!" "I swear by the lion!"

3:Stanova D-5 (ca. 1912) 1922 FT7 Yao FT7

Both before and after the introduction of guns, the Yao used spears, *lipanga*, and bows, *ukunja*. The spear is a five foot long throwing spear with metal head and wooden shaft. No shield was used. Bows and arrows are made from the wood of the *tuse* or *pimbingolo* tree. The string is made of tendon. A double-bellied bow called *ukunja wa mbama* was sometimes used, but, I believe, originally came from the Anyanja. The arrows, *mpamba*, have a metal arrow-head, and were often poisoned with *kombe*. 411

Hunting. The same weapons are used in hunting: the gun, the spear, and the bow and arrow. Smaller bows and arrows made with bamboo or reed shaft are also employed for shooting birds; one of the arrows has a blunt wooden head and serves to stun the bird. 224 411

From the Anyanja, the Yao learned the use of a harpoon for spearing the hippopotamus. The harpoon is a heavy spear-head of iron about eighteen inches long, attached to a rope and float. From the Anyanja, also, was learned the use of the falling block with spear for killing hippo. [177]

Elephants are caught in staked pits, and the larger antelopes are similarly trapped in pits with the sides sloping inwards towards the bottom, so that as the animal falls lower and lower with expiration, it is eventually suffocated. 224

Small buck are driven by dogs into nets set for long distances in the forest, and then speared or shot. Traps are also set for these smaller antelope and for many other small animals, rodents, etc. Birds are shot or trapped. Bird-lime is also employed. It is prepared from the juices of a number of trees by pounding the vegetable matter in water; the sticky mass so made is applied to sticks or poles. The sticks are placed near drinking places so that the birds alighting to take water become entangled. The poles are affixed to trees so that they appear to be the topmost boughs; this the native does, recognising the common habit of birds to sit on the very top of trees. The strength of the bird-lime is made according to the size of the bird he wishes to catch. [231] 223

Fishing. I am not sure how far the Yao is a natural fisherman. Not long ago he used only a many-pronged spear to catch his fish. Since then, he has acquired from the Anyanja the knowledge of making fish-traps and nets, and of using the fish poison. When the Yao came to live and intermarry among the Anyanja, there was one practice of the latter which they would not adopt and which caused a good deal of ill-feeling. A Mang'anja man coming home after fishing always used to prepare the fish and, leaving some ready to cook, he cooked others for his wife, bringing her water at the same time to wash her hands. After eating her own fish, she cooked the rest for her husband. A Yao would never cook for his wife. 226 [578 563]

Traps. The following is a list of some of the traps I have found in use among the Yao. The sketches will serve to explain their mechanism better than a lengthy description. Some are very ingeniously made, and most recall similar traps made in other parts of the world. 224

1. *Lubonji lua litowola*, a trap for the cane-rat (Pl. XIX, fig. 1).

2. *Lubonji lua mbindi*, a trap for sharp-toothed gnawing animals, so called from

5: Mitchell E-5 (1946-1948) 1949 FT7 Yao FT7

000 authorities to-day: those of the British administration. Yet the headman is a key official, if usually unpaid, in that administration. For example, he has to report suspicious deaths and illnesses and strangers, and he has to see that his villagers keep the village clean, hoe paths, use latrines, follow agricultural and veterinary regulations, pay tax, &c. He is no more ready than they are to accept these as good, but he tries to enforce the rules for he is liable to be punished if he does not, by fining, imprisonment, and ultimately deposition. As he applies these unwelcome and unaccepted rules, his position becomes subject to still greater strains.

II. THE YAO OF SOUTHERN NYASALAND

J. C. MITCHELL

567 554 THE Yao people were notorious at the end of last century because of their reputation as slavers. Livingstone had noted their close association with the Arabs in this trade and much of the effort of the early administrators of Nyasaland was directed to suppressing the slaving activities of the Yao. While the slave trade has been fairly well studied, the associated but different phenomenon of domestic slavery has not been nearly so thoroughly investigated. It seems that domestic slavery was an important part of the Yao social structure in those days, before the coming of the white man abolished at one stroke this and many other social institutions. But, though the institution of domestic slavery ceased to exist, the system of values upon which it was built still survives and still affects the social structure of the modern Yao. We might summarize this system of values by saying that the status of a man depends on the number of people over whom he exercises certain rights and for whom, in turn, he is responsible. In the past, a man could increase his status in the community by acquiring slaves. This he did by buying them with calico obtained through the slave trade, or with ivory, beeswax, tobacco, and other natural products; by taking them in compensation for the death of a relative; or simply by kidnapping them. Slaves were often taken as spouses by the members of the group over which the man exercised his command, or by the man himself as wives, and thus the group was further enlarged by natural increase. Though these slaves and slave-children had fairly well-defined rights, they were not free to leave the command of their owner, and the group was from that point of view a stable one. The leader's command over his matrilineal and other relatives, however, was not so absolute and it is with this aspect of the social structure that I am here concerned. This system of values still persists and forms the basis for evaluating the status of men in the Yao community. [622] The high status of a village headman is usually expressed in such terms as: 'He is a big man—he has many people', or 'he has many huts'. The village headman himself and the men under him are motivated by the same system of values so that in any village at any time there is a balance between the desire of certain members of that village to break away and establish units with their own dependants, and the desire of the headman to retain those people under his charge.

622 ~~554~~ 578 The tensions that exist in this situation are well recognized by the Yao and they always express them explicitly during the ceremonial succession to village headman-

ship. The difficulties of his position are brought home to the neophyte village headman in speeches made by old and experienced men. On one such occasion I heard a man say, 'Some men who marry into a village are bad and can split a village like this one by telling lies to the headman, saying that his sisters are talking behind his back and are insulting him. When a headman hears all this he might break his village by ill-treating his relatives, thus causing himself to be left all alone.' In this way the headman's responsibility for maintaining harmonious relations between the members of the village and himself is emphasized. His failure to do so results in what they call a break in the village—the departure of some of the members to live elsewhere—which is a severe blow to the status of the headman. In fact, he is dependent on his dependants for status, and the Yao are quick to point this out to neophyte headmen, saying, 'A tree cannot grow without branches.'

We can better understand the situation if we consider the social structure of the Yao village a little more closely. The Yao are a matrilineal people and are dominantly matrilocal. They live in small groups of huts scattered fairly evenly over the country and from a few hundred yards to possibly a mile or so apart. Such clusters may contain as few as five or as many as sixty or more huts, occupied by between 20 and 200 people.

These people are almost always kinsfolk, and in the smaller villages they are usually all either matrilineal descendants of a common ancestress or their spouses. In the larger groups there is a more complex situation which I shall analyse below. In the simpler groups there may be no male matrilineal descendant in the village and the leadership of the group is taken over by a senior female descendant of the founder of the village. Usually, however, if the group is large, one of the male matrilineal descendants lives patrilocally in the village and assumes leadership.

The relationship between a male matrilineal descendant and the female matrilineal descendants who are in his charge is signified by the word '*mbumba*'. The word particularly refers to the relationship between a man and his sisters and I have therefore translated it as 'sorority-group'. It includes a man's full sisters, matrilineal female collaterals (whom he calls sisters), their female children, and the female children of those female children, and so on. It is usually used in the sense of 'somebody's sorority-group'. A man belonging to the descent-group of the sorority-group may refer to these women as 'our sorority-group'. The man who is in charge of the sorority-group is referred to as the *ayuwa mbumba*. This could be translated as 'owner of the sorority-group' but because of the property associations with the word 'owner' in our language, I have instead translated this as 'warden of the sorority-group' which expresses more accurately the relationship between a man and his female relatives. Even in those groups where there is a female in charge of the village and no male matrilineal descendant is resident in the group, there is usually some one man, possibly married in some other village, who is warden of the sorority-group. The warden of a sorority-group has certain precise duties to perform on behalf of his charges. First, he is concerned with the good relations between members of the sorority-group and with other such groups. He has to settle most of the domestic quarrels that take place between members of the sorority-groups. Second, and this is considered to be a most important function, he is the person who is the

marriage-surety for the marriages of the members of the group. Briefly this means that he must be approached before a marriage can be legally contracted by any member of his charge, he or his representative is present at the ceremony which formally announces the marriage, and he is responsible for the behaviour of his female relative in that marriage. Third, he is immediately concerned with the physical welfare and health of his sorority-group. He must track down the sorcerers causing their illnesses and supply the medicine to heal them. He has to arrange for the ritual purification of mourners after the death of one of the sorority-group's members. Fourth, he must be present in the court-house if one of his charges is involved in a case and he is usually looked to for the money for the fine. I have known a case not to begin because the warden of the sorority-group was not present. Frequently if the husbands of the female members of his charge default, he has to provide the hut-tax money.

Usually the warden of the sorority-group is the eldest brother of a group of adult full sisters. The younger brothers of the group of sisters, while concerned with their welfare, do not stand in this particular responsible position. They refer to the sorority-group as ' our sorority-group '. The elder brother refers to the sorority-group, be it noted, as ' my sorority-group ', and this sets him over and against his younger brothers. The position that the warden holds, however, is not rigidly fixed, for a younger brother may assume control of the sorority-group if for some reason he is dissatisfied with the way in which affairs are being conducted, and is able so to assert himself.

If we recall that the status of a man in a Yao community is determined by the number of dependants that he can command, it is easy to see that relationships between an elder brother and his younger brother are distinctive. The elder brother is responsible for the actions of his younger brother in much the same way as he is for one of his sorority-group, and the younger brothers have a great emotional attachment to their older brothers. Yet at the same time the elder brother stands in the way of the younger brother in his striving for status, in that while the elder brother is warden of the sorority-group the younger brother cannot be, and therefore cannot have dependants and status. It is not surprising to find that accusations of sorcery are frequently made between brothers and the result often is that the younger brother takes the sorority-group away from his sorcerer brother to some other place and sets up a new village with it. Therefore, one possible source of instability in a Yao village lies in the operation of the kinship system in a system of values which reckons status by adherents.

I have thus far been describing the simpler types of village. In the larger groups it is common for the warden of the sorority-group to live in the village where his sorority-group is. Then he usually brings one (or sometimes more) of his wives to the village, where she lives patrilocally. The daughters that are born to her do not return to the sorority-group from which the headman's wife came but marry and set up households near their mother in the village of their father. Thus there develops in time a second sorority-group in the village, alongside the first sorority-group, and related to it through the headman. At this point we may say that the man's position has changed from that of headman of a village containing a single sorority-group, to the more complicated and less secure one of village headman over a more hetero-

gamous group, in which his jurisdiction over one part of the village arises from his position as the warden of a sorority-group, and that which he exercises over the other sorority-group derives partly from his position as a non-matrilineal relative and partly from his own personal qualities. The warden of the second sorority-group is the headman's own son and it is he who takes over all the functions proper to that position, but the successor to the headmanship is a man's sister's son, usually, though not invariably, the first-born son of the eldest sister. Each village headman in turn brings his wife to live in his village and each headman's wife in turn tends to set up a fresh group which is of a different lineage affiliation from that of the headman. In addition to this the warden of the sorority-group formed from the first headman's children tends in due course to live patrilocally and the children of his wife set up yet another foreign group in the village. Hence, theoretically, with each generation the number of opposed groups in a village doubles itself, and in a few generations, were this to continue, the position would become extremely complex. In fact a village of long standing is seen to be composed of a central lineage group to which the headman belongs, and a series of other lineage groups related to the headman's lineage group through one or other of the past and present headmen of that village. Such groups of different lineage make-up are usually mutually opposed and are held together only by the combined influences of a weak patrilineal connexion with the headman's lineage and the personality of the present headman.

This situation is clearly an uneasy one for the headman. His wife is looked upon as a stranger and is often made to feel it. The headman's sorority-group often expresses its hostility and jealousy towards her. The children of the two groups are on no easier terms. They call each other 'cross-cousin' (*asiwani*) and are expected to marry one another. At the same time the hostility between them is formulated in joking relationships. This critical situation of the headman is made clear to him on the day of his succession. One headman was told: 'As you have got wives, do not listen to what they say. They may be lying. Sometimes they will quarrel with your sisters and say that your sisters have been insulting you. This is false. When you hear these reports you may be unfair to your sisters and the people will say that you have broken your village through listening to nonsense.' Thus when conflicts arise between members of a village the headman is in a peculiar position and it is difficult for him to remain impartial. In such a situation the tendency is to call in an outsider to try to settle the differences. Sometimes these differences are patched up and the village continues as a unit. But, particularly after the death of the first village headman, the tendency is for one of the groups to move away to a completely new area, there to set up a unit of its own.

I quote an actual case to illustrate this procedure:

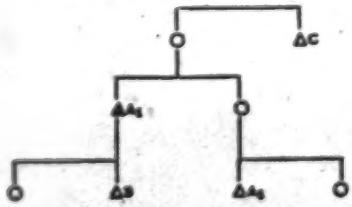

621 'In 1946 village A had about 30 huts in it. A certain man B was the son of the
622 previous headman called A_1 and hence mother's brother's son or cross-cousin of the
578 present headman called A_2. B had two wives living patrilocally and while B was
684 serving in the Army he had a letter from one of his sisters (i.e. his mother's brother's daughter or cross-cousin to the headman) to say that A_2 was sleeping with B's wives. When B returned he started making inquiries from his wives and he eventually secured a confession from them. B then went to a man called C, who stood in the relationship of mother's brother to the original A_1 and complained about the behaviour of the village headman. C also instituted inquiries and ascertained that it was true. C then approached a local headman of some standing (whom I shall call D) and asked him to arbitrate in the case. D pronounced A_2 guilty and awarded compensation of £6. 10*s.* to B. B, however, refused to take the money, and said that he wished to leave the village. D observed that he had every right to do this and that A_2 had no right to complain 'since he had broken the village himself'. B took his sorority-group, who occupied about twenty of the thirty huts, to a place about thirty miles away and set up a village of his own. The sorority-group of the village headman A_2 remained behind in the old village.'

This case illustrates the points that I have made. It shows how the two groups in this village stand opposed to each other in that B's sister wrote to tell him of A_2's conduct. Also when the village did break up it did so along certain very clear lines of genealogical relationship. Second, it illustrates the operation of the desire for dependants in that B refused what by Yao standards is a very large sum of money for compensation and preferred to move off and establish a village of his own. This attitude is also shown by the arbitrator who takes the point of view that regrettable as it is, the village must in the circumstances split, and while he appreciates the headman's feelings he makes it clear that the headman has no one to blame but himself. Third, it is interesting to note that this split took place after the death of the old village headman when the personal ties with both opposed groups were severed. Though the new village headman A_2 assumes the kinship terms of his predecessor and also calls the children of A_1 'children' yet in fact he is their cross-cousin while the old village headman was their father.

622 The position of the village headman in Yao social structure may be summarized
554 thus: the village headman is the leader of a group which may be a simple kin-group
621 or a composite group of two or more opposed matrilineages linked to each other through himself or one of his predecessors whom he represents to them. The numerical size of the village determines the status of the headman, but the size that it can reach is limited by an immanent instability in the kinship structure which is expressed, in terms of their status system, first, in the competition of brothers for the wardenship of the sorority-group, and second, in the competition between the headman and the wardens of the patrilineally linked sorority-groups, who wish to set up villages of their own.

621 The Yao see villages as units and this is clearly shown at the initiation ceremonies
881 of boys, when the initiates are kept in grass-sheds, each partition of which refers to a particular village. In the same way a person is identified as belonging to a particular village known by the name of the village headman. Thus a man might say: 'I come from Kumpumbe's village.'

643 There is little doubt that village headmen did
622 wax in power and finally break away to form the
578 nucleus of a chiefdom of their own. The chief that a headman had left could do little to regain his lost subject and he had to rule not by tyranny but by tact. Duff MacDonald, for instance, records: "When a quarrel arises between the chief of the country and an important headman the latter may rebel and found a new kingdom, thus depriving the old chief perhaps of one-third of the villages in his dominion".[1] Nkanda is an example. "Nkanda of Cherasulo was at first a headmen of Kumpama's but rebelled and lives on the Southern side of that mountain an easy day's march from Blantyre."[2]

643 The leader was known, and is still known to-day, by the term *aryene cilambo*. This might be translated as "owner of the country" but the term "owner" in this context would be a mistranslation. I prefer to translate this phrase as: "The person with whom a certain area is identified".[3] Hence when a man says, as the Yao do: "I come from Kawinga's", he does not mean that the land is owned by Kawinga, but that Kawinga is the most important man in that area.
645 Among the village headmen in the area under a
631 particular leader there were a number of trusted
692 village headmen called *nduna*, which term I
622 have translated as "councillors". These councillors had special duties to perform. They were in the nature of governors in outer areas and each had a number of other villages under his jurisdiction. By this I mean that these villages were supposed to take certain cases for trial to him and to approach the leader through him. The councillors were supposed to visit the village of the chief each morning and to report anything untoward. The councillors also had the important duty of advising the chief, particularly in connexion with raiding of neighbouring tribes. Councillors also arbitrated in the domestic affairs of the chief and in the all too frequent conflicts between the Chief, his sister's sons and his younger brothers.

2: Mitchell E-5 (1946-1949) 1956 FT7 Yao FT7

766 by his relatives. For the feasts during the mourning at a chief's death the food is acquired by institutionalized pillage (*cipinimbe*).
661 The villagers in a chiefdom are often first informed of the death of a chief by the appearance of men from his village. These men are by custom allowed to take from a village any article of food they can find—flour, a goat, some chickens, prepared relish, or whatever is lying around in the village. The owners of the food may not charge them with theft. This food is used in the funeral feast. The excesses to which the chief's men may go became circumscribed after the White conquest. Previously, almost any crime short of murder could be committed under the guise of *cipinimbe*. More recently, owing to Government opposition, it has been restricted to the taking of smaller articles of food, such as flour and chickens. Some people are beginning to object even to this. The chief's funeral is a public affair and all his subjects may attend it. The effect of the *cipinimbe* is to bring together enough food for the chief's funeral feast. Here, as before, the chief's men may not cross the boundary for fear of reprisals, and the effect is to impose a levy in an informal way over most of the villages in the chief's area.

The Chief as a Symbol of Unity

643 The chief is a representative of his people and it is his particular duty to ensure their welfare and that of the chiefdom as
579 a whole. His symbolic representation of the unity of his people is brought out clearly by his right to fines in cases involving bloodshed and arson. Strife and division in a chiefdom in the old days were likely to end in spilt blood and burnt huts so that the Yao associate bloodshed and hut-burning with dissension within the chiefdom.

684 Most other offences are against the individual and not the chiefdom as a whole: the case is brought to the chief so that
685 compensation may be awarded. Adultery and theft thus are definitely civil offences. Nowadays, a fine is imposed, but this is seen to be a White innovation, and the money from it is looked upon as 'Boma' money.[1] In disputes where blood has been shed, however, the chief is entitled to fine the guilty party
682 on his own account. The chief is said to be 'blinded' by the
683 blood and a payment must be made to him before he may 'see'

[1] i.e. Government money.

4: Stannus D-5 (ca. 1909)1910 FT7 Yao FT7 Maravi FR4

M Y 6 4 [579] Men of the same clan must help each other. Two men of different clans fighting will be joined each by men of his clan; such two men may be interfered with and stopped fighting by someone of the same clan, but not by others. A fight between men of different clans is a lasting thing, not so a quarrel in the clan.

Every clan has a (king) *Karonga* and a (prince) *Chilembwe*, who is his son. These grades are only found among the Nyanja peoples.

M Y [264] [554] The Karonga may break bones when eating—this is significant of his power to break anything; the Chilembwe may not do so, being without land. Neither may eat while walking. These two are always chiefs.

Clan names.—In Machila men's songs one hears a number of clan names repeated sometimes.

After sneezing people sometimes exclaim, "*Mwana wa* . . . .; *Mdzukulu wa* . . . .; *Kubale bwa* . . . ." (giving name of clan).

A man hearing another say this asks him, "Where do you come from?" He tells him, giving him names of his father and mother, etc.; if he does not know them he gives names of generations before.

The following are a few clan names:—

Achitolo, small rat.	*Achimaunde*, cloud.
Amamvula, rain.	*Amwali-mgwi*, hartebeeste.
Arimbiri, puff-adder.	*Ambiwi*, pig.
Achibalumbo.	*Ang'oni*, birds.
Achibalima.	*Achiombe*, fish.
Achinpemina, thunder.	*Achinasombe.*

MARRIAGE.

M 584 A man seeing a girl he would like to marry deputes his brother to go to the brother of the girl, who then calls the girl's maternal uncle, and he speaks to the mother on the subject. The mother consults the girl; if she refuse, nothing further is done. If she consents, the man calls his relations to come and be witness of his taking the girl as his wife; they meet in the *Bwala*. A house is assigned to the M 585 man in the village of the girl and there they go to live.

After six months the mother of the girl prepares beer. The uncles of the young couple, mothers, fathers, sisters, and brothers are invited. The girl's maternal uncle then speaks, addressing himself to the maternal uncle of the husband, saying, "We have called you here to drink beer and to see the house of your brother that you may return when you like. Should anything arise between these two newly married ones in the nature of a dispute, let them come to their respective uncles about the matter."

Then five pots of beer are drunk in the village, two are reserved for the witnesses to drink in the evening, and one for the two fathers and the headman.

11:Sanderson D-5 (ca. 1920) 1920 FT7 Yao FT7

408 It is becoming increasingly evident, however, that the law of succession is being avoided, not by extension of the number of marriageable relatives, but by laxity in the observance of the law itself. Nowadays the legal heir is never quite sure of his position, though, as a matter of fact, there is not now much competition for a position which, under European rule, is often exacting and yet unprofitable.

581 Moreover, owing to the abrogation of the drastic native laws regulating the sanctity of the marriage tie, marriages are becoming increasingly temporary in character. This is reflected in the system of relationship, as the relatives by marriage are becoming equally temporary.

1: Tew E-4 (no date) 1950 FT7 Yao FT7

every adult member is a matrilineal descendant of a single ancestress, or a spouse of one of these people. All husbands are called *alamu* by the male members of the descent group, but husbands call each other by the kinship terms for older and younger brother (i.e. *acimmemi* or *mpwanga*) according to the seniority of their wives. Similarly undifferentiated in kinship terms are the wives of all men of the descent group, who call each other 'sister'.

The husband is expected to work in his wife's garden, to help his mother-in-law, and also, in the early stages of marriage, to avoid her. His attitude to his father-in-law is one of respect, relaxing as time goes on. His attitude to his wife's brother is also one of respect, which covers feelings of latent hostility. Although husband and wife's brother co-operate in affairs relating to the woman and her children (e.g. they jointly consult the diviner in case of illness, and the brother-in-law hears grievances the husband may have against his wife), there are elements of conflict arising from their competition for the affection of the woman and her children.

Patrilocal marriages are the rule in certain cases. The village headman commonly has his wife in his own village. At his death his widow may return to her own village, but if her daughters have married locally she may stay, and one of her sons, as warden of his sisters, will also stay and marry patrilocally, as did his father, the headman. Thus a new matrilineal descent group, linked to that of the headman by a patrilineal link, develops. In every generation the number of separate but related matrilineal descent groups would double, and at such a rate of proliferation it might be expected that any village would contain many family groups. In fact, however, most members of a village can trace their descent from a common ancestress removed not more than about five generations. There are two reasons for this degree of homogeneity in the kin-grouping in the villages. One is that the villages tend to split up as they become too large and complex. The other is that the introduction of a new matrilineal descent group is often avoided by a cross-cousin marriage by the headman of the village or the warden of a sorority group.

There is a joking-relationship between cross-cousins, that is, for example, between the village headman's children and his sisters' children. The latter, as members of his descent group, have interests and loyalties opposed to those of his own children. Although there is a strong tradition of cross-cousin marriage, such marriages are said to be likely to be unstable.

Betrothal and Marriage

Child betrothal was common among the Yao. Acceptance of a loin-cloth and the wearing of it was token of betrothal, giving the groom exclusive rights over the girl.[1] The negotiations for an adult marriage are conducted by senior matrilineal kinsmen of the parties, who at the subsequent ceremony act as witnesses or sureties to the marriage. Usually the senior is the mother's brother, and the junior the brother. The act of validation, the *Cingoma* rite, takes place some time after the husband and wife have been living together. They meet in the hut of the woman for the rite, which consists in eating two pots of porridge, prepared by the female relatives of each party. The man's people bring a cockerel and the woman's a hen for relish. The exchange of food symbolizes the exchange of members of each matrilineal kin group, which is

[1] Macdonald, 1882, vol. i, p. 118; Johnston, 1897, pp. 412–13.

2: Mitchell E-5 (1946-1949) 1956 FT7 Yao FT7

622 *amilasi* is used for bamboos and once an informant when pressed
643 told me a tale of a group of people who in dire starvation ate
614 bamboo leaves and were thenceforth called after the bamboos. This story, however, was discredited by others and I pass it off as unimportant. There is, however, some evidence that the words *apiri amilasi*, *ambewe* and so on, are commonly used in Nyanja, and possibly amongst the Lakeside Tonga who were once part of the Marawi peoples, for objects other than clan-names.

614 Informants say that people with the same clan-name could not
502 marry in the past,[1] so that the clan appears to have had the characteristics of an exogamous descent group. The position to-day is vastly different. Not only do people take the clan-names of their fathers, but many young people do not even know their clan-names at all.

614 At this point I should make it clear that the modern confusion
611 about clan-names is no doubt partly due to the emphasis placed on patrilineal descent by the purveyors of White culture, the
567 Administrators and the Missionaries, and also by the same emphasis in Islamic tradition which has influenced most Yao groups. Another factor in the situation is that slave descent still markedly affects social relationships in modern Nyasaland. Its significance here is that when a man took a slave-wife in the old days, his children by her took his clan-name, and not hers. Patrilineal descent of the clan-name therefore tends to point to the slave origin of a person. People who are able to point to a freeman ancestry are proud of this fact and are proud to be able to claim a clan-name associated with a long line of matrilineal ancestors, particularly if there were some well-known men among them. On the other hand, I found it a fairly safe indication that, if I could find no information about an ancestress, particularly her clan-name, then I was dealing with a group descended from a slave. A third factor is that some people
614 explained their lack of knowledge of a clan-name by the state
611 of social unrest and confusion at the end of the last century. As a result of the incursions of the Ngoni, Nguru and slave-raiding Yao and Arab groups, and finally the punitive expeditions of the British and the Portuguese, villages were destroyed and groups annihilated. People lost contact with their relatives, even

[1] Confirmed by Hynde, R. S., 'Marriage and relationship among the Yao', *Nyasa News*, vii (1895), 217–18.

2: Mitchell E-5 (1946-1949) 1956 FT7 Yao FT7

593 brother, is called *anyene mbumba*, or 'the warden of the sorority-group'. As one would expect among a matrilineal people, the link between a man and his mother and sisters is strong. But it is the link with his sister that is strongest. She relies on him for protection, particularly when she becomes ill, but also in her [582] relationships with her husband. Her brother will be her junior marriage surety, and he will give the consent which will allow a man to marry her. Also a woman's brother will have to consult the diviner and find the medicines when she or her children [731] sicken. In times of distress, as, for example, if her crops have failed, she will appeal to her brother for help. Similarly the man is dependent on his sister in a number of subtle ways. He can always rely on her for hospitality, and is able to get a meal from her if he needs it. But his dependence on his sisters for prestige is much more important. The significance of this will emerge when we see the *mbumba* organization in the light of the segmentation and fission of the lineage. A man can only found a new village if he has the full support of his sisters. A sister also plays a most important rôle at the birth of his children. She represents him both at the first foetal-quickening ceremony and at the birth of his child, when she listens to the birth-pang confessions of his wife.[1]

At the same time the relations of sister and brother are restricted by custom. A man must never appear too familiar with his sister, especially in sexual matters. He may not, for example, [513] sleep in the same hut as she does; if she is away and he sleeps in her empty hut he must not make his bed in the place where she usually sleeps. He may not even sit on her sleeping mat. [835] Authentic cases of incest with a sister are extremely rare, whereas I recorded three or four cases of father-daughter incest while I was in the field. Supposed cases of brother-sister incest are recounted and discussed widely. This is understandable because [754] a man who is suspiciously familiar with his sister is suspected of being a sorcerer, since it is widely believed that a sorcerer usually obtains the power that he needs for the performance of his dire deeds by sleeping with his sister. The riddle of the initiands—'What is the sweetest fruit which may not be tasted?' Answer, 'Your sister'—neatly reflects the attitude of the Yao.

The close link of brother and sister is also reflected in the

[1] The significance of this is explained in Chap. VII, p. 185.

2: Mitchell E-5 (1946-1949) 1956 FT7 Yao FT7

It is difficult to over-emphasize the importance of the sorority-group in everyday life. There is hardly a social situation in which the relationships of a man to his dependent female matrilineal kin are not involved. Probably marriage is the most frequent context in which his duties to and responsibilities for his sorority-group emerge. When a man wishes to marry a woman, he must get the consent of her brother. Ideally, it is a woman's brother who gives the consent, and if one asks a Yao how he gets married to any particular woman he will answer immediately, 'You go to ask her brother.' When consent has been obtained the woman's brother seeks out the man's brother and formally meets him, thereby setting the public seal on the relationships between the man and the woman. This gives the husband particular rights over his wife and her activities. After this, the difficulties of any of the marriage partners are the concern of the two sponsoring relatives (*acinamangoswe*) whom I have called 'marriage sureties'. They meet to discuss the illnesses of either of the marriage partners or their children and try to settle the differences that arise in the married life of their wards. They must be consulted before the marriage can end, and in fact they perform the act that ends the marriage, i.e. one pays a nominal sum of say 2s. to the other.

According to the Yao, women are quite helpless in their relationships with others, in illness or in any court cases, and must always have a man to look after them. They are seen to be as dependent on him as children are upon their parents. A statement made to me by old Naliwa, a man who has been looking after a sorority-group for years, reflects this attitude of the men towards the women in their care.

These dependent women (*mbumba*) are as annoying as children to look after. They are *mlenci*[1] indeed. If a child is ill they go to tell their brother who says, 'Very well, I shall come to see the child.' If he is not very quick to do it they are likely to be backbiting. If he finds the child very ill he goes to tell the marriage sureties of its father, and they go to a diviner to look for medicine for the sick child. Then the sisters say that he is a good man because he gets on with the job when a person is ill.

Soon the child's mother becomes ill. Someone goes to tell her brother who says that he will come to see her. He visits her husband's

[1] Backbiting. See Chap. VI, pp. 137–8.

2: Mitchell E-5 (1946-1949) 1956 FT7 Yao FT7

583 the identification of alternate generations; and this is particularly
578 significant when we realize that the tension between the filial
561 and parental generations is most likely to find expression in the situation where a group of young adult women wish to leave a village, and their mother, if she is still alive, must make up her mind whether to stay or to follow them.

562 The existence of rules of succession for men, different from
613 those for women, presents an interesting analytical problem which
561 I have not yet fully explored. Clearly men must succeed to positions in the first ascending generation, for they are the active leaders in Yao society and those who are to succeed must be sufficiently mature to take over the responsibilities of leadership. Women, on the other hand, are usually not leaders so that succession to positions in the second ascending generation involves no difficulties. A young woman may take her mother's mother's name without involving any responsibilities of leadership. Yet the interaction of the two systems of succession presumably has some reaction on the social structure. A man's sister's daughter who succeeds to her mother's mother's position becomes the man's mother and the man's mother's brother's sister. The man's own sister becomes his mother's brother's mother.[1] The effect of this presumably is to achieve some balance of power between a man and his mother's brother. By the rule of succession for women, a man's sister to whom he is tied by the closest possible ties of kinship, and on whom he is dependent for political success, becomes his mother's brother's mother, so forming a common link between two potentially opposed persons. By the same reasoning a man's sister's daughter who is part of his sorority-group and who is likely to desert her mother's mother's brother to go with her mother's brother if there is a conflict, by succession becomes the sister of her mother's brother's mother's brother, so forming a unifying influence within the lineage. This problem emerged after my fieldwork was completed so that I have no evidence to support these suggestions.

613 Among the men, because of the struggle for political power,
561 the opposition of alternate generations is much stronger than
582 among women. This emerges most clearly in the institution of marriage sureties.

The duties of the marriage sureties towards their wards are

[1] I am grateful to Prof. Gluckman who pointed this out to me.

2: Mitchell E-5 (1946-1949) 1956 FT7 Yao FT7

part of the normal duties of a matrilineage leader to his kinsmen.[1] 613
But ideally each marriage is supposed to have two marriage
sureties. The first, or senior, surety is called *mkokowogona*, which 561
was described to me as 'the log that lies at the doorway'. The 582
picture here is of a wise old man who cannot move around too easily, but who sits at the doorway of his hut ready to give advice and information to his younger kinsmen. In contrast to this is the junior surety. He is called *mkupamame* or the 'beater down of dew'. He is pictured as a young man, who is vigorous about his daily tasks and who is waiting before the dew has evaporated in the morning, at the door of couples who have difficulties. He is essentially the 'one who walks about'.

The senior marriage surety is ideally supposed to be a mother's 613
brother, while the junior marriage surety is supposed to be a 561
brother. In fact, while the junior marriage surety is almost 582
always a brother, though not necessarily an elder brother, the 604
senior, for reasons which will emerge later, is frequently not a mother's brother. However, in the Yao mind the two are fixed in the relationship to each other as mother's brother and sister's son. The fundamental conflict of their positions is expressed by the opposition of the concepts of the 'recumbent log' and the 'active man'. This view is consistent with the segmentation and internal differentiation that must go on within a lineage. As the segments of the matrilineage become progressively independent of each other, the senior relatives, who formerly held them together, become less and less active in their affairs. In Yao idiom they become 'recumbent logs'.

The relationship between mother's brother and sister's son 604
therefore is fundamentally ambivalent. By the values surrounding the concepts of descent and relationship, a sister's son and 627
mother's brother are close kin and bound together in their attachment to a common ancestry and to a common set of living women who are in their joint care. At the same time the mother's brother, belonging as he does to the parental generation, must be respected by his sister's sons. Recalcitrant sister's sons may be made to toe the line by a number of different sanctions. A mother's brother, for example, may take his case to an arbitrator and bring the force of public opinion to bear upon his

[1] I have described the rôles of the marriage sureties more fully in *Marriage among the Machinga Yao*.

2: Mitchell E-5 (1946-1949) 1956 FT7 Yao FT7

593 economic responsibility of all the woman's children regardless
586 of whether he has begotten them or not. For example, gossips say that a woman married my clerk so that she could have her son initiated. The costs and fees for this boy's initiation amounted to over a pound.

593 The other set of rights that paternal recognition confers on
602 the child are the moral rights against his paternal kinsmen. A person may turn to his 'father's people' (*kucitati*) in times of dire need, especially if one of them is rich. This right persists after divorce, though the children are adult and otherwise economically independent. For example, a woman who was married to a labour migrant needed clothes badly. She turned to Chiwalo her father, though he had been divorced from her mother for more than 15 years. People in trouble often run away to their father's village and find shelter there. A man who wanted medicine for success in gambling asked his father for it. Another who had broken a sexual taboo confessed to his father who found suitable medicine for him. In each of those relationships there was an intimate personal element.[1] A person has the moral right to appeal to his father or paternal kinsmen, but he has no legally enforceable right to demand help. He has to rely on their kindness and charity. There are few fathers who would deny their children's requests if they are reasonable, but they can if they wish to.

582 The divorce rate is high among the Yao [2] and a typical family
586 of five uterine siblings may have three fathers. Furthermore, a man should not marry into the lineage segment where his brother
613 has married, so that the patrilateral kinship ties of the members of matrilineages tend to spread widely in the vicinity of the village. The effect of this is that the members of the lineage as a whole have widespread connections with neighbours upon whom they may rely in times of distress. But of the individual members of the matrilineage only a few share the same group

[1] Compare Fortes's description of uterine kinship among the Tallensi: '[It] is essentially by a personal bond, a bond of mutual interest and concern uniting individual to individual', *The Web of Kinship*, 37.

[2] Eight of every ten men and women over the age of 40 have experienced a divorce at some time of their lives. Excluding the contingency of death a married couple have only 30 chances in 100 of living together for 20 years. For details, see *Marriage among the Machinga Yao*.

2: Mitchell E-5 (1946-1949) 1956 FT7 Yao FT7

 582

of patrilateral kinsmen, so that these bonds are personal and distinctive for each member. 586 613

The Development of the Corporate Identity of Patrilaterally-linked Groups

The parent-child relationship is reflected in the structural relationships of a patrilateral group to the dominant matrilineage. 591 593 Children are less strongly tied to their father than to their matrilineal kinsmen. Usually when a woman dies or is divorced while living virilocally, her children return to her matrilineal village. If the children are too young to express their own wishes, their mother's brother comes for them and they are formally returned to their village of origin. Occasionally children who have grown up in their father's village, especially if they have married their cross-cousins there, refuse to move back to their matrilineal village. They prefer to remain in their father's matrilineal village where they know people more intimately. In time, as they grow older, the women have daughters who may marry uxorilocally and thus a section of a foreign matrilineage begins to develop in the village.

The village as a social unit is more closely integrated when the children who are living there with their father are still young. 593 613 They do not yet form a corporate group within the village. 621 Their affairs are supposed to be controlled by their mother's brother, but in fact the headman, who is usually their father or a paternal kinsman, may settle many of their minor difficulties and find medicine for lesser illnesses, without bothering their mother's brother. When the children become adults and begin to assert their own wills the position in the village becomes more unstable. As the daughters grow up and marry, their brothers become their junior marriage sureties. If the mother's brother lives far away, the father of the children may be the senior marriage surety. He still has a personal attachment to his children, but his sons' relationships with him may now become affected by structural elements as they tend to interact, with him and others, in certain situations as representatives of corporate groups. As the village develops a son takes over the position of senior marriage surety to the headman's wife's descendants and he becomes the senior male lineage member, while his sisters' sons begin to take over responsibilities for their sorority-groups.

2: Mitchell E-5 (1946-1949) 1956 FT7 Yao FT7

613 621 sections of a matrilineage, and accordingly the huts of members of the dominant matrilineage are physically separated more distinctly from the huts of members of the patrilaterally-linked groups than from one another. As they develop their corporate identity the members of each matrilineage tend to build together and a little distance away from the main settlement of the other matrilineages. In Cikoja's village this tendency is seen quite plainly. There are two large patrilaterally-linked groups in the village. These are the children and matrilineal descendants of Cikoja IV's second wife (represented in the plan as N), and the children and matrilineal descendants of the first wife of Maperera, the brother of Cikoja V (represented in the plan as O). These two groups are situated quite separately from the main matrilineal block of the village. The huts of X matrilineage are hidden from the view of the rest of the village and must be reached by a path. The space between huts of O matrilineage and the remainder of the matrilineal block is clear, but in it there are some large trees and the grave of Cikoja V. The huts of the three women and the one man of N matrilineage are close together in the village but scarcely distinguishable from the huts of the main matrilineage. The huts of two women of Y matrilineage are set on the extremity of the village and are not yet separated from the huts of other lineages. Note how the huts of the villagers who have married their 'cross-cousins' are placed within the village as a whole. Huts 32 and 33 belonging to the two women of X lineage have been placed between the main block of the X matrilineage and the matrilineage of Jauma (Ma_1), who is married to one of these women. Huts 10 and 11, where members of the dominant matrilineage and the patrilaterally-linked lineage N have intermarried, are placed on the mutual fringe of these two groups. The three men of the patrilaterally-linked lineage X who are married into the dominant lineage form a little block in the north-western corner of the village. As soon as the patrilaterally-linked groups develop their identity and are able to express their autonomy, they tend to build in separate sections and to form corporate but component parts of the village.

613 582 One of the clearest ways in which the autonomy of the matrilineage is expressed is in the arrangements made about marriage sureties. In Cikoja's village, Cikoja himself is senior

2: Mitchell E-5 (1946-1949) 1956 FT7 Yao FT7

marriage surety for only one member of the linked lineages. This is Naliwa (D39), who is the oldest surviving man in all the linked matrilineages and who is looked upon as the senior among them all. Naliwa is the senior marriage surety for most of the marriages in the linked matrilineages, but Katoli (D33) has taken over the duties for a number of his own lineage members. Table XXVIII lists the senior marriage sureties in all the

TABLE XXVIII

SENIOR MARRIAGE SURETIES IN CIKOJA VILLAGE

Surety	Rel.*	Lineage Affiliation						Total
		Mat.	Z	X	Y	N	O	
Cikoja . . .	Mat.	44	—	—	1	—	—	45
Naliwa . . .	Y	—	—	—	5	8	13	26
Katoli	X	—	3	12	—	—	—	15
Mbwana . . .	X	—	1	2	—	—	—	3
Suwedi . . .	X	—	—	1	—	—	—	1
Other† . . .	—	1	—	—	—	—	—	1
Total . . .	—	45	4	15	6	8	13	91

* This is the lineage affiliation of the senior marriage surety. Cikoja is the headman and automatically senior lineage member. Naliwa is the most senior surviving member of Y lineage. Suwedi is most senior in X, followed by his younger brother Mbwana and then his sister's son Katoli.

† This is Cikoja's own marriage. His perpetual younger brother Mbande is his senior surety.

Note: There were two marriages in P lineage for which I did not record the marriage sureties.

marriages I recorded in Cikoja village. Here, age is important. The male members in the lineage of Cikoja V's wife and of Maperera's wives are all much younger than the members of Cikoja IV's wives' lineages. The descendants of Cikoja V's wife and of Maperera's wives all have junior sureties from their own lineage, but so far none has become a senior marriage surety.

As time goes on, the affairs of the linked lineage, therefore, become regulated more and more within the lineage. The headman and perpetual father recedes from the picture but is never entirely obliterated even in his relation to a linked-matrilineage which moves out to found its own village.

2: Mitchell E-5 (1946-1949) 1956 FT7 Yao FT7

when I visited it in 1947.[1] The basic structure of this village is set out in Diagram 5. Here the headman[2] was the last surviving member of the dominant matrilineage. The founder of the village, his mother's brother, had thirteen slave concubines. Some of these were barren but others produced children to give this complex structure. In this village the 55 huts were arranged in 16 different affiliations. The details are set out in Table XXIX. These groups were held together by Mpumbe IV, old, blind and doddering as he was. The virtual leader of the village was his elder brother's son, a man in his late forties or early fifties. When Mpumbe died, late in 1948, the people said that it was because of the sorcery of his brother's son who wished to take over the name of the village. This led to a dispute, which ended in the brother's son's leaving to found a new village about 15 miles away. A distant sister's son, as I have said, succeeded to the headmanship, and the reduced village was reunited under this new leader. 567 613 621

However, this is an extremely unusual type of village as most villages, if they are not simple matrilineal groups, have only one patrilaterally-linked group living with them. The reasons for this are firstly, that if patrilaterally-linked matrilineages develop at all in the modern villages, they move out very soon after the death of their progenitor, and, secondly, that there are very few of the old slave-raiders' villages left intact.

Cross-cousin and Other Kinds of Intra-village Marriages 582

A most important factor in the welding of patrilaterally-linked groups to the dominant matrilineage is marriage. The tradition of cross-cousin marriage is very strong among the Yao. A person may marry either type of cross-cousin but in practice preference is given to a father's sister's daughter—i.e. the woman is married to her mother's brother's son. There is a special term for cross-cousins, *asiwani*, which is used by either male or female talking to either sex. Between cross-cousins, especially cross-sexually, there is a joking-relationship which may vary all the way from ribald joking to sexual advances. Some of my male informants say that sexual intercourse may take place between cross-cousins 601 605

[1] See also Chap. VI, p. 161, and Chap. III, p. 59.

[2] He died late in 1948 and was succeeded by a distant 'sister's son' from the village of his perpetual son, Ngongondo.

[Text continues on p. 199]

2: Mitchell E-5 (1946-1949) 1956 FT7 Yao FT7

'if the women are stupid enough to allow it'. The kinship terminology is consistent with the assumption that every man marries his cross-cousin, except that the father's sister's husband is not called 'father-in-law', but 'father'. The mother's brother's wife is called *akwegwe* (parent-in-law). The husband of a cross-cousin is called *mpwao* (younger brother), on the reasoning that if a man does not marry his cross-cousin, then his younger brother will. Dr. Meredith Sanderson told me that it was once the custom for a man to ask a prospective wife's cross-cousin before he proposed marriage because it was assumed that the woman's cross-cousin had first right to her hand. As far as I could ascertain this politeness is no longer observed.

The children of cross-cousins are called 'my children'. In addition to this a person calls his mother's mother's brother's son or mother's father's sister's son, 'father', and his mother's mother's brother's daughter or mother's father's sister's daughter, 'female father', a term which he applies also to his father's sister.

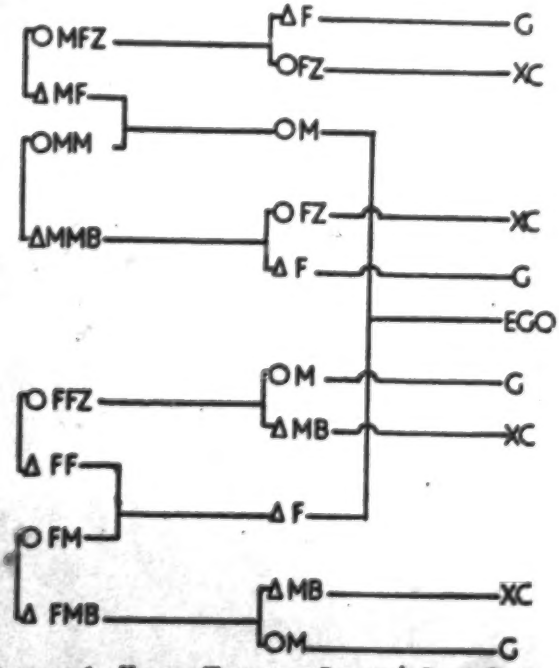

DIAGRAM 6. KINSHIP TERMS FOR PARENTS' CROSS-COUSINS.

2: Mitchell E-5 (1946-1949) 1956 FT7 Yao FT7

601 A person calls his father's mother's brother's daughter and father's
605 father's sister's daughter, 'mother'; his father's mother's brother's son or his father's father's sister's son, 'mother's brother'. Diagram 6 illustrates this. This is consistent with the assumption that each parent has married his cross-cousin.

582 Conversation with informants gives the impression that cross-cousin marriages are very common. They say, for example, that every man's first marriage ought to be to his cross-cousin. But in fact, of 103 first marriages, only 15 per cent were to real or classificatory cross-cousins, though 21 per cent were to other types of kinsmen. Marriages to other types of kinsmen are loosely called cross-cousin marriages, and often what has been called a cross-cousin marriage in conversation turns out to be marriage to a cross-cousin's daughter or something similar. This may be the reason why casual conversation leads one to imagine that cross-cousin marriage is so frequent.

601 But cross-cousinship is particularly significant when seen in
605 relation to village structure. Typically, villages, if they are not built around a simple matrilineage, are composed of a dominant
613 matrilineage and one or more lineages linked patrilaterally to it. Sometimes there are groups in a village which are connected by a patrilateral link to a matrilineage which is in turn linked patrilaterally to the dominant lineage. In other words, there are some lineages connected by a double patrilateral link to the dominant lineage. But this is not common. These linked groups have arisen because one or more of the men of the dominant lineage have brought their wives to live in their village. The set of kinship terms applied to members of the linked lineage by members of the dominant lineage are shown in Diagram 7. We have already seen that Ego, whether man or woman, calls his or her mother's mother's brother's son or daughter 'father' or 'female father'. This usage is consistent with the assumption that one's mother ought to have married her mother's brother's son so that the mother's maternal uncle's son should be called 'father'. On the same reasoning, one's mother's mother's brother's daughter should be one's father's sister and the appropriate term 'female father' is accordingly applied. Because uxorilocal marriage is the custom, Ego's mother's mother's brother's son marries out of the village and his children belong to another lineage. The children of Ego's mother's mother's

2: Mitchell E-5 (1946-1949) 1956 FT7 Yao FT7

in a joking-relationship which is more intense between men and women. Men and women in Yao public life always behave distantly to each other; hence joking-relationships are most intense between male and female cross-cousins. The joking-relationships between cross-cousins of the same sex is much more subdued and limited. The village headman himself, if he is not the actual father of the cross-cousins, is likely to be the butt of most of this. His visits to the huts of his cross-cousins to give them irksome instructions is an especial occasion for this sort of joking. Cikoja ordered his female cross-cousins to sweep a site for my tent when I first went to his village. I was most embarrassed by the insults that were hurled at his head during this procedure, but he took it all calmly and said nothing. The hostility inherent in the headman–villager relationship, together with the opposition between the dominant matrilineage and the patrilaterally-linked groups, provided an opportunity *par excellence* for joking. Thus the joking between cross-cousins in the village context is a means whereby the hostility between the component groups is dissipated and the harmony within the village maintained.

The groups are, of course, welded more closely by cross-cousin marriages which are not only allowed but prescribed. By cross-cousin marriage a man from one of the component groups of the village may marry and yet not leave the village. He may in fact have to build a hut in another part of the village, but this is obviously not the separation that uxorilocal marriage entails. At the same time, in a village where the headmen have married their cross-cousins, there will be fewer patrilaterally-linked groups, so that the village will be less complex and consequently less liable to internal dissension. If cross-cousin marriages were not practised, and if the children of the headmen and senior members of the linked lineages did not return to their matrilineal villages on the death of one of their parents, the intra-village situation could in time become extremely complex. Assuming that each linked group had at least one male member married virilocally, the number of related groups would double itself in each generation.[1] However, because of limiting economic factors I describe later and the disruptive social processes within villages, this situation never occurs in practice, and Yao villages on the whole remain relatively simple in structure.

[1] See detailed argument and diagram in *Seven Tribes*, 333.

3: Stannus D-5 (ca. 1912) 1922 FT7 Yao FT7

585 drum of her married life begins. The man and woman live together peaceably enough as
462 a rule, each attending to his own sphere of work. The man builds the house, the woman
made the floors; she sweeps and cooks, she is the hewer of wood and drawer of water. The
man hunts, fishes, makes mats, baskets, the grain store, game traps, and bark-cloth; he
looks after the tobacco, and makes the snuff, while his wife brews the beer. He it is who
fashions the gourd vessels and carves the spoons, while the woman is the potter (Pl. III, 4)
and pipe-maker. Together they hoe and together they harvest, but to the woman falls the
monotonous drudgery of pounding and sifting the corn for flour.

842 The Yao have a custom like that of the Anyanja. A sister brings to the house of the
newly wedded pair a log of green wood from a *mbanga* tree which is very hard; the log
[522] may be two feet in diameter and four feet long. Should the bride not become pregnant
before it is burned away, the husband is laughed at and they may both be teased by having
[558] many logs brought to the house. A man who has no children is much despised and there
is a saying, "He must have eaten some ground-nuts," punning on the word for a thick-
skinned variety of ground-nut, *chimbuwila*, a word which also means sterility. An impotent
[837] man may, with the consent of his wife, introduce some male friend into the house, any
children born in consequence being claimed as the husband's. He usually chooses some
friend from a distance to obviate any attachment springing up between him and the wife.
Two married couples may, all consenting, exchange consorts for the night, but they never
live together like this for long periods.

582 There is one well-defined marriage taboo; a man may not marry a woman of his own
clan. In the old days, he was also restricted to his own tribe, except in the case of slave
[611] wives and wives by capture. Since the clan is inherited from the mother,[1] a man may not
marry the daughters of his maternal aunts, but he may marry his other female cousins.
[587] He may not marry two sisters nor a deceased wife's sister; neither do two brothers marry
two sisters.

595 The number of wives is limited only by the husband's ability to provide for them. In
addition to free wives, a man might formerly have a number of slave wives. The head wife
is called *kusyeto*, the other wives, *mangumbo*. The word given by Macdonald, *akusyeto*,[2]
meaning the junior wives, is a Chinyanja word and, I think, wrongly applied.

582 It has been said that a man always marries into the village of his wife. For this reason,
[842] female children are always prized as it means an increase in the number of able-bodied
men added to the village. In rare cases, the wife might be taken to the husband's village,
[583] as is the Anyanja practice.[3] This, of course, is true in the case of chiefs and headmen. Here,
we may also note that no payment is made for the wife and no dowry is received with her.

584 To revert to betrothal, occasionally the sponsors will not agree to the marriage and a
843 runaway match takes place, but in the end, the marriage is usually regularised by the
sponsors coming to an agreement. If, however, the woman has in the meantime become

[1] Vide infra, p. 282. [2] Op. cit., p. 134. [3] Stannus, op. cit., p. 309.

3: Stannus D-5 (ca. 1912) 1922 FT7 Yao FT7

567 Slavery. Slaves were acquired by capture or purchase, or were received as payment. Prisoners taken by the vassals of one chief in a fight with the partisans of another chief became slaves. Slave raids were also made by the Wayao upon the weaker Anyanja or again expeditions were sent out hundreds of miles away into the Chipeta country to buy slaves.

[422] Slaves were a man's goods and chattels, to do with mainly as he pleased, but no man might kill a slave without bringing the case before his chief and obtaining consent. While some were bought and sold and sometimes found their way into a slave caravan bound for the coast, many, perhaps the majority, lived the life of ordinary individuals in the villages. A man who was unhappy in a village and wished to escape from his vassaldom might run away to another village and there commit some act so that he might be claimed as a slave. The custom was to go to the village and sit by the site of a house which had been pulled down after the death of the occupant, and the saying is, "He has been called by the dead man's spirit."

[554] Many a slave has become an important man in the village and slaves were often the trusted advisers of their chiefs, but there was no means of becoming a freeman. Neither a slave himself nor a second party could purchase his freedom. A slave capturing another man in warfare, for instance, could not ask for his own freedom in exchange for his captive, but anyone so taken became, in a way, the slave of a slave, and the master could not sell the second slave without the permission of the slave captor. An old slave might often be allowed to do just as he pleased and to all intents and purposes was a free man, but he was never actually freed. A slave might earn a return for work done for others than his master; part of this he would probably give to his master, but there was no regular tax upon such earnings.

The idea in accumulating slaves seems to have been to increase the population of the villages and hence their power and progeny. This is borne out by the fact that marriage [582] between free men and slaves was allowed. Marriage between a free man and a slave woman was unaccompanied by any ceremony and was therefore rather in the nature of recognised concubinage. Such a wife, if unsatisfactory, could be sold out of the village, but generally she was well treated. The children of two slaves were of course born into slavery; the children of a slave woman by a freeman husband, were not quite emancipated, as the father could not remove the child from the village of the slave mother's master, and in very extreme cases, it might be sold by him.

Women might marry slave husbands and often a master married his daughters to his slave men whom he thought well of. This amounted to a guarantee to the slave that he [421] would never be parted with. A woman with a slave husband could not leave him informally; she could not sell him, inasmuch as women have no property.

648 423 Land Ownership. The ownership of all land was vested in the chief, but he appeared to hold it in surety for all the people over which he ruled. Headmen had no land rights.

593 The children of maternal uncles (C 6 and 8) and of paternal aunts (C 2 and 4) are
601 called cousins *achaimumi* (sing. *mwimumi*), and, conversely, the children of maternal aunts (C 7 and 9) and of paternal uncles (C 1 and 3) are called "brothers and sisters"; one would address the other as "*chamunki*" or "*achimunse*," but either is *mbuko* to the other.

601 It is interesting, therefore, to note that cousinship is of two kinds: the relationship
605 between a child and his maternal aunts' children or his paternal uncles' children is *mwuko*, whereas the relationship with his maternal uncles' children or his paternal aunts' children is *mimumi*.

It is easily understood why the maternal aunts' children are considered as brothers and
[611] sisters, as among the Yao, matrilineal descent is the rule, the children taking the clan of

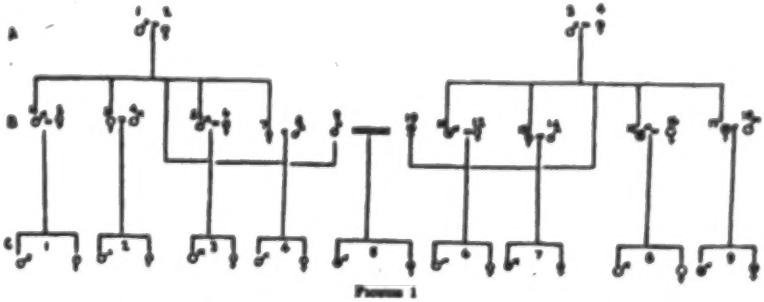

FIGURE 1

the mother. In the diagram, this is indicated in black. That the paternal uncles' children bear the same relationship would seem to indicate that matrilineal descent is not absolute but that dual descent from both parents is recognized.

Children C 5 may not marry C 7 and 9, nor C 1 and 3. In the case of the former, this is because persons of the same clan may not marry, but in the case of the latter, no such reason is given but they are simply said to be brothers and sisters. Children C 5 may
[582] marry their cousins C 6 and 8 and C 2 and 4, but this is not very common as it is said such marriages are always unhappy.

601 The wife of a maternal uncle (B 12) speaks of her nephew by marriage (C 5) as *mawa*,
604 husband, because, in the event of her husband's death, this nephew would inherit from him and he might marry the widow.

601 A parent-in-law or child-in-law is called *mkwapwe* indifferently. Paternal and maternal grand-parents, and great-uncles and aunts are all called *ambuje;* a grand-child, *chizukulu*.

The words *atati* and *amae* commonly mean father and mother, but, as given above, there are other words for these two parents, whereas *atati* and *amae* are applied to certain aunts

5: Mitchell E-5 (1946-1948) 1949 FT7 Yao FT7

ship. The difficulties of his position are brought home to the neophyte village headman in speeches made by old and experienced men. On one such occasion I heard a man say, 'Some men who marry into a village are bad and can split a village like this one by telling lies to the headman, saying that his sisters are talking behind his back and are insulting him. When a headman hears all this he might break his village by ill-treating his relatives, thus causing himself to be left all alone.' In this way the headman's responsibility for maintaining harmonious relations between the members of the village and himself is emphasized. His failure to do so results in what they call a break in the village—the departure of some of the members to live elsewhere—which is a severe blow to the status of the headman. In fact, he is dependent on his dependants for status, and the Yao are quick to point this out to neophyte headmen, saying, 'A tree cannot grow without branches.'

We can better understand the situation if we consider the social structure of the Yao village a little more closely. The Yao are a matrilineal people and are dominantly matrilocal. They live in small groups of huts scattered fairly evenly over the country and from a few hundred yards to possibly a mile or so apart. Such clusters may contain as few as five or as many as sixty or more huts, occupied by between 20 and 200 people.

These people are almost always kinsfolk, and in the smaller villages they are usually all either matrilineal descendants of a common ancestress or their spouses. In the larger groups there is a more complex situation which I shall analyse below. In the simpler groups there may be no male matrilineal descendant in the village and the leadership of the group is taken over by a senior female descendant of the founder of the village. Usually, however, if the group is large, one of the male matrilineal descendants lives patrilocally in the village and assumes leadership.

The relationship between a male matrilineal descendant and the female matrilineal descendants who are in his charge is signified by the word '*mbumba*'. The word particularly refers to the relationship between a man and his sisters and I have therefore translated it as 'sorority-group'. It includes a man's full sisters, matrilineal female collaterals (whom he calls sisters), their female children, and the female children of those female children, and so on. It is usually used in the sense of 'somebody's sorority-group'. A man belonging to the descent-group of the sorority-group may refer to these women as 'our sorority-group'. The man who is in charge of the sorority-group is referred to as the *ayum mbumba*. This could be translated as 'owner of the sorority-group' but because of the property associations with the word 'owner' in our language, I have instead translated this as 'warden of the sorority-group' which expresses more accurately the relationship between a man and his female relatives. Even in those groups where there is a female in charge of the village and no male matrilineal descendant is resident in the group, there is usually some one man, possibly married in some other village, who is warden of the sorority-group. The warden of a sorority-group has certain precise duties to perform on behalf of his charges. First, he is concerned with the good relations between members of the sorority-group and with other such groups. He has to settle most of the domestic quarrels that take place between members of the sorority-groups. Second, and this is considered to be a most important function, he is the person who is the

marriage-surety for the marriages of the members of the group. Briefly this means that he must be approached before a marriage can be legally contracted by any member of his charge, he or his representative is present at the ceremony which formally announces the marriage, and he is responsible for the behaviour of his female relative in that marriage. Third, he is immediately concerned with the physical welfare and health of his sorority-group. He must track down the sorcerers causing their illnesses and supply the medicine to heal them. He has to arrange for the ritual purification of mourners after the death of one of the sorority-group's members. Fourth, he must be present in the court-house if one of his charges is involved in a case and he is usually looked to for the money for the fine. I have known a case not to begin because the warden of the sorority-group was not present. Frequently if the husbands of the female members of his charge default, he has to provide the hut-tax money.

Usually the warden of the sorority-group is the eldest brother of a group of adult full sisters. The younger brothers of the group of sisters, while concerned with their welfare, do not stand in this particular responsible position. They refer to the sorority-group as ' our sorority-group '. The elder brother refers to the sorority-group, be it noted, as ' my sorority-group ', and this sets him over and against his younger brothers. The position that the warden holds, however, is not rigidly fixed, for a younger brother may assume control of the sorority-group if for some reason he is dissatisfied with the way in which affairs are being conducted, and is able so to assert himself.

If we recall that the status of a man in a Yao community is determined by the number of dependants that he can command, it is easy to see that relationships between an elder brother and his younger brother are distinctive. The elder brother is responsible for the actions of his younger brother in much the same way as he is for one of his sorority-group, and the younger brothers have a great emotional attachment to their older brothers. Yet at the same time the elder brother stands in the way of the younger brother in his striving for status, in that while the elder brother is warden of the sorority-group the younger brother cannot be, and therefore cannot have dependants and status. It is not surprising to find that accusations of sorcery are frequently made between brothers and the result often is that the younger brother takes the sorority-group away from his sorcerer brother to some other place and sets up a new village with it. Therefore, one possible source of instability in a Yao village lies in the operation of the kinship system in a system of values which reckons status by adherents.

I have thus far been describing the simpler types of village. In the larger groups it is common for the warden of the sorority-group to live in the village where his sorority-group is. Then he usually brings one (or sometimes more) of his wives to the village, where she lives patrilocally. The daughters that are born to her do not return to the sorority-group from which the headman's wife came but marry and set up households near their mother in the village of their father. Thus there develops in time a second sorority-group in the village, alongside the first sorority-group, and related to it through the headman. At this point we may say that the man's position has changed from that of headman of a village containing a single sorority-group, to the more complicated and less secure one of village headman over a more hetero-

6: Mitchell E-5 (1946-1947) 1949 FT7 Yao FT7

121 impressed on people's memories and remembered by most of the people. Thus it
125 was desirable to find a useful reference date between 1930 and 1940. It might be thought that the death of King George V would be memorable. However, though all who were old enough at the time could remember the witchfinders, only a few could remember the death of King George.

125 This skeleton chronology was filled in by events of more local significance. For example, Kawinga's brick house was built in 1929, the present Nyambi succeeded in 1933, &c. In addition, in particular hamlets there were men who had been in the Army, or had been to work in South Africa or Southern Rhodesia. Usually they could recall the date of going and sometimes of return, though they may have lost count of the intervening years. Such dates were often useful points. A small minority had actually recorded the dates of birth and death of children.

In addition to this, it was possible to fix the ages of the young children by reference
805 to harvests, since the Yao reckon two years in retrospect, 'last year' meaning before the last harvest and 'the year before last' meaning the period before the harvest before last. Before the year before last, all time is merely *kale-kale*, the only indication of the period being the pitch of the voice in which it is said or the presence or absence of an exclamatory 'E!' before speaking.

125 Particular care was taken to secure the ages of women and the dates at which they had borne children. There was, as mentioned above, some reticence in mention-
[124] ing the names of dead children, but this was usually met successfully by questioning the women's male relatives who were generally more communicative on these points.
[128] In spite of the care taken to obtain this information, it was impossible to fix the ages of six women in the sample, and they have been excluded from the major part of the analysis. In addition, there were thirty-nine men who were not available for questioning. These were all adults, the husbands of women in the hamlets. The
105 Yao are matrilineal and matrilocal, and men tend to spend much of their time away from the hamlet of their relatives-in-law. Since they are in many ways strangers in the hamlets no information could be obtained about them.

2. The General Background to Fertility

All the hamlets visited were occupied by members of the Yao tribe. The Yao are an Islamised people who achieved the questionable distinction of being efficient slave raiders at the end of the nineteenth century. They are a matrilineal and pre-
[361] dominantly matrilocal people living in hamlets of from about 5 to 100 huts or more.

Table I. *Age of Women at First Marriage*

[582]

Present age of women	Age of women at first marriage											Total	Median age at first Marriage
	7½–10	10–12½	12½–15	15–17½	17½–20	20–22½	22½–25	25–27½	27½–30	30–32½	Over 32½		
Under 30	3	6	3	18	9	4	3	3	..	..	..	53	16·7
30–45	4	6	7	11	4	4	2	3	..	1	3	45	16·3
Over 45	..	2	1	5	8	3	1	2	..	1	..	23	18·6
Totals	7	14	13	34	21	11	8	8	..	2	3	121	17·0

6: Mitchell E-5 (1946-1947) 1949 FT7 Yao FT7

They are semi-subsistence cultivators who own no cattle and whose diet is therefore largely vegetarian, viz. sorghum and maize-meal with ground-nuts and beans and certain leaves together with a small quantity of cassava roots. 105

Marriages are contracted early in life with little difficulty and ceremony. Formerly girls were espoused as mere children, and this still happens, but whether the custom is falling away or not I could not check quantitatively because the memories of the old women who had been married as children forty or fifty years ago could not be relied upon. Table I shows the ages at first marriage for a sample of 121 married women for whom this information was available. 582

Where marriage takes place so early we can expect that the mean age when child-bearing commences will also be early. Table II shows the median age of mothers at the birth of their first child. 163

TABLE II. *Age of Mother at Birth of First child*

Present age-groups of mothers	*Age of mother at birth of first child*									*Total*	*Median age at birth of first child*
	12½–15	*15–17*	*17½–20*	*20–22½*	*22½–25*	*25–27½*	*27½–30*	*30–32½*	*Over 32½*		
Under 30	9	26	12	17	6	4	..	..	..	74	17·9
30–45	10	14	10	9	4	7	3	4	3	66	19·8
Over 45	5	7	9	9	3	6	1	3	1	46	20·6
Totals	24	47	31	35	13	17	6	7	4	186	19·3

From these two tables it is clear that nearly all women in the community are married early and that child-bearing commences very soon after marriage.

Table III shows the conjugal status of all women over the age of 15. 162

TABLE III. *Conjugal Status of all Women over the Age of 15*

Present age-groups	*Never married*	*Wives of*			*Divorcees*	*Widows*	*Total*
		Monogamists	*Polygamists*	*Labour migrants*			
Under 20	25	15	3	4	..	..	45
20–30	3	37	18	9	9	3	79
30–45	1	31	19	5	9	3	70
Over 45	..	14	10	1	11	16	52
Total	27	97	50	19	29	24	246

Here we see that of all women under 45 (194), 141 (73 per cent.) are married, though only 83 (43 per cent.), i.e. the wives of monogynists, have their husbands living permanently with them. Another 40 (20 per cent.) were married to men who were married to other wives, so that while their husbands were not living with them permanently they were nevertheless with them periodically. Eighteen other women (9 per cent.) were married to men who had left to work outside the area and hence were not living with their wives at all at the time of the survey. Visits by men to places of work outside the area may last 2 years or more. It should [595] [591] [167]

101 Amusinings in the Mukanjila area of Fort Johnston District, i.e. to the east of the south end of
619 the Lake near Fort Maguire. These two divisions
175 are insignificant when compared with the other two divisions in Nyasaland. The third division
643 is the Mangoce Yao now settled around Blantyre, while the last division, the Macings, are settled between Fort Johnston district and Zomba. These divisions arose from a breaking up of the Yao tribe which originally occupied the territory between the Rovuma and Lujenda Rivers in what is now Portuguese East Africa. These divisions are not very significant to-day. Members of a division recognize that they are more closely related to each other than to the members of another division, but this does not appear to affect modern political life in any way.

619 The first Kawinga, Liwonde and Nkata[1]
175 all belonged to the Macinga division which had settled near the tip of Lake Amaramba where it
551 empties into the Lujenda River. From this place
643 of origin, the groups associated with these early leaders moved into Nyasaland. In addition to belonging to the same division of the Yao tribe the three leaders mentioned also had the same clan-name, viz. [illegible].[2] The term that I have translated as clan-name is the Yao word *lukoya*, which may also be translated as "kind" or "sort". Thus, if one asks a man the "kind" or "sort" of Yao he is, his answer may refer to the major divisions as above, i.e. Macinga or Mangoce or it may refer to the clan-name. Clan-names are inherited matrilineally, but holders of the same name are unable to trace their descent from a common ancestor. People with the same clan-
• [512] names formerly did not marry but this prohibition has fallen away. For the commoners the clan-name seems to have lost most of its significance but it is carefully remembered in the royal lines and lines in which the rank of a village headman is passed down.

643 The present Kawinga and the present Liwonde
551 can trace their descent matrilineally from a com-
175

9-Lawson T-1 (ca. 1940)1949 FT7 Tao FT7
[P. 187A] MARAVI, PR4

M 584 be gone through soon. Betrothal, however, is a
582 gradual process, whose culminating ceremony cannot take place until the marriage has been consummated. Ancient custom here varied, but it seems that the majority of Nyanja and Yao girls married after puberty, and to young men not very much their senior. Meanwhile, Abena calls all her boy cousins "brother-in-law", (*alamu*); she may call any one of them jokingly "my husband", (*amunanga*), and he retaliate with "my wife", (*akazanga*). There exists between them, in fact, a relationship similar to that found in many Bantu tribes and translated as "a joking relationship". The Nyanja call it *cibale cakuwahana*, which means literally "relationship of rudeness, vulgar familiarity, or swearing". It permits these cousins to call each other "Thou", (*iwe*), seldom heard even between brothers and sisters, to use great freedom of speech and much insolence to one another, and to indulge in horse-play together. Just how far this familiarity went in the old days, and still goes among pagans, it is impossible to discover; children, certainly, were accustomed to build grass houses together and play at families, (*kupanga masanje*), and a Nyanja writer on the subject of Bantu marriage believes that this involved a good deal of sexual play, and not necessarily only between betrothed cousins.

M 601 605 857

Abena also calls her girl cousins *alamu* or *anzina*, and is on very familiar terms with them; custom, indeed, seems to encourage a lack of respect between them, for Abena knows that if she does in time marry one of her boy cousins, his sisters will then feel entitled to walk into her hut and make free with her belongings, and expect her to do the same by them. Now they share with her their sleeping-mats in their grandparents' hut, together with their younger brothers. Other *anzanu* of Abena, children of her father's classifi-

M 601

Y n 614 n [582] (*mtundu*, or among the Ngoni and the Nyanja influenced by them, *mfumbe*),—say the Mwales'. His father is of another clan—as likely as not the Milanzis'—for it is considered incest for two Mwales to marry. He will tell you that he addresses every Mwale he meets, even a stranger from a far village, as "brother, sister, father, mother", (*achimwene*, *chemwali*, *atate*, *amai*) according to age and sex, and feels obliged to offer them help and hospitality—although this feeling is in most parts dying out. The Milanzis of his own generation whom he meets he considers in the same way as his cousins, (*asumani*), and treats, or used to treat, with the same friendly familiarity as his real cross-cousins at his father's home village.

n Y [608] [609]

n 174 614 [602] This extension of brotherhood to one's mother's, and cousinship to one's father's, whole clan, suggests that the Nyanja clans (into which possibly the Yao married) may have grown each out of an extended family group, (*mbumba*), living or travelling together. Cross-cousin marriage would follow naturally on friendship between two such nearby groups, for after a few generations of intermarriage the groups would become so connected that a man born into the one and marrying into the other would in actuality be marrying his cross-cousin. Moreover there is a tradition, at least among the Nyanja of Zomba District, which bears out the evidence of the relationship terms. Old people tell how the earliest leaders of their tribe entered the country, each surrounded by his *mbumba*, and settled first here then there ; they explain how each group came to be named, and how lasting friendship arose between the Amwale under Chief Mpoto and the Amilanzi under Chief Saima, and similarly between the Apiri and the Ankhoma, the Ambewe and the Achanza. Whatever truth lies behind this tradition, it is certain that to-day, however scattered the clans may be and however generally the young men reject cross-cousin marriage, yet a Mwale still calls "cousin" every Milanzi he meets and treats their women as potential mates ; and the same holds good between the Phiri and Nkhoma, Mbewe and Chanza clans.

n [582] n [173] n 177 601 582 614

11:Sanderson D-5 (ca. 1920) 1920 FT7 Yao FT7

601 In Table II, the relationships mentioned in Column 1 are defined in Columns 2-9.

Thus a brother (of (*a*)) is, *inter alia*, the son of (*a*)'s father's brother (Column 3), the husband of the daughter of (*a*)'s father's sister (Column 4), and so on (see Table II).

Before the tables can be fully intelligible, however, a brief explanation of terms having no English equivalent is necessary :—

(*a*) *Akwepo* and *Akwau* are terms exclusively given to relations by marriage.

Akwau is a brother or sister by marriage—it is not advisable to use the terms "brother-in-law" or "sister-in-law" as they are too circumscribed.

Akwepo has not even an approximate equivalent in English owing to the diversity of relationships included (*e.g.*, wife's mother and great-grand-daughter's husband).

Meidani is a special term given to the children of a paternal aunt or maternal uncle, to distinguish them from those of a paternal uncle or maternal aunt.

[582] *Meidani* are not only allowed to marry but are encouraged to do so.

Akwelanse is used only for a maternal uncle, and *chipwa* is the reciprocative term for a sister's son.

The use of inverted commas with English terms (*e.g.*, "brother") indicates that the person is regarded by the Yao as being of the same relation to him as the term usually signifies in English. Thus a Yao regards the son of his maternal aunt, for instance, as being exactly the same relation as his own brother (by the same parents); this relationship is indicated as "brother."

601 428 *Succession.* The common rule of discriminating between the children of a brother and sister and those of two brothers or of two sisters is present here, and is combined with the equally common one of succession to the sister's son.

The rule of succession is, strictly speaking, to the eldest son of the eldest sister. If, however, a man and his advisers consider him to be unsuitable, or in event of his death, the succession passes to the following in order of precedence : younger son of the eldest sister, younger son of a younger sister, and son of own daughter.

Only by general consent can the succession pass elsewhere, but it not infrequently happens that intrigue procures the death of all the legal heirs of a wealthy or powerful man. In such cases, but only by general consent, the succession may pass to a brother (by the same mother), any "son," or even to a powerful vassal ; it is often felt that a wealthy or influential man is likely to conduce to the peace and welfare of the country rather as the chief, than as a probably turbulent vassal of a man whose succession is apt to be controversial. On the death of such a man, however, matters are often in a state of chaos owing to the multitude of claimants, the members of the two families ; I have known two such cases. A man, also, who

[TEXT CONTINUES ON PAGE 374--ANALYST]

11:Sanderson D-5 (ca. 1920) 1920 FT7 Yao FT7

601 428 knows that he is not legally justified in "entering into the name" is loath to do so, as he knows that he is not expected to make a successful chief. The defeat of Salimu, the fifth Makanjila, by the British in 1893 was, and still is, ascribed to the fact that he belonged to the male line.

The term *chipwa* (*wuipwangwao*, "his *chipwa*") may be used for any child of a sister. A female title (common amongst the Yaos) descends to the eldest daughter of the eldest son of the bearer of the title.

582 601 587 *Marriage.*—Relatives who are forbidden to marry are called *achidwanko*; they include all those given in the table except *asidwai*, *achiwenkulu* ("grandchildren"), and the wife of the maternal uncle. An heir, on succeeding, may marry the wife or wives of his maternal uncle, but not if he has previously married one of his daughters.

It is legal, though rare, for a man to marry the daughter of his own child (*chisukulu*).

614 601 "*Brothers*" *and* "*Sisters.*"—The term *ulongo* is used to describe an exogamous clan, and the members are known as *mlongo* (singular)—*achalongo* or *da chilongo*, collectively. This word *mlongo* is probably a corruption of *wa ulongo* ("in the clan") as it requires the use of the term *mjakwe* (*ajao*) "a companion," instead of the possessive pronoun. Thus *mlongo mjakwe* (*achilongo ajao*), "his (their) clan relatives" (instead of *mlongo jwakwe*, *achalongo wao*).

601 There is no general term corresponding to the English "brother." The nearest is *alumbu*, which describes the relationship between a "brother" and a "sister," it is rarely used by women, however.

The elder "brother" of a man is called *akulu* or *achimwene*. These terms are used for all sons of a father's elder "brother" or of a mother's elder "sister," and for the elder brother by the same parents. They are also used by a woman for any "brothers," older or younger, senior or junior, in preference to the term *alumbu*.

Mpwanga is used for a son of a father's younger "brother" or of a mother's younger "sister," and for a younger brother by the same parents. It is used by a woman for her "sisters" in exactly the same way, but is never used by a woman of a man.

A man calls his "sister" *chemwali*, collectively, *wanajawo chemwali*; a girl refers to an elder, or senior "sister," by means of the same term; a man refers to a "sister" as *alumbwangu* or as *chemwali*.

The term *chisukulu* is used for a "grandchild" (*wwisukuluwangu*, "my 'grandchild'").

"*Father*" *and* "*Mother.*"—A paternal aunt is distinguished as *atati wakonjwe* ("female father") if necessary, though she is, of course, not addressed as such. The elder brother of a father is referred to as *atati wakulungwa* ("the great father"), his younger brother as *atati wanandi* ("the little father"). Other *achatati* are similarly distinguished.

1: Tew E-4 (no date) 1950 FT7 Yao FT7

expressed also in the speeches by the marriage sureties. The couple are exhorted to refer disputes to the sureties, and to consult the diviner in case of sickness.[1] After the rite these two sureties have special responsibilities towards the couple; grievances are referred to them, and they must be present when adultery cases are heard in court. If the marriage witness ceremony has not been performed, the relationship is not regarded as legal and no adultery compensation can be claimed by the husband. 585

Divorce used to be a private affair, which was merely signalized by one party giving to the other an arrow as a token of separation.[2] Nowadays all divorce cases go to court. The woman is usually asked to choose between her husband and the adulterer, and the compensation paid to the former, if she decides to leave him, is higher—amounting to about 10r. A man can be sent away from the village by his wife's kin, but if he has given no grounds for divorce he can claim compensation and will also take back any gifts made to his wife. A few small gifts to his mother-in-law are not reclaimed. Divorces are easily obtained and frequent. Grounds for the divorce of a man may include failure to pay hut tax, one of the specific duties of the husband. 586 [431]

The custom of making a marriage payment is recorded by Johnson[3] (on the east coast of Lake Nyasa) as a relatively new adoption. When given it is divided between the bride's father, mother, and mother's brother and brother.[4] 583 177

Slavery

Domestic slavery was an important institution in the Yao social system. Slaves were obtained by capture, purchase, or in compensation for injury.[5] A man would pay a debt by giving slaves (wives or members of his matrilineal kin group) to his creditors.[6] A man might voluntarily enslave himself to a man having charge of many women, as a means of obtaining a wife.[7] The children of a free man and a slave woman were not emancipated, as their father could not take them from the village of their mother's master, who had the right to sell them.[8] Slaves took part in the ordinary life of the village; women slaves ranked as junior wives of their masters and shared the usual work of women. Men might be supplied with guns for hunting or might accompany their masters to war, trade for them, spin, weave, sew, make baskets.[9] The institution of domestic slavery was an expression of a dominant motif in Yao culture—the association of status with a large number of dependents. Its abolition by the British was in itself a major blow to the prestige and authority of the chiefs. 567 [554]

Information about the social organization of the Yao in Portuguese East Africa is scanty, but it is in agreement with what is known of the Nyasaland Yao; Heckel, who knew the Yao in Lindi district, Tanganyika Territory, confirms the correctness of Stannus's account of the South Nyasa Yao. 184 602

The Yao came into Nyasaland in small parties of kinsmen. Their experience and their superior weapons soon enabled them to dominate the Nyanja among whom they settled, and today they dominate the population of the Southern Province. They are organized into loose groups of villages, under petty, independent chiefs. They seem 175 [621] [631]

[1] Stannus, 4, 1922, p. 245; Hynde, 1895; Johnson, 3, 1922, pp. 69–73; Macdonald, 1882, vol. i; Werner, 1906, pp. 129–32.
[2] 1922, pp. 72–3.
[3] Stannus, 4, 1922, p. 280.
[4] Stannus, 4, 1922, p. 280.
[5] Werner, 1906, pp. 152–3; Stannus, 4, 1922, p. 237.
[6] Stigand, 1909, p. 122 (not a reliable source).
[7] Macdonald, 1882, vol. i, pp. 166–7.
[8] Ibid.
[9] Werner, 1906, p. 273.

2: Mitchell E-5 (1946-1949) 1956 FT7 Yao FT7

village but called it Mtuweni and not Mpumbe village. The positions of the lineages in the village would have become inverted, and the patrilaterally-linked lineage become the dominant lineage. In this way villages may change their name or they may acquire two names, as happened to Mlungu village in Nyambi's area. Here a man called Masalu took over the control of the village. He was the son of the previous Mlungu and the village is known to-day by either of these names. The interesting point is what will happen when he dies, because there are now sisters' sons in a distant lineage old enough to take charge of the village. The rule is, as we have seen, that the matrilineal relatives always have the first claim.

Paternity and Segmentation

It is interesting to note that the paternity of brothers or sisters is not a differentiating feature in these social relationships. In the discussions which have hinged upon the care of sorority-groups I have never heard the paternity of brothers and sisters brought up as a reason why they should hold more or less closely together. The father is important in social life as I point out later, but while groups may be linked through paternity, it does not lead to a second principle of segmentation within the lineage.[1] This is manifestly the result of the fundamental difference in a system of matrilineal descent, where paternity is of less consequence than maternity is in a patrilineal structure. Among the Yao, unlike the patrilineal peoples of Southern and Northern Africa, no marriage payments are made; divorce is easy and frequent, and there are no disputes about the custody of children, who always belong to their mother's group whether they are illegitimate or not.[2] This is consistent with the view of the husband as a mere begetter of children. Among the Yao, the

[1] This aspect of segmentation in patrilineal peoples, with different wives of men as points of fission, is brought out particularly in Evans-Pritchard, E. E., *The Nuer*, Oxford University Press (London, 1940), and *Marriage and the Family among the Nuer*, R.-L.I. Paper, No. 11 (1944); Fortes, M., *The Dynamics of Clanship*, and *The Web of Kinship*; Kuper, H., *A Black Aristocracy*, Oxford University Press (London, 1947).

[2] This has been worked out in Gluckman, M., 'Kinship and Marriage among the Lozi of Northern Rhodesia and the Zulu of Natal', in Radcliffe-Brown, A. R., and Forde, C. D. (eds.), *African Systems of Kinship and Marriage*, Oxford University Press for the International African Institute (London, 1950).

585 drum of her married life begins. The man and woman live together peaceably enough as
a rule, each attending to his own sphere of work. The man builds the house, the woman
462 mude the floors; she sweeps and cooks, she is the hewer of wood and drawer of water. The
man hunts, fishes, makes mats, baskets, the grain store, game traps, and bark-cloth; he
looks after the tobacco, and makes the snuff, while his wife brews the beer. He it is who
fashions the gourd vessels and carves the spoons, while the woman is the potter (Pl. III, 4)
and pipe-maker. Together they hoe and together they harvest, but to the woman falls the
monotonous drudgery of pounding and sifting the corn for flour.

842 The Yao have a custom like that of the Anyanja. A sister brings to the house of the
newly wedded pair a log of green wood from a *mbanga* tree which is very hard; the log
[522] may be two feet in diameter and four feet long. Should the bride not become pregnant
before it is burned away, the husband is laughed at and they may both be teased by having
[558] many logs brought to the house. A man who has no children is much despised and there
is a saying, "He must have eaten some ground-nuts," punning on the word for a thick-
akinned variety of ground-nut, *chimbuwila*, a word which also means sterility. An impotent
[837] man may, with the consent of his wife, introduce some male friend into the house, any
children born in consequence being claimed as the husband's. He usually chooses some
friend from a distance to obviate any attachment springing up between him and the wife.
Two married couples may, all consenting, exchange consorts for the night, but they never
live together like this for long periods.

582 There is one well-defined marriage taboo; a man may not marry a woman of his own
clan. In the old days, he was also restricted to his own tribe, except in the case of slave
[611] wives and wives by capture. Since the clan is inherited from the mother,[1] a man may not
marry the daughters of his maternal aunts, but he may marry his other female cousins.
[587] He may not marry two sisters nor a deceased wife's sister; neither do two brothers marry
two sisters.

595 The number of wives is limited only by the husband's ability to provide for them. In
addition to free wives, a man might formerly have a number of slave wives. The head wife
is called *kusyeto*, the other wives, *mangumba*. The word given by Macdonald, *akusyeto*,[2]
meaning the junior wives, is a Chinyanja word and, I think, wrongly applied.

582 It has been said that a man always marries into the village of his wife. For this reason,
[842] female children are always prized as it means an increase in the number of able-bodied
men added to the village. In rare cases, the wife might be taken to the husband's village,
[583] as is the Anyanja practice.[3] This, of course, is true in the case of chiefs and headmen. Here,
we may also note that no payment is made for the wife and no dowry is received with her.

584 To revert to betrothal, occasionally the sponsors will not agree to the marriage and a
843 runaway match takes place, but in the end, the marriage is usually regularised by the
sponsors coming to an agreement. If, however, the woman has in the meantime become

[1] Vide infra, p. 283. [2] Op. cit., p. 134. [3] Stannus, op. cit., p. 302.

10: Barnes E-5 (1946-1949) 1959
FR5 Ngoni FR5
Mpezeni
Yao FT7

N Y 648 691

The Yao are mistrusted more than any other tribe, and some of the decisions taken by the courts are harsh on Yao. For example, a Yao man who was married to an Ngoni woman had, it was alleged, caught venereal disease from his wife. His wife then applied to the courts for a divorce, which was granted, together with the custody of the children. No bride-wealth had been paid in the marriage, but the husband now offered to pay in order to retain the children. This bride-wealth was refused by the woman's parents. The Yao appealed, but the judgement was upheld, and in addition he was ordered to go back to Nyasaland at once. He asked for permission to return to the woman's village in order to collect his belongings, and this was granted by the court, after first securing agreement between the couple as to the extent of his possessions, to wit, four plates and two beds. This deportation order was made despite the fact that the Yao had been living with his wife for twenty-one years. If a man of some other tribe had been involved, it is unlikely that he would have been ordered to leave the country, nor would the court have been so suspicious of his trying to take away more than his rightful share of the household possessions.

N Y 648 583

A Yao, who had a good job in Fort Jameson, once offered 30*s.* to the Paramount Chief when he was in the town as the legalization payment for a woman of the royal lineage whom he wished to marry. The Paramount Chief refused the money on the ground that the man was a Yao and he was not going to permit Yao to marry into the royal lineage, despite the protest of one of his lieutenants that the Yao was just a man like anyone else.

N 186 609 N Y 648

The reason that is given for this dislike of Yao is that they are sexually very virile, due to the medicines that they possess for increasing potency. It is perhaps significant that the same is said of Indians, who are also disliked. The Yao are known among the Ngoni for their great knowledge of medicines of all kinds, and the allegation of unnatural sexual vigour may be a rationalization of the fear that the Yao may practise sorcery among the families into which they marry. Another factor that may operate is that the Yao are the only tribe in the region that the Ngoni cannot claim to have conquered.

Political Relations with Other Tribes

N 648 721

Before the European conquest relations between the Ngoni and other tribes were principally those of raiders and raided. The great season for raiding was after the harvest, when the surrounding tribes

1: Tew E-4 (no date) 1950 FT7 Yao FT7

every adult member is a matrilineal descendant of a single ancestress, or a spouse of one of these people. All husbands are called *alamu* by the male members of the descent group, but husbands call each other by the kinship terms for older and younger brother (i.e. *acimmeni* or *mpwanga*) according to the seniority of their wives. Similarly undifferentiated in kinship terms are the wives of all men of the descent group, who call each other 'sister'.

The husband is expected to work in his wife's garden, to help his mother-in-law, and also, in the early stages of marriage, to avoid her. His attitude to his father-in-law is one of respect, relaxing as time goes on. His attitude to his wife's brother is also one of respect, which covers feelings of latent hostility. Although husband and wife's brother co-operate in affairs relating to the woman and her children (e.g. they jointly consult the diviner in case of illness, and the brother-in-law hears grievances the husband may have against his wife), there are elements of conflict arising from their competition for the affection of the woman and her children.

Patrilocal marriages are the rule in certain cases. The village headman commonly has his wife in his own village. At his death his widow may return to her own village, but if her daughters have married locally she may stay, and one of her sons, as warden of his sisters, will also stay and marry patrilocally, as did his father, the headman. Thus a new matrilineal descent group, linked to that of the headman by a patrilineal link, develops. In every generation the number of separate but related matrilineal descent groups would double, and at such a rate of proliferation it might be expected that any village would contain many family groups. In fact, however, most members of a village can trace their descent from a common ancestress removed not more than about five generations. There are two reasons for this degree of homogeneity in the kin-grouping in the villages. One is that the villages tend to split up as they become too large and complex. The other is that the introduction of a new matrilineal descent group is often avoided by a cross-cousin marriage by the headman of the village or the warden of a sorority group.

There is a joking-relationship between cross-cousins, that is, for example, between the village headman's children and his sisters' children. The latter, as members of his descent group, have interests and loyalties opposed to those of his own children. Although there is a strong tradition of cross-cousin marriage, such marriages are said to be likely to be unstable.

Betrothal and Marriage

Child betrothal was common among the Yao. Acceptance of a loin-cloth and the wearing of it was token of betrothal, giving the groom exclusive rights over the girl.[1] The negotiations for an adult marriage are conducted by senior matrilineal kinsmen of the parties, who at the subsequent ceremony act as witnesses or sureties to the marriage. Usually the senior is the mother's brother, and the junior the brother. The act of validation, the *Cingoma* rite, takes place some time after the husband and wife have been living together. They meet in the hut of the woman for the rite, which consists in eating two pots of porridge, prepared by the female relatives of each party. The man's people bring a cockerel and the woman's a hen for relish. The exchange of food symbolizes the exchange of members of each matrilineal kin group, which is

[1] Macdonald, 1882, vol. i, p. 118; Johnston, 1897, pp. 411–13.

3: Stannus D-5 (ca. 1912) 1922 FT7 Yao FT7

After the defeat of Kumtaja, Chikusi and his Angoni routed Kumtumanja, a brother of Malemya, who had also been making a nuisance of himself. Kumtumanja, who suffered from a large hydrocoele, is supposed to have lost his balance on account of this impediment, and fallen into a stream where he had stopped to drink and to have been drowned. 175 167 648

The Angoni still burned for more warfare, and Malemya, fearing that with his work done, they might prove a nuisance to him, turned them on to the Amangoche Yao around Blantyre. Thither they set off on a raiding expedition and returned to their own country via Chiradzulu. This raid took place in 1884.

During the next few years, Kawinga, who had always held a grudge against Malemya for having got ahead of him to the best country, occupied the chief with raiding and warfare. In 1891, Wandalama died, and was succeeded by Chisala, the son of his sister, Chisigere, and at the present time, he is the reigning Malemya.

It is of these Amachinga Yao under Malemya that the following notes are written. I have gone at some length into the history of these people in order to disarm criticism by those who, familiar with other sections of the Wayao, may not agree with all my statements.

Life History. Generally speaking, the life of the Yao native in the old days was full of ease spiced with the excitement of intertribal warfare. He cultivated his crops, kept a few goats and chickens, and relieved the monotony by hunting. Even domestic slavery was not a great hardship, nor did the Yao probably suffer from coast slave-raiding to the same extent as many other tribes. As children, they are wont to spend their days free from care, seldom reprimanded, and rarely or never physically chastised. During youth, the same easy lot is theirs, with the addition from time to time of a few small tasks; minor household duties for the girls, such as drawing water, sweeping the hut, and "minding" the baby, while the boys hoe or fetch and carry for their fathers in the village or in the bush. Left to their own devices, they play games,[1] dig out rats' nests, or shoot birds with bows and arrows. 181 857

Now, as formerly, when they are about five years old, the girls usually go to live with their grandmother who may thus have a number of children around her; or several girls of a somewhat more advanced age may sleep together in a hut dormitory. Boys of this age all live in a big hut called *nyumba ja chachanda*, "the boys' dormitory." This is their quarters until one by one they leave to get married. The girl, similarly, remains in the girls' dormitory or with her grandmother until she is taken in marriage.

Puberty. The first interruption of this placid life of youth is the onset of puberty or the first initiation ceremonies.[2] Formerly, these ceremonies took place after puberty but of late years, as is pointed out elsewhere, they are performed much earlier. 881

Child betrothal. Bethrothal in childhood or before birth is not uncommon. A woman learning that some friend of hers is pregnant will arrange that if a girl is born, her son will marry the friend's daughter, or a man taking a fancy to a little girl will select her as his 584

[1] Vide infra, p. 337. [2] Vide infra, p. 346.

584 betrothed. In this latter case, the child lives with one of his wives and is brought up in his house.

881 When this girl first menstruates, she tells the man's wife who in turn informs her husband. He then goes out into the bush with his axe, while the wife reports to the young girl's mother and to the man's female relatives. The girl is put to rest on a mat in the hut, the women remaining with her after shutting and fastening the door. The man, meantime, cuts a strip of bark, hammers it out into a piece of cloth, and puts the cloth, wound round and round the stem of the tree from which he has taken it, on the roof of the hut where the girl lies. The first passer-by who notices this sign, spreads the news; then all the women in the village assemble and trill with their tongues to show their joy, while the women in the house sing.

Until the girl's menstrual period is over, the old women relatives sleep each night in her hut, and instruct her in the taboos relating to menstruation. The front door is kept closed, and exit for purposes of nature is made only through the back door. When the girl is up again, the fire in the hut is extinguished, the bark-cloth which she has worn and her sleeping mat are rolled up and put away in the veranda-room, and the girl, having procured clay, replasters the floor of the entire hut. A woman then brings fresh fire from another hut.

841 At subsequent menstrual periods, there is no ceremony. The girl, as is the custom of all women at such times, must sleep on a mat apart from her husband. Sexual intercourse is strictly forbidden under penalty of dire sickness. For the same reason, no menstruating woman may put salt in the food, etc. Until the girl's first menstrual period is over, the man to whom she is betrothed stays in the hut of another wife. Later, he may cohabit with the girl.

881 If the girl has not been to her initiation ceremony, *Chiputu*,[1] on returning to her husband's hut after this ceremony, the first coitus takes place in the veranda. It must be in-
833 complete, so that ejaculation takes place after withdrawal and the semen falls upon her cloth. This should be taken by the girl to some of the old women in the village who report on the proceedings. Should withdrawal not have taken place, the man is considered bad and the girl, unless doctored, may sicken. Later, ordinary cohabitation is allowed. This species of ceremonial coitus is called *Kusasa mauta* or in Chinyanja, *Ku-taya mafuta*, "to roll away the oil," referring to the oil with which the girl was anointed at *Chiputu*. A girl who has no betrothed, on returning from *Chiputu* to her grandmother is given medicine similarly to prevent her sickening.

584 *Betrothal and marriage in adult life.* Apart from child betrothal, when a man seeking a wife, sees a girl he fancies, he talks the matter over with his brother, uncle, or some friend, who then goes and makes overtures to the girl's uncle or brother, her guardian or *nposue*[2] as he is called. The *nposue* corresponds very closely to our idea of a god-parent; he may be called the sponsor. The word "surety" is used by Macdonald.[3]

[1] Vide *infra*, p. 269. [2] *Nposue* is a word adopted from the Chin, *Nhoosu*.
[3] Macdonald, op. cit., vol. 1, p. 118.

3: Stannus D-5 (ca. 1912) 1922 FT7 Yao FT7

If the suitor receives a favorable reply, he informs his father and the elders of his village and then goes to the girl's village where he begins to build a house and spends much time performing duties for the girl's parents, such as hoeing. If, after a month, he is approved, the girl's people send a messenger to the man's village, asking, "Have you missed anyone from your village?" The answer is, "Yes, So-and-So," to which the reply is given, "Well, he is here with us." The man's people then arrange to come to the girl's village on a certain day. 584

On the appointed day, the two sponsors (*ngoswe*) on each side, meet in the village open space and being assured that there is nothing to prevent the marriage and the man and woman being willing, the tie is made. There is no formal ceremony or token of marriage between the man and woman. Porridge is cooked for the sponsors and a fowl provided. The back of the fowl is broken by the elder sponsor as a sign of the compact. The man is exhorted by his sponsors to be a credit to them in his new village, while the woman is told by her mother and her aunt that they expect her to live an exemplary life. The man's chief sponsor tells him that no longer is he a member of his own village, but belongs to the girl's sponsor, and the converse is told to the girl. Hereafter, in all matters relating to them as married people, the girl will consult her husband's sponsor and vice versa. The elder sponsor on both sides is called *mpopo wakugona*, borrowing from Chinyanja, "a log lying down," and is usually an uncle; the junior is commonly the brother of the bridegroom. 585

On leaving the girl's village, the *mpopo wakugona* will say, "You will see me no more in this village but this, my younger companion; if you see him, you will know he comes from me." The sponsors' responsibilities last so long as the pair lives, unless they separate for some reason. Thus, should the husband's goats die or should he lose his axe, the woman reports to his sponsor. If the husband kills an antelope, the sponsors receive some portion of the meat. If a village is to be moved, the inhabitants consult the sponsors of every married couple. In this way, the sponsors become the repository of all the events of the married life of the husband and wife and in case of any dispute or untoward event, theirs is the accredited testimony on family matters. The account given by Macdonald,[1] I venture to think may be incorrect.

Should the *mpopo wakugona* die, the junior sponsor takes his place and a new junior is appointed. The new *mpopo wakugona* sends a message to the other party's *ngoswe* telling him of the change, at the same time presenting him with a fowl. As he may be acting for a number of people, he may have to distribute several fowls; later, he visits his confreres.

Following the marriage compact and the departure of the *ngoswe*, the married pair go away quietly to the house the man has built for his wife, or she may wait until evening and, if she is shy, she may be accompanied by an elder sister, or may be sent with food for her husband. Consummation may not take place for a day or two, after which the hum- [591]

[1] Macdonald, op. cit., p. 120.

585 drum of her married life begins. The man and woman live together peaceably enough as a rule, each attending to his own sphere of work. The man builds the house, the woman
462 mudds the floors; she sweeps and cooks, she is the hewer of wood and drawer of water. The man hunts, fishes, makes mats, baskets, the grain store, game traps, and bark-cloth; he looks after the tobacco, and makes the snuff, while his wife brews the beer. He it is who fashions the gourd vessels and carves the spoons, while the woman is the potter (Pl. III, 4) and pipe-maker. Together they hoe and together they harvest, but to the woman falls the monotonous drudgery of pounding and sifting the corn for flour.

842 The Yao have a custom like that of the Anyanja. A sister brings to the house of the newly wedded pair a log of green wood from a *mbunga* tree which is very hard; the log
[522] may be two feet in diameter and four feet long. Should the bride not become pregnant before it is burned away, the husband is laughed at and they may both be teased by having
[558] many logs brought to the house. A man who has no children is much despised and there is a saying, "He must have eaten some ground-nuts," punning on the word for a thick-skinned variety of ground-nut, *chimbuwila*, a word which also means sterility. An impotent
[837] man may, with the consent of his wife, introduce some male friend into the house, any children born in consequence being claimed as the husband's. He usually chooses some friend from a distance to obviate any attachment springing up between him and the wife. Two married couples may, all consenting, exchange consorts for the night, but they never live together like this for long periods.

582 There is one well-defined marriage taboo; a man may not marry a woman of his own clan. In the old days, he was also restricted to his own tribe, except in the case of slave
[611] wives and wives by capture. Since the clan is inherited from the mother,[1] a man may not marry the daughters of his maternal aunts, but he may marry his other female cousins.
[587] He may not marry two sisters nor a deceased wife's sister; neither do two brothers marry two sisters.

595 The number of wives is limited only by the husband's ability to provide for them. In addition to free wives, a man might formerly have a number of slave wives. The head wife is called *kusyeto*, the other wives, *mangumba*. The word given by Macdonald, *akusyeto*,[2] meaning the junior wives, is a Chinyanja word and, I think, wrongly applied.

582 It has been said that a man always marries into the village of his wife. For this reason,
[842] female children are always prized as it means an increase in the number of able-bodied men added to the village. In rare cases, the wife might be taken to the husband's village,
[583] as is the Anyanja practice.[3] This, of course, is true in the case of chiefs and headmen. Here, we may also note that no payment is made for the wife and no dowry is received with her.

584 To revert to betrothal, occasionally the sponsors will not agree to the marriage and a
843 runaway match takes place, but in the end, the marriage is usually regularised by the sponsors coming to an agreement. If, however, the woman has in the meantime become

[1] Vide infra, p. 282. [2] Op. cit., p. 134. [3] Stannus, op. cit., p. 309.

3: Stannus D-5 (ca. 1912) 1922 FT7 Yao FT7

pregnant, the meeting of the sponsors will have to be postponed until after the ceremony connected with her first quickening with child, *Litiuo*.[1] This ceremony must be performed whether the girl is regularly married or not. One party cannot ask the other for permission that both ceremonies take place at the same time. The answer would be given, "You are asking me to kill two beasts with one bullet." In rare cases, the chief may sanction the marriage and *Litiuo* ceremonies taking place at about the same time, i.e. the marriage is arranged before the child is born. 584 843

Widowhood. A widow is considered unclean for a period after the death of her husband. She wears a band of palm-leaf or string around her forehead. When the period is passed and some man wishes to marry her, arrangement is made with some other man to cohabit with her for payment; she is then said to be clean and can go to her prospective husband. This ceremony is called *kutema ngonji*, "to cut the strings," or in Chinyanja, *ku-dula mlase*, "to cut the palm"; unless it is performed, the new husband will sicken. The man introduced for the purpose is called by the Yao, *kitunu*, the "hyaena," "he who comes by night." 589 587 [833]

Divorce. From time to time, married people disagree and one deserts the other. If the woman leaves the man, he has a claim against her and the man to whom she goes for all the clothes he has supplied her with during their married life. The husband usually sides with the wife's relatives and arranges that they look after the children; he does not claim them. When the husband and wife mutually wish to separate, they both meet with their sponsors and everything is duly arranged. The husband will give his wife an arrow, saying, "*Mpumba* (the arrow)," meaning, "If I come back, may it kill me." The place of the arrow may be taken by a bullet or any other object, even a piece of grass. The man will add, "*Swaka, swaka, no likoswel* (rattling, rattling, it is a rat!)," inferring that if his wife hears something rattling in the house, it is a rat, not himself trying to come back. There is no definite payment of compensation. If the woman marries again, she presents the "arrow" to her second husband as a sign that she has been freed from her first marriage; without this token, no man would marry her. 586

Actual adultery was in the old days very rare owing to the strict enforcement of rules, and the case of a woman demanding divorce on account of the adultery of her husband formed a *cause célèbre*. The case heard by the chief would last for days and hundreds of people would come to listen. Neighboring Anyanja pleaders would be invited to speak and great excitement prevailed, as these latter would be accompanied by their villagers, who, to the accompaniment of continuous drumming, would sing, "*Mbawala anakadwa m'nkonde*,[2] (The bush-buck has run his head into the net)," while they ran about running their heads into their game-nets. 684 586

Other causes of separation are neglect of duty, sterility of the wife, and habitual death of the children born. 586

[1] Vide infra, p. 274. [2] Chin.

ndembo, a woman who is pregnant for the first time;[1] *kavembere*, a woman who has one or two children; *mjembere*, a woman who has three or four children, and lastly, *nkolwa*, a woman who is past child-bearing age.

The information which I have been able to collect on abortifacients and contraceptives suggests that they are not used by married people merely to prevent their having more children, but that they are used by people who wish to avoid pregnancies which would be embarrassing, for example, by a woman whose husband is a labour migrant. To what extent the abortifacients and contraceptives are efficacious I cannot say; some, I know for certain, rely on a magical principle, for example, the medicated cord worn by a man during intercourse. On the other hand, the abortifacients taken orally may have some active ingredient.

A barren woman or an impotent man is regarded with some embarrassment and the marriage sureties (*acinamangeswe*) of a childless couple will go to considerable trouble and expense consulting diviners and leeches in an attempt to make their wards productive. Childless couples are regarded as not fully adult and are treated in a patronizing way by those who have borne children. Since a man may marry other wives, barrenness in a woman is a cause of sorrow to her husband, but is not in itself a ground for divorce. Where the man is impotent, however, the woman may divorce him on this ground, though she usually takes a paramour and forces her husband to an action for damages which automatically leads to a divorce because it is the usual practice in these cases for the court to ask the woman if she wants to be divorced from her husband.

In contrast to the satisfaction shown at the birth of a child is the sense of awe evinced when a child is still-born or the woman miscarries. The Yao do not distinguish between still-births and abortions, both events being known by the word *kwasanga*. This is a verb and refers to the process of abortion; there is no term for the dead foetus itself. I made no attempt to enumerate miscarriages and still-births because they are supposed to be due to breaches of sexual taboos on the part of the husband and wife, and interviewees were naturally reluctant to mention them. Miscarriages and still-births are greatly feared, and the woman is considered to be in a very dangerous condition until she and her husband have carried out a ritual purification. Should a man have intercourse with a woman who has miscarried and not yet been purified he will contract a disease called *lwazo* which is believed to be invariably fatal. Still-born children or aborted foetuses are buried in a hole dug with sharpened sticks in the bush by the women, whereas children who are born alive and die afterwards are buried in the graveyard in graves dug by men with hoes. The burial spots of still-born babies or aborted foetuses are marked with a stone or broken pottery, since it is believed that to step on them will induce an illness.

The concern of the interested kin-groups is shown in the child-birth procedure. Birth normally takes place in a hut in the presence of the older female relatives of the woman and the female representatives of the man. The husband's representatives are necessary because the Yao, like many other Central African peoples, believe that an adulterine child will not be born to the woman unless she confesses (*kupaca*) the name of the genitor. If she persists in concealing the identity of the genitor, they

[1] *ndembo* – elephant, hence ivory. The terms *lisibo* and *ndembo* here both refer to the ivory beads traditionally worn by the woman in the pregnancy initiation ceremony.

1: Tew E-4 (no date) 1950 FT7 Yao FT7

621 every adult member is a matrilineal descendant of a single ancestress, or a spouse of
619 one of these people. All husbands are called *alamu* by the male members of the descent group, but husbands call each other by the kinship terms for older and younger
[601] brother (i.e. *acimuesi* or *mpwange*) according to the seniority of their wives. Similarly undifferentiated in kinship terms are the wives of all men of the descent group, who call each other 'sister'.

591 The husband is expected to work in his wife's garden, to help his mother-in-law,
606 and also, in the early stages of marriage, to avoid her. His attitude to his father-in-law is one of respect, relaxing as time goes on. His attitude to his wife's brother is also one of respect, which covers feelings of latent hostility. Although husband and wife's brother co-operate in affairs relating to the woman and her children (e.g. they jointly consult the diviner in case of illness, and the brother-in-law hears grievances the husband may have against his wife), there are elements of conflict arising from their competition for the affection of the woman and her children.

591 Patrilocal marriages are the rule in certain cases. The village headman commonly
622 has his wife in his own village. At his death his widow may return to her own village,
613 but if her daughters have married locally she may stay, and one of her sons, as warden
621 of his sisters, will also stay and marry patrilocally, as did his father, the headman. Thus a new matrilineal descent group, linked to that of the headman by a patrilineal link, develops. In every generation the number of separate but related matrilineal descent groups would double, and at such a rate of proliferation it might be expected that any village would contain many family groups. In fact, however, most members of a village can trace their descent from a common ancestress removed not more than about five generations. There are two reasons for this degree of homogeneity in the kin-grouping in the villages. One is that the villages tend to split up as they become
[582] too large and complex. The other is that the introduction of a new matrilineal descent group is often avoided by a cross-cousin marriage by the headman of the village or the warden of a sorority group.

605 There is a joking-relationship between cross-cousins, that is, for example, between the village headman's children and his sisters' children. The latter, as members of his
582 descent group, have interests and loyalties opposed to those of his own children. Although there is a strong tradition of cross-cousin marriage, such marriages are said to be likely to be unstable.

Betrothal and Marriage

584 Child betrothal was common among the Yao. Acceptance of a loin-cloth and the wearing of it was token of betrothal, giving the groom exclusive rights over the girl.[1] The negotiations for an adult marriage are conducted by senior matrilineal kinsmen of the parties, who at the subsequent ceremony act as witnesses or sureties to the marriage. Usually the senior is the mother's brother, and the junior the brother. The
585 act of validation, the *Cingonse* rite, takes place some time after the husband and wife have been living together. They meet in the hut of the woman for the rite, which consists in eating two pots of porridge, prepared by the female relatives of each party. The man's people bring a cockerel and the woman's a hen for relish. The exchange of food symbolizes the exchange of members of each matrilineal kin group, which is

[1] Macdonald, 1882, vol. i, p. 118; Johnston, 1897, pp. 412–13.

1: Tew E-4 (no date) 1950 FT7 Yao FT7

expressed also in the speeches by the marriage sureties. The couple are exhorted to refer disputes to the sureties, and to consult the diviner in case of sickness.[1] After the rite these two sureties have special responsibilities towards the couple; grievances are referred to them, and they must be present when adultery cases are heard in court. If the marriage witness ceremony has not been performed, the relationship is not regarded as legal and no adultery compensation can be claimed by the husband. 585

Divorce used to be a private affair, which was merely signalized by one party giving to the other an arrow as a token of separation.[2] Nowadays all divorce cases go to court. The woman is usually asked to choose between her husband and the adulterer, and the compensation paid to the former, if she decides to leave him, is higher—amounting to about 10*s*. A man can be sent away from the village by his wife's kin, but if he has given no grounds for divorce he can claim compensation and will also take back any gifts made to his wife. A few small gifts to his mother-in-law are not reclaimed. Divorces are easily obtained and frequent. Grounds for the divorce of a man may include failure to pay hut tax, one of the specific duties of the husband. 586 [431]

The custom of making a marriage payment is recorded by Johnson[3] (on the east coast of Lake Nyasa) as a relatively new adoption. When given it is divided between the bride's father, mother, and mother's brother and brother.[4] 583 177

Slavery

Domestic slavery was an important institution in the Yao social system. Slaves were obtained by capture, purchase, or in compensation for injury.[5] A man would pay a debt by giving slaves (wives or members of his matrilineal kin group) to his creditors.[6] A man might voluntarily enslave himself to a man having charge of many women, as a means of obtaining a wife.[7] The children of a free man and a slave woman were not emancipated, as their father could not take them from the village of their mother's master, who had the right to sell them.[8] Slaves took part in the ordinary life of the village; women slaves ranked as junior wives of their masters and shared the usual work of women. Men might be supplied with guns for hunting or might accompany their masters to war, trade for them, spin, weave, sew, make baskets.[9] The institution of domestic slavery was an expression of a dominant motif in Yao culture—the association of status with a large number of dependents. Its abolition by the British was in itself a major blow to the prestige and authority of the chiefs. 567 [554]

Information about the social organization of the Yao in Portuguese East Africa is scanty, but it is in agreement with what is known of the Nyasaland Yao; Heckel, who knew the Yao in Lindi district, Tanganyika Territory, confirms the correctness of Stannus's account of the South Nyasa Yao. 184 602

The Yao came into Nyasaland in small parties of *kinamen*. Their experience and their superior weapons soon enabled them to dominate the Nyanja among whom they settled, and today they dominate the population of the Southern Province. They are organized into loose groups of villages, under petty, independent chiefs. They seem 175 [621] [631]

[1] Stannus, 4, 1922, p. 245; Hynde, 1893; Johnson, 5, 1922, pp. 69–73; Macdonald, 1882, vol. i; Werner, 1906, pp. 129–32.
[2] 1922, pp. 72–3.
[3] Stannus, 4, 1922, p. 280.
[4] Stannus, 4, 1922, p. 280.
[5] Werner, 1906, pp. 152–3; Stannus, 4, 1922, p. 237.
[6] Stigand, 1909, p. 122 (not a reliable source).
[7] Macdonald, 1882, vol. i, pp. 166–7.
[8] Ibid.
[9] Werner, 1906, p. 273.

3: Stannus D-5 (ca. 1912) 1922 FT? Yao FT?

If the suitor receives a favorable reply, he informs his father and the elders of his village and then goes to the girl's village where he begins to build a house and spends much time performing duties for the girl's parents, such as hoeing. If, after a month, he is approved, the girl's people send a messenger to the man's village, asking, "Have you missed anyone from your village?" The answer is, "Yes, Ilo-and-Ilo," to which the reply is given, "Well, he is here with us." The man's people then arrange to come to the girl's village on a certain day. 584

On the appointed day, the two sponsors (*sponse*) on each side, meet in the village open space and being assured that there is nothing to prevent the marriage and the man and woman being willing, the tie is made. There is no formal ceremony or token of marriage between the man and woman. Porridge is cooked for the sponsors and a fowl provided. The back of the fowl is broken by the elder sponsor as a sign of the compact. The man is exhorted by his sponsors to be a credit to them in his new village, while the woman is told by her mother and her aunt that they expect her to live an exemplary life. The man's chief sponsor tells him that no longer is he a member of his own village, but belongs to the girl's sponsor, and the converse is told to the girl. Hereafter, in all matters relating to them as married people, the girl will consult her husband's sponsor and vice versa. The older sponsor on both sides is called *mpupo wabupona*, borrowing from Chinyanja, "a log lying down," and is usually an uncle; the junior is commonly the brother of the bridegroom. 585

On leaving the girl's village, the *mpupo wabupona* will say, "You will see me no more in this village but this, my younger companion; if you see him, you will know he comes from me." The sponsors' responsibilities last so long as the pair live, unless they separate for some reason. Thus, should the husband's grain die or should he lose his ass, the woman reports to his sponsor. If the husband kills an antelope, the sponsors receive some portion of the meat. If a village is to be moved, the inhabitants consult the sponsors of every married couple. In this way, the sponsors become the repository of all the events of the married life of the husband and wife and in case of any dispute or untoward event, theirs is the accredited testimony on family matters. The account given by Macdonald,[1] I venture to think may be incorrect.

Should the *mpupo wabupona* die, the junior sponsor takes his place and a new junior is appointed. The new *mpupo wabupona* sends a message to the other party's sponsor telling him of the change, at the same time presenting him with a fowl. As he may be acting for a number of people, he may have to distribute several fowls; later, he visits his confreres.

Following the marriage compact and the departure of the sponsors, the married pair go away quietly to the house the man has built for his wife, or she may wait until evening, and, if she is shy, she may be accompanied by an older sister, or may be sent with food for her husband. Consummation may not take place for a day or two, after which the hum- 591

[1] Macdonald, op. cit., p. 108.

585 462 from of her married life begins. The man and woman live together peaceably enough as a rule, each attending to his own sphere of work. The man builds the house, the woman made the floors; she cooks and cooks, she is the hewer of wood and drawer of water. The man hunts, fishes, makes mats, baskets, the grain store, game traps, and bark-cloth; he looks after the tobacco, and makes the snuff, while his wife brews the beer. He it is who fashions the gourd vessels and carves the spoons, while the woman is the potter (Pl. III, 4) and pipe-maker. Together they hoe and together they harvest, but to the woman falls the monotonous drudgery of pounding and sifting the corn for flour.

842 The Yao have a custom like that of the Anyanja. A sister brings to the house of the newly wedded pair a log of green wood from a mbonga tree which is very hard; the log [522] may be two feet in diameter and four feet long. Should the bride not become pregnant before it is burned away, the husband is laughed at and they may both be teased by having [558] many logs brought to the house. A man who has no children is much despised and there is a saying, "He must have eaten some ground-nuts," punning on the word for a thick-skinned variety of ground-nut, chimbumbu, a word which also means sterility. An impotent [837] man may, with the consent of his wife, introduce some male friend into the house, any children born in consequence being claimed as the husband's. He usually chooses some friend from a distance to obviate any attachment springing up between him and the wife. Two married couples may, all consenting, exchange consorts for the night, but they never live together like this for long periods.

582 There is one well-defined marriage taboo; a man may not marry a woman of his own clan. In the old days, he was also restricted to his own tribe, except in the case of slave [611] wives and wives by capture. Since the clan is inherited from the mother,[1] a man may not [587] marry the daughters of his maternal aunts, but he may marry his other female cousins. He may not marry two sisters nor a deceased wife's sister; neither do two brothers marry two sisters.

595 The number of wives is limited only by the husband's ability to provide for them. In addition to free wives, a man might formerly have a number of slave wives. The head wife is called *bwanin*, the other wives, *mampumbu*. The word given by Macdonald, *ahwanin*,[2] meaning the junior wives, is a Chinyanja word and, I think, wrongly applied.

582 It has been said that a man always marries into the village of his wife. For this reason, [842] female children are always prized as it means an increase in the number of able-bodied men added to the village. In rare cases, the wife might be taken to the husband's village, [583] as is the Anyanja practice.[3] This, of course, is true in the case of chiefs and headmen. Here, we may also note that no payment is made for the wife and no dowry is received with her.

584 To revert to betrothal, occasionally the spouses will not agree to the marriage and a 843 runaway match takes place, but in the end, the marriage is usually regularised by the spouses coming to an agreement. If, however, the woman has in the meantime become

[1] Vide infra, p. 355. [2] Op. cit., p. 194. [3] Stannus, op. cit., p. 308.

1: Tew E-4 (no date) 1950 FT7 Yao FT7

expressed also in the speeches by the marriage sureties. The couple are exhorted to refer disputes to the sureties, and to consult the diviner in case of sickness.[1] After the rite these two sureties have special responsibilities towards the couple; grievances are referred to them, and they must be present when adultery cases are heard in court. If the marriage witness ceremony has not been performed, the relationship is not regarded as legal and no adultery compensation can be claimed by the husband. 585

Divorce used to be a private affair, which was merely signalized by one party giving to the other an arrow as a token of separation.[2] Nowadays all divorce cases go to court. The woman is usually asked to choose between her husband and the adulterer, and the compensation paid to the former, if she decides to leave him, is higher—amounting to about 10*s*. A man can be sent away from the village by his wife's kin, but if he has given no grounds for divorce he can claim compensation and will also take back any gifts made to his wife. A few small gifts to his mother-in-law are not reclaimed. Divorces are easily obtained and frequent. Grounds for the divorce of a man may include failure to pay hut tax, one of the specific duties of the husband. 586 [431]

The custom of making a marriage payment is recorded by Johnson[3] (on the east coast of Lake Nyasa) as a relatively new adoption. When given it is divided between the bride's father, mother, and mother's brother and brother.[4] 583 177

Slavery

Domestic slavery was an important institution in the Yao social system. Slaves were obtained by capture, purchase, or in compensation for injury.[5] A man would pay a debt by giving slaves (wives or members of his matrilineal kin group) to his creditors.[6] A man might voluntarily enslave himself to a man having charge of many women, as a means of obtaining a wife.[7] The children of a free man and a slave woman were not emancipated, as their father could not take them from the village of their mother's master, who had the right to sell them.[8] Slaves took part in the ordinary life of the village; women slaves ranked as junior wives of their masters and shared the usual work of women. Men might be supplied with guns for hunting or might accompany their masters to war, trade for them, spin, weave, sew, make baskets.[9] The institution of domestic slavery was an expression of a dominant motif in Yao culture—the association of status with a large number of dependents. Its abolition by the British was in itself a major blow to the prestige and authority of the chiefs. 567 [554]

Information about the social organization of the Yao in Portuguese East Africa is scanty, but it is in agreement with what is known of the Nyasaland Yao; Heckel, who knew the Yao in Lindi district, Tanganyika Territory, confirms the correctness of Stannus's account of the South Nyasa Yao. 184 602

The Yao came into Nyasaland in small parties of kinsmen. Their experience and their superior weapons soon enabled them to dominate the Nyanja among whom they settled, and today they dominate the population of the Southern Province. They are organized into loose groups of villages, under petty, independent chiefs. They seem 175 [621] [631]

[1] Stannus, 4, 1922, p. 245; Hynde, 1895; Johnson, 5, 1922, pp. 69–73; Macdonald, 1882, vol. ii; Werner, 1906, pp. 129–32.
[2] 1922, pp. 70–3.
[3] Stannus, 4, 1922, p. 280.
[4] Stannus, 4, 1922, p. 280.
[5] Werner, 1906, pp. 130–3; Stannus, 4, 1922, p. 237.
[6] Stigand, 1909, p. 122 (not a reliable source).
[7] Macdonald, 1882, vol. i, pp. 166–7.
[8] Ibid.
[9] Werner, 1906, p. 273.

2: Mitchell E-5 (1946-1949) 1956 FT7 Yao FT7

It is difficult to over-emphasize the importance of the sorority-group in everyday life. There is hardly a social situation in which the relationships of a man to his dependent female matrilineal kin are not involved. Probably marriage is the most frequent context in which his duties to and responsibilities for his sorority-group emerge. When a man wishes to marry a woman, he must get the consent of her brother. Ideally, it is a woman's brother who gives the consent, and if one asks a Yao how he gets married to any particular woman he will answer immediately, 'You go to ask her brother.' When consent has been obtained the woman's brother seeks out the man's brother and formally meets him, thereby setting the public seal on the relationships between the man and the woman. This gives the husband particular rights over his wife and her activities. After this, the difficulties of any of the marriage partners are the concern of the two sponsoring relatives (*acinamangosive*) whom I have called 'marriage sureties'. They meet to discuss the illnesses of either of the marriage partners or their children and try to settle the differences that arise in the married life of their wards. They must be consulted before the marriage can end, and in fact they perform the act that ends the marriage, i.e. one pays a nominal sum of say 2*s.* to the other.

According to the Yao, women are quite helpless in their relationships with others, in illness or in any court cases, and must always have a man to look after them. They are seen to be as dependent on him as children are upon their parents. A statement made to me by old Naliwa, a man who has been looking after a sorority-group for years, reflects this attitude of the men towards the women in their care.

These dependent women (*mbumbe*) are as annoying as children to look after. They are *mlani*[1] indeed. If a child is ill they go to tell their brother who says, 'Very well, I shall come to see the child.' If he is not very quick to do it they are likely to be backbiting. If he finds the child very ill he goes to tell the marriage sureties of its father, and they go to a diviner to look for medicine for the sick child. Then the sisters say that he is a good man because he gets on with the job when a person is ill.

Soon the child's mother becomes ill. Someone goes to tell her brother who says that he will come to see her. He visits her husband's

[1] Backbiting. See Chap. VI, pp. 137–8.

2: Mitchell E-5 (1946-1949) 1956 FT7 Yao FT7

village but called it Mtuweni and not Mpumbe village. The positions of the lineages in the village would have become inverted, and the patrilaterally-linked lineage become the dominant lineage. In this way villages may change their name or they may acquire two names, as happened to Mlungu village in Nyambi's area. Here a man called Masalu took over the control of the village. He was the son of the previous Mlungu and the village is known to-day by either of these names. The interesting point is what will happen when he dies, because there are now sisters' sons in a distant lineage old enough to take charge of the village. The rule is, as we have seen, that the matrilineal relatives always have the first claim.

Paternity and Segmentation

It is interesting to note that the paternity of brothers or sisters is not a differentiating feature in these social relationships. In the discussions which have hinged upon the care of sorority-groups I have never heard the paternity of brothers and sisters brought up as a reason why they should hold more or less closely together. The father is important in social life as I point out later, but while groups may be linked through paternity, it does not lead to a second principle of segmentation within the lineage.[1] This is manifestly the result of the fundamental difference in a system of matrilineal descent, where paternity is of less consequence than maternity is in a patrilineal structure. Among the Yao, unlike the patrilineal peoples of Southern and Northern Africa, no marriage payments are made; divorce is easy and frequent, and there are no disputes about the custody of children, who always belong to their mother's group whether they are illegitimate or not.[2] This is consistent with the view of the husband as a mere begetter of children. Among the Yao, the

[1] This aspect of segmentation in patrilineal peoples, with different wives of men as points of fission, is brought out particularly in Evans-Pritchard, E. E., *The Nuer*, Oxford University Press (London, 1940), and *Marriage and the Family among the Nuer*, R.-L.I. Paper, No. 11 (1944); Fortes, M., *The Dynamics of Clanship*, and *The Web of Kinship*; Kuper, H., *A Black Aristocracy*, Oxford University Press (London, 1947).

[2] This has been worked out in Gluckman, M., 'Kinship and Marriage among the Lozi of Northern Rhodesia and the Zulu of Natal', in Radcliffe-Brown, A. R., and Forde, C. D. (eds.), *African Systems of Kinship and Marriage*, Oxford University Press for the International African Institute (London, 1950).

2: Mitchell E-5 (1946-1949) 1956 FT7 Yao FT7

him. The woman in the meantime had run to Chiwalo's hut half a mile away. Here she complained to the chief that Mwanace wanted to kill her. Chiwalo refused to listen to her complaint and sent for Ali Kasunka. When he had come and explained the sequence of events, he continued saying that he would like to take the case to court. Chiwalo, who was Ali Kasunka's wife's father's sister's son (hence a classificatory younger brother) and whose henchman Ali Kasunka was, refused to arbitrate in the case but referred it to Kawinga. On the day of the case the woman's husband came back from the Army. The case was tried and eventually the court assessors awarded a damages claim of £3 to be paid by Mwanace to his sister. The husband, at the same time, said that he could not remain married to her because whenever he saw her he would think that she had slept with her brother and in court he gave Ali Kasunka a marriage termination payment. The tension between Ali Kasunka and his 'sister's son' did not end there however. When they got back to the village Ali Kasunka remonstrated with Mwanace saying, 'Are you not ashamed to have married your sister?' Mwanace said that he could not stand that sort of thing and went back to live uxorilocally.

A crucial point in this case history is that the women did not like Mwanace. Almost certainly there would have been a split in the village had the women had more confidence in Mwanace. The tension between Ali Kasunka and Mwanace, although the conflict is inter-generational, started, as it consistently does, from the relationships of a man to the women of his matrilineage. Without the support of the women, younger brothers or sister's sons are impotent against the power of their senior relatives. It is only when they can induce the women to follow them and to leave their rivals that they can found a new village and thereby begin to earn prestige. Therefore, although the men are the active agents in bringing about a physical act of fission, they are in fact only making manifest a situation which is latent within the lineage.

The position of the senior male matrilineal relative is of fundamental importance in questions involving segmentation. His position is seen most clearly in the dominant matrilineage, in which the name of the village is inherited. The Yao practise 'positional succession'. A man not only succeeds to his mother's brother's name but also to the position of the mother's brother in the social structure as a whole.[1] It follows that when the

[1] See Chap. V, p. 121.

2: Mitchell E-5 (1946-1949) 1956 FT7 Yao FT7

rationalized in the Yao theory of conception.[1] They believe 593
that after intercourse the semen clots and embeds itself in the
womb. From this the child develops and is nurtured by the 842
mother until it is due to be born. Subsequent acts of inter-
course add semen to the body of the child and make it fat.
Semen from other men may be used, too, to feed the child in
its intra-uterine life, but its body and blood are derived from
the semen which first clotted. In Yao opinion there can be
one father only.

Not all acts of intercourse lead to impregnation because some- 593
times, for various reasons, especially in immature women, the
semen fails to clot. There is therefore, to the Yao way of think- 842
ing, some difficulty in determining the 'father' of a child. This 845
difficulty is met by the belief that the intra-uterine child in some 848
way knows about the doings of its parents and in particular
knows who its father is. It therefore refuses to be born unless
its father is recognized.[2] Hence if a child is born without undue
puerperal complications it is assumed to be the offspring of the
man who is currently living with its mother. If labour is pro-
longed, however, the relatives call for confessions (*kupaca*) from
both husband and wife. The husband's confessions are usually
formal and simple. The wife's confessions on the other hand are
detailed and complete. She confesses the name of an adulterer,
and her midwives, including the husband's sisters as his wit-
nesses, wait for the next birth-spasm. If the child is not born
at this spasm she is told to confess again. Only after she has
confessed to a lover whom the Yao assume to be the genitor will
the child eventually be born. After this the aggrieved husband
summons the adulterer to court and he is made to accept the
fatherhood of the child.

The act of formally accepting the paternity of a child, which 593
is also done when a woman has a child out of wedlock, confers [848]
rights of two types on the child. The first set of rights is directly
economic and physical. The father is expected to give the mother
salt, money for relish, and cloth to help her rear the child. But
this side of a father's duties to his child ceases as soon as another 593
man marries the woman. The new husband than takes over the 586

[1] I have dealt with this more fully in *Marriage among the Machinga Yao*.
[2] It also refuses to be born for other reasons, but the first considered is always the adultery of its parents. See p. 138.

2: Mitchell E-5 (1946-1949) 1956 FT7 Yao FT7

593 economic responsibility of all the woman's children regardless
586 of whether he has begotten them or not. For example, gossips say that a woman married my clerk so that she could have her son initiated. The costs and fees for this boy's initiation amounted to over a pound.

593 The other set of rights that paternal recognition confers on the child are the moral rights against his paternal kinsmen. A
602 person may turn to his 'father's people' (*kucitati*) in times of dire need, especially if one of them is rich. This right persists after divorce, though the children are adult and otherwise economically independent. For example, a woman who was married to a labour migrant needed clothes badly. She turned to Chiwalo her father, though he had been divorced from her mother for more than 15 years. People in trouble often run away to their father's village and find shelter there. A man who wanted medicine for success in gambling asked his father for it. Another who had broken a sexual taboo confessed to his father who found suitable medicine for him. In each of those relationships there was an intimate personal element.[1] A person has the moral right to appeal to his father or paternal kinsmen, but he has no legally enforceable right to demand help. He has to rely on their kindness and charity. There are few fathers who would deny their children's requests if they are reasonable, but they can if they wish to.

582 The divorce rate is high among the Yao [2] and a typical family
586 of five uterine siblings may have three fathers. Furthermore, a man should not marry into the lineage segment where his brother
613 has married, so that the patrilateral kinship ties of the members of matrilineages tend to spread widely in the vicinity of the village. The effect of this is that the members of the lineage as a whole have widespread connections with neighbours upon whom they may rely in times of distress. But of the individual members of the matrilineage only a few share the same group

[1] Compare Fortes's description of uterine kinship among the Tallensi: '[It] is essentially by a personal bond, a bond of mutual interest and concern uniting individual to individual', *The Web of Kinship*, 37.

[2] Eight of every ten men and women over the age of 40 have experienced a divorce at some time of their lives. Excluding the contingency of death a married couple have only 30 chances in 100 of living together for 20 years. For details, see *Marriage among the Machinga Yao*.

3: Stannus D-5 (ca. 1912) 1922 FT7 Yao FT7

pregnant, the meeting of the sponsors will have to be postponed until after the ceremony connected with her first quickening with child, *Litiso*.[1] This ceremony must be performed whether the girl is regularly married or not. One party cannot ask the other for permission that both ceremonies take place at the same time. The answer would be given, "You are asking me to kill two beasts with one bullet." In rare cases, the chief may sanction the marriage and *Litiso* ceremonies taking place at about the same time, i.e. the marriage is arranged before the child is born. 584 843

Widowhood. A widow is considered unclean for a period after the death of her husband. She wears a band of palm-leaf or string around her forehead. When the period is passed and some man wishes to marry her, arrangement is made with some other man to cohabit with her for payment; she is then said to be clean and can go to her prospective husband. This ceremony is called *kutema ngonji*, "to cut the strings," or in Chinyanja, *ku-dula mlaza*, "to cut the palm"; unless it is performed, the new husband will sicken. The man introduced for the purpose is called by the Yao, *hitunu*, the "hyaena," "he who comes by night." 589 587 [833]

Divorce. From time to time, married people disagree and one deserts the other. If the woman leaves the man, he has a claim against her and the man to whom she goes for all the clothes he has supplied her with during their married life. The husband usually sides with the wife's relatives and arranges that they look after the children; he does not claim them. When the husband and wife mutually wish to separate, they both meet with their sponsors and everything is duly arranged. The husband will give his wife an arrow, saying, "*Mpamba* (the arrow)," meaning, "If I come back, may it kill me." The place of the arrow may be taken by a bullet or any other object, even a piece of grass. The man will add, "*Suuka, suuka, no likosusi* (rattling, rattling, it is a rat!)," inferring that if his wife hears something rattling in the house, it is a rat, not himself trying to come back. There is no definite payment of compensation. If the woman marries again, she presents the "arrow" to her second husband as a sign that she has been freed from her first marriage; without this token, no man would marry her. 586

Actual adultery was in the old days very rare owing to the strict enforcement of rules, and the case of a woman demanding divorce on account of the adultery of her husband formed a *cause célèbre*. The case heard by the chief would last for days and hundreds of people would come to listen. Neighboring Anyanja pleaders would be invited to speak and great excitement prevailed, as these latter would be accompanied by their villagers, who, to the accompaniment of continuous drumming, would sing, "*Mbawala anakadua m'nkonde*,[2] (The bush-buck has run his head into the net)," while they ran about running their heads into their game-nets. 684 586

Other causes of separation are neglect of duty, sterility of the wife, and habitual death of the children born. 586

[1] Vide infra, p. 274. [2] Chin.

2: Mitchell E-5 (1946-1949) 1956 FT7 Yao FT7

 582

of patrilateral kinsmen, so that these bonds are personal and 586
distinctive for each member. 613

The Development of the Corporate Identity of Patrilaterally-linked Groups

The parent–child relationship is reflected in the structural 591
relationships of a patrilateral group to the dominant matrilineage. 593
Children are less strongly tied to their father than to their matrilineal kinsmen. Usually when a woman dies or is divorced while living virilocally, her children return to her matrilineal village. If the children are too young to express their own wishes, their mother's brother comes for them and they are formally returned to their village of origin. Occasionally children who have grown up in their father's village, especially if they have married their cross-cousins there, refuse to move back to their matrilineal village. They prefer to remain in their father's matrilineal village where they know people more intimately. In time, as they grow older, the women have daughters who may marry uxorilocally and thus a section of a foreign matrilineage begins to develop in the village.

The village as a social unit is more closely integrated when 593
the children who are living there with their father are still young. 613
They do not yet form a corporate group within the village. 621
Their affairs are supposed to be controlled by their mother's brother, but in fact the headman, who is usually their father or a paternal kinsman, may settle many of their minor difficulties and find medicine for lesser illnesses, without bothering their mother's brother. When the children become adults and begin to assert their own wills the position in the village becomes more unstable. As the daughters grow up and marry, their brothers become their junior marriage sureties. If the mother's brother lives far away, the father of the children may be the senior marriage surety. He still has a personal attachment to his children, but his sons' relationships with him may now become affected by structural elements as they tend to interact, with him and others, in certain situations as representatives of corporate groups. As the village develops a son takes over the position of senior marriage surety to the headman's wife's descendants and he becomes the senior male lineage member, while his sisters' sons begin to take over responsibilities for their sorority-groups.

for witchcraft were carried out by strangling with a piece of calico at a place appointed for the purpose some miles from the chief's village. 674 [696]

There was no case against a man who seduced an unbetrothed girl, the latter being considered entirely at fault. [684]

After divorce, the children always remained with the mother. The man left his wife after the case, saying, "I will take my spear and some of the goats and chickens, but the children will always know their father." [586]

Murder was a question of compensation to the deceased's relatives and was not punished by death. [682]

Stealing was a serious offence but many who were found guilty were rather despised than punished. The thief with the stolen goods tied about his body but otherwise stripped naked would be driven through the village and prodded with sticks to the sound of drums and hoots of derision. Most crimes, however, might be punished by exacting compensation. Payment took the form of goods or slaves. In the case of murder, the accused might have to pay several slaves to the deceased's relatives, and in addition, a fine to the chief for spilling blood, consisting perhaps of one slave. The amount of compensation expected was mentioned by the plaintiff in the case. One of the expressions used was, "My compensation must cover an ant hill," meaning enough slaves, standing hand in hand, to surround an ant hill; ant hills in this country are sometimes very big. If a man had no slaves, he would send his relatives or he himself might be forced to become the slave of the plaintiff. There is a saying anent this practice: [685] 681

Chitumbili wochitawile mchila wakwe!
The monkey they tied (with) tail his (own). [539]

Slaves passed over to a man in payment for crime became free men; they were an addition to the village and might even be adopted in place of a murdered individual. [567]

When compensation was made by the defendant to the plaintiff, the latter always returned some part of it as a sign that friendship was again established.

Goods or money received in compensation for murder, i.e. blood money, might not go for the purchase of food or clothing. Detection of a guilty party by means of magic and proof of guilt or otherwise by ordeal poison are dealt with elsewhere.

Bluffing anyone into giving something for nothing, obtaining goods by false pretence, was not considered a crime, as anyone was "fair game." For instance, a party of youths would waylay a man with [illegible]ad of fish, saying they had been ordered by their headman to commandeer it. If the man parted with his fish, so much the worse for him; if he showed fight, he was respected and friendship made with a give-and-take of fish and snuff. Such bluffing is called *kulpa nsuso*, "to eat with them." To add to their appearance of *bona fides*, the party might have secretly borrowed some well-known article belonging to their headman. 674

IT SHOULD
162 be noted that only 27—11 per cent. of the whole sample of 246 women—had never
589 married and that 23, 80 per cent., of these (or 10 per cent. of the total) were under the age of 20 and therefore stood a good chance of yet marrying. Furthermore, 2 of the 4 women over 20 who had not married were known definitely to be incapable of marrying (one is insane and the other has violent epileptic fits).

There were 53 women who were divorcees or widows (21·5 per cent.), but it should be noted that 27 (or 11 per cent. of the 246 women) were over the age of 45 and therefore were past, or nearly past, the child-bearing period. Those in the younger age-groups stood good chances of remarrying. Table IV shows that though
[586] the divorce rate is high[1] remarriage is common. By the time a woman's child-
[587] bearing period has ended she has been married on the average 1·7 times. Few marriages are contracted after child-bearing ceases.

TABLE IV. *Marriages and Dissolutions of Marriage experienced by all Women over the Age of 13*

162
586
587

Present age	*No. of women*	*No. of marriages contracted*	*No. of divorces experienced*	*No. widowed*	*No. still married*	*No. of marriages per woman*	*No. of divorces per woman*	*No. of marriages per woman ended by death of husband*	*No. of marriages per woman still existing*
13–20	45	22	1	..	21	0·49	0·02	0·00	0·46
20–30	79	104	36	4	64	1·32	0·45	0·05	0·81
30–45	70	121	50	16	55	1·73	0·71	0·23	0·79
Over 45	52	88	29	34	25	1·70	0·57	0·65	0·48
Total	246	335	116	54	165	1·36	0·47	0·22	0·67

842 These statistics, showing the early age of marriage, the early commencement of child-bearing, the high incidence of marriage among women, and the high rate of remarriage during the child-bearing period, all point to the high valuation of reproduction reflected in Yao culture. This is consistent with their social structure,
[182] [61] where the major corporate groups are kinship groups and reproduction is the principal method of recruitment to the group. Furthermore, because the standard of living is almost at subsistence level, children do not entail the economic losses
[593] they do in Western society. On the other hand, they are expected to support their
[888] aged parents when they themselves are economically independent. In other words, there are few factors militating against reproduction and many in favour of it.

554 We may expect the beliefs and customs surrounding child-birth to reflect the value
884 of reproduction. For instance, the Yao distinguish clearly between women who have
[182] borne children and those who have not. When a girl becomes pregnant for the
[842] first time she undergoes a special ceremony (*litiwo*) attended only by women who
[843] have borne children. This ceremony has many of the features of a *rite de passage* and appears to mark the passing of the woman to a new social status. Furthermore, women are ascribed status according to the number of children they have borne. The word *anwali* signifies a young woman who has not yet borne a child; *anwali*

[1] Between a third and a half of the marriages contracted by women had been dissolved by divorce by the time that the child-bearing period had ended.

ndembo, a woman who is pregnant for the first time;[1] *kacembere*, a woman who has one or two children; *mjembere*, a woman who has three or four children, and lastly, *akolwe*, a woman who is past child-bearing age. 554 584

The information which I have been able to collect on abortifacients and contraceptives suggests that they are not used by married people merely to prevent their having more children, but that they are used by people who wish to avoid pregnancies which would be embarrassing, for example, by a woman whose husband is a labour migrant. To what extent the abortifacients and contraceptives are efficacious I cannot say; some, I know for certain, rely on a magical principle, for example, the medicated cord worn by a man during intercourse. On the other hand, the abortifacients taken orally may have some active ingredient. 842

A barren woman or an impotent man is regarded with some embarrassment and the marriage sureties (*acinamangozwe*) of a childless couple will go to considerable trouble and expense consulting diviners and leeches in an attempt to make their wards productive. Childless couples are regarded as not fully adult and are treated in a patronizing way by those who have borne children. Since a man may marry other wives, barrenness in a woman is a cause of sorrow to her husband, but is not in itself a ground for divorce. Where the man is impotent, however, the woman may divorce him on this ground, though she usually takes a paramour and forces her husband to an action for damages which automatically leads to a divorce because it is the usual practice in these cases for the court to ask the woman if she wants to be divorced from her husband. [885] [554] [586] [837] [694]

In contrast to the satisfaction shown at the birth of a child is the sense of awe evinced when a child is still-born or the woman miscarries. The Yao do not distinguish between still-births and abortions, both events being known by the word *kwasanga*. This is a verb and refers to the process of abortion; there is no term for the dead foetus itself. I made no attempt to enumerate miscarriages and still-births because they are supposed to be due to breaches of sexual taboos on the part of the husband and wife, and interviewees were naturally reluctant to mention them. Miscarriages and still-births are greatly feared, and the woman is considered to be in a very dangerous condition until she and her husband have carried out a ritual purification. Should a man have intercourse with a woman who has miscarried and not yet been purified he will contract a disease called *lwaso* which is believed to be invariably fatal. Still-born children or aborted foetuses are buried in a hole dug with sharpened sticks in the bush by the women, whereas children who are born alive and die afterwards are buried in the graveyard in graves dug by men with hoes. The burial spots of still-born babies or aborted foetuses are marked with a stone or broken pottery, since it is believed that to step on them will induce an illness. 845 [783] [753] [766]

The concern of the interested kin-groups is shown in the child-birth procedure. Birth normally takes place in a hut in the presence of the older female relatives of the woman and the female representatives of the man. The husband's representatives are necessary because the Yao, like many other Central African peoples, believe that an adulterine child will not be born to the woman unless she confesses (*kupaca*) the name of the genitor. If she persists in concealing the identity of the genitor, they 844

[1] *ndembo* = elephant, hence ivory. The terms *litiko* and *ndembo* here both refer to the ivory beads traditionally worn by the woman in the pregnancy initiation ceremony. [192] [301]

cipate yearly in the great initiation festival for boys and girls. Consequently as they repeat each year the lessons of their own initiation, the ceremonies are the main vehicle of Yao culture.[1] 881 852

There are also two Moslem ceremonies:

(1) *Jandu*, the boys' Moslem baptism, which takes about seven days, and is usually worked in with *hupanda*: 881 852

(2) *Nsondo*, the girls' Moslem baptism, which is the same as *jandu*, but usually quite separate from *cipatu*. It is important that the wife of a Moslem should have her *nsondo* so that she knows how to prepare the food properly at Ramadan. 177

Menstrual and Other Taboos

Menstruation is held to be dangerous. A special mat is used by the woman during this time, and is rolled up and kept during the rest of the cycle. The hut is completely replastered after menstruation. Intercourse during menses leads to disease of the man. Sexual contact is dangerous to persons at certain other periods: during initiation ceremonies, during mourning, and for babies who have not been through the protective rite. The danger is thought to lie in *ndaka*, a dread disease characterized by swelling. This may be transmitted by salt in the food. Deaths are often attributed to 'salt'. Much of the significance of the mourning is that medicines are prepared which protect the mourners against the dangers attendant on sexual activity. 841 834

Burial Rites

News of a death must be sent to the chief by a messenger carrying a single fowl. The chief gives a present of calico for wrapping the body, and a goat for the burial men. These are called *awilo*, neighbours unrelated to the dead, who volunteer for certain duties. They prepare the body for burial and carry it in procession to the graveyard outside the village. No uninitiated person is allowed to see the funeral. All who attend the burial are prohibited from sexual intercourse for one month. After this time the prohibition is lifted by a ceremony of beer drinking and feasting, and on the following day all fires in the village are extinguished, and then relit, and the mourners are shaved. A year later beer is brewed for a final ceremony. 764 [203] [431]

For a period after her husband's death a widow is unclean, and has to be purified by ritual intercourse with a man who is paid. The widow is not allowed to remarry for two or three years. A widower leaves his wife's village, after receiving a parting gift. The widows of ordinary persons are not inherited. If a man has himself a 'name' (rank and social position), he has an heir, who inherits also the wives of his predecessor. But if the heir (the maternal nephew) has married a cross-cousin (mother's brother's daughter) he would not consider the wife's mother as his inherited wife. 768 589 [587]

Before the burial the dead man's hut used to be destroyed, together with his possessions. Immediately afterwards a consultation is held as to whether retaliatory action against sorcerers is called for. The *awilo*'s duties include not only the conducting of the burial, but also the subsequent inquiry and the conduct of the second ceremony, the beer drinking, at which they shave the mourners. A man who has 764 767

[1] Main sources for girls' initiation: Heckel, 1935, p. 19; Stannus, 1, 1910, pp. 184–7; 4, 1922, pp. 169–74; Stannus and Davey, 1913; Duff, 1903, pp. 312–15; Abdullah, 1919, pp. 16–17; Macdonald, 1882, vol. i, pp. 125–30; Werner, 1906, pp. 126–7; Johnston, 1897, p. 410.

2: Mitchell E-5 (1946-1949) 1956 FT7 Yao FT7

came to the village and in accommodating strangers while he was away. He told them that disputes were to be referred to the headman immediately. Turning to the new headman he said he had to report anything unusual that occurred in the village, and that he was authorized to arbitrate in small cases in his and surrounding villages. 622 537

Kawinga then left the centre of the crowd and went back to where he had been sitting. Then an officiating headman, addressing particularly the women, said, 'Only a few months ago there was a quarrel between the present chief and his elder sisters. These women ran away to Malemia's area in Zomba district without reporting the matter to anyone. This must stop. With effect from to-day any troubles must be brought to the headman without delay: he will settle them. A tree cannot grow without branches and a headman or a chief cannot be known without his people's respect. Do not behave as children. This man cannot do things alone: he must have your help. We leave him in your hands and we do not want to hear about any more trouble. Follow all the instructions the chief has given you.' He took his leave and Nyenje was taken back inside the hut. The people now dispersed to where there was beer and dancing.

The Structural Reincarnation of Village Headmen and Perpetual Relationships

There appear to be a number of significant aspects of the installation ceremonies. First, there is the ritual death and rebirth of the village headman. The heir is 'killed' by a blow with the fist on the forehead, but is reborn the headman. The Yao do not believe that the spirit of the headman is inherited by the heir;[1] he has only eaten the name.[2] But socially he is born again and, logically consistent with this idea, he takes the wives of his predecessor without further marriage negotiation. He also takes over the property of the dead man, his clothes and his huts. 622 829 [587 428]

But this structural reincarnation of the headman has the important implication that the headman is immortal. He shares this characteristic with the group of which he is the leader. When 622 829 601

[1] As the Bemba do. A. I. Richards, 'Mother-right among the Central Bantu' in E. E. Evans-Pritchard and others, *Essays Presented to C. G. Seligman*, Kegan Paul (London, 1933).

[2] *Kulya lina* is a synonym for succeeding to headmanship.

3: Stannus D-5 (ca. 1912) 1922 FT7 Yao FT7

585 drum of her married life begins. The man and woman live together peaceably enough as
a rule, each attending to his own sphere of work. The man builds the house, the woman
462 mends the floors; she sweeps and cooks, she is the hewer of wood and drawer of water. The
man hunts, fishes, makes mats, baskets, the grain store, game traps, and bark-cloth; he
looks after the tobacco, and makes the snuff, while his wife brews the beer. He it is who
fashions the gourd vessels and carves the spoons, while the woman is the potter (Pl. III, 4)
and pipe-maker. Together they hoe and together they harvest, but to the woman falls the
monotonous drudgery of pounding and sifting the corn for flour.

842 The Yao have a custom like that of the Anyanja. A sister brings to the house of the
newly wedded pair a log of green wood from a *mbanga* tree which is very hard; the log
[522] may be two feet in diameter and four feet long. Should the bride not become pregnant
before it is burned away, the husband is laughed at and they may both be teased by having
[558] many logs brought to the house. A man who has no children is much despised and there
is a saying, "He must have eaten some ground-nuts," punning on the word for a thick-
skinned variety of ground-nut, *chimbawila*, a word which also means sterility. An impotent
[837] man may, with the consent of his wife, introduce some male friend into the house, any
children born in consequence being claimed as the husband's. He usually chooses some
friend from a distance to obviate any attachment springing up between him and the wife.
Two married couples may, all consenting, exchange consorts for the night, but they never
live together like this for long periods.

582 There is one well-defined marriage taboo; a man may not marry a woman of his own
clan. In the old days, he was also restricted to his own tribe, except in the case of slave
[611] wives and wives by capture. Since the clan is inherited from the mother,[1] a man may not
marry the daughters of his maternal aunts, but he may marry his other female cousins.
[587] He may not marry two sisters nor a deceased wife's sister; neither do two brothers marry
two sisters.

595 The number of wives is limited only by the husband's ability to provide for them. In
addition to free wives, a man might formerly have a number of slave wives. The head wife
is called *kunyeto*, the other wives, *mangumba*. The word given by Macdonald, *akunyeto*,[2]
meaning the junior wives, is a Chinyanja word and, I think, wrongly applied.

582 It has been said that a man always marries into the village of his wife. For this reason,
[642] female children are always prized as it means an increase in the number of able-bodied
men added to the village. In rare cases, the wife might be taken to the husband's village,
[583] as is the Anyanja practice.[3] This, of course, is true in the case of chiefs and headmen. Here,
we may also note that no payment is made for the wife and no dowry is received with her.

584 To revert to betrothal, occasionally the sponsors will not agree to the marriage and a
843 runaway match takes place, but in the end, the marriage is usually regularised by the
sponsors coming to an agreement. If, however, the woman has in the meantime become

[1] Vide infra, p. 262. [2] Op. cit., p. 134. [3] Stannus, op. cit., p. 309.

3:Stannus D-5 (ca. 1912) 1922 FT7 Yao FT7

pregnant, the meeting of the sponsors will have to be postponed until after the ceremony 584
connected with her first quickening with child, *Litiso*.[1] This ceremony must be performed 843
whether the girl is regularly married or not. One party cannot ask the other for permission that both ceremonies take place at the same time. The answer would be given, "You are asking me to kill two beasts with one bullet." In rare cases, the *chief* may sanction the marriage and *Litiso* ceremonies taking place at about the same time, i.e. the marriage is arranged before the child is born.

Widowhood. A widow is considered unclean for a period after the death of her husband. 589
She wears a band of palm-leaf or string around her forehead. When the period is passed 587
and some man wishes to marry her, arrangement is made with some other man to cohabit 833
with her for payment; she is then said to be clean and can go to her prospective husband. This ceremony is called *kutema ngonji*, "to cut the strings," or in Chinyanja, *ku-dula nkasa*, "to cut the palm"; unless it is performed, the new husband will sicken. The man introduced for the purpose is called by the Yao, *kitumu*, the "kyasma," "he who comes by night."

Divorce. From time to time, married people disagree and one deserts the other. If the 586
woman leaves the man, he has a claim against her and the man to whom she goes for all the clothes he has supplied her with during their married life. The husband usually sides with the wife's relatives and arranges that they look after the children; he does not claim them. When the husband and wife mutually wish to separate, they both meet with their sponsors and everything is duly arranged. The husband will give his wife an arrow, saying, "*Mpumbe* (the arrow)," meaning, "If I come back, may it kill me." The place of the arrow may be taken by a bullet or any other object, even a piece of grass. The man will add, "*Swaka, swaka, na likowa!* (rattling, rattling, it is a rat!)," inferring that if his wife hears something rattling in the house, it is a rat, not himself trying to come back. There is no definite payment of compensation. If the woman marries again, she presents the "arrow" to her second husband as a sign that she has been freed from her first marriage; without this token, no man would marry her.

Actual adultery was in the old days very rare owing to the strict enforcement of rules, 684
and the case of a woman demanding divorce on account of the adultery of her husband 586
formed a *causa célèbre*. The case heard by the *chief* would last for days and hundreds of people would come to listen. Neighboring Anyanja pleaders would be invited to speak and great excitement prevailed, as these latter would be accompanied by their villagers, who, to the accompaniment of continuous drumming, would sing, "*Mbawala anakodwa m'nkonde*,[2] (The bush-buck has run his head into the net)," while they ran about running their heads into their game-nets.

Other causes of separation are neglect of duty, sterility of the wife, and habitual death 586
of the children born.

[1] Vide infra, p. 274.

[2] Chin.

3: Stannus D-5 (ca. 1912) 1922 FT7 Yao FT7

then listens to an account of the circumstances attending the illness and death. The point 768
at issue is whether there is any evidence pointing to death from unnatural causes which 632
requires consulting a diviner. The chief practically always agrees with the relatives, and it is said that he will never press them to go to the *wachisongo* unnecessarily. The case may end with this conference, or here may begin the long series of events described under *usuwi*.[1]

During the month subsequent to the funeral, certain taboos have to be observed. The 765
widow may not bathe, and with the exception of the *ewilo*, all who attended must refrain 768
from sexual intercourse. At the expiration of this period, beer is brewed in the village, and all the friends and relatives are again summoned. This beer-drinking is called "the beer of rottenness," or "the beer of resignation." In addition to the beer, food is provided, and everyone helps himself without ceremony. *Chindimbo* is sung and danced and at the present day, bands of trained dancers attend, including *ching'wengeng' wenge*.[2] A pot of beer is sunk into the ground, marking the site of the dead man's house. The night of *muteputa*[3] [833]
sees husbands and wives reunited, and the widow may go through ceremonial intercourse with a man appointed for the purpose called *lituwa* or *ubilo*. Sometimes the widow refuses *lituwa*, and is given medicine instead to cleanse her; her body is then no longer "hot" and likely to bring disease to those about her. A widow does not marry again for two or three 587
years. A young man who loses his wife has no longer any standing in her village after 768
muteputa. He is usually given a present, with the suggestion that he go elsewhere. After the death of an infant, the mother is considered unclean. She sleeps on a mat apart from her husband till after the ceremony of shaving, and then undergoes a ceremonial coitus with her husband — in which case he is called *lituwa* — after which, ordinary cohabitation is resumed. If she has been a widow, or if the child was born "with disease,"[4] another man acts as *lituwa*.

The morning following *muteputa*, all the fires in the village are extinguished. A fresh 769
blaze is then kindled with the fire-drill, *lumanya*, either in the chief's house or in some spot [372]
nearby, and from there, fire is carried to all the houses. The ashes of the old fires, the stones supporting the cooking pots, and the porridge sticks are taken to the cross-roads, [302]
and there destroyed. Everyone then shaves all his own hair, head, axillae, and pubis. The custom of the second shaving by the *ewilo*, described in *Africana*,[5] is, I think, an adaptation from the Anyanja. A year later, beer is again brewed, and all the relatives summoned to the village to partake of it. There is dancing, but no ceremony.

The Yao bury their dead in regular graveyards in wooded country, the thicker the 764
forest the better, often two or three miles away from a group of villages. Different villages bury their dead in different parts of the burial ground; relatives are usually buried near one another. Graves are never revisited, and no one would enter a graveyard except at the 769
time of a funeral, and then only after obtaining permission from the chief. Such spots are

[1] Vide infra, p. 396.
[2] Vide infra, p. 370 and [illegible].
[3] Beer-drinking.
[4] Vide infra, p. 396.
[5] Macdonald, op. cit., p. 111.

6: Mitchell E-5 (1946-1947) 1949 FT7 Yao FT7

162 IT SHOULD
589 be noted that only 27—11 per cent. of the whole sample of 246 women—had never married and that 23, 80 per cent., of these (or 10 per cent. of the total) were under the age of 20 and therefore stood a good chance of yet marrying. Furthermore, 2 of the 4 women over 20 who had not married were known definitely to be incapable of marrying (one is insane and the other has violent epileptic fits).

There were 33 women who were divorcees or widows (11·3 per cent.), but it should be noted that 27 (or 11 per cent. of the 246 women) were over the age of 45 and therefore were past, or nearly past, the child-bearing period. Those in the younger age-groups stood good chances of remarrying. Table IV shows that though
[586] the divorce rate is high[1] remarriage is common. By the time a woman's child-
[587] bearing period has ended she has been married on the average 1·7 times. Few marriages are contracted after child-bearing ceases.

TABLE IV. *Marriages and Dissolutions of Marriage experienced by all Women over the Age of 15*

162
586
587

Present age	No. of women	No. of marriages contracted	No. of divorces experienced	No. widowed	No. still married	No. of marriages per woman	No. of divorces per woman	No. of marriages per woman ended by death of husband	No. of marriages per woman still existing
15–20	45	22	1	..	21	0·49	0·02	0·00	0·46
20–30	79	104	36	4	64	1·32	0·45	0·05	0·81
30–45	70	121	30	18	33	1·73	0·71	0·25	0·79
Over 45	52	88	19	34	15	1·70	0·37	0·65	0·28
Total	246	335	106	56	163	1·36	0·43	0·22	0·67

842 These statistics, showing the early age of marriage, the early commencement of child-bearing, the high incidence of marriage among women, and the high rate of remarriage during the child-bearing period, all point to the high valuation of reproduction reflected in Yao culture. This is consistent with their social structure,
[182] [61] where the major corporate groups are kinship groups and reproduction is the principal method of recruitment to the group. Furthermore, because the standard of living is almost at subsistence level, children do not entail the economic losses
[593] they do in Western society. On the other hand, they are expected to support their
[608] aged parents when they themselves are economically independent. In other words, there are few factors militating against reproduction and many in favour of it.

554 We may expect the beliefs and customs surrounding child-birth to reflect the value
884 of reproduction. For instance, the Yao distinguish clearly between women who have
[182] borne children and those who have not. When a girl becomes pregnant for the
[842] first time she undergoes a special ceremony (*ititée*) attended only by women who
[843] have borne children. This ceremony has many of the features of a *rite de passage* and appears to mark the passing of the woman to a new social status. Furthermore, women are ascribed status according to the number of children they have borne. The word *awwali* signifies a young woman who has not yet borne a child; *awwali*

[1] Between a third and a half of the marriages contracted by women had been dissolved by divorce by the time that the child-bearing period had ended.

11:Sanderson D-5 (ca. 1920) 1920 FT7 Yao FT7

601 408 knows that he is not legally justified in "entering into the name" is loath to do so, as he knows that he is not expected to make a successful chief. The defeat of Salima, the fifth Makanjila, by the British in 1895 was, and still is, ascribed to the fact that he belonged to the male line.

The term *chipwa* (*mwipwanwa*, "his *chipwa*") may be used for any child of a sister. A female title (common amongst the Yaos) descends to the eldest daughter of the eldest son of the bearer of the title.

589 601 *Marriage.*—Relatives who are forbidden to marry are called *mkidwanda*; they include all those given in the table except *mdzwa*, *mkiswanda* ("grandchildren"), and the wife of the maternal uncle. An heir, on succeeding, may marry the wife or wives of his maternal uncle, but not if he has previously married one of his daughters.

It is legal, though rare, for a man to marry the daughter of his own child (*chiswanda*).

614 601 "*Brothers*" *and* "*Sisters*."—The term *ulongo* is used to describe an exogamous clan, and the members are known as *ulongo* (singular) *wakulongo* or *da chilongo*, collectively. This word *ulongo* is probably a corruption of *wa ulongo* ("in the clan") as it requires the use of the term *wjakwe* (*ajwe*) "a companion," instead of the possessive pronoun. Thus *ulongo wjakwe* (*wakulongo ajwe*), "his (their) clan relatives" (instead of *ulongo jwakwe*, *wakulongo wwe*).

601 There is no general term corresponding to the English "brother." The nearest is *ndondo*, which describes the relationship between a "brother" and a "sister," it is rarely used by women, however.

The elder "brother" of a man is called *ndolo* or *mkimwenye*. These terms are used for all sons of a father's elder "brother" or of a mother's elder "sister," and for the elder brother by the same parents. They are also used by a woman for any "brother," elder or younger, senior or junior, in preference to the term *ndondo*.

Mpanyagu is used for a son of a father's younger "brother" or of a mother's younger "sister," and for a younger brother by the same parents. It is used by a woman for her "sisters" in exactly the same way, but is never used by a woman of a man.

A man calls his "sister" *chwanali*, collectively, *mwanjwanu chwanali*; a girl refers to an elder, or senior "sister," by means of the same term; a man refers to a "sister" as *alondewanga* or *ne chwanali*.

The term *chiswanda* is used for a "grandchild" (*mwiswandewanga*, "my 'grandchild'").

"*Father*" *and* "*Mother*."—A paternal aunt is distinguished as *atati mukungwe* ("female father") if necessary, though she is, of course, not addressed as such. The elder brother of a father is referred to as *atati mukulungwe* ("the great father"), his younger brother as *atati wanandi* ("the little father"). Other relatives are similarly distinguished.

11: Sanderson D-5 (ca. 1920) 1920 FT7 Yao FT7

The alternative term, *ssae*, common to nearly all Bantu languages, is usually reserved for "own father," but not always. 601

Latterly, though the relationship is really *ahuqe*, the husbands of a man's "daughters" or "grand-daughters" are called *atati*—in a complimentary sense, not of course in defining relationship.

The word *ahuqe* is rapidly falling into desuetude for men, and is, nowadays, never used in speaking to a man of that relationship, though used freely as a mode of address to women.

Amao (or *achilulu-ssaqu*, *-ssae*, etc., "my, his mother") may be further defined as "great" or "little" in the same manner as *atati*.

The parents of any *atati* or *amao*, and those of one's wife are called *nahuje* ("grandparent"). Great-grandparents are specified as "father" or "mother of my grandfather (or mother)."

The founder of a family is called *Likolo*, especially in prayer—except for the augmentative prefix obviously the same word as *Nsapolo*, "a parent," which includes all "fathers" and "mothers." [119]

It is curious in this connection that a name for little girls in general, if one does not know their real name, is *chikolo*. All these words seem to be derived from *-kola* ("have," "possess"), and refer, probably, either to actual or potential possession of offspring.

Achiasapolo are distinguished as "male" or "female" according as they belong to the father's or mother's side—irrespective of their own sex.

Conclusions.—The Yao nomenclature of relationships, bearing as it does the evidence of former group marriages, is, like other classificatory systems, gradually changing in conformity with the development of the race, so that it can be used to express consanguinity; Rivers has, I believe, called attention to this process. 601 198 [101]

The Yao custom—now dying out—of lending one's wife to a visitor (usually a close friend) may be a remnant of ideas carried on from communal marriage, though such a privilege is never given to a relative. [834] [94]

In the same way's man who has had no children (a great stigma) may request his friend to help him—he will never ask a relative—and all of the three parties will keep the secret of the true paternity of any children resulting. [83] [94]

In many tribes the marriage of brother and sister, or a man with his sister's child, is permitted to compensate for the law by which a man's property goes to the son of a stranger, but nothing of the kind is allowed among the Yaos. Indeed, they view any incestuous union with particular horror, and such must be very rare. I have heard of a case of a man committing incest with the idea that he would thereby become endued with supernatural power, but all he gained was ostracism; in the old days he would have been burned. 588 835 [101]

1: Tew E-4 (no date) 1950 FT7 Yao FT7

ciputo yearly in the great initiation festival for boys and girls. Consequently as they repeat each year the lessons of their own initiation, the ceremonies are the main vehicle of Yao culture.[1]

There are also two Moslem ceremonies:

(1) *Jando*, the boys' Moslem baptism, which takes about seven days, and is usually worked in with *lupande*:

(2) *Nsondo*, the girls' Moslem baptism, which is the same as *jando*, but usually quite separate from *ciputo*. It is important that the wife of a Moslem should have her *nsondo* so that she knows how to prepare the food properly at Ramadan.

Menstrual and Other Taboos

Menstruation is held to be dangerous. A special mat is used by the woman during this time, and is rolled up and kept during the rest of the cycle. The hut is completely replastered after menstruation. Intercourse during menses leads to disease of the man. Sexual contact is dangerous to persons at certain other periods: during initiation ceremonies, during mourning, and for babies who have not been through the protective rite. The danger is thought to lie in *ndaka*, a dread disease characterized by swelling. This may be transmitted by salt in the food. Deaths are often attributed to 'salt'. Much of the significance of the mourning is that medicines are prepared which protect the mourners against the dangers attendant on sexual activity.

Burial Rites

News of a death must be sent to the chief by a messenger carrying a single fowl. The chief gives a present of calico for wrapping the body, and a goat for the burial men. These are called *ansile*, neighbours unrelated to the dead, who volunteer for certain duties. They prepare the body for burial and carry it in procession to the graveyard outside the village. No uninitiated person is allowed to see the funeral. All who attend the burial are prohibited from sexual intercourse for one month. After this time the prohibition is lifted by a ceremony of beer drinking and feasting, and on the following day all fires in the village are extinguished, and then relit, and the mourners are shaved. A year later beer is brewed for a final ceremony.

For a period after her husband's death a widow is unclean, and has to be purified by ritual intercourse with a man who is paid. The widow is not allowed to remarry for two or three years. A widower leaves his wife's village, after receiving a parting gift. The widows of ordinary persons are not inherited. If a man has himself a 'name' (rank and social position), he has an heir, who inherits also the wives of his predecessor. But if the heir (the maternal nephew) has married a cross-cousin (mother's brother's daughter) he would not consider the wife's mother as his inherited wife.

Before the burial the dead man's hut used to be destroyed, together with his possessions. Immediately afterwards a consultation is held as to whether retaliatory action against sorcerers is called for. The *ansile*'s duties include not only the conducting of the burial, but also the subsequent inquiry and the conduct of the second ceremony, the beer drinking, at which they shave the mourners. A man who has

[1] Main sources for girls' initiation: Hachet, 1935, p. 19; Swanson, 1, 1910, pp. 184–7; 4, 1911, pp. 184–92; Swanson and Dawe, 1913; Duff, 1903, pp. 310–13; Abdullah, 1919, pp. 16–17; Macdonald, 1882, vol. 1, pp. 125–30; Werner, 1906, pp. 126–7; Johnston, 1897, p. 470.

3:Stanner D-5 (ca.1912) 1922 FT7 Yao FT7

pregnant, the meeting of the sponsors will have to be postponed until after the ceremony connected with her first quickening with child, *Litiwo*.[1] This ceremony must be performed whether the girl is regularly married or not. One party cannot ask the other for permission that both ceremonies take place at the same time. The answer would be given, "You are asking me to kill two beasts with one bullet." In rare cases, the chief may sanction the marriage and *Litiwo* ceremonies taking place at about the same time, i.e. the marriage is arranged before the child is born. 584 843

Widowhood. A widow is considered unclean for a period after the death of her husband. She wears a band of palm-leaf or string around her forehead. When the period is passed and some man wishes to marry her, arrangement is made with some other man to cohabit with her for payment; she is then said to be clean and can go to her prospective husband. This ceremony is called *kuwwa ngwji*, "to cut the strings," or in Chinyanja, *ku-dula mkasa*, "to cut the palm"; unless it is performed, the new husband will sicken. The man introduced for the purpose is called by the Yao, *Mwen*, the "hyaena," "he who comes by night." 589 587 [835]

Divorce. From time to time, married people disagree and one deserts the other. If the woman leaves the man, he has a claim against her and the man to whom she goes for all the clothes he has supplied her with during their married life. The husband usually sides with the wife's relatives and arranges that they look after the children; he does not claim them. When the husband and wife mutually wish to separate, they both meet with their sponsors and everything is duly arranged. The husband will give his wife an arrow, saying, "*Mpamba* (the arrow)," meaning, "If I come back, may it kill me." The place of the arrow may be taken by a bullet or any other object, even a piece of grass. The man will add, "*Swaka, swaka, na likwasi* (rattling, rattling, it is a rat)," inferring that if his wife hears something rattling in the house, it is a rat, not himself trying to come back. There is no definite payment of compensation. If the woman marries again, she presents the "arrow" to her second husband as a sign that she has been freed from her first marriage; without this token, no man would marry her. 586

Actual adultery was in the old days very rare owing to the strict enforcement of rules, and the case of a woman demanding divorce on account of the adultery of her husband formed a cause célèbre. The case heard by the chief would last for days and hundreds of people would come to listen. Neighbouring Anyanja headmen would be invited to speak and great excitement prevailed, as these latter would be accompanied by their villagers, who, to the accompaniment of continuous drumming, would sing, "*Mbawala anakodwa m'ukonde*,[2] (The bush-buck has run his head into the net)," while they ran about running their heads into their game-nets. 584 586

Other causes of separation are neglect of duty, sterility of the wife, and habitual death of the children born. 586

[1] Vide infra, p. 274. [2] Chin.

6: Mitchell E-5 (1946-1947) 1949 FT7 Yao FT7

162 589 be noted that only 27—11 per cent. of the whole sample of 246 women—had never married and that 23, 80 per cent., of these (or 10 per cent. of the total) were under the age of 20 and therefore stood a good chance of yet marrying. Furthermore, 2 of the 4 women over 20 who had not married were known definitely to be incapable of marrying (one is insane and the other has violent epileptic fits).

There were 53 women who were divorcees or widows (21·5 per cent.), but it should be noted that 27 (or 11 per cent. of the 246 women) were over the age of 45 and therefore were past, or nearly past, the child-bearing period. Those in the younger age-groups stood good chances of remarrying. Table IV shows that though [586] the divorce rate is high[1] remarriage is common. By the time a woman's child- [587] bearing period has ended she has been married on the average 1·7 times. Few marriages are contracted after child-bearing ceases.

TABLE IV. *Marriages and Dissolutions of Marriage experienced by all Women over the Age of 15*

162 586 587

Present age	No. of women	No. of marriages contracted	No. of divorces experienced	No. widowed	No. still married	No. of marriages per woman	No. of divorces per woman	No. of marriages per woman ended by death of husband	No. of marriages per woman still existing
15–20	45	22	1	..	21	0·49	0·02	0·00	0·46
20–30	79	124	36	4	84	1·32	0·45	0·05	0·81
30–45	70	121	30	16	55	1·73	0·71	0·23	0·79
Over 45	52	88	19	34	25	1·70	0·37	0·65	0·48
Total	246	355	116	54	185	1·56	0·47	0·22	0·67

842 These statistics, showing the early age of marriage, the early commencement of child-bearing, the high incidence of marriage among women, and the high rate of remarriage during the child-bearing period, all point to the high valuation of reproduction reflected in Yao culture. This is consistent with their social structure, [182] [61] where the major corporate groups are kinship groups and reproduction is the principal method of recruitment to the group. Furthermore, because the standard of living is almost at subsistence level, children do not entail the economic losses [593] they do in Western society. On the other hand, they are expected to support their [608] aged parents when they themselves are economically independent. In other words, there are few factors militating against reproduction and many in favour of it.

554 We may expect the beliefs and customs surrounding child-birth to reflect the value 884 of reproduction. For instance, the Yao distinguish clearly between women who have [182] borne children and those who have not. When a girl becomes pregnant for the [842] first time she undergoes a special ceremony (*litiée*) attended only by women who [843] have borne children. This ceremony has many of the features of a *rite de passage* and appears to mark the passing of the woman to a new social status. Furthermore, women are ascribed status according to the number of children they have borne. The word *aawali* signifies a young woman who has not yet borne a child; *aawali*

[1] Between a third and a half of the marriages contracted by women had been dissolved by divorce by the time that the child-bearing period had ended.

1: Tew E-4 (no date) 1950 FT7 Yao FT7

342 Yao make square houses.[1] Panelled doors and glass windows, deck-chairs and palm
177 furniture are becoming more and more popular. The men wear long Moslem robes
[29] and the women are clothed in cotton. In the rural areas there are usually a few craftsmen who still ply their trades as carpenters and blacksmiths, though the latter no
326 longer smelt, but use scrap-iron.

Labour Migration

162 Statistics are not available for the Yao of Portuguese East Africa or Tanganyika
464 Territory. Yao constitute 34 per cent. of the total population of South Nyasa district, 15 per cent. of upper Shire, 11 per cent. of Blantyre and Zomba.[2] The proportion of labour migrants in these districts was in 1937 as follows:[3]

District	*Adult males fit to work*	*Percentage of emigrants*	*Number producing economic crops*	*Number of subsistence producers*	*Emigrants not heard of since 1930*
South Nyasa .	24,230	27·1	2,912 (12%)	12,025 (49%)	873
Upper Shire .	24,673	15·9	2,555 (10%)	16,629 (67%)	255
Blantyre . .	25,330	15·6	3,788 (15%)	10,165 (40%)	986
Zomba . .	26,679	12·4	7,720 (29%)	9,040 (33%)	553

[134] South Nyasa district, which is unfertile waterless bush with a long history of famine and food shortage, has the highest proportion of labour migrants. Upper Shire, though not fertile, is more prosperous, benefiting from the tobacco- and cotton-growing industries, and from the dried-fish trade.[4]

SOCIAL ORGANIZATION AND POLITICAL STRUCTURE[5]

Kinship and Local Grouping

611 Among the Yao succession is matrilineal and marriage mainly matrilocal. Accord-
[207] ing to some informants succession formerly passed down the line of brothers, as with the Bemba, but it now passes direct to the eldest sister's eldest son, or to descendants of other sisters in order of seniority.[6] Chiefly succession follows the same rule, but the most senior may be set aside for a more suitable candidate.[7]

611 Clan names, *lukoya*, are inherited matrilineally, and formerly designated exogamous
614 units,[8] but the marriage prohibition has now ceased to operate. Holders of the same clan name are unable to trace descent from a common ancestress, and for commoners clan names seem to have quite lost their significance; they are, however, carefully remembered in the chiefly lines and in other lines of hereditary rank, such as village headmen.

614 Within the general kinship grouping of the clan, a smaller group is recognized,
613

[1] Werner, 1906, p. 144; Macdonald, 1882, vol. i, pp. 20–2, describes a round hut.
[2] 1931 Census information is taken because the district boundaries were changed between 1931 and 1945, so that the information in the 1945 Census would not be susceptible of comparison with that given in the 1937 Survey of Male Adult Population in the *Bell Report*, Appendix A.
[3] *Bell Report*, 1938, Appendix A.
[4] Smith, 1937.
[5] Information, unless otherwise stated, is from Mitchell, and relates to south Nyasaland Yao.
[6] Johnston, 1897, p. 471; Meredith Sanderson, 1912, p. 370. Cf. Macdonald, 1882, vol. i, p. 187, who says that brothers inherit before sister's son.
[7] Ibid., p. 189.
[8] Stannus, 4, 1912, p. 236.

libele (plur. *mabele*), a breast. This includes all who are supposed to be descended 614
from a common ancestress. Often the direct line of descent from the founding 613
ancestress is not known for more than three or four generations. The small groups
which can definitely claim to be 'of one breast' constitute the distinct matrilineal [621]
groups which live together in separate hamlets within a village. Each is undifferentiated
in relation to other matrilineal groups, but internally each is differentiated on the
principle of sibling unity.

The main emphasis of the kinship system is on the bond between a man and his 593
sisters. Their relationship is summed up in the word *mbumba* (translated by Mitchell
as 'sorority group'). A man speaking of his *mbumba* refers to all the women he calls 602
sister, their daughters, and their daughters' daughters. Strictly speaking, female kin
in the ascending generations are excluded, as belonging to the *mbumba* of his mother's
brother. The 'warden' of a sorority group, *ayene mbumba*, is the senior of the brothers
and is responsible for the behaviour of the women in his charge; he appears for them
in court and pays fines on their account. He plays an important part in the marriage
negotiations. It is his duty to consult the diviner if his sister or her child falls ill, and
to be chief mourner at the funeral of either of them, also providing medicine for the
ritual purification at the end of the mourning period. Formerly these obligations were
balanced by certain rights. He could sell some of them into slavery for his own
personal reasons. This privilege is ended, but even to-day it is through his sorority
group that a man achieves status and independence.

The principle of sibling unity is expressed in many other ways. A man and his 601
sister reciprocally call each other *ahumbuangu*. More usually, a woman calls her 602
brother, older or younger than herself, *acimweni* (a term of respect usually applied to
a chief), for any brother may be regarded as warden of her sorority group. A man has
the same duties to his younger brothers as to his sisters, so they also call him *acimweni*,
but he calls them *mpwange* 'younger brother', as they can never be in the position
of warden in relation to him. Maternal uncles are called *ahwehume*, and a sister's
son *cipwa*.

Within each matrilineal descent group, differentiation takes place between members 602
according to whether they are siblings or not. A man's sorority group included ideally 593
his own siblings and their female matrilineal descendants. His sister's daughters are
also the sorority group of his sister's son, their brother, so that any woman can belong
at any one moment to the sorority groups of her brother, her mother's brother, her
mother's mother's brother, &c., but the effective one is that of her own brother, if
adult. He is consulted first in small disputes, and at the marriage ceremony each party
is represented by a brother as well as by a mother's brother. In the break-up of a
hamlet (described below, p. 12), siblings tend to hold together more closely than
cousins and to form groups of their own, so that each woman in the descent line is a
potential point of cleavage. Tension between brothers as they compete for control of [579]
the sorority group is a source of friction within the sibling group which eventually
leads to its disruption.

Since marriage is mainly matrilocal, and extra-village, the husband in his wife's 591
village is seen as a stranger by all the members of her matrilineal descent group.
There is a tendency for members of such descent groups to live together in a cluster 621
of huts. The word 'hamlet' is used by Mitchell to indicate a cluster of huts, in which 614

1: Tew E-4 (no date) 1950 FT7 Yao FT7

621 every adult member is a matrilineal descendant of a single ancestress, or a spouse of
614 one of these people. All husbands are called *alamu* by the male members of the descent group, but husbands call each other by the kinship terms for older and younger
[601] brother (i.e. *acimwemi* or *mpwanga*) according to the seniority of their wives. Similarly undifferentiated in kinship terms are the wives of all men of the descent group, who call each other 'sister'.

591 The husband is expected to work in his wife's garden, to help his mother-in-law,
606 and also, in the early stages of marriage, to avoid her. His attitude to his father-in-law is one of respect, relaxing as time goes on. His attitude to his wife's brother is also one of respect, which covers feelings of latent hostility. Although husband and wife's brother co-operate in affairs relating to the woman and her children (e.g. they jointly consult the diviner in case of illness, and the brother-in-law hears grievances the husband may have against his wife), there are elements of conflict arising from their competition for the affection of the woman and her children.

591 Patrilocal marriages are the rule in certain cases. The village headman commonly
622 has his wife in his own village. At his death his widow may return to her own village,
613 but if her daughters have married locally she may stay, and one of her sons, as warden of his sisters, will also stay and marry patrilocally, as did his father, the headman.
621 Thus a new matrilineal descent group, linked to that of the headman by a patrilineal link, develops. In every generation the number of separate but related matrilineal descent groups would double, and at such a rate of proliferation it might be expected that any village would contain many family groups. In fact, however, most members of a village can trace their descent from a common ancestress removed not more than about five generations. There are two reasons for this degree of homogeneity in the kin-grouping in the villages. One is that the villages tend to split up as they become
[582] too large and complex. The other is that the introduction of a new matrilineal descent group is often avoided by a cross-cousin marriage by the headman of the village or the warden of a sorority group.

605 There is a joking-relationship between cross-cousins, that is, for example, between the village headman's children and his sisters' children. The latter, as members of his
582 descent group, have interests and loyalties opposed to those of his own children. Although there is a strong tradition of cross-cousin marriage, such marriages are said to be likely to be unstable.

Betrothal and Marriage

584 Child betrothal was common among the Yao. Acceptance of a loin-cloth and the wearing of it was token of betrothal, giving the groom exclusive rights over the girl.[1] The negotiations for an adult marriage are conducted by senior matrilineal kinsmen of the parties, who at the subsequent ceremony act as witnesses or sureties to the marriage. Usually the senior is the mother's brother, and the junior the brother. The
585 act of validation, the *Cingwane* rite, takes place some time after the husband and wife have been living together. They meet in the hut of the woman for the rite, which consists in eating two pots of porridge, prepared by the female relatives of each party. The man's people bring a cockerel and the woman's a hen for relish. The exchange of food symbolizes the exchange of members of each matrilineal kin group, which is

[1] Macdonald, 1882, vol. i, p. 118; Johnston, 1897, pp. 411–13.

2: Mitchell E-5 (1946-1949) 1956 FT7 Yao FT7

economic centre of Southern Nyasaland and much land has been alienated to Whites there. Liwonde area, which has only 30·7 to the square mile, has large parts that are unpopulated because of the lack of surface water on the escarpment of the Rift Valley.

This population is by no means homogeneous, tribally or linguistically, but culturally the tribes are all very similar. The Yao, Nguru and Nyanja, who comprise most of the population, live in villages under village headmen; marry uxorilocally; have similar practices and beliefs in sorcery and disease. Table II

TABLE II

TRIBAL COMPOSITION OF THE CHIEFDOMS: 1945

Chiefdom	Total Population	Percentages of Tribes			
		Yao	Nguru	Nyanja	Ngoni
Jalasi	40,287	81·3	12·4	5·9	0·2
Nyambi	7335	73·2	26·8	0·0	0·0
Kawinga	44,789	48·7	35·7	14·4	1·2
Liwonde	12,176	75·2	19·6	5·2	0·1
Malemia	12,448	75·1	9·6	13·7	1·6

Source: Nyasaland Census, 1945. Abstracted from the detailed returns at the District Commissioner's Offices at Zomba and Fort Johnston.

shows the tribal make-up of the five areas with which I am concerned. Three-quarters of the population in all these areas are Yao. In Kawinga area, in which non-Yao tribes are most numerous, only one-half of the people are Yao, but included in this area are the two Mpotola subordinate chieftains Ngokwe and Chikweo, whose followers are predominantly Nguru (42·7 and 55·7 per cent).[1] If we exclude these two chiefdoms, the proportion of Yao in the rest of Kawinga area is 55·6 per cent. Nyambi and Kawinga areas, lying as they do against the Portuguese East African boundary, have the greater proportion of Nguru. Within Kawinga area the concentration of the Nguru along the boundary is also shown. Chiwalo chiefdom, which lies to the west of Kawinga area, has only 15 per cent Nguru,

[1] It seems here that the Mpotola may have been enumerated as Nguru and Nyanja.

[text continues on p. 16]

2: Mitchell E-5 (1946-1949) 1956 FT7 Yao FT7

brought out of the hut, as always, songs were sung and speeches were made. One of the songs was : 'A tree when it grows, grows with its branches.'[1] This is a reference to the dependence of the village headman upon the increase of his relatives for an increase in his rank. The Yao compare kinship with a tree, the component segments of the maximal lineage (the tree) being the branches. Then one of the officiating headmen mentioned that there were many sisters' sons of the old Mapata but that Kawinga and Chiwalo had selected the one on the chair to be the headman. He then exhorted the others neither to be jealous nor to resort to sorcery, but to exalt the name[2] that it might live long. This was followed by a song which introduced a second theme, 'A husband however rich he becomes here, cannot climb high.'[3] This song emphasizes that the uxorilocal husbands of the village can never achieve rank outside their own matrilineal villages however rich they are. The officiating headman then went on to say that some women rebuke their husbands when they speak subversively, but others side with them against the village headman. He told the husbands and women that they were wrong to do this and that they must desist. After this followed a public rebuke of the village as a whole. One of the younger brothers of the new headman pointed out that when the mother of the previous Mapata had died she had been buried in the graveyard and not in the village. He rebuked the villagers and told them that, when the present chief died, he should be buried in the village. A man who had been charged with neglect by his wife (his cross-cousin) paid the headman the compensation which he had refused to pay to her. One of the headmen then exhorted the villagers to respect their headman ; to send someone to accompany him on his journeys to see to his wants ; never to allow the headman to carry a gift he had been given, and so on. The ceremony ended when Kapaloma, who was representing the chief, hinted that Mapata might be allowed to wear a scarlet headband in the near future.

Village headmen represented the chief at Nkacelenga's and

[1] *Mtwa pandukula ukwa ilumanyanki.*

[2] *Kwenya lina*—to cause the name to climb.

[3] *Tonde, tonde, ukhumwini nanilila mano ngakwela lai.* Tonde is the word for billy goat and its use here emphasizes the procreative functions of the husband in the village.

643 of sorcery, but the representative takes no part in the proceedings
622 at all; he is outside them and is there merely to see that affairs are conducted fairly.

The Value Attached to the United Village

622 The third aspect, the dominant theme in all speeches, is the emphasis on the position of the headman as a leader of a
621 corporate group, and his duty to maintain its unity. The chief and the officiating headmen warn the successor about the possibility of conflict in the village. They advise him to settle differences at once lest these should lead to a split in the village. [591] They also warn him that his wife's relationships with her sisters-in-law, living as she is, virilocally,[1] are a danger point and may lead to trouble. The danger from the 'husbands' who are members of other villages and whose loyalties do not lie directly with the new headman is made manifest to him. At Nyenje's ceremony the officiating headman remonstrated with Nyenje's sisters because some had left the village without giving him an opportunity to settle their differences. The frequent references to the danger of sorcery are also references to the fear of the breakdown of the village. The villagers are exhorted to respect the headman and to be obedient to him for the general welfare of the group as a whole. Regularly the image of the tree and its branches is invoked, and it is made clear that the headman is dependent on his people for his rank and status, and they on him for their unity.

The disintegration of a village in Yao eyes is a sad affair and
621 the disruptive forces in it must be very strong before a section
166 leaves it. People who want to leave a village are usually remon-
627 strated with and told not to 'break' it. In the frequent conflicts between the headmen and their younger brothers the arbitrators usually try their utmost to prevent a migration. They always award compensation to the injured party and tell the disputants to live in peace, and not to leave the village. Frequently, however, the leader of the dissident group prefers to refuse the compensation money, which is often as much as £6 or £7, and

[1] i.e. living with her husband's kin. I use 'virilocal' and 'uxorilocal' in preference to the older but ambiguous terms 'patrilocal' and 'matrilocal'. See Richards, 'Some Types of Family Structure amongst the Central Bantu', 208-9.

2: Mitchell E-5 (1946-1949) 1956 FT7 Yao FT7

Table XXV sets out the disposition of the adult survivors of this matrilineage. 613 621

TABLE XXV

RELATIONSHIP OF ADULT SURVIVORS: ALI KASUNKA VILLAGE

Relationship to Founder	In Village	Married out	Labour Migrants	Total
D	—	—	—	—
S	—	—	—	—
DD	3	—	1	4
DS	1	—	—	1
DDD	4	1	1	6
DDS	1	4	2	7
Females	7	1	2	10
Males	2	4	2	8

In this hamlet Ali Kasunka is both village headman and the senior male member of the matrilineage. He brought the village into Chiwalo's area and he had the responsibility for the welfare of its members. He has to arbitrate in the disputes that arise within the village and he must at least appear at arbitrations where the members of his village have come into conflict with outsiders. 613 621 622

THE CONFLICT OF MALE AUTHORITY AND UXORILOCALITY

Although descent is matrilineal, authority still rests with the men. The senior man by generation and age is the leader of the matrilineage. It is true that there are a number of small hamlets under women. Biti Nkula village is one, Biti Cimeta is another. But even for these villages there is usually a man who can be called in to handle the affairs of the village. He may be a classificatory brother of the village headwoman, or he may be her own son if he is old enough. For example, in Biti Nkula's village, it is her own son Adam who goes to the divinations and finds the necessary medicine when people fall ill. He also attends the court cases involving a member of the village. Adam is married to a woman in Ndiwagani's village about three-quarters of a mile away from his home and he is therefore easily 562 591 613

562 available when needed. When he became a labour migrant in
1945, his younger uterine brother Lipepeje took over the responsi-
591 bilities. He is married in Ali Kasunka's village, which is about
613 a mile from Biti Nkula's. In Biti Cimeta's village the minor disputes are settled by the headwoman herself. Her younger sister's son is married in a village ten miles away, and he would take over the duties if he could. He is married to his sister's husband's sister, and his sister's husband has threatened if he should try to take his wife home he will in turn take his wife to his home. Rather than stand the loss of a member from his matrilineal village he prefers to remain married uxorilocally. When more serious disputes occur he comes to Biti Cimeta's to settle them.

The principle of uxorilocal marriage is thus in conflict with the principle of male leadership of the lineage. If a man is living too far away he cannot attend to his numerous duties. The conflict can be solved in one of three ways. The first is that the man may marry in a village which is close at hand, and most marriages do take place between people who live near each other.[1] Second, he may marry a cross-cousin who is living in the village, albeit in another section of it. He need not then move out. Third, he may bring his wife into his village. The last two alternatives are from his point of view the best. He is then living with his matrilineal relatives, and among the group in which he has clearly defined rights and unequivocal status. But his wife's brothers will resist his attempts to take his wife from her village, especially if she is still capable of bearing children. He has to persuade her brothers to let her go with him and if they refuse, or if the woman herself refuses to go, he is helpless. Is he wishes to live virilocally now his only course is to divorce the woman and marry a woman who will live virilocally with him. If he does bring his wife to his village she is kept there by only loose ties of marriage, and on the slightest pretext her male relatives will take her back to her village or she herself will run away home.

562 The larger the group of relatives to be looked after, the more
591 urgent is the need for the senior matrilineal male to live with his
613 lineage. All the villages headed by females are small. Table

621 [1] 75 per cent of marriages are contracted by people who live within 10 miles of each other. See *Marriage among the Machinga Yao.*

2: Mitchell E-5 (1946-1949) 1956 FT7 Yao FT7

XXVI sets out the position of a casual sample of 36 villages in Chiwalo and Nyambi areas. Among the 23 villages which had

TABLE XXVI

SIZE OF VILLAGES UNDER HEADWOMEN AND HEADMEN

Type of Village	Under 10 Huts	Over 10 Huts	Total
No matrilineage male resident .	13	2	15
Matrilineage male resident . .	10	11	21
Total	23	13	36

less than 10 huts each, 13 or 56·6 per cent had no male matrilineage members living in them. Among the 13 villages which had more than 10 huts, only two or 15·4 per cent had no matrilineage male members living in them.[1] The largest village in which there was no matrilineal male had only 11 huts. When the size of the village increases, the senior male matrilineage member tends to move in to live with his wards.

THE SORORITY-GROUP (*mbumba*)

But as the village grows and the duties of a senior matrilineage male become more onerous, a form of organization appears within the lineage which lessens his burden. This takes the form of the differentiation of sibling groups, and is part of the normal process of segmentation which is inherent in any lineage system. Consistent with the Yao idea that men should take care of the affairs of the lineage, sisters look to their eldest brother when they are in trouble. This group of sisters in the care of their brother is called *mbumba*. In the plural *acambumba* the word refers to women in general, but in the singular it refers to a particular group of women in the way I have explained. The word is always used in the sense of 'so-and-so's *mbumba*', as *mbumba ja CeMayele*. The central concept here is the brother-sister link and I have accordingly translated the word *mbumba* as sorority-group.

The man who is in charge of the women, usually their eldest

[1] Diff. of per cent = 41·1 ; S.E. of diff. = 17·1 ; C.R. = 2·4 ; p = 0·0164.

CHAPTER VII

THE PATRILATERALLY-LINKED GROUPS

The Position of the Husband and Father

MATRILINEAL descent provides the principle on which the smallest of villages, the hamlets, are organized. But not all villages are made up of huts owned by members of one matrilineage as in Ali Kasunka's village.[1] Most villages in fact have a more complex internal organization which may be epitomized as a dominant matrilineage which carries the village headmanship, and a number of subsidiary lineages linked to the dominant lineage by various means. The most common of these is the patrilateral link whereby the subsidiary lineage is connected to the dominant lineage through one of its men.[2] The subsidiary lineage develops in the village from the matrilineal descendants of the virilocally-married wife of one of the men of the dominant lineage, so that the subsidiary lineage, initially at least, are the 'children' of one of the men of the headman's matrilineage. Their peculiar position in the village must be seen in the light of the general position of the father in Yao society.

The father, obviously enough, is also a son-in-law; obvious as this may seem in English it is charged with meaning for the Yao. When parents-in-law refer to their daughters' husbands they use the term *akwegwe*; and they in turn are called this by their sons-in-law. But the *akamwini* are essentially men who are living uxorilocally and *ukamwini* is the general status of being a man in uxorilocal marriage. *Mkamwini* thus cannot be translated into English without periphrasis and I translate it merely as 'husband'. I emphasize, however, that whenever I speak of *husbands* or the *husband* in general I mean 'husbands in uxorilocal marriage'. The Yao assume that marriages as a rule are uxorilocal. Usually the young husband builds a house in his wife's village and is expected to live there for the rest of his life. But

[1] See Chap. VI, pp. 140-3.

[2] I have called this type of village structure the 'thorp' in my earlier essay, 'The Yao of Southern Nyasaland', *Seven Tribes*, 332 ff.

2: Mitchell E-5 (1946-1949) 1956 FT7 Yao FT7

613 he cannot escape the fact that in his wife's village he is only
593 a 'billy goat' and that his 'true home' is in his matrilineal
606 village. The pull of the matrilineal village on him, therefore,
is always very strong and he is constantly trying to return there.
591 His wife's responsible relatives are constantly trying to avoid this
621 because they know that in time they are likely to lose the children who will probably settle in their father's village if they grow up there. In general, therefore, a husband must have a very good reason before he can get his wife's kinsmen's permission to take her and her children to his village. His wife's relatives do not easily yield. But a headman must live in his own village so that nearly all headmen bring at least one of their wives into their villages. Other men sometimes succeed in doing so especially if their wives are past child-bearing, but it is typically the headman's wife who lives virilocally.

621 The husband's interest in returning to his matrilineal village
591 is heightened by the fact that a man in his wife's village is looked
upon as the typical man without prestige: a stranger, whose
584 duty is largely procreative. The theme song at the installation ceremony where the husband was compared with a billy goat, and the common epithet 'chicken rooster' for a husband, reflect the attitude of the Yao towards him. In the song I quoted, the husband was said to be unable to climb high in his village of marriage, however rich he may become.[1] He is, nevertheless, an essential member of the village and the Yao say that it can succeed neither economically nor physically without his aid.

A husband becomes more important when he stays in a village for a long time. He becomes known intimately to the villagers and is conversant with their affairs. He is, therefore, able to advise on many private intra-lineage and intra-village affairs and may even become a marriage surety if there is no more suitable person available. Also in time the husband's position in the village changes. As his children grow up and become active members in the matrilineage, his position of husband becomes supplanted by his position of father, which, in a matrilineal society like that of the Yao, is significant in the same way as that of the mother's brother is in patrilineal societies.

593 The Yao recognize the close bond between father and child.
This bond is conceived to be both social and physical and is

[1] See Chap. V, p. 119.

2: Mitchell E-5 (1946-1949) 1956 FT7 Yao FT7

 582

of patrilateral kinsmen, so that these bonds are personal and distinctive for each member. 586 613

The Development of the Corporate Identity of Patrilaterally-linked Groups

The parent-child relationship is reflected in the structural relationships of a patrilateral group to the dominant matrilineage. Children are less strongly tied to their father than to their matrilineal kinsmen. Usually when a woman dies or is divorced while living virilocally, her children return to her matrilineal village. If the children are too young to express their own wishes, their mother's brother comes for them and they are formally returned to their village of origin. Occasionally children who have grown up in their father's village, especially if they have married their cross-cousins there, refuse to move back to their matrilineal village. They prefer to remain in their father's matrilineal village where they know people more intimately. In time, as they grow older, the women have daughters who may marry uxorilocally and thus a section of a foreign matrilineage begins to develop in the village. 591 593

The village as a social unit is more closely integrated when the children who are living there with their father are still young. They do not yet form a corporate group within the village. Their affairs are supposed to be controlled by their mother's brother, but in fact the headman, who is usually their father or a paternal kinsman, may settle many of their minor difficulties and find medicine for lesser illnesses, without bothering their mother's brother. When the children become adults and begin to assert their own wills the position in the village becomes more unstable. As the daughters grow up and marry, their brothers become their junior marriage sureties. If the mother's brother lives far away, the father of the children may be the senior marriage surety. He still has a personal attachment to his children, but his sons' relationships with him may now become affected by structural elements as they tend to interact, with him and others, in certain situations as representatives of corporate groups. As the village develops a son takes over the position of senior marriage surety to the headman's wife's descendants and he becomes the senior male lineage member, while his sisters' sons begin to take over responsibilities for their sorority-groups. 593 613 621

2: Mitchell E-5 (1946-1949) 1956 FT7 Yao FT7

in a joking-relationship which is more intense between men and women. Men and women in Yao public life always behave distantly to each other; hence joking-relationships are most intense between male and female cross-cousins. The joking-relationships between cross-cousins of the same sex is much more subdued and limited. The village headman himself, if he is not the actual father of the cross-cousins, is likely to be the butt of most of this. His visits to the huts of his cross-cousins to give them irksome instructions is an especial occasion for this sort of joking. Cikoja ordered his female cross-cousins to sweep a site for my tent when I first went to his village. I was most embarrassed by the insults that were hurled at his head during this procedure, but he took it all calmly and said nothing. The hostility inherent in the headman-villager relationship, together with the opposition between the dominant matrilineage and the patrilaterally-linked groups, provided an opportunity *par excellence* for joking. Thus the joking between cross-cousins in the village context is a means whereby the hostility between the component groups is dissipated and the harmony within the village maintained.

The groups are, of course, welded more closely by cross-cousin marriages which are not only allowed but prescribed. By cross-cousin marriage a man from one of the component groups of the village may marry and yet not leave the village. He may in fact have to build a hut in another part of the village, but this is obviously not the separation that uxorilocal marriage entails. At the same time, in a village where the headmen have married their cross-cousins, there will be fewer patrilaterally-linked groups, so that the village will be less complex and consequently less liable to internal dissension. If cross-cousin marriages were not practised, and if the children of the headmen and senior members of the linked lineages did not return to their matrilineal villages on the death of one of their parents, the intra-village situation could in time become extremely complex. Assuming that each linked group had at least one male member married virilocally, the number of related groups would double itself in each generation.[1] However, because of limiting economic factors I describe later and the disruptive social processes within villages, this situation never occurs in practice, and Yao villages on the whole remain relatively simple in structure.

[1] See detailed argument and diagram in *Seven Tribes*, 111.

CHAPTER VIII

THE VILLAGE THROUGH TIME

IN order to present my analysis of the internal structure of Yao villages and of the position of the village in the social structure as a whole, I have given static pictures of villages at particular moments of time. But it should be clear that this description of the enduring social relationships, which appear as a static social structure, is abstracted from a series of on-going processes in which certain social relationships appear as repetitive elements. 621

In reality villages are constantly changing. Their personnel is replaced, their internal lineage composition changes, and they change their sites from chiefdom to chiefdom. It is perhaps easiest to visualize these changes, and the way they affect the structure, by viewing them in terms of the slow ontogenetic development of villages. Villages pass through a cycle which leads from their inception, through internal differentiation out of a larger group, to final break-up through their own differentiation, and the resumption of their original simple form.

Let us consider the typical life history of a hamlet which has just moved into a particular area. It is composed of four or five huts belonging to the daughters of one woman. The mother herself may be alive, as an old woman and very probably a widow. The daughters are adults and have with them their husbands and children. The hamlet settles down to its life in its new area. The warden of this sorority-group probably lives some miles away and the women have to send the older children to call him when they need his help. As the daughters of the [541] women grow up, young men come to marry them. Each couple may start to live in the girl's mother's kitchen at the back of the hut. In time the husband builds a hut next door to the [342] hut of his mother-in-law. Yao huts as a rule are made from pole and daub and they last from five to ten years. White ants eat the poles away and the thatch always leaks a little in very wet weather. The winds and the rains erode away the plaster.

2: Mitchell E-5 (1946-1949) 1956 FT7 Yao FT7

621 When a villager died in pre-White days, the hut and personal effects were destroyed. Nowadays, with the improving type of [768] dwelling, which frequently includes well-timbered doors and glass-windows, huts are treated with medicine to cleanse them of the harmful effects of the death and they are used again. But [356] all houses must be repaired continually if they are to remain habitable. Eventually most houses fall beyond repair and new houses must be built. The women pull the poles out of the ground and use them for firewood and the site is planted with pumpkins or maize by the nearest relative.[1] A new hut site is then chosen according to the wishes of the owners. As a rule outsiders are neutral about this, and a village member selects a site in accordance with his or her social position in the village. The women still stay near their mother, but they may build on the outside fringe of a group of huts. When the mother's house collapses she may in turn build her hut on the outside fringe of the group near her daughter's hut. In this way the spatial distribution of the huts gradually comes to reflect the segmentation of the lineage.

621 As the woman's daughter's children grow up and marry, the 591 woman's son persuades his wife's relatives to allow him to take his wife to live in his home village. If he is a polygynist he usually takes the senior wife, but he may take the other or others as well. His own daughters now marry uxorilocally in the village if their mother is still alive. If the parents live long enough their daughter's daughters in turn marry and build their huts there. A crisis comes when either the man or his wife dies. The children have to decide whether to stay where they are or to move back to their own matrilineal village. If they do stay at their father's village they form the nucleus of a patrilaterally-linked group. As they grow older the senior male of their matrilineage may come to live with them. Through the years while this internal differentiation is developing within the village, the huts are decaying and being rebuilt. While new hut sites are being selected the physical form of the village is reflecting the continuing social differentiation.

621 At the same time gardens are being planted and crops reaped 361 each year. The soil in the first garden sites has probably been 166 depleted already and is either lying fallow or is under cassava.

[1] Usually the name-heir of a woman, i.e. her daughter's daughter.

3:Stanaus D-5 (ca. 1912) 1922 FT7 Yao FT7

If the suitor receives a favourable reply, he informs his father and the elders of his village and then goes to the girl's village where he begins to build a house and spends much time performing duties for the girl's parents, such as hoeing. If, after a month, he is approved, the girl's people send a messenger to the man's village, asking, "Have you missed anyone from your village?" The answer is, "Yes, So-and-So," to which the reply is given, "Well, he is here with us." The man's people then arrange to come to the girl's village on a certain day. 584

On the appointed day, the two sponsors (*wpwai*) on each side, meet in the village open space and being assured that there is nothing to prevent the marriage and the man and woman being willing, the tie is made. There is no formal ceremony or token of marriage between the man and woman. Porridge is cooked for the sponsors and a fowl provided. The back of the fowl is broken by the elder sponsor as a sign of the compact. The man is exhorted by his sponsors to be a credit to them in his new village, while the woman is told by her mother and her aunt that they expect her to live an exemplary life. The man's chief sponsor tells him that no longer is he a member of his own village, but belongs to the girl's sponsor, and the converse is told to the girl. Henceforth, in all matters relating to them as married people, the girl will consult her husband's sponsor and vice versa. The elder sponsor on both sides is called *wpwpa wakupwa*, borrowing from Chinyanja, "a log lying down," and is usually an uncle; the junior is commonly the brother of the bridegroom. 585

On leaving the girl's village, the *wpwpa wakupwa* will say, "You will see me no more in this village but this, my younger companion; if you see him, you will know he comes from me." The sponsors' responsibilities last so long as the pair live, unless they separate for some reason. Thus, should the husband's goats die or should he lose his axe, the woman reports to his sponsor. If the husband kills an antelope, the sponsors receive some portion of the meat. If a village is to be moved, the inhabitants consult the sponsors of every married couple. In this way, the sponsors become the repository of all the events of the married life of the husband and wife and in case of any dispute or untoward event, there is the accredited testimony on family matters. The account given by Macdonald,[1] I venture to think may be incorrect.

Should the *wpwpa wakupwa* die, the junior sponsor takes his place and a new junior is appointed. The new *wpwpa wakupwa* sends a message to the other party's sponsor telling him of the change, at the same time presenting him with a fowl. As he may be acting for a number of people, he may have to distribute several fowls; later, he visits his confreres.

Following the marriage compact and the departure of the sponsors, the married pair go away quietly to the house the man has built for his wife, or she may wait until evening and, if she is shy, she may be accompanied by an elder sister, or may be sent with food for her husband. Consummation may not take place for a day or two, after which the hon- [591]

[1] Macdonald, op. cit., p. 130.

marriage-money for the marriages of the members of the group. Briefly this means that he must be approached before a marriage can be legally contracted by any member of his charge, he or his representative is present at the ceremony which formally sanctions the marriage, and he is responsible for the behaviour of his female relative in that marriage. Third, he is immediately concerned with the physical welfare and health of his sorority-group. He must track down the sorcerers causing their illnesses and supply the medicine to heal them. He has to arrange for the ritual purification of mourners after the death of one of the sorority-group's members. Fourth, he must be present in the court-house if one of his charges is involved in a case and he is usually looked to for the money for the fine. I have known a case not to begin because the warden of the sorority-group was not present. Frequently if the husbands of the female members of his charge default, he has to provide the hut-tax money.

Usually the warden of the sorority-group is the eldest brother of a group of adult full sisters. The younger brothers of the group of sisters, while concerned with their welfare, do not stand in this particular responsible position. They refer to the sorority-group as 'our sorority-group'. The elder brother refers to the sorority-group, he is noted, as 'my sorority-group', and this sets him over and against his younger brothers. The position that the warden holds, however, is not rigidly fixed, for a younger brother may assume control of the sorority-group if for some reason he is dissatisfied with the way in which affairs are being conducted, and is able so to assert himself.

If we recall that the status of a man in a Yao community is determined by the number of dependents that he can command, it is easy to see that relationships between an elder brother and his younger brother are distinctive. The elder brother is responsible for the actions of his younger brother in much the same way as he is for one of his sorority-group, and the younger brothers have a great emotional attachment to their elder brothers. Yet at the same time the elder brother stands in the way of the younger brother in his striving for status, in that while the elder brother is warden of the sorority-group the younger brother cannot be, and therefore cannot have dependents and status. It is not surprising to find that accusations of sorcery are frequently made between brothers and the stock often is that the younger brother takes the sorority-group away from his sorcerer brother to some other place and sets up a new village with it. Therefore, one possible source of instability in a Yao village lies in the operation of the kinship system in a system of values which reckons status by adherents.

I have thus far been describing the simpler types of village. In the larger groups it is common for the warden of the sorority-group to live in the village where his sorority-group is. Then he usually brings one (or sometimes more) of his wives to the village, where she lives patrilocally. The daughters that are born to her do not return to the sorority-group from which the headman's wife came but marry and set up households near their mother in the village of their father. Thus there develops in time a second sorority-group in the village, alongside the first sorority-group, and related to it through the headman. At this point we may say that the man's position has changed from that of headman of a village containing a single sorority-group, to the more complicated and less secure one of village headman over a more hetero-

grown group, in which his jurisdiction over one part of the village arises from his 622
position as the warden of a sorority-group, and that which he exercises over the other
sorority-group derives partly from his position as a non-matrilineal relative and 591
partly from his own personal qualities. The warden of the second sorority-group is
the headman's own son and it is he who takes over all the functions proper to that 612
position, but the successor to the headmanship is a man's sister's son, usually, though 613
not invariably, the first-born son of the eldest sister. Each village headman in turn
brings his wife to live in his village and each headman's wife in turn tends to set up a 621
fresh group which is of a different lineage affiliation from that of the headman. In addition to this the warden of the sorority-group formed from the first headman's children tends in due course to live patrilocally and the children of his wife set up yet another foreign group in the village. Hence, theoretically, with each generation the number of opposed groups in a village doubles itself, and in a few generations, were this to continue, the position would become extremely complex. In fact a village of long standing is seen to be composed of a central lineage group to which the headman belongs, and a series of other lineage groups related to the headman's lineage group through one or other of the past and present headmen of that village. Such groups of different lineage make-up are usually mutually opposed and are held together only by the combined influences of a weak patrilineal connexion with the headman's lineage and the personality of the present headman.

This situation is clearly an uneasy one for the headman. His wife is looked upon as 621
a stranger and is often made to feel it. The headman's sorority-group often expresses
in hostility and jealousy towards her. The children of the two groups are on no 622
easier terms. They call each other 'cross-cousin' (*ashwau*) and are expected to marry
one another. At the same time the hostility between them is formulated in joking 578
relationships. This critical situation of the headman is made clear to him on the day
of his succession. One headman was told: 'As you have got wives, do not listen to 612
what they say. They may be lying. Sometimes they will quarrel with your sisters and 625
say that your sisters have been insulting you. This is false. When you hear these reports you may be unfair to your sisters and the people will say that you have broken your village through listening to nonsense.' Thus when conflicts arise between members of a village the headman is in a peculiar position and it is difficult for him to remain impartial. In such a situation the tendency is to call in an outsider to try to settle the differences. Sometimes these differences are patched up and the village continues as a unit. But, particularly after the death of the first village headman, the tendency is for one of the groups to move away to a completely new area, there to set up a unit of its own.

I quote an actual case to illustrate this procedure:

621
622
578
684

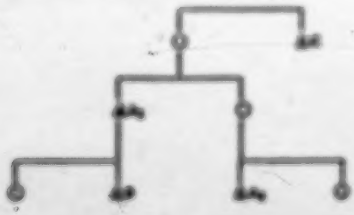

6: Mitchell E-5 (1946-1947) 1949 FT7 Yao FT7

They are semi-subsistence cultivators who own no cattle and whose diet is therefore largely vegetarian, viz. sorghum and maize-meal with ground-nuts and beans and certain leaves together with a small quantity of cassava roots. 105

Marriages are contracted early in life with little difficulty and ceremony. Formerly girls were espoused as mere children, and this still happens, but whether the custom is falling away or not I could not check quantitatively because the memories of the old women who had been married as children forty or fifty years ago could not be relied upon. Table I shows the ages at first marriage for a sample of 121 married women for whom this information was available. 592

Where marriage takes place so early we can expect that the mean age when child-bearing commences will also be early. Table II shows the median age of mothers at the birth of their first child. 163

TABLE II. *Age of Mother at Birth of First child*

Present age-groups of mothers	Age of mother at birth of first child									Total	Median age at birth of first child
	12½-15	15-17	17½-20	20-25	25½-30	30-35	35½-40	40-45	Over 45		
Under 30	9	16	22	17	6	4	..	..	..	74	17·9
30-45	10	14	10	9	4	7	3	4	3	66	19·8
Over 45	3	7	9	9	3	6	1	3	1	42	20·6
Totals	24	37	31	35	13	17	4	7	4	182	19·3

From these two tables it is clear that nearly all women in the community are married early and that child-bearing commences very soon after marriage.

Table III shows the conjugal status of all women over the age of 15. 162

TABLE III. *Conjugal Status of all Women over the Age of 15*

Present age-groups	Never married	Wives of			Divorced	Widow	Total
		Monogamists	Polygamists	Labour migrants			
Under 20	23	13	3	6	..	..	45
20-30	3	27	18	9	8	3	78
30-45	1	31	19	3	8	3	70
Over 45	..	14	10	1	11	16	52
Total	27	85	50	19	19	24	246

Here we see that of all women under 45 (194), 141 (73 per cent.) are married, though only 85 (43 per cent.), i.e. the wives of monogamists, have their husbands living permanently with them. Another 40 (20 per cent.) were married to men who were married to other wives, so that while their husbands were not living with them permanently they were nevertheless with them periodically. Eighteen other women (9 per cent.) were married to men who had left to work outside the area and hence were not living with their wives at all at the time of the survey. Visits by men to places of work outside the area may last 2 years or more. It should [595] [591] [167]

5: Mitchell E-5 (1946-1948) 1949 FT7 Yao FT7

ship. The difficulties of his position are brought home to the neophyte village headman in speeches made by old and experienced men. On one such occasion I heard a man say, 'Some men who marry into a village are bad and can split a village like this one by telling lies to the headman, saying that his sisters are talking behind his back and are insulting him. When a headman hears all this he might break his village by ill-treating his relatives, thus causing himself to be left all alone.' In this way the headman's responsibility for maintaining harmonious relations between the members of the village and himself is emphasized. His failure to do so results in what they call a break in the village—the departure of some of the members to live elsewhere—which is a severe blow to the status of the headman. In fact, he is dependent on his dependants for status, and the Yao are quick to point this out to neophyte headmen, saying, 'A tree cannot grow without branches.'

We can better understand the situation if we consider the social structure of the Yao village a little more closely. The Yao are a matrilineal people and are dominantly matrilocal. They live in small groups of huts scattered fairly evenly over the country and from a few hundred yards to possibly a mile or so apart. Such clusters may contain as few as five or as many as sixty or more huts, occupied by between 20 and 200 people.

These people are almost always kinsfolk, and in the smaller villages they are usually all either matrilineal descendants of a common ancestress or their spouses. In the larger groups there is a more complex situation which I shall analyse below. In the simpler groups there may be no male matrilineal descendant in the village and the leadership of the group is taken over by a senior female descendant of the founder of the village. Usually, however, if the group is large, one of the male matrilineal descendants lives patrilocally in the village and assumes leadership.

The relationship between a male matrilineal descendant and the female matrilineal descendants who are in his charge is signified by the word '*mbumba*'. The word particularly refers to the relationship between a man and his sisters and I have therefore translated it as 'sorority-group'. It includes a man's full sisters, matrilineal female collaterals (whom he calls sisters), their female children, and the female children of those female children, and so on. It is usually used in the sense of 'somebody's sorority-group'. A man belonging to the descent-group of the sorority-group may refer to these women as 'our sorority-group'. The man who is in charge of the sorority-group is referred to as the *ayaw mbumba*. This could be translated as 'owner of the sorority-group' but because of the property associations with the word 'owner' in our language, I have instead translated this as 'warden of the sorority-group' which expresses more accurately the relationship between a man and his female relatives. Even in those groups where there is a female in charge of the village and no male matrilineal descendant is resident in the group, there is usually some one man, possibly married in some other village, who is warden of the sorority-group. The warden of a sorority-group has certain precise duties to perform on behalf of his charges. First, he is concerned with the good relations between members of the sorority-group and with other such groups. He has to settle most of the domestic quarrels that take place between members of the sorority-groups. Second, and this is considered to be a most important function, he is the person who is the

marriage-surety for the marriages of the members of the group. Briefly this means that he must be approached before a marriage can be legally contracted by any member of his charge, he or his representative is present at the ceremony which formally announces the marriage, and he is responsible for the behaviour of his female relative in that marriage. Third, he is immediately concerned with the physical welfare and health of his sorority-group. He must track down the sorcerers causing their illnesses and supply the medicine to heal them. He has to arrange for the ritual purification of mourners after the death of one of the sorority-group's members. Fourth, he must be present in the court-house if one of his charges is involved in a case and he is usually looked to for the money for the fine. I have known a case not to begin because the warden of the sorority-group was not present. Frequently if the husbands of the female members of his charge default, he has to provide the hut-tax money.

Usually the warden of the sorority-group is the eldest brother of a group of adult full sisters. The younger brothers of the group of sisters, while concerned with their welfare, do not stand in this particular responsible position. They refer to the sorority-group as ' our sorority-group '. The elder brother refers to the sorority-group, be it noted, as ' my sorority-group ', and this sets him over and against his younger brothers. The position that the warden holds, however, is not rigidly fixed, for a younger brother may assume control of the sorority-group if for some reason he is dissatisfied with the way in which affairs are being conducted, and is able so to assert himself.

If we recall that the status of a man in a Yao community is determined by the number of dependants that he can command, it is easy to see that relationships between an elder brother and his younger brother are distinctive. The elder brother is responsible for the actions of his younger brother in much the same way as he is for one of his sorority-group, and the younger brothers have a great emotional attachment to their older brothers. Yet at the same time the elder brother stands in the way of the younger brother in his striving for status, in that while the elder brother is warden of the sorority-group the younger brother cannot be, and therefore cannot have dependants and status. It is not surprising to find that accusations of sorcery are frequently made between brothers and the result often is that the younger brother takes the sorority-group away from his sorcerer brother to some other place and sets up a new village with it. Therefore, one possible source of instability in a Yao village lies in the operation of the kinship system in a system of values which reckons status by adherents.

I have thus far been describing the simpler types of village. In the larger groups it is common for the warden of the sorority-group to live in the village where his sorority-group is. Then he usually brings one (or sometimes more) of his wives to the village, where she lives patrilocally. The daughters that are born to her do not return to the sorority-group from which the headman's wife came but marry and set up households near their mother in the village of their father. Thus there develops in time a second sorority-group in the village, alongside the first sorority-group, and related to it through the headman. At this point we may say that the man's position has changed from that of headman of a village containing a single sorority-group, to the more complicated and less secure one of village headman over a more hetero-

9:Lawson Y-5 (ca.1940)1949 FT7 Yao FT7

MARAVI FRY

M 602 621 BUT IF, IN TRUTH, VILLAGE LIFE USED TO BE ORGANIZED

on a kinship basis, how far, you may ask, is it still so organized? Very largely. Cross-cousin marriage may be dying out and the bigger homesteads inclining to split up, but society is still fundamentally matrilineal and matilocal. One or two examples will show in what ways it is changing and in what ways it is fairly stable.

Y 592 Y [595]

I. An old Yao friend of mine, X, who died three years ago was the grand-mother (*ambayv*) of Y, a village of 13 huts divided in two by a government-built road. Her father was a polygamist; her husband, (dead before I knew her), had had two other wives in nearby villages; when some 12 to 15 years ago she and her family, (*mbumba*), moved here, parts of it broke away, leaving her with a much smaller homestead than that in which she grew up. Besides the abandoned hut of my dead friend X, are those of a sister, two daughters and their husbands, six nieces (the daughters of three different sisters) and their husbands, a widowed step-brother, a step-son who has brought his wife to his home probably because her brother married his sister and so lives at Y, and a "boys' hut", (really a kitchen too), in which sleep or slept the bigger sons of one of her nieces.

M 592 M [590] [193] M [596] [601]

II. A Nyanja friend, A, five or six years ago was allowed by his parents-in-law to take his wife back to his home village. Here, therefore, contrary to matrilocal custom, he lives with his own parents; but the rest of the homestead is matrilocal. When A built his hut here there were four other huts: his parents; those of a younger sister of his mother, (*mai mamg'ono*, "little mother"), and her husband; a girl cousin, this aunt's daughter and so called by him "sister" (*ch-mwali*), and his only married sister. It is still a small homestead, though another sister has since married and her husband built a hut here, and his young unmarried brothers have built their own "bachelors' hut", (*ziyamata*) where they sleep with one of his nephews; it can never be large, since his parents had eight sons, who as they grow up and marry go off to their wives' homes, and only two daughters to bring them sons-

1: Tew E-4 (no date) 1950 FT7 Yao FT7

bibele (plur. *mabele*), a breast. This includes all who are supposed to be descended 614
from a common ancestress. Often the direct line of descent from the founding 613
ancestress is not known for more than three or four generations. The small groups
which can definitely claim to be 'of one breast' constitute the distinct matrilineal [601]
groups which live together in separate hamlets within a village. Each is undifferentiated
in relation to other matrilineal groups, but internally each is differentiated on the
principle of sibling unity.

The main emphasis of the kinship system is on the bond between a man and his 593
sisters. Their relationship is summed up in the word *mbumba* (translated by Mitchell
as 'sorority group'). A man speaking of his *mbumba* refers to all the women he calls 602
sister, their daughters, and their daughters' daughters. Strictly speaking, female kin
in the ascending generations are excluded, as belonging to the *mbumba* of his mother's
brother. The 'warden' of a sorority group, *anyene mbumba*, is the senior of the brothers
and is responsible for the behaviour of the women in his charge; he appears for them
in court and pays fines on their account. He plays an important part in the marriage
negotiations. It is his duty to consult the diviner if his sister or her child falls ill, and
to be chief mourner at the funeral of either of them, also providing medicine for the
ritual purification at the end of the mourning period. Formerly these obligations were
balanced by certain rights. He could sell some of them into slavery for his own
personal reasons. This privilege is ended, but even to-day it is through his sorority
group that a man achieves status and independence.

The principle of sibling unity is expressed in many other ways. A man and his 601
sister reciprocally call each other *alombwanga*. More usually, a woman calls her 602
brother, older or younger than herself, *acimwawi* (a term of respect usually applied to
a chief), for any brother may be regarded as warden of her sorority group. A man has
the same duties to his younger brothers as to his sisters, so they also call him *acimwawi*,
but he calls them *mpwanga* 'younger brother', as they can never be in the position
of warden in relation to him. Maternal uncles are called *abambwa*, and a sister's
son *cipwa*.

Within each matrilineal descent group, differentiation takes place between members 602
according to whether they are siblings or not. A man's sorority group included ideally 593
his own siblings and their female matrilineal descendants. His sister's daughters are
also the sorority group of his sister's son, their brother, so that any woman can belong
at any one moment to the sorority groups of her brother, her mother's brother, her
mother's mother's brother, &c., but the effective one is that of her own brother, if
adult. He is consulted first in small disputes, and at the marriage ceremony each party
is represented by a brother as well as by a mother's brother. In the break-up of a
hamlet (described below, p. 12), siblings tend to hold together more closely than
cousins and to form groups of their own, so that each woman in the descent line is a
potential point of cleavage. Tension between brothers as they compete for control of [579]
the sorority group is a source of friction within the sibling group which eventually
leads to its disruption.

Since marriage is mainly matrilocal, and extra-village, the husband in his wife's 591
village is seen as a stranger by all the members of her matrilineal descent group.
There is a tendency for members of each descent group to live together in a cluster 621
of huts. The word 'hamlet' is used by Mitchell to indicate a cluster of huts, in which 619

2: Mitchell E-5 (1946-1949) 1956 FT7 Yao FT7

175 2. Free men are under their elder brother in the first instance, but
565 they may carry their cases to the headman of their village or
622 even to the chief of the country.
643 3. Slaves were entirely under their own master.[1]

The headmen's subservience to the chief is described in the following passage:

In all public transactions the headman represents his village. He receives the chief's orders and sees them carried out. When he kills [651] an elephant he sends one of the tusks to the chief. Should he kill twenty elephants he is not expected to give up twenty tusks—two or three would be sufficient. If he shoots a large buck he gives one haunch of venison. For all such tributes he expects to receive in [646] return a present (generaly a little powder). . . . He is expected to [593] attend the chief's parliament unless he is under an elder brother in which case he is not allowed to speak, except when especially commissioned. Headmen are expected to report all cases of war, but they often attack enemies without telling their chief beforehand, saying, [721] 'Let him hear of the enterprise when it succeeds.' Yet this is dangerous unless they are sure of success, and well acquainted with the chief's private sentiments. On reporting an attack they present the chief with part of the booty. In times of war each headman when summoned, must follow his chief's flag, otherwise his village is burned [647] down, and all that fail to escape are killed or enslaved.[2]

175 Yet within the framework of this organization villages were markedly autonomous. MacDonald's description, which I have 578 *jure quoted*, brings this out very well. Elsewhere he writes: 622 'The chief may often have less influence than powerful headmen, 643 and we have known cases where he simply contented himself with grumbling when his headmen acted contrary to his desire.'[3] The chief did not differ greatly from his more powerful headmen. A certain amount of ritual in terms of ancestor worship embellished his position, and he had some ascendancy over village headmen to whom he had given land. Yet, in the last analysis, the chief had to rely on his personal following and military power to subjugate headmen who were becoming too powerful. The chief was therefore in direct competition with his subject village headmen, and involved in a constant struggle with them for followers. MacDonald describes how the chief himself was a

[1] MacDonald, *Africana*, i. 155.
[2] MacDonald, *Africana*, i. 157.
[3] MacDonald, *Africana*, i. 155.

2: Mitchell E-5 (1946-1949) 1956 FT7 Yao FT7

XXVI sets out the position of a casual sample of 36 villages in Chiwalo and Nyambi areas. Among the 23 villages which had 562 591 613 621

TABLE XXVI

SIZE OF VILLAGES UNDER HEADWOMEN AND HEADMEN

Type of Village	Under 10 Huts	Over 10 Huts	Total
No matrilineage male resident .	13	2	15
Matrilineage male resident . .	10	11	21
Total	23	13	36

less than 10 huts each, 13 or 56·6 per cent had no male matrilineage members living in them. Among the 13 villages which had more than 10 huts, only two or 15·4 per cent had no matrilineage male members living in them.[1] The largest village in which there was no matrilineal male had only 11 huts. When the size of the village increases, the senior male matrilineage member tends to move in to live with his wards.

THE SORORITY-GROUP (*mbumba*)

But as the village grows and the duties of a senior matrilineage male become more onerous, a form of organization appears within the lineage which lessens his burden. This takes the form of the differentiation of sibling groups, and is part of the normal process of segmentation which is inherent in any lineage system. Consistent with the Yao idea that men should take care of the affairs of the lineage, sisters look to their eldest brother when they are in trouble. This group of sisters in the care of their brother is called *mbumba*. In the plural *acambumba* the word refers to women in general, but in the singular it refers to a particular group of women in the way I have explained. The word is always used in the sense of 'so-and-so's *mbumba*', as *mbumba ja CeMayele*. The central concept here is the brother-sister link and I have accordingly translated the word *mbumba* as sorority-group. 613 593

The man who is in charge of the women, usually their eldest 593

[1] Diff. of per cent = 42·1 ; S.E. of diff. = 17·1 ; C.R. = 2·4 ; p = 0·014.

2: Mitchell E-5 (1946-1949) 1956 FT7 Yao FT7

●593 brother, is called *asyene mbumba*, or 'the warden of the sorority-group'. As one would expect among a matrilineal people, the link between a man and his mother and sisters is strong. But it is the link with his sister that is strongest. She relies on him for protection, particularly when she becomes ill, but also in her [582] relationships with her husband. Her brother will be her junior marriage surety, and he will give the consent which will allow a man to marry her. Also a woman's brother will have to consult the diviner and find the medicines when she or her children [731] sicken. In times of distress, as, for example, if her crops have failed, she will appeal to her brother for help. Similarly the man is dependent on his sister in a number of subtle ways. He can always rely on her for hospitality, and is able to get a meal from her if he needs it. But his dependence on his sisters for prestige is much more important. The significance of this will emerge when we see the *mbumba* organization in the light of the segmentation and fission of the lineage. A man can only found a new village if he has the full support of his sisters. A sister also plays a most important rôle at the birth of his children. She represents him both at the first foetal-quickening ceremony and at the birth of his child, when she listens to the birth-pang confessions of his wife.[1]

At the same time the relations of sister and brother are restricted by custom. A man must never appear too familiar with his sister, especially in sexual matters. He may not, for example, [513] sleep in the same hut as she does; if she is away and he sleeps in her empty hut he must not make his bed in the place where she usually sleeps. He may not even sit on her sleeping mat. [835] Authentic cases of incest with a sister are extremely rare, whereas I recorded three or four cases of father-daughter incest while I was in the field. Supposed cases of brother-sister incest are recounted and discussed widely. This is understandable because [754] a man who is suspiciously familiar with his sister is suspected of being a sorcerer, since it is widely believed that a sorcerer usually obtains the power that he needs for the performance of his dire deeds by sleeping with his sister. The riddle of the initiands—'What is the sweetest fruit which may not be tasted?' Answer, 'Your sister'—neatly reflects the attitude of the Yao.

The close link of brother and sister is also reflected in the

[1] The significance of this is explained in Chap. VII, p. 185.

The close link of brother and sister is also reflected in the kinship terminology. The common term used by both men and women to address sisters is *cemwali* and it is also applied to all women out of respect. But the term which is used descriptively and sometimes in address, cross-sexually, is *alumbwangu* (my sibling-of-opposite sex). It is self-reciprocal and thereby expresses the special relationship between the man and his sisters. Two sisters address each other in everyday conversation as *cemwali*. When it is necessary to be more specific an elder addresses the younger as *akuluwanga*. These are also descriptive terms. A man addresses his younger brothers as *apwanga* while they address him as *acimweni*. Women also address their elder or younger brothers as *acimweni*. This word is widely used as an honorific title but it is especially used for people who are in authority. The chief, for example, may be referred to as the *mcimweni*, and men frequently call their mother's brothers and other senior matrilineal male relatives by this term. An elder brother has the same duties towards his younger brothers as to his sisters, so that use of the term of address *acimweni* here indicates his position of authority over them.

From the point of view of a warden, his sorority-group is essentially made up of his sisters. We have seen that he is responsible for his younger brothers in exactly the same way as he is for his sisters, though technically they are not his sorority-group. He also has control over his sister's children so that ideally a warden sees his sorority-group as his sisters and their daughters and their daughter's daughters and so on. But a man's sister's daughters will probably have as their warden their own brother who stands in the same relationship to them as their mother's brother stands to their mother. The matrilineage is therefore organized internally in a system of inclusive sorority-groups extending from the eldest surviving member down to the youngest. However, a component sorority-group of a matrilineage does not begin to appear as a corporate group until the man who is to be its leader is old enough to take charge of the affairs of the women under him. Naturally, the age at which this happens is largely a matter of circumstance. Theoretically a man may not take charge until he has been initiated. But Yao boys nowadays are usually initiated at about 8 to 10 years of age. Obviously a child of this age cannot take over the affairs of his adult sisters, so that his mother's brother looks after

613 them until he grows up. It is only when the boy becomes
562 adolescent that he begins to take an active part in these affairs.
This may begin in a small way. He may, for example, accompany
593 his mother's brother when he goes to consult a diviner. Or he
604

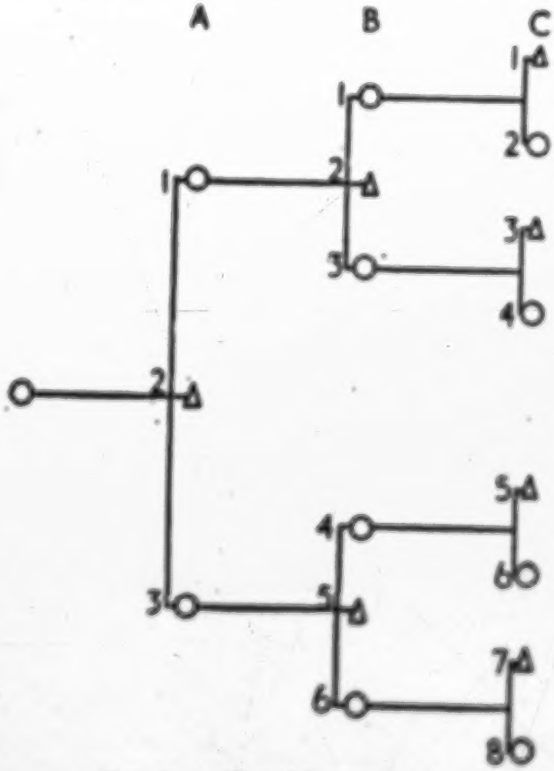

DIAGRAM 3. THE SORORITY-GROUP.

A1 sees his sorority-group as being composed of A2 and A3 and by extension *their* children.
B1 sees his sorority-group as B2 and B3 and by extension *their* children.
B3 sees his sorority-group as B4 and B6 and by extension *their* children.

may be given the charge of the conjugal affairs of one of his newly-married sisters. Gradually he assumes more and more responsibility. His mother's brother on the other hand falls more and more into the background and becomes rather a consultant than an active participant.

2: Mitchell E-5 (1946-1949) 1956 FT7 Yao FT7

It is difficult to over-emphasize the importance of the sorority-group in everyday life. There is hardly a social situation in which the relationships of a man to his dependent female matrilineal kin are not involved. Probably marriage is the most frequent context in which his duties to and responsibilities for his sorority-group emerge. When a man wishes to marry a woman, he must get the consent of her brother. Ideally, it is a woman's brother who gives the consent, and if one asks a Yao how he gets married to any particular woman he will answer immediately, 'You go to ask her brother.' When consent has been obtained the woman's brother seeks out the man's brother and formally meets him, thereby setting the public seal on the relationships between the man and the woman. This gives the husband particular rights over his wife and her activities. After this, the difficulties of any of the marriage partners are the concern of the two sponsoring relatives (*ainamangenve*) whom I have called 'marriage sureties'. They meet to discuss the illnesses of either of the marriage partners or their children and try to settle the differences that arise in the married life of their wards. They must be consulted before the marriage can end, and in fact they perform the act that ends the marriage, i.e. one pays a nominal sum of say 2s. to the other.

According to the Yao, women are quite helpless in their relationships with others, in illness or in any court cases, and must always have a man to look after them. They are seen to be as dependent on him as children are upon their parents. A statement made to me by old Naliwa, a man who has been looking after a sorority-group for years, reflects this attitude of the men towards the women in their care.

These dependent women (*mbumbe*) are as annoying as children to look after. They are *mimi*[1] indeed. If a child is ill they go to tell their brother who says, 'Very well, I shall come to see the child.' If he is not very quick to do it they are likely to be backbiting. If he finds the child very ill he goes to tell the marriage sureties of its father, and they go to a diviner to look for medicine for the sick child. Then the sisters say that he is a good man because he gets on with the job when a person is ill.

Soon the child's mother becomes ill. Someone goes to tell her brother who says that he will come to see her. He visits her husband's

[1] Backbiting. See Chap. VI, pp. 133-6.

2: Mitchell E-5 (1946-1949) 1956 FT7 Yao FT7

562 marriage surety and together they consult diviners and find medicine
578 until she recovers. Then he goes back to his village.
593 He has no sooner got back when someone comes along to tell him that the child is ill again. He says, 'I am busy, I have some work to do. Tell someone else to go to the diviner.' The messenger goes back to his sisters and they say to each other: 'He is not a good man. He refuses to go to the diviner for the child.' Another says, 'Yes, it is so. Our brother is not diligent and when he comes here he will get no food from us. He eats our food but he does not work for us. Let us ask someone else to look after us. Our younger brother is a good man indeed.' Then everyone agrees that this should be so. The one that all said was a good man before, they all now say is bad. Then the sisters go along to tell the other brother who says, 'Go and tell my elder brother.' The sisters reply that he is not a good man and say, 'We want you to look after us.' He agrees and goes to the diviner to get medicine.

The next morning a husband goes off to his village without saying goodbye.[1] The wife now goes along to tell her younger brother who says that he can do nothing about it and that she will have to tell her older brother. She returns to her village crying, and tells her sisters that she told her brother about her husband's leaving and that he refused to have anything to do with it. Then one of the sisters says, 'Yes, the older one is a good man, not like that bad young one. If this one were the older one he would have already gone to get the man back.' Others say, 'Yes, that young one is not good at all. He is a sulky one. Is he not a sorcerer? Go to the big one and tell him.'

Then the woman goes to the hut of the older brother and tells him of her difficulties. He tells her to go and fetch her husband and if he refuses to come back, to tell him. This she does and he refuses to return. She reports this to his elder brother. He tells her that his younger brother will return and if he does not they will come to talk matters over. The woman goes back to her village and goes to see her elder brother to tell him what she has done. He says, 'Very well, my sister, if he does not come to-day I shall go there to-morrow. Now go home and give the children some food.' When she gets back to the village she says, 'That brother is a good one indeed. He is diligent. He is going to fetch my husband back, if he does not return to-day.' If the man has not come by the next morning the woman goes to tell her brother. He goes to the husband's

[1] *Kwendeka*—to go off in a huff, to go off without saying goodbye. This is a sure sign that there is something wrong and that some action needs to be taken.

2: Mitchell E-5 (1946-1949) 1956 FT7 Yao FT7

village and seeks out his marriage surety. They call him and tell him that the woman's brother has come to take him back to the village. He says that it is all right and that he will follow that evening. The brother goes back and tells his sister to cook porridge because her husband will be coming that evening, and then he goes home. The husband returns.

The woman now goes to tell her brother that her husband has returned and he says that he will come to visit him in the morning. Next morning her brother comes to the hut and asks her husband why he had left. 'You were cross about something and you did not come to tell me. Now tell me why you left.' The husband now tells him and they talk it over. If they fail to reach an understanding they go to tell the husband's sureties and discuss the case fully. If the woman is wrong her brother reprimands her and if the man is wrong his sureties reprimand him.

To live with a sorority-group needs courage.[1] You must not listen to backbiting. If you listen to the tales of others then you will not be able to live with your sorority-group because your heart has no fierceness. A sorority-group needs a man who has no fear. Then the women listen to what he says. He will say to his sister, 'Sister, hoe your gardens well. Do not have intercourse in the bush because it will finish your children with salt.[2] You must respect your husband and not tell him lies because he will not trust you and will be frightened of you. Listen to what I tell you. Things will be peaceful in your house if you come to tell us what is going on. If you do not tell us then there will be lots of friction.' Then the people say about a man whose sisters are not very happy, 'Who is that man who is not teaching[3] his sorority-group well?' Then the people will mention his name and they will laugh at him. If the sorority-group are living happily together he is a good man and he does not listen to the backbiting. His sorority-group are obeying him well and he lives happily with them.

In this account one cannot but be struck by the ambivalence of the relationship of brothers and sisters. Now they hate each other and now they love each other, depending largely on the fortunes of the moment. But the tie is the strongest in Yao social structure; while the relationships between the sorority-group and any particular brother may vary, the relationship between brothers and sisters in general is unassailable. When

[1] *Ifidichidiko ntima*; perhaps more literally translated as 'a soft heart'.
[2] A reference to adultery. See Chap. V, p. 112.
[3] In the sense of teaching them the right way to live, as their mentor.

593 one brother is unsuitable, they turn to another, uterine or collateral, and only if he too is unsuitable do they then turn to other relatives.

The attitude of Naliwa shows very clearly, too, the dependence of the women on the man. They have to wait for his action before they can settle their difficulties. This is part of the general process of internal differentiation within the lineage. The women become organized into small groups, each under the care of a man. These are siblings, so that their common descent, well expressed by the Yao *mucimbo cimo*, 'in one womb', is the real unifying bond between them. When a Yao wants to express his close link with his uterine sister, that is to emphasize that she is not a collateral or classificatory sister, he stresses that they are from 'only one womb' (*cimbo cimpepe*). Naliwa says that a man who controls his sorority-group so that they live happily together is a happy man. He is happy also because his prestige is enhanced if he is a warden of a sorority-group. Being a warden is the first step on the ladder which leads eventually to independent village headmanship, and the man who has a large sorority-group under him can achieve this aim more easily. Therefore, the warden of a large sorority-group has even higher prestige than a man who has only a few sisters to look after. But the aphorism that 'chieftainship is slavery'[1] achieves significance when a man acquires more dependants.

Segmentation and Fission in the Matrilineage

613 621 The sorority-group organization in the matrilineage assumes most significance when viewed in its political setting. Segmentation and differentiation within the matrilineage consistently leads to splits, hence to village break-ups and the birth of new villages. Fission in the matrilineage usually appears when the wardens of the younger sorority-groups are over the age of 30. At that age each man is adult and therefore old enough to be responsible for his own and his sorority-group's actions and, usually, his mother's brothers, who when alive had kept their younger relatives united, are dead.

The events leading up to a split in a matrilineage usually follow

[1] From Smith and Dale, *The Ila-speaking Peoples of Northern Rhodesia*, Macmillan (London, 1920). For its significance, see Gluckman, Barnes and Mitchell, 'The Village Headman in British Central Africa', *Africa*, xix, 3.

693 as he was supposed to be the sorcerer. Suspicion fell on Mbwana
578 Soma and eventually one of his sisters went back to Mwambujila and
621 complained to him. Later the sisters consulted a diviner and found, as they suspected, that Mbwana Soma was the sorcerer. Thereupon, they returned to Mwambujila and left Mbwana Soma living alone with his wife.

Here is an example of a village which did not manage to maintain its identity but returned to be re-integrated into its village of origin.

578 Conflicts between collateral brothers are not frequent. This
593 is for two reasons. Firstly, the opposition between lineage
621 segments is usually expressed in a conflict between a man and his mother's brother, a fact which is no doubt related to the opposition of proximate generations. Secondly, lineages seldom persist long enough to contain within them several segments in which collateral brothers are leaders.

Conflicts seem to occur more frequently among uterine brothers, a fact which is significant in the light of the particularly strong bonds which unite them. The relationship between uterine brothers is much the same as that between sisters.[1] They are intimately linked by their bond of kinship and depend on one another for care and support. Usually the elder brother has his younger brothers in his care, in the same way that he has his sisters.

But at the same time they compete for the control of the sorority-group. A man, we have seen, can seek prestige in the indigenous political system only by becoming a village headman. He can become a village headman only by mustering his sisters and setting up a small hamlet with them. The elder brother prevents his younger brothers from doing this because the sorority-group is usually under his care. The younger brother can gain control only if he can persuade his sisters that the elder is a sorcerer, or incapable, or in some way unsuitable for his position. Hence the frequent accusations of sorcery among brothers: it is a rationalization of a hostility arising from the structural position of uterine brothers, which, in view of the commonly accepted strong sentiments uniting brothers, may not be otherwise expressed.

The break-up of Mponda's village in 1940 clearly illustrates

[1] I have dealt with this more fully in my essay in *Seven Tribes*.

2: Mitchell E-5 (1946-1949) 1956 FT7 Yao FT7

how the opposition of brothers emerges in a situation where the lineage is concerned. 578 593 621

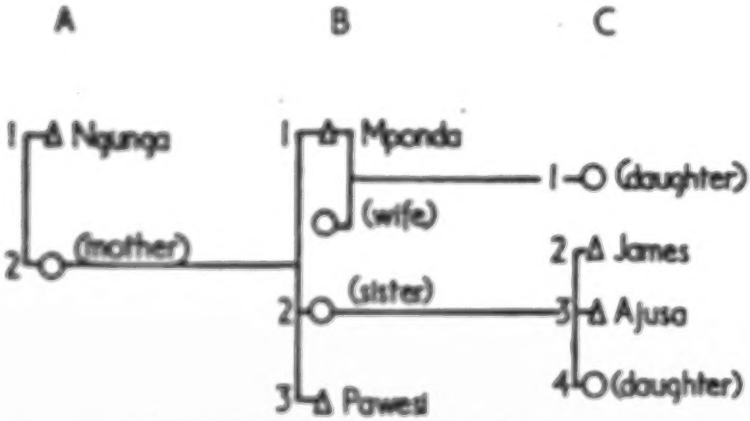

Reference Genealogy. Mponda Village.

Mponda, a village headman, was married virilocally. One day his daughter went to the pounding point in the village and found that her cross-cousin, the daughter of the headman's sister, was there. A quarrel arose between the two girls over the pounding mortar. Presently they started to fight. The wife of *Mponda* then came out and caught hold of her husband's sister's daughter and beat her. *Mponda's* sister had gone to draw water and was just returning. She heard her daughter crying out and ran to the place to find her sister-in-law beating her. The two women had a quarrel about this and separated with bad feelings. The next morning the quarrel broke out again. In the altercation that morning the headman's sister rebuked the headman's wife for behaving in a way which did not befit her position. The headman's wife on the other hand threatened to leave the village if this went on. The bickering continued for some time and eventually the two women came to blows. The headman's sister, who got the worst of this encounter, now decided to take the matter up to the headman. When she told him about it he refused to listen to her complaint. He told her that he had brought his wife to the village and that he did not want to have her treated like a slave. Another sister now chimed in and said that *Mponda* ought to invite his younger brother along to help him to settle the case. Another recommended their leaving him altogether because he was telling his wife to despise his sisters. To this *Mponda* replied that the village was his and that his sisters were only children

2: Mitchell E-5 (1946-1949) 1956 FT7 Yao FT7

578 and that he could not understand who could be inducing them to
593 talk like this. He told them also that as far as he was concerned they
621 could report the case to whomsoever they wished. The women came out of the hut and went straight to Pawesi who was the headman's younger brother. He told them to go back and to wait a while before they took further action.

578 After four days had passed the headman's sister who had fought
593 with the headman's wife, became ill. In the morning the sisters sent
754 a message to Mponda but he did not come. They sent another
787 message to Pawesi who came and asked if they had told Mponda. They said that they had, but he had refused to come. Pawesi called James and Ajusa, the sister's sons of the headman, and told them that he would tell the headman that they were going to find out the cause of the illness. This they did. The diviner indicated that the headman had caused the illness by sorcery, because of the fight between his wife and sisters. Pawesi tested the divination by giving a chicken some poison. It died, indicating that the divination was accurate. He took the chicken's head to Ngungu who was Mponda's perpetual mother's brother.

When Ngungu heard this he refused to believe it. However, he agreed to send for Mponda and to ask him about it. When he did so Mponda denied the accusation. Ngungu now produced the chicken's head and accused Mponda of being a liar. At that moment a child came to tell them that the woman was dead and the interview ended. They went to the funeral and the next morning they decided to have a post-mortem meeting (*mapete*) in order to decide the cause of the death. Mitomoni, one of Nyambi's perpetual sons, represented the chief. Ngungu opened the discussion by telling the meeting that the woman had been killed by the headman because of the fight between his sisters and wife. Mitomoni asked how they knew this and Ngungu told of the divination and the poison ordeal. He then asked Mponda if he had heard what had been said and what he had to say. Mponda replied that he knew nothing of it. Ngungu said that Mponda was a bad man and that the others would leave him and he would have to live alone. Mitomoni told Pawesi and Ngungu that they must not leave the village. Ngungu replied that it was impossible to stay there while Mponda was so bad. If the women stayed with him he would finish them all. Pawesi collected 30 of the 40 huts that made up the village and took them away to Chikwesi's area, a distance of about 15 miles. Those who stayed behind with Mponda were his 'children' and some unrelated people.

593 This case brings to the fore the position of the younger brother
578 as a constant challenge to his elder for the care of his sisters.

2: Mitchell E-5 (1946-1949) 1956 FT7 Yao FT7

The threat that lies over the head of an inefficient warden of a sorority-group is that of losing them to his younger brother, and it is scarcely possible to exaggerate the frequency with which this takes place in Yao society.

Intra-lineage Tension and Succession Disputes

The competition between brothers is heightened where the succession to an important name is involved. The rule of succession indicates a man's eldest sister's first-born son as the rightful heir. Informants in Jalasi's area told me that long ago the succession used to pass along the line of collateral brothers first, before dropping a generation to the sister's sons. It is true that in Jalasi's genealogy there are one or two early successions from a man to his most senior brothers, but recently the succession has passed regularly to sisters' sons. MacDonald, writing in 1880, quoted the succession rule for the Mangoche Yao to be 'from a man to his eldest surviving brother and then to the sister's son',[1] but he describes in another part of the book the dispute for Malemia's name involving the deceased chief's younger brother and his sister's son, in which the sister's son's claims prevailed over those of the younger brother.[2] Stannus, writing of the Machinga in 1922, gives the rule of succession as I found it,[3] and suggested that MacDonald's interpretation of the Malemia succession dispute in 1875, was really a mistake, and that both disputants were sisters' sons of the head chief, but of different lineage sections. I cannot decide which account is true, but there seems to be no reason why MacDonald's general rule should be incorrect, especially since so much of the other material he recorded seems to be accurate. Also, as far as I could see, there are no differences in the Mangoche and Machinga Yao in successions to-day, so that it seems likely that there has been a change from adelphic succession to a straight system of matrilineal primogeniture. One is tempted to find a reason for this in the strong emphasis on patrilineal primogeniture in Islam, which was becoming widely accepted in these areas in the middle of the nineteenth century. Unfortunately I cannot bring direct evidence to support this hypothesis.

While the succession rule may indicate someone as having the

[1] MacDonald, *Africana*, i. 189. [2] MacDonald, *Africana*, ii. 190.
[3] Stannus, 'The Wayao of Southern Nyasaland', 277.

village but called it Mtuweni and not Mpumbe village. The positions of the lineages in the village would have become inverted, and the patrilaterally-linked lineage become the dominant lineage. In this way villages may change their name or they may acquire two names, as happened to Mlungu village in Nyambi's area. Here a man called Masalu took over the control of the village. He was the son of the previous Mlungu and the village is known to-day by either of these names. The interesting point is what will happen when he dies, because there are now sisters' sons in a distant lineage old enough to take charge of the village. The rule is, as we have seen, that the matrilineal relatives always have the first claim.

Paternity and Segmentation

It is interesting to note that the paternity of brothers or sisters is not a differentiating feature in these social relationships. In the discussions which have hinged upon the care of security-groups I have never heard the paternity of brothers and sisters brought up as a reason why they should hold more or less closely together. The father is important in social life as I point out later, but while groups may be linked through paternity, it does not lead to a second principle of segmentation within the lineage.[1] This is manifestly the result of the fundamental difference in a system of matrilineal descent, where paternity is of less consequence than maternity is in a patrilineal structure. Among the Yao, unlike the matrilineal peoples of Southern and Northern Africa, no marriage payments are made; divorce is easy and frequent, and there are no disputes about the custody of children, who always belong to their mother's group whether they are illegitimate or not.[2] This is consistent with the view of the husband as a mere begetter of children. Among the Yao, the

[1] This aspect of segmentation in patrilineal peoples, with different views of men as points of fission, is brought out particularly in Evans-Pritchard, E. E., *The Nuer*, Oxford University Press (London, 1940), and *Marriage and the Family among the Nuer*, R.-L.I. Papers, No. 11 (1944); Fortes, M., *The Dynamics of Clanship*, and *The Web of Kinship*; Kuper, H., *A Black Aristocracy*, Oxford University Press (London, 1947).

[2] This has been worked out in Gluckman, M., 'Kinship and Marriage among the Lozi of Northern Rhodesia and the Zulu of Natal', in Radcliffe-Brown, A. R., and Forde, C. D. (eds.), *African Systems of Kinship and Marriage*, Oxford University Press for the International African Institute (London, 1950).

2: Mitchell E-5 (1946-1949) 1956 FT7 Yao FT7

593 sisters are the points of cleavage in the matrilineage and the
64 group of uterine sisters is seldom divided, unless their daughters are old enough to form a corporate group and to move off with their mother to found a new village under their brother.

The Spatial Representation of Lineage Segmentation

361 The segmentation of the matrilineage is also shown in the
613 spatial distribution of the huts in a village. The daughters of
621 the women of the matrilineage set up their huts near to their mothers', and as this continues over a number of years, the internal segmentation of the matrilineage is automatically reflected in the disposition of huts. Most Yao villages will show this spatial representation of social distance, some more clearly than others. The clearest example I have is in Mesi section of Majoja village, Nyambi's area. The disposition of the huts is set out in the village plan in Appendix C. Here are five fairly distinct groups of huts in the village. Four are descendants of four uterine sisters, the children of the previous Majoja. The space between these four groups is cleared and paths reticulate among the huts. About 200 yards away, the fifth group is out of sight of the others and must be reached by a path leading through the fields. In this cluster of huts live the children of the uterine brother of the four sisters. The matrilineal relatives of Majoja live about half a mile away in a quite distinct cluster.

In Cikoja village the same principles are at work but the situation is somewhat obscured by the number of patrilineally-linked relatives. A glance at the village plan in Appendix D shows that the major segments, denoted by the symbols Ma and Mc in the plan, are quite distinct in the old village site, the huts of Ma being separated from those of Mc by a broad path and by a patch of bamboos. In the new village site across the stream the same general segmentation is shown where the two sections, Ma_1 and Ma_2, are separated by a path.[1] The separation of the clusters of huts is difficult to represent on a diagram because not only are the huts placed in discrete clusters, but they face in towards one another and the space between them is kept clean. Between the clusters there may be rubbish heaps and small garden patches. I describe later how the village continually

[1] I describe how this section of the village came to be across the river on p. 189.

2: Mitchell E-5 (1946-1949) 1956 FT7 Yao FT7

against Cikoja himself. It is important that not once is a member of the junior major segment, that is a descendant of Citileka (A2), involved in the dispute. Only the descendants of Atabiya (D1) and Amalimia (D2) are involved, with the exception of Salima who appears as the representative of the villagers on the old village site.

The Opposition of the Generations

Segmentation arises as more and more security-groups, the daughters of women, reach adulthood, and as the sons of the same women become old enough to undertake responsibilities for the care of the women. There is, in this situation, a fundamental opposition of generations. A woman is bound to her own sisters and at the same time she is bound to her daughters. These bonds come into conflict when her daughters want to express their unity against their mother's sister's daughters. The mother must decide whether she will go with her daughters to their new village site, or whether she will stay with her sisters and possibly with her own brother. I found consistently that a mother seldom stayed in a village when her daughters were moving out of it. The bond with her children is stronger than that with her sisters. Yet the conflict is clearly present. It finds expression in the kinship terminology. A daughter is usually identified with her mother's mother. A woman's daughter's daughter inherits her name, her position and her property in much the same way as a man succeeds his mother's brother.[1] When this has taken place the terms of address of her parental generation are now reversed. In other words her mother's brother instead of calling her, '*sister's child*' (*ipwo*), calls her '*mother*' (*amai*). Sometimes the qualificative *ulamuje* ('who has returned') is used to signify the difference. Her mother's mother's husband even before the succession has taken place calls her '*my wife*', and I have recorded one or two marriages between a man and his wife's daughter's daughter. A man's daughter's daughter must also perform some of the funeral rites for her grandfather after his wife has died.[2]

We have among the Yao, therefore, the familiar principle of

[1] See Chap. V, p. 111.

[2] She cooks the ritual meal which he eats at the end of mourning to protect himself against ukubo. Here she clearly fills her mother's mother's place.

2: Mitchell E-5 (1946-1949) 1956 FT7 Yao FT7

the identification of alternate generations; and this is particularly significant when we realize that the tension between the filial and parental generations is most likely to find expression in the situation where a group of young adult women wish to leave a village, and their mother, if she is still alive, must make up her mind whether to stay or to follow them.

The existence of rules of succession for men, different from those for women, presents an interesting analytical problem which I have not yet fully explored. Clearly men must succeed to positions in the first ascending generation, for they are the active leaders in Yao society and those who are to succeed must be sufficiently mature to take over the responsibilities of leadership. Women, on the other hand, are usually not leaders so that succession to positions in the second ascending generation involves no difficulties. A young woman may take her mother's mother's name without involving any responsibilities of leadership. Yet the interaction of the two systems of succession presumably has some reaction on the social structure. A man's sister's daughter who succeeds to her mother's mother's position becomes the man's mother and the man's mother's brother's sister. The man's own sister becomes his mother's brother's mother.[1] The effect of this presumably is to achieve some balance of power between a man and his mother's brother. By the rule of succession for women, a man's sister to whom he is tied by the closest possible ties of kinship, and on whom he is dependent for political success, becomes his mother's brother's mother, so forming a common link between two potentially opposed persons. By the same reasoning a man's sister's daughter who is part of his sorority-group and who is likely to desert her mother's mother's brother to go with her mother's brother if there is a conflict, by succession becomes the sister of her mother's brother's mother's brother, so forming a unifying influence within the lineage. This problem emerged after my fieldwork was completed so that I have no evidence to support these suggestions.

Among the men, because of the struggle for political power, the opposition of alternate generations is much stronger than among women. This emerges most clearly in the institution of marriage sureties.

The duties of the marriage sureties towards their wards are

[1] I am grateful to Prof. Gluckman who pointed this out to me.

CHAPTER VII

THE PATRILATERALLY-LINKED GROUPS

The Position of the Husband and Father

MATRILINEAL descent provides the principle on which the smallest of villages, the hamlets, are organized. But not all villages are made up of huts owned by members of one matrilineage as in Ali Kasunka's village.[1] Most villages in fact have a more complex internal organization which may be epitomized as a dominant matrilineage which carries the village headmanship, and a number of subsidiary lineages linked to the dominant lineage by various means. The most common of these is the patrilateral link whereby the subsidiary lineage is connected to the dominant lineage through one of its men.[2] The subsidiary lineage develops in the village from the matrilineal descendants of the virilocally-married wife of one of the men of the dominant lineage, so that the subsidiary lineage, initially at least, are the 'children' of one of the men of the headman's matrilineage. Their peculiar position in the village must be seen in the light of the general position of the father in Yao society.

The father, obviously enough, is also a son-in-law; obvious as this may seem in English it is charged with meaning for the Yao. When parents-in-law refer to their daughters' husbands they use the term *akwewe*; and they in turn are called this by their sons-in-law. But the *akamwini* are essentially men who are living uxorilocally and *akamwini* is the general status of being a man in uxorilocal marriage. *Akamwini* thus cannot be translated into English without periphrasis and I translate it merely as 'husband'. I emphasize, however, that whenever I speak of *husbands* or the *husband* in general I mean 'husbands in uxorilocal marriage'. The Yao assume that marriages as a rule are uxorilocal. Usually the young husband builds a house in his wife's village and is expected to live there for the rest of his life. But

[1] See Chap. VI, pp. 140-3.

[2] I have called this type of village structure the 'theory' in my earlier essay, 'The Yao of Southern Nyasaland', *Seven Tribes*, 330 ff.

2: Mitchell E-5 (1946-1949) 1956 FT7 Yao FT7

613 he cannot escape the fact that in his wife's village he is only
●593 a 'billy goat' and that his 'true home' is in his matrilineal
606 village. The pull of the matrilineal village on him, therefore,
591 is always very strong and he is constantly trying to return there.
621 His wife's responsible relatives are constantly trying to avoid this because they know that in time they are likely to lose the children who will probably settle in their father's village if they grow up there. In general, therefore, a husband must have a very good reason before he can get his wife's kinsmen's permission to take her and her children to his village. His wife's relatives do not easily yield. But a headman must live in his own village so that nearly all headmen bring at least one of their wives into their villages. Other men sometimes succeed in doing so especially if their wives are past child-bearing, but it is typically the headman's wife who lives virilocally.

621 The husband's interest in returning to his matrilineal village
591 is heightened by the fact that a man in his wife's village is looked
599 upon as the typical man without prestige: a stranger, whose duty is largely procreative. The theme song at the initiation ceremony where the husband was compared with a billy goat, and the common epithet 'chicken rooster' for a husband, reflect the attitude of the Yao towards him. In the song I quoted, the husband was said to be unable to climb high in his village of marriage, however rich he may become.[1] He is, nevertheless, an essential member of the village and the Yao say that it can succeed neither economically nor physically without his aid.

A husband becomes more important when he stays in a village for a long time. He becomes known intimately to the villagers and is conversant with their affairs. He is, therefore, able to advise on many private intra-lineage and intra-village affairs and may even become a marriage survey if there is no more suitable person available. Also in time the husband's position in the village changes. As his children grow up and become active members in the matrilineage, his position of husband becomes supplanted by his position of father, which, in a matrilineal society like that of the Yao, is significant in the same way as that of the mother's brother is in patrilineal societies.

593 The Yao recognize the close bond between father and child.
60. This bond is conceived to be both social and physical and is

[1] See Chap. V, p. 119.

2: Mitchell E-5 (1946-1949) 1956 FT7 Yao FT7

rationalized in the Yao theory of conception.[1] They believe that after intercourse the semen clots and embeds itself in the womb. From this the child develops and is nurtured by the mother until it is due to be born. Subsequent acts of intercourse add semen to the body of the child and make it fat. Semen from other men may be used, too, to feed the child in its intra-uterine life, but its body and blood are derived from the semen which first clotted. In Yao opinion there can be one father only.

Not all acts of intercourse lead to impregnation because sometimes, for various reasons, especially in immature women, the semen fails to clot. There is therefore, to the Yao way of thinking, some difficulty in determining the 'father' of a child. This difficulty is met by the belief that the intra-uterine child in some way knows about the doings of its parents and in particular knows who its father is. It therefore refuses to be born unless its father is recognized.[2] Hence if a child is born without undue puerperal complications it is assumed to be the offspring of the man who is currently living with its mother. If labour is prolonged, however, the relatives call for confessions (*kupaw*) from both husband and wife. The husband's confessions are usually formal and simple. The wife's confessions on the other hand are detailed and complete. She confesses the name of an adulterer, and her midwives, including the husband's sisters as his witnesses, wait for the next birth-spasm. If the child is not born at this spasm she is told to confess again. Only after she has confessed to a lover whom the Yao assume to be the genitor will the child eventually be born. After this the aggrieved husband summons the adulterer to court and he is made to accept the fatherhood of the child.

The act of formally accepting the paternity of a child, which is also done when a woman has a child out of wedlock, confers rights of two types on the child. The first set of rights is directly economic and physical. The father is expected to give the mother salt, money for relish, and cloth to help her rear the child. But this side of a father's duties to his child ceases as soon as another man marries the woman. The new husband then takes over the

[1] I have dealt with this more fully in *Marriage among the Matrilineal Yao*.

[2] It also refuses to be born for other reasons, but the first considered is always the adultery of its parents. See p. 158.

2: Mitchell E-5 (1946-1949) 1956 FT7 Yao FT7

• 593 586 economic responsibility of all the woman's children regardless of whether he has begotten them or not. For example, people say that a woman married my clerk so that she could have her son initiated. The costs and fees for this boy's initiation amounted to over a pound.

593 607 The other set of rights that paternal recognition confers on the child are the moral rights against his paternal kinsmen. A person may turn to his 'father's people' (*bwitati*) in times of dire need, especially if one of them is rich. This right persists after divorce, though the children are adult and otherwise economically independent. For example, a woman who was married to a labour migrant needed clothes badly. She turned to Chiwalo her father, though he had been divorced from her mother for more than 15 years. People in trouble often run away to their father's village and find shelter there. A man who wanted medicine for success in gambling asked his father for it. Another who had broken a sexual taboo confessed to his father who found suitable medicine for him. In each of these relationships there was an intimate personal element.[1] A person has the moral right to appeal to his father or paternal kinsmen, but he has no legally enforceable right to demand help. He has to rely on their kindness and charity. There are few fathers who would deny their children's requests if they are reasonable, but they can if they wish to.

593 586 613 The divorce rate is high among the Yao[2] and a typical family of five uterine siblings may have three fathers. Furthermore, a man should not marry into the lineage segment where his brother has married, so that the patrilateral kinship ties of the members of matrilineages tend to spread widely in the vicinity of the village. The effect of this is that the members of the lineage as a whole have widespread connections with neighbours upon whom they may rely in times of distress. But of the individual members of the matrilineage only a few share the same group

[1] Compare Forde's description of uterine kinship among the Yakoma: '[It] is essentially by a personal bond, a bond of mutual interest and concern existing individual to individual', *The Web of Kinship*, 55.

[2] Eight of every ten men and women over the age of 40 have experienced a divorce at some time of their lives. Excluding the contingency of death a married couple have only 50 chances in 100 of living together for 10 years. For details, see *Marriage among the Mashingo Yao*.

I: Mitchell E-5 (1946-1949) 1956 FT7 Yao FT7

of patrilateral kinsmen, so that these bonds are personal and distinctive for each member.

The Development of the Corporate Identity of Patrilaterally-linked Groups

The parent-child relationship is reflected in the structural relationship of a patrilateral group to the dominant matrilineage. Children are less strongly tied to their father than to their matrilineal kinsmen. Usually when a woman dies or is divorced while living virilocally, her children return to her matrilineal village. If the children are too young to express their own wishes, their mother's brother comes for them and they are formally returned to their village of origin. Occasionally children who have grown up in their father's village, especially if they have married their cross-cousins there, refuse to move back to their matrilineal village. They prefer to remain in their father's matrilineal village where they know people more intimately. In time, as they grow older, the women have daughters who may marry uxorilocally and thus a section of a foreign matrilineage begins to develop in the village.

The village as a social unit is more closely integrated when the children who are living there with their father are still young. They do not yet form a corporate group within the village. Their affairs are supposed to be controlled by their mother's brother, but in fact the headman, who is usually their father or a paternal kinsman, may settle many of their minor difficulties and find medicine for lesser illnesses, without bothering their mother's brother. When the children become adults and begin to assert their own wills the position in the village becomes more unstable. As the daughters grow up and marry, their brothers become their junior marriage sureties. If the mother's brother lives far away, the father of the children may be the senior marriage surety. He still has a personal attachment to his children, but his sons' relationships with him may now become affected by structural elements as they tend to interact, with him and others, in certain situations as representatives of corporate groups. As the village develops a son takes over the position of senior marriage surety to the headman's wife's descendants and he becomes the senior male lineage member, while his sisters' sons begin to take over responsibilities for their sorority-groups.

2: Mitchell E-5 (1946-1949) 1956 FT7 Yao FT7

593 613 621 The headman and father is now no longer directly concerned in the affairs of the linked lineage, and may only appear in their affairs formally as an adviser or an arbitrator in disputes. For example, he is advised of deaths in the village and of the disputes that have arisen and been settled. But this is part of his relationship to the linked lineage because of his headmanship. A fairly long-established village, therefore, contains two, three or four related lineages with complete autonomy in internal affairs yet together forming one community—one village under the leadership of the headman. As the village persists in time and successive village headmen and other men of the dominant matrilineage bring their wives into the village, related lineage segments develop from them, and the internal structure of the village becomes more and more complex.

613 621 An example of a village of this kind is Cikoja. It has 47 huts.

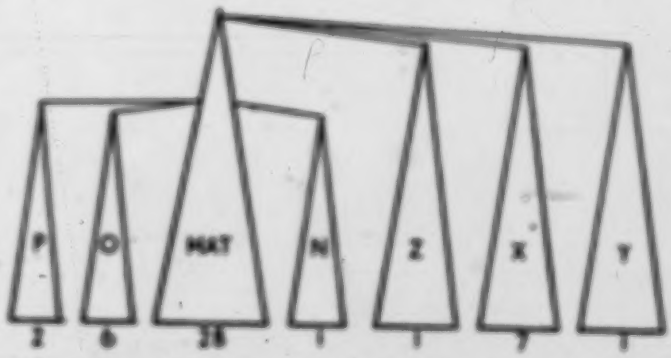

Diagram 4. The Ownership of Huts in Cikoja Village.

One of them is a dormitory for adolescent boys and we may ignore it in this analysis. Members of the dominant matrilineage live in 28 of the huts. Members of patrilaterally-linked groups are living in the remaining 19 huts. There are 6 of these patrilaterally-linked groups in the village and I have indicated them by the letters N, O, P, X, Y and Z. Their origin is as follows:

Z	A descendant of Cikoja IV's first wife	1 hut
X	The descendants of Cikoja IV's second wife	7 huts
Y	The descendants of Cikoja IV's third wife	1 hut

There has never been any shortage of land and therefore the plotting out of gardens was a matter which caused little trouble. A man wishing to make a new garden the next season simply marked the site in the bush by cutting some trees or hoeing around some patches of grass and tying the grass ends into a knot. If anyone else came along and heard this plot, the man who had marked it out still claimed it and could not pay for the hoeing done. Whenever a man was doubtful about a piece of land, he would ask advice of the headmen of the village. 423

When an abandoned garden had become overgrown, anyone wishing to take it up applied to the headmen who sent him to ask the original owners whether they wished to take it up again. The newcomer could take possession only with their permission. 361

Often if a village was moved, during the first season the people simply put up shelters in their gardens. Later, the site of the village was chosen and around it a medicine was sprinkled medicine to insure happiness and prosperity. The tree from which this medicine was made became sacred to the village and might not be used for firewood, or was subject to any other taboo the medicine man might care to make. He might also say, "In this village there shall be no pounding of grain at night," etc. 423 [789] [178]

If a village were to be built near a spot previously inhabited, medicine and offerings were made to the departed spirits of the former occupants to put them at rest and "open" the place to the newcomers. The bone-pot from the grave of some former chief or headman, who was supposed to have directed the destinies of the old village, was brought to the new location and bone placed in it to insure his continued guidance. [362]

In the case of a village into which a number of men had married, the spokesmen of the wives went to the spokesmen of the husbands and asked permission to move the village. Later, beer was brewed in the new village and the spokesmen invited to come and drink and "put feet in the new village." [203]

Relationship. Family relationship among native presents certain difficulties to the European accustomed to equivalent relationship of males and females on both sides of the family. In the diagram below (Fig. 1) the relationship of the two children (C 1) will be traced. The mother and father (B 10 and 9) are the subjects and were but are addressed as sister and sister. The maternal uncles (elder and younger than the mother (B 11 and 12) are called *alombwa* and their wives (B 13 and 14) *alongwa*. The maternal aunts are addressed as *anna*, mother, anyone older than the mother being distinguished as *anna mukulungwa*, "the bigger" (B 15), a younger aunt as *anna nnunuli*, "the lesser" (B 17); their respective husbands are addressed *atati*, *atati mukulungwa* (B 16), and *atati nnunuli* (B 18). On the father's side the uncles are called *atati mukulungwa* (B 1) and *atati nnunuli* (B 2), respectively, for those older and younger than the father, and their wives *anna mukulungwa* (B 3) and *anna nnunuli* (B 4). The paternal aunts are called *atati mukuqwa* (female uncles) (B 5 and 7), their husbands (B 6 and 8) *atati*. 595 601

* This repeats p. 356.

The children of maternal uncles (C 6 and 8) and of paternal aunts (C 3 and 4) are called uncles sakaiawat (dog, wolves?), and, conversely, the children of maternal aunts (C 7 and 9) and of paternal uncles (C 1 and 2) are called "brothers and sisters"; one would address the other as "chemmik" or "sakiawam," but either is whole to the other.

It is interesting, therefore, to note that avunculity is of two kinds: the relationship between a child and his maternal aunts' children or his paternal uncles' children is uncle, whereas the relationship with his maternal uncles' children or his paternal aunts' children is sakiawat.

It is easily understood why the maternal aunts' children are considered as brothers and sisters, as among the Tsa, patrilineal descent is the rule, the children taking the clan of

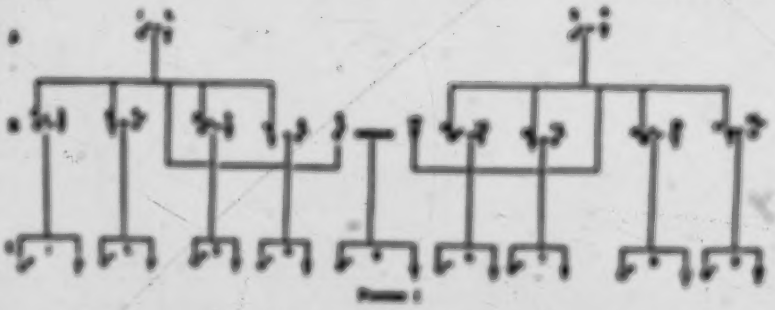

Figure 1

the mother. In the diagram, this is indicated in black. That the paternal uncles' children bear the same relationship would seem to indicate that patrilineal descent is not absolute but that dual descent from both parents is recognized.

Children C 5 may not marry C 7 and 9, nor C 1 and 3. In the case of the former, this is because persons of the same clan may not marry, but in the case of the latter, no such reason is given but they are simply said to be brothers and sisters. Children C 6 may marry their cousins C 8 and 9 and C 3 and 4, but this is not very common as it is said such marriages are always unhappy.

The wife of a maternal uncle (B 10) speaks of her nephew by marriage (C 8) as mwami, husband, because, in the event of her husband's death, this nephew would inherit from him and he might marry the widow.

A parent-in-law or child-in-law is called mkwapan kalikwanzi. Paternal and maternal grand-parents, and grand-children and aunts are all called ambajo; a grand-child, chimbuda.

The words sisi and mwa commonly mean father and mother, but, as given above, there are other words for these two parents, whereas sisi and mwa are applied to certain aunts

marriage-money for the marriages of the members of the group. Briefly this means that he must be approached before a marriage can be legally contracted by any member of his charge, he or his representative is present at the ceremony which formally sanctions the marriage, and he is responsible for the behaviour of his female relative in that marriage. Third, he is immediately concerned with the physical welfare and health of his sorority-group. He must track down the sorcerers causing their illnesses and supply the medicine to heal them. He has to arrange for the ritual purification of sorcerers after the death of one of the sorority-group's members. Fourth, he must be present in the court-house if one of his charges is involved in a case and he is usually looked to for the money for the fine. I have known a case not to begin because the warden of the sorority-group was not present. Frequently if the husbands of the female members of his charge default, he has to provide the hut-tax money.

Usually the warden of the sorority-group is the eldest brother of a group of adult full sisters. The younger brothers of the group of sisters, while concerned with their welfare, do not stand in this particular responsible position. They refer to the sorority-group as "our sorority-group". The elder brother refers to the sorority-group, he is wont, as "my sorority-group", and this sets him over and against his younger brothers. The position that the warden holds, however, is not rigidly fixed, for a younger brother may assume control of the sorority-group if for some reason he is dissatisfied with the way in which affairs are being conducted, and is able so to assert himself.

If we recall that the status of a man in a Yao community is determined by the number of dependents that he can command, it is easy to see that relationships between an elder brother and his younger brother are distinctive. The elder brother is responsible for the actions of his younger brother in much the same way as he is for one of his sorority-group, and the younger brothers have a great emotional attachment to their elder brothers. Yet at the same time the elder brother stands in the way of the younger brother in his striving for status, in that while the elder brother is warden of the sorority-group the younger brother cannot [illegible] and therefore cannot have dependents and status. It is not surprising to find that accusations of sorcery are frequently made between brothers and the result often is that the younger brother takes the sorority-group away from his senior brother to some other place and sets up a new village with it. Therefore, one possible source of instability in a Yao village lies in the operation of the kinship system in a system of village which endows status by adherence.

I have thus far been describing the simpler types of village. In the larger groups it is common for the warden of the sorority-group to live in the village where his sorority-group is. Then he usually brings one (or sometimes more) of his wives to the village, where she lives patrilocally. The daughters that are born to her do not return to the sorority-group from which the headman's wife came but marry and set up households near their mother in the village of their father. Thus there develops in time a second sorority-group in the village, alongside the first sorority-group, and related to it through the headman. At this point we may say that the man's position has changed from that of headman of a village containing a single sorority-group, to the more complicated and less secure one of village headman over a more hetero-

6: Mitchell E-5 (1946-1947) 1949 FT7 Yao FT7

he noted that only 17—11 per cent. of the whole sample of 148 women—had never married and that 15, 88 per cent., of these (or 10 per cent. of the total) were under the age of 20 and therefore stood a good chance of yet marrying. Furthermore, 2 of the 4 women over 20 who had not married were known definitely to be incapable of marrying (one is insane and the other has violent epileptic fits).

There were 33 women who were divorcees or widows (21·3 per cent.), but it should be noted that 17 (or 11 per cent. of the 148 women) were over the age of 45 and therefore were past, or nearly past, the child-bearing period. Those in the younger age-groups stood good chances of remarrying. Table IV shows that though the divorce rate is high* remarriage is common. By the time a woman's child-bearing period has ended she has been married on the average 1·7 times. Few marriages are contracted after child-bearing ceases.

TABLE IV. *Marriage and Dissolution of Marriage experienced by all Women over the Age of 15*

Present age	No. of women	No. of marriages contracted	No. of divorces experienced	No. widowed	No. still married	No. of marriages per woman	No. of divorces per woman	No. of marriages per woman ended by death of husband	No. of marriages per woman still existing
15-20	16	20	1	—	20	0·90	0·05	0·00	0·95
20-30	38	104	18	2	84	1·10	0·45	0·05	0·61
30-40	30	102	30	18	54	1·73	0·73	0·29	0·79
Over 40	31	88	19	32	37	1·90	0·77	0·65	0·48
Total	148	313	68	52	185	1·58	0·37	0·20	0·67

These statistics, showing the early age of marriage, the early commencement of child-bearing, the high incidence of marriage among women, and the high rate of remarriage during the child-bearing period, all point to the high valuation of reproduction achieved in Yao culture. This is consistent with their social structure, where the major corporate groups are kinship groups and reproduction is the principal method of recruitment to the group. Furthermore, because the standard of living is almost at subsistence level, children do not entail the economic losses they do in Western society. On the other hand, they are expected to support their aged parents when they themselves are economically independent. In other words, there are few factors militating against reproduction and many in favour of it.

We may expect the beliefs and customs surrounding child-birth to reflect the value of reproduction. For instance, the Yao distinguish clearly between women who have borne children and those who have not. When a girl becomes pregnant for the first time she undergoes a special ceremony (*kriki*) attended only by women who have borne children. This ceremony has many of the features of a *rite de passage* and appears to mark the passing of the woman to a new social status. Furthermore, women are ascribed status according to the number of children they have borne. The word *ammali* signifies a young woman who has not yet borne a child; *ammali*

* Between a third and a half of the marriages contracted by women had been dissolved by divorce by the time that the child-bearing period had ended.

2: Mitchell E-5 (1946-1949) 1956 FT7 Yao FT7

613 769 178 memory of the ancestors. These are called *sadaka*[1] and are similar to those held at the end of the mourning period. They are usually held when one of the lineage members has had a dream about an ancestor. The senior members are told of this and interpret it to mean that a feast in his memory should be held. The women cook a meal of maize and relish and on an appointed day the members of the matrilineage who live within a reasonable distance gather at the village of the senior section and share the feast. During this feast Islamic texts are chanted in Arabic. It is clear that in this situation the context of the meeting is exactly the same as that of the old offerings made by the lineage leader at the shrine-tree. The common ancestor is recalled and the matrilineage by meeting reaffirms its solidarity.

The Localized Matrilineage

613 621 The matrilineage may itself be localized in the form of a hamlet or small village, as in Ali Kasunka village. It has 9 huts situated about half a mile from Chiwalo's court house in Kawinga's area. The genealogy, hut plan and census are set out in Appendix B. I summarize the genealogy here to show how the hut owners in the village are related. The village is about 300 yards across and about a quarter of a mile from the main road.

Ali Kasunka (G6),[2] the warden of the village, formerly lived in a village known by his mother's brother's name Malo (B1). Ali Kasunka is the son of the chieftain Mpona in Kawinga's area. The village of Malo still exists in Mpona area. Ali Kasunka and his sisters moved out of Malo village and established a hamlet in Malemia's area near Zomba township. While they were there Ali Kasunka went to work as a domestic servant in Zomba. One day the sister of the cook in the household in which he was working came down to visit her brother. She became Ali Kasunka's second wife (he was already married to a woman from Malemia area) and lived with him in Zomba. She was the daughter of the present chief Chiwalo, and was living at her

[1] Sanderson says that this is derived from the Arabic word *sadaqa* which means 'alms'. Sanderson, M., on 'Ceremonial Purification among the Wayao, Nyasaland', *Man*, xxii, 55 (June 1922), 92-5.

[2] The reference number is to assist the reader to identify the persons on the genealogy in Appendix B.

589 Down of her married life begins. The man and woman live together peaceably enough as
a rule, each attending to his own sphere of work. The man builds the house, the woman
592 made the floor; she scraps and sacks, she is the lawer of wood and drawer of water. The
man hunts, fishes, makes mats, baskets, the grain store, game traps, and bark-cloth; he
looks after the tobacco and makes the snuff, while his wife brews the beer. He it is who
fashions the guard canoes and carves the spoons, while the woman is the potter (Pl. III, 4)
and pipe-maker. Together they hoe and together they harvest, but to the woman falls the
monotonous drudgery of pounding and sifting the corn for flour.

592 The Yao have a custom like that of the Anyanja. A date brings to the house of the
newly wedded pair a log of green wood from a mbanga tree which is very hard; the log
[523] may be two feet in diameter and four feet long. Should the bride not become pregnant
before it is burned away, the husband is laughed at and they may both be teased by having
[508] many logs brought to the house. A man who has no children is much despised and there
is a saying, "He must have eaten some ground-nuts," punning on the word for a thick-
shelled variety of ground-nut, chimbumbu, a word which also means sterility. An impotent
[537] man may, with the consent of his wife, introduce some male friend into the house, any
children born in consequence being claimed as the husband's. He usually chooses some
friend from a distance to obviate any attachment springing up between him and the wife.
Two married couples may, all consenting, exchange consorts for the night, but they never
live together like this for long periods.

592 There is one well-defined marriage taboo; a man may not marry a woman of his own
clan. In the old days he was also restricted to his own tribe, except in the case of slave
[541] wives and wives by capture. Since the clan is inherited from the mother, a man may not
marry the daughters of his maternal aunts, but he may marry his other female cousins.
[547] He may not marry two sisters nor a deceased wife's sister; neither do two brothers marry
two sisters.

595 The number of wives is limited only by the husband's ability to provide for them. In
addition to free wives, a man might formerly have a number of slave wives. The head wife
is called Anapele, the other wives, mangombe. The word given by Macdonald, akangombe,
denoting the junior wives, is a Chinyanja word and, I think, wrongly applied.

592 It has been said that a man always marries into the village of his wife. For this reason,
[547] female children are always prized as it means an increase in the number of able-bodied
men added to the village. In rare cases, the wife might be taken to the husband's village,
[543] as is the Anyanja practice.[1] This, of course, is true in the case of chiefs and headmen. Here,
we may also note that no payment is made for the wife and no dowry is received with her.

589 To revert to betrothal, occasionally the spouses will not agree to the marriage and a
[547] runaway match takes place, but in the end, the marriage is usually regularized by the
spouses coming to an agreement. If, however, the woman has in the meantime become

[1] Vide infra, p. [illegible]. [2] Op. cit., p. [illegible]. [3] Swanson, op. cit., p. [illegible].

They are semi-subsistence cultivators who own no cattle and whose diet is therefore largely vegetables, viz. sorghum and maize meal with ground-nuts and beans and certain leaves together with a small quantity of cassava roots. 105

Marriages are contracted early in life with little difficulty and ceremony. Formerly girls were espoused as mere children, and this still happens, but whether the custom is falling away or not I could not check quantitatively because the memories of the old women who had been married as children forty or fifty years ago could not be relied upon. Table I shows the ages at first marriage for a sample of 121 married women for whom this information was available. 592

Where marriage takes place so early we can expect that the mean age when child-bearing commences will also be early. Table II shows the median age of mothers at the birth of their first child. 163

TABLE II. *Age of Mother at Birth of First child*

Present age groups of mothers	Age of mother at birth of first child									Total	Median age at birth of first child
	[illegible]	[illegible]	[illegible]	[illegible]	[illegible]	[illegible]	[illegible]	[illegible]	Over [illegible]		
Under [illegible]	[illegible]	[illegible]	[illegible]	[illegible]	[illegible]	[illegible]	[illegible]	[illegible]	[illegible]	[illegible]	[illegible]
[illegible]-[illegible]	[illegible]	[illegible]	[illegible]	[illegible]	[illegible]	[illegible]	[illegible]	[illegible]	[illegible]	[illegible]	[illegible]
Over [illegible]	[illegible]	[illegible]	[illegible]	[illegible]	[illegible]	[illegible]	[illegible]	[illegible]	[illegible]	[illegible]	[illegible]
Totals	[illegible]	[illegible]	[illegible]	[illegible]	[illegible]	[illegible]	[illegible]	[illegible]	[illegible]	[illegible]	[illegible]

From these two tables it is clear that nearly all women in the community are married early and that child-bearing commences very soon after marriage.

Table III shows the conjugal status of all women over the age of 15. 162

TABLE III. *Conjugal Status of all Women over the Age of 15*

Present age groups	Never married	Wives of			Divorced	Widows	Total
		Monogamists	Polygamists	Labour migrants			
Under [illegible]	[illegible]	[illegible]	[illegible]	[illegible]	[illegible]	[illegible]	[illegible]
[illegible]-[illegible]	[illegible]	[illegible]	[illegible]	[illegible]	[illegible]	[illegible]	[illegible]
[illegible]-[illegible]	[illegible]	[illegible]	[illegible]	[illegible]	[illegible]	[illegible]	[illegible]
Over [illegible]	[illegible]	[illegible]	[illegible]	[illegible]	[illegible]	[illegible]	[illegible]
Total	[illegible]	[illegible]	[illegible]	[illegible]	[illegible]	[illegible]	[illegible]

Here we see that of all women under 45 (1946), 141 (73 per cent.) are married, though only 83 (43 per cent.), i.e. the wives of monogamists, have their husbands living permanently with them. Another 40 (20 per cent.) were married to men who were married to other wives, so that while their husbands were not living with them permanently they were nevertheless with them periodically. Eighteen other women (9 per cent.) were married to men who had left to work outside the area and hence were not living with their wives at all at the time of the survey. Visits by men to places of work outside the area may last a years or more. It should

BUT IF MATRIFOCAL VILLAGE LIFE USED TO BE CHANGING

on a kinship basis, how far, you may ask, is it still so organized? Very largely. Cross-cousin marriage may be dying out and the bigger homesteads inclining to split up, but society is still fundamentally matrilineal and matrilocal. One or two examples will show in what ways it is changing and in what ways it is fairly stable.

I. An old Yao friend of mine, X, who died three years ago was the grand-mother (*ambaye*) of Y, a village of 13 huts divided in two by a government-built road. Her father was a polygamist; her husband, (dead before I knew her), had had two other wives in nearby villages; when some 12 to 15 years ago she and her family, (*mbumba*), moved here, parts of it broke away, leaving her with a much smaller homestead than that in which she grew up. Besides the abandoned hut of my dead friend X, are those of a sister, two daughters and their husbands, six nieces (the daughters of three different sisters) and their husbands, a widowed step-brother, a step-son who has brought his wife to his home probably because her brother married his sister and so lives at Y, and a "boys' hut", (really a kitchen too), in which sleep or slept the bigger sons of one of her nieces.

II. A Nyanja friend, A, five or six years ago was allowed by his parents-in-law to take his wife back to his home village. Here, therefore, contrary to matrilocal custom, he lives with his own parents; but the rest of the homestead is matrilocal. When A built his hut here there were four other huts: his parents; those of a younger sister of his mother, (*mai nanang'ono*, "little mother"), and her husband; a girl cousin, this aunt's daughter and so called by him "sister" (*cheneni*), and his only married sister. It is still a small homestead, though another sister has since married and her husband built a hut here, and his young unmarried brothers have built their own "bachelors' hut", (*nyumba*) where they sleep with one of his nephews; it can never be large, since his parents had eight sons, who as they grow up and marry go off to their wives' homes, and only two daughters to bring them sons-

1: Tew E-4 (no date) 1950 FT? Tao FT?

Ikhale (plur. *makhale*), a breast. This includes all who are supposed to be descended 614
from a common ancestress. Often the direct line of descent from the founding 613
ancestress is not known for more than three or four generations. The small groups
which can definitely claim to be 'of one breast' constitute the distinct matrilineal
groups which live together in separate hamlets within a village. Each is undifferentiated [621]
in relation to other matrilineal groups, but internally each is differentiated on the
principle of sibling unity.

The main emphasis of the kinship system is on the bond between a man and his 593
sisters. Their relationship is summed up in the word *mbumbu* (translated by Mitchell
as 'sorority group'). A man speaking of his *mbumbu* refers to all the women he calls 602
sister, their daughters, and their daughters' daughters. Strictly speaking, female kin
in the ascending generations are excluded, as belonging to the *mbumbu* of his mother's
brother. The 'warden' of a sorority group, *anyone mbumbu*, is the senior of the brothers
and is responsible for the behaviour of the women in his charge; he appears for them
in court and pays fines on their account. He plays an important part in the marriage
negotiations. It is his duty to consult the diviner if his sister or her child falls ill, and
so he chief mourner at the funeral of either of them, also providing medicine for the
ritual purification at the end of the mourning period. Formerly these obligations were
balanced by certain rights. He could sell some of them into slavery for his own
personal reasons. This privilege is ended, but even to-day it is through his sorority
group that a man achieves status and independence.

The principle of sibling unity is expressed in many other ways. A man and his 601
sister reciprocally call each other *abambuanga*. More usually, a woman calls her 602
brother, older or younger than herself, *ninawei* (a term of respect usually applied to
a chief), for any brother may be regarded as warden of her sorority group. A man has
the same duties to his younger brothers as to his sisters, so they also call him *ninawei*,
but he calls them *mpwanga* 'younger brother', as they can never be in the position
of warden in relation to him. Maternal uncles are called *abambuanu*, and a sister's
son *ripwa*.

Within each matrilineal descent group, differentiation takes place between members 602
according to whether they are siblings or not. A man's sorority group included ideally 593
his own siblings and their female matrilineal descendants. His sister's daughters are
also the sorority group of his sister's son, their brother, so that any woman can belong
at any one moment to the sorority groups of her brother, her mother's brother, her
mother's mother's brother, &c., but the effective one is that of her own brother, if
adult. He is consulted first in small disputes, and at the marriage ceremony each party
is represented by a brother as well as by a mother's brother. In the break-up of a
hamlet (described below, p. 12), siblings tend to hold together more closely than
cousins and to form groups of their own, so that each woman in the descent line is a
potential point of cleavage. Tension between brothers as they compete for control of [579]
the sorority group is a source of friction within the sibling group which eventually
leads to its disruption.

Since marriage is mainly matrilocal, and extra-village, the husband in his wife's 591
village is seen as a stranger by all the members of her matrilineal descent group.
There is a tendency for members of such descent groups to live together in a cluster 621
of huts. The word 'hamlet' is used by Mitchell to indicate a cluster of huts, in which 614

1: Tew E-4 (no date) 1950 F77 Yao F77

every adult member is a matrilineal descendant of a single ancestress, or a spouse of one of these people. All husbands are called *alawa* by the male members of the descent group, but husbands call each other by the kinship terms for older and younger brother (i.e. *achimwene* or *mpwanga*) according to the seniority of their wives. Similarly undifferentiated in kinship terms are the wives of all men of the descent group, who call each other 'sister'.

The husband is expected to work in his wife's garden, to help his mother-in-law, and also, in the early stages of marriage, to avoid her. His attitude to his father-in-law is one of respect, relaxing as time goes on. His attitude to his wife's brother is also one of respect, which covers feelings of latent hostility. Although husband and wife's brother co-operate in affairs relating to the woman and her children (e.g. they jointly consult the diviner in case of illness, and the brother-in-law hears grievances the husband may have against his wife), there are elements of conflict arising from their competition for the affection of the woman and her children.

Patrilocal marriages are the rule in certain cases. The village headman commonly has his wife in his own village. At his death his widow may return to her own village, but if her daughters have married locally she may stay, and one of her sons, as warden of his sisters, will also stay and marry patrilocally, as did his father, the headman. Thus a new matrilineal descent group, linked to that of the headman by a patrilineal link, develops. In every generation the number of separate but related matrilineal descent groups would double, and at such a rate of proliferation it might be expected that any village would contain many family groups. In fact, however, most members of a village can trace their descent from a common ancestress removed not more than about five generations. There are two reasons for this degree of homogeneity in the kin-grouping in the villages. One is that the villages tend to split up as they become too large and complex. The other is that the introduction of a new matrilineal descent group is often avoided by a cross-cousin marriage by the headman of the village or the warden of a sorority group.

There is a joking-relationship between cross-cousins, that is, for example, between the village headman's children and his sisters' children. The latter, as members of his descent group, have interests and loyalties opposed to those of his own children. Although there is a strong tradition of cross-cousin marriage, such marriages are said to be likely to be unstable.

Betrothal and Marriage

Child betrothal was common among the Yao. Acceptance of a loin-cloth and the wearing of it was taken of betrothal, giving the groom exclusive rights over the girl.[1] The negotiations for an adult marriage are conducted by senior matrilineal kinsmen of the parties, who at the subsequent ceremony act as witnesses or sureties to the marriage. Usually the senior is the mother's brother, and the junior the brother. The act of validation, the *Cingwane* rite, takes place some time after the husband and wife have been living together. They meet in the hut of the woman for the rite, which consists in eating two pots of porridge, prepared by the female relatives of each party. The man's people bring a cockerel and the woman's a hen for relish. The exchange of food symbolizes the exchange of members of each matrilineal kin group, which is

[1] Macdonald, 1882, vol. i, p. 118; Johnston, 1897, pp. 410–13.

2: Mitchell E-5 (1946-1949) 1956 F'77 Yao F'77

NOTE

[25 (c)] Where I have used abbreviations for kinship terms I have followed the Rhodes-Livingstone Institute convention:

M — mother	B — brother	H — husband
F — father	Z — sister	W — wife
D — daughter	S — son	G — sibling

Other symbols are built up on these, so that 'father's sister' is FZ and 'mother's father's sister's son's daughter's husband's brother' is MFZSDHB. Seniority is indicated by a plus or minus, so that 'older brother' is + B and 'younger brother' is — B. I have used the combination XC to stand for 'cross cousin'.

2: Mitchell K-5 (1946-1949) 1956 FT7 Yao FT7

had no hostile ears to grind. Younger brothers and sisters' sons might have used the military forces against him, or they might have squandered the wealth of the corvées because they had a jural right to it. As the sons grew older they were given groups of slaves and slave-wives to look after, and so they became village headmen under the chief. Many of them came to have initiation rights and hold other positions of importance.

The chief was also connected to other lowlier headmen through marriage. It is clear that affinal links become in time cognatic, but the marriage of the chief with a headman's sister fixes the relationship between that headman and the chief in perpetuity. The succeeding chief does not look upon the village headman who is his mother's brother's wife's brother as a father-in-law, as he would if he were a commoner, but instead calls him 'brother-in-law'. Also, all the successors of the village headmen call all the succeeding chiefs by this term, so that the political structure of the area becomes phrased in a kinship idiom: the quasi-kinship of headman and chief in this context becomes suffused with political meaning. The number of village headmen who claim some affinal relationship to the chief is not great—only 10 of the total of 203 (i.e. 4·9 per cent).

TABLE VIII

PROPORTIONS OF RELATIVES AND UNRELATED HEADMEN AMONG THE NEWCOMERS

Chief's Relatives						Non-Relatives	Total
Direct			Clan				
Mat.	Pat.	Aff.	Mat.	Pat.	Aff.		
0 0	13 3·4	13 3·9	84 0·3	13 3·4	16 4·0	300 79·8	381 100%
7·1%			13·9%			79·8%	

Among the Aborigines and Newcomers, naturally, there are very few direct relatives. There are, of course, no matrilineal relatives. The patrilateral relatives amongst the Newcomers (3·4 per cent) are those of Kawinga who have moved into Chamba and Liwonde areas. There have been various map-

619 Relationship may be claimed not only through having the
620 same clan-name, but also by patrilateral and affinal clan ties. For example, one of the early Kawinga is supposed to have married an *ahanda* woman. Therefore Chikwen, whose clan-name is *ahanda*, calls Kawinga 'brother-in-law' (*alamu*). Some of Kawinga's village headmen also call him brother-in-law because of the clan-name. Ngokwe, whose clan-name is *ainchiri*, had an *ainchiri* father, so that many of his *ainchiri* headmen call him 'son'.

619 Here, as before, there are more Invader headmen who claim
622 to be clan relatives of the chief (34·6 per cent) than Newcomer
623 headmen (13·9 per cent) (see Tables VII and VIII). Once again the proportion of headmen who claim affinal links to the chief is approximately the same in the two categories and the main difference is in the proportions who have the same clan-name and who are clan-patrilateral relatives in the way I have explained. I have mentioned that though many headmen have the same clan-names as the chiefs or the clan-names of the chiefs' fathers, they do not all claim to be clan-relatives of the chiefs. There is no reason to suppose that the distribution of clan-members is different between the Invaders and Newcomers, so that it seems likely that more Invaders claim the clan-relationship to the chief when they can, than do Newcomers.

Unrelated Headmen

622 The striking difference between the two main groups of head-
623 men is in the proportion not related to the chief. Among the Invaders only 35·1 per cent of the headmen cannot claim some kinship link to the chief. Among the Newcomers, however, roughly double that proportion (78·8 per cent) are in this position. Among the Invaders some of the unrelated headmen hold positions of importance by virtue of their independence of the chief. These are the *ndunu* whose functions I describe later.[1] Among the Newcomers, however, there are no *ndunu*, so that this difference between the categories is one of the most important.

In Tables VII and VIII I have omitted a total of 105 villages, 93 of which were small villages whose relationship to the chief I did not record. All these villages were settled in distant and inaccessible places and I asked about them from the chiefs and

[1] Chap. IV, pp. 92-3.

2: Mitchell E-5 (1946-1949) 1956 FT7 Yao FT7

The chief as an important village headman
[601] is usually addressed by a kinship term, either *baba* (father) or
643 *ambuje* (master or grandparent). When he is referred to, his
622 name is not used. Village headmen are owners or wardens of
559 villages (*anyaw mini*) but only those headmen of some standing
578 are referred to as *mawuye*.

Important village headmen, like the chief, are in mystical
643 danger from pollution by death. They cannot come to the hut in
622 which a corpse is lying; and they cannot eat the chicken which
559 has been brought to them by relatives of the deceased to announce
761 the death. Like the chief too, an important headman may be buried in a tomb in his village and not in the graveyard.

But an important element in their relationship nowadays is
643 that the Administration will support the chief against a village
622 headman when it comes to a trial of strength, and that a headman
559 these days is precluded by modern conditions from setting up
578 chiefdoms as he did in the old days. Village headmen therefore
691 must struggle for power against their fellows and the chief within the modern Administrative framework. Some attempts are made to resist the power of the chief but these are rarely successful. The dispute between Liwonde and Ndenda illustrates this.

Ndenda was an Ngoni headman, who in 1947 had 284 tax-payers under him (*Liwonde*, the chief, had 186 in his village). Ndenda had come into Liwonde's area before the White invasion and had surrendered with his relative Mlelemba, to Liwonde. The second Liwonde had given him both initiation rights but, unlike his relative, he did not have the right to wear a scarlet headband.

In 1938 or thereabouts, Liwonde decided to move his village site from the Shire River to its present site about half-way up the Great Rift scarp. He sent two of his young men to look for a suitable site, and to plant some mango trees there when they had found one. Ndenda heard of this and sent one of his men to take Liwonde's men into custody. He took their hoes away and then told them to go back to tell the chief they were planting in his (Ndenda's) land. In due course Liwonde moved up to his new site, and asked Ndenda why he had taken the hoes away and whether he owned the country, i.e. was the chief. Ndenda now argued that Mlelemba's ancestors had been given the rights of chieftainship over this area and that the first Mlelemba in the area had given Liwonde some elephant tusks for these rights. Liwonde replied that the chief has a right to tusks and that many had given tusks to him but were not entitled for that reason to rights of chieftainship. Liwonde handled this situation by calling a meeting of the village headmen in the area. They assembled

2: Mitchell E-5 (1946-1949) 1956 F77 Yao F77

came to the village and in accommodating strangers while he was away. He told them that disputes were to be referred to the headman immediately. Turning to the new headman he said he had to report anything unusual that occurred in the village, and that he was authorized to arbitrate in small cases in his and surrounding villages. 622 537

Kawinga then left the centre of the crowd and went back to where he had been sitting. Then an officiating headman, addressing particularly the women, said, 'Only a few months ago there was a quarrel between the present chief and his elder sisters. These women ran away to Malemia's area in Zomba district without reporting the matter to anyone. This must stop. With effect from to-day any troubles must be brought to the headman without delay: he will settle them. A tree cannot grow without branches and a headman or a chief cannot be known without his people's respect. Do not behave as children. This man cannot do things alone: he must have your help. We leave him in your hands and we do not want to hear about any more trouble. Follow all the instructions the chief has given you.' He took his leave and Nyenje was taken back inside the hut. The people now dispersed to where there was beer and dancing.

The Structural Reincarnation of Village Headmen and Perpetual Relationships

There appear to be a number of significant aspects of the installation ceremonies. First, there is the ritual death and rebirth of the village headman. The heir is 'killed' by a blow with the fist on the forehead, but is reborn the headman. The Yao do not believe that the spirit of the headman is inherited by the heir;[1] he has only eaten the name.[2] But socially he is born again and, logically consistent with this idea, he takes the wives of his predecessor without further marriage negotiation. He also takes over the property of the dead man, his clothes and his huts. 622 829 587 429

But this structural reincarnation of the headman has the important implication that the headman *is* immortal. He shares this characteristic with the group of which he is the leader. When 622 829 601

[1] As the Bemba do. A. I. Richards, 'Mother-right among the Central Bantu' in E. E. Evans-Pritchard and others, *Essays Presented to C. G. Seligman*, Kegan Paul (London, 1933).

[2] *Kalya lina* is a synonym for succeeding to headmanship.

2: Mitchell E-5 (1946-1949) 1956 FT7 Yao FT7

622.
927
601

a village dies, so then does the headman die.[1] In his rebirth, he occupies the status that his predecessor held before he died, in both the kinship system and the political structure.[2] His mother's brother's children whom he formerly called 'cross-cousin' he now calls 'my children'. His mother's younger brothers whom he previously called *akwehowe* (mother's brothers), he now calls 'my younger brothers' (*apwanga*), and so on. By the extension of this principle, an heir succeeds not only to the status of his mother's brother but also to that of the first of his name. Cigwaja VI, for example, calls the descendants of his mother's mother's mother's brother (Cigwaja IV) 'children'. In fact, he calls the children of any Cigwaja 'my children'.

Within the political field the same principle is used in establishing what we may call 'perpetual relationships'.[3] There are some village headmen who express their relationships to each other or to the chief by a kinship term. The headman Majoja, for example, is the 'son' of Nyambi. In fact, the first Majoja to establish a village was the son of the second Nyambi. The present Majoja is the third incumbent and three Nyambis have died since Nyambi II. Nevertheless, by positional succession both of the present incumbents are translated to the formative phase in their relationships, which is thus perpetuated to-day, and will be, in their view, for ever. The present Liwonde calls Kawinga 'elder brother'. Kawinga is in fact his mother's mother's mother's sister's son. The first Liwonde was the first Kawinga's younger brother. They invaded Nyasaland together. At this significant point in their history their relationship became fixed and then perpetuated in the political structure. This relationship, though phrased in a kinship term and moulded to some extent by the norms of kinship behaviour appropriate to the term used, is in reality political, for it fixes the relative positions of two villages through their headmen.

[1] Sometimes after a village has broken up and the name has not been heard of for some years, some survivor revives it and reassembles the village.

[2] Dr. Richards calls this 'positional succession'. See 'Some Types of Family Structure amongst the Central Bantu' in A. R. Radcliffe-Brown and Daryll Forde (eds.), *African Systems of Kinship and Marriage*, Oxford University Press for the International African Institute (London, 1950), 224.

[3] This term was suggested by Dr. I. Cunnison's use of it for a similar practice among the peoples of the Luapula Valley. See his *Local Organization on the Luapula Valley*.

2: Mitchell E-5 (1946-1949) 1956 F77 Yao F77

621 links are usually forgotten, so that the two villages are known to
613 be related, but it is not certain how. The matrilineages to which the two headmen belong recognize this forgotten link and they refer to this relationship as *ulenge ilakombana*, which I can only translate as 'distant relationship'. In Cikoja village, for example, the headman's matrilineage, or as I shall call it, dominant matrilineage, is related to at least two other villages. These are Mlunde and Cibwana Kwenga, both in Jalasi's area. The links with these two groups cannot be remembered. The first Mlunde and the first Cikoja, I am told, had the same mother. Neither the present Cikoja nor any of his villagers could remember the genealogy earlier than the fourth Cikoja. A section of Mlunde village, nevertheless, lives in Chiwalo's area near Cikoja and there is a fair amount of co-operation between the two villages to-day. Cibwana Kwenga is by the same explanation a 'mother's brother' of the present Cikoja; he is called in whenever there are serious disputes in Cikoja's village, and brings the force of a senior relative to bear on Cikoja.

621 People who are thus vaguely and distantly related may express
613 their kinship in many ways. For example, they say that they are
601 'the people of one founding ancestor or ancestress'. They may say that they are *aciwa Mamemba*, 'the people of Mamemba', or *aciwa Nkopa*, 'the people of Nkopa'. Mamemba and Nkopa here may be either a woman from whom they are descended, or a man who was the leader of the group when they first moved into the area. Where a man is mentioned as the founder the term is used for the descendants of the man's sisters. But like most terms for social groups its meaning changes in different contexts. In another context, for example, *aciwa Cikoja* means simply the people of Cikoja village and has no reference to matrilineal descent at all.

Other terms are more specific. The word *mpapo* may be used in the sense of one type or kind, as *pampapo pamo*. An arbitrator at an intra-lineage dispute said, for example, 'You people who have a case are people of one kind [*dwanda pampapo*]'. The word *cipapo* may be used in much the same way. But even here the reference may be to the entire span of matrilineal relatives whose relationship is vague and uncertain (*ilakombana*); or it may refer to a section of relatives having one known ancestress; or it may even refer to a segment within the section.

2: Mitchell E-5 (1946-1949) 1956 FT7 Yao FT7

making the libation, pours the beer or sprinkles the flour at the root (*lyaw*) of a *dwise*-tree. As would be consistent with this way of looking at the lineage, genealogically-distant ancestors are said to be 'below' (*pan*), so that if a Yao wishes to say that a certain person was a matrilineal ancestor many generations back, he would say that he was 'very much below'.

The Concept of 'The Mother'

The matrilineal descendants of the founder look upon themselves as having been fed from the same breast and may express this by saying 'we are of one breast'.[1] Deep sentiment is attached to the idea of the mother among the Yao. There is, for example, a sharp distinction drawn between those women who have had children and those who have not. When a woman becomes pregnant for the first time, she is given instruction in child welfare when she undergoes a special ceremony (*Itiwo*). This is a ceremony which is publicly announced and attended by most of her matrilineal and other kinswomen and acquaintances. No woman may attend this ceremony if she has not herself had a baby. Thus her change in status in the community is clearly shown by the public recognition of her condition, and the fact that she is initiated into secrets which are shared by other mothers only. Her position in the lineage is much enhanced when she becomes a mother. It is the most important step towards becoming a village founder herself.

The concept of 'the mother', in general, also appears in the boys' initiation ceremonies. Certain phases of ceremonies may be conducted only with the help of the women. They have to clap the rhythm to which the 'tailmen'[2] do their dances. Here all women are classified as 'mothers' and without their co-operation the ceremonies could not be conducted. During the same ceremonies these women appear with baskets of food on their heads. The tailmen remove the baskets and sacralize the

[1] *Tuli pelele pamo.* The word *mlango*, a doorway, is also commonly used. The idea in essence is exactly the same. It is the concept of the children who come to settle around a woman's hut door. It is used as *Gunda pamlango pao*, the people of his lineage section.

[2] The *m'ndwiro*. These are the functionaries in the initiation ceremonies. They carry medicated zebra tails during these ceremonies, and this gives them their names. See especially Stannus, 'The Wayao of Nyasaland', 229 ff.

2: Mitchell E-5 (1946-1949) 1956 FT7 Yao FT7

contents. Here once again the women, though they may have no boys in the initiation ceremony, are called 'the mothers'. The ritual co-operation of the mothers in the initiation ceremonies is paralleled by that of mothers and sons in political affairs: here sons are in charge of the villages, while their mothers and sisters form the nucleus of the localized kinship group, which in turn is the core of the village.

The ritual importance of the mother is nowhere more clearly seen than in the curse. The Yao believe that a mother may curse her child if he or she is disobedient or otherwise beyond control. Not many mothers do curse their children; the threat to curse seems to be more often used. Informants have told me of some mothers who have cursed their children, and the procedure and the wording of the curse have always been very similar. It is usually not applied to young children who could be punished by other means, but to adults and particularly adolescents. Usually the mother lifts her breast and points the nipple upwards saying, 'If you have never sucked from this breast nothing dreadful will happen to you.' The consequences of this are greatly feared. Where I have been told of curses, each time the child has either died suddenly shortly after the curse, or at least it has gone mad. The curse is vaguely supposed to operate through the ancestor spirits, but I could get no clear statement on how this happens.[1] Whatever the cause, however, the symbolic action of lifting the breast and the dire effects which are supposed to follow from this, indicate the importance of the mother in the lineage.

The Yao attach this sentiment, in general, not only to the mother, but also to all senior matrilineal female relatives. In general speech all female members of the matrilineage in ascending generations are 'mothers', and all members in the descending generations are 'children'. This fundamental relation of mother and child extends throughout the lineage. The Yao term *acinangolo*, used for the senior female members of the matrilineage, embodies this idea of 'the mothers'. More specifically, as far as men are concerned, the matrilineage is classified into

[1] Further evidence that the ancestor spirits are involved in the curse may be that madness is called *mazoka*—spirits—and that it may be said of a madman that the spirits are beating him (*gakumpata mazoka*). A curse may be revoked by blowing water out of the mouth, an act which is also vaguely connected with the ancestor spirits.

2: Mitchell E-5 (1946-1949) 1956 FT7 Yao FT7

'sisters' and 'mothers' because alternate generations are merged in kinship terminology and in behaviour. A man's sister's daughter, for example, is called 'mother', and her daughter (his granddaughter) in turn becomes 'sister'. A woman calls her male matrilineal descendants 'children' (*wawanga*), or 'grandchildren' (*yitibede*); her matrilineal male progenitors 'mother's brother' (*akwelume*), or 'brother' (*alambwanga*).[1] By extension, therefore, another way of expressing common matrilineal descent is to say that two people are the children of one person, *alanakajuma*, even though that person may be their great-grandmother. A term which is almost synonymous with this is *mwitumbu cima*, 'in one womb', used as 'we were conceived in one womb', though once again the reference may be to a common grandmother. But the inclusiveness of these terms varies in different contexts. Any may refer to the matrilineage of maximal span within the village, or to a section of the matrilineage seen as a segmented organization of parts. It is only by reference to the particular sociotexts that the range of the term may be determined.

The Unity of the Matrilineage

613 A person identifies himself most closely with the members of his matrilineage from whom he expects most help and whom he, in turn, is expected to help. If he is called upon to pay a heavy fine it will be the members of his own matrilineage who will club together to find sufficient money. They, more than others, [753] support him in his quarrels. They come to his aid when he is ill or injured, by consulting the diviner and trying to find the sorcerer who is causing his illness, and by finding medicines which will bring him back to good health. They send him money if he has left the country and needs it to return. The goods he brings home from the labour centres will be shared mostly among his matrilineal relatives. [764] They will find the food to be used at his funeral and also see that his burial is properly carried out. [828] He owes these duties in turn to them. His property will stay almost entirely within the matrilineage after his death.

613 Relationship, unless qualified, is looked upon as being entirely 753 matrilineal. This is well illustrated by the beliefs about the

[1] She more commonly addresses them as *ainawani*. See p. 147.

2: Mitchell E-5 (1946-1949) 1956 FT7 Yao FT7

The class [illegible] of brothers and sisters is also reflected in the kinship terminology. The common term used by both men and women to address sisters is *ewowli* and it is also applied to all women out of respect. But the term which is used descriptively and sometimes in address, cross-sexually, is *ekuhwanga* (my sibling-of-opposite sex). It is self-reciprocal and thereby expresses the special relationship between the man and his sisters. Two sisters address each other in everyday conversation as *ewowli*. When it is necessary to be more specific an elder addresses the younger as *ekuhwanga*. These are also descriptive terms. A man addresses his younger brothers as *epwanga* while they address him as *ewowwi*. Women also address their elder or younger brothers as *ewowwi*. This word is widely used as an honorific title but it is especially used for people who are in authority. The chief, for example, may be referred to as the *ewowwi*, and men frequently call their mother's brothers and other senior matrilineal male relatives by this term. An elder brother has the same duties towards his younger brothers as to his sisters, so that use of the term of address *ewowwi* here indicates his position of authority over them.

From the point of view of a warden, his sorority-group is essentially made up of his sisters. We have seen that he is responsible for his younger brothers in exactly the same way as he is for his sisters, though technically they are not his sorority-group. He also has control over his sister's children so that ideally a warden sees his sorority-group as his sisters and their daughters and their daughter's daughters and so on. But a man's sister's daughters will probably have as their warden their own brother who stands in the same relationship to them as their mother's brother stands to their mother. The matrilineage is therefore organized internally in a system of inclusive sorority-groups extending from the eldest surviving member down to the youngest. However, a component sorority-group of a matrilineage does not begin to appear as a corporate group until the man who is to be its leader is old enough to take charge of the affairs of the women under him. Naturally, the age at which this happens is largely a matter of circumstance. Theoretically a man may not take charge until he has been initiated. But Yao boys nowadays are usually initiated at about 8 to 10 years of age. Obviously a child of this age cannot take over the affairs of his adult sisters, so that his mother's brother looks after

2: Mitchell E-5 (1946-1949) 1956 FT? Yao FT?

against Cikoja himself. It is important that not once is a member of the junior major segment, that is a descendant of Ciñeka (A1), involved in the dispute. Only the descendants of Anáiya (D1) and Amaliema (D2) are involved, with the exception of Salima who appears as the representative of the villagers on the old village site.

The Opposition of the Generations

Segmentation arises as more and more security-groups, the daughters of women, reach adulthood, and as the sons of the same women become old enough to undertake responsibilities for the care of the women. There is, in this situation, a fundamental opposition of generations. A woman is bound to her own sisters and at the same time she is bound to her daughters. These bonds come into conflict when her daughters want to express their unity against their mother's sister's daughters. The mother must decide whether she will go with her daughters to their new village site, or whether she will stay with her sisters and possibly with her own brother. I found consistently that a mother seldom stayed in a village when her daughters were moving out of it. The bond with her children is stronger than that with her sisters. Yet the conflict is clearly present. It finds expression in the kinship terminology. A daughter is usually identified with her mother's mother. A woman's daughter's daughter inherits her name, her position and her property in much the same way as a man succeeds his mother's brother.[1] When this has taken place the terms of address of her parental generation are now reversed. In other words her mother's brother instead of calling her, 'sister's child' (*ipwe*), calls her 'mother' (*amao*). Sometimes the qualificative *wamaeje* ('who has returned') is used to signify the difference. Her mother's mother's husband even before the succession has taken place calls her 'my wife', and I have recorded one or two marriages between a man and his wife's daughter's daughter. A man's daughter's daughter must also perform some of the funeral rites for her grandfather after his wife has died.[2]

We have among the Yao, therefore, the familiar principle of

[1] See Chap. V, p. 121.

[2] She cooks the ritual meal which he eats at the end of mourning to protect himself against *ndaka*. Here she ritually fills her mother's mother's place.

2: Mitchell E-5 (1946-1949) 1956 FT7 Yao FT7

when I visited it in 1947.[1] The basic structure of this village is set out in Diagram 5. Here the headman[2] was the last surviving member of the dominant matrilineage. The founder of the village, his mother's brother, had thirteen dead concubines. Some of these were barren but others produced children to give this complex structure. In this village the 55 huts were arranged in 16 different affiliations. The details are set out in Table XXIX. These groups were held together by Mpumbe IV, old, blind and doddering as he was. The virtual leader of the village was his elder brother's son, a man in his late forties or early fifties. When Mpumbe died, late in 1948, the people said that it was because of the sorcery of his brother's son who wished to take over the name of the village. This led to a dispute, which ended in the brother's son's leaving to found a new village about 15 miles away. A distant sister's son, as I have said, succeeded to the headmanship, and the reduced village was reunited under this new leader.

However, this is an extremely unusual type of village as most villages, if they are not simple matrilineal groups, have only one patrilateral-linked group living with them. The reasons for this are firstly, that if patrilateral-linked matrilineages develop at all in the modern villages, they move out very soon after the death of their progenitor, and, secondly, that there are very few of the old slave-raiders' villages left intact.

Cross-cousin and Other Kinds of Intra-village Marriages

A most important factor in the welding of patrilateral-linked groups to the dominant matrilineage is marriage. The tradition of cross-cousin marriage is very strong among the Yao. A person may marry either type of cross-cousin but in practice preference is given to a father's sister's daughter—i.e. the woman is married to her mother's brother's son. There is a special term for cross-cousins, *anibwi*, which is used by either male or female talking to either sex. Between cross-cousins, especially cross-sexually, there is a joking-relationship which may vary all the way from ribald joking to sexual advances. Some of my male informants say that sexual intercourse may take place between cross-cousins

[1] See also Chap. VI, p. 161, and Chap. III, p. 59.

[2] He died late in 1948 and was succeeded by a distant 'sister's son' from the village of his perpetual son, Ngongondo.

[text continues on p. 199]

2: Mitchell E-5 (1946-1949) 1956 FT7 Yao FT7

'*if the women are stupid enough to allow it*'. The kinship terminology is consistent with the assumption that every man marries his cross-cousin, except that the father's sister's husband is not called '*father-in-law*', but '*father*'. The mother's brother's wife is called *ahwyow* (parent-in-law). The husband of a cross-cousin is called *nywu* (younger brother), on the reasoning that if a man does not marry his cross-cousin, then his younger brother will. Dr. Meredith Sanderson told me that it was once the custom for a man to ask a prospective wife's cross-cousin before he proposed marriage because it was assumed that the woman's cross-cousin had first right to her hand. As far as I could ascertain this politeness is no longer observed.

The children of cross-cousins are called '*my children*'. In addition to this a person calls his mother's mother's brother's son or mother's father's sister's son, '*father*', and his mother's mother's brother's daughter or mother's father's sister's daughter, '*female father*', a term which he applies also to his father's sister.

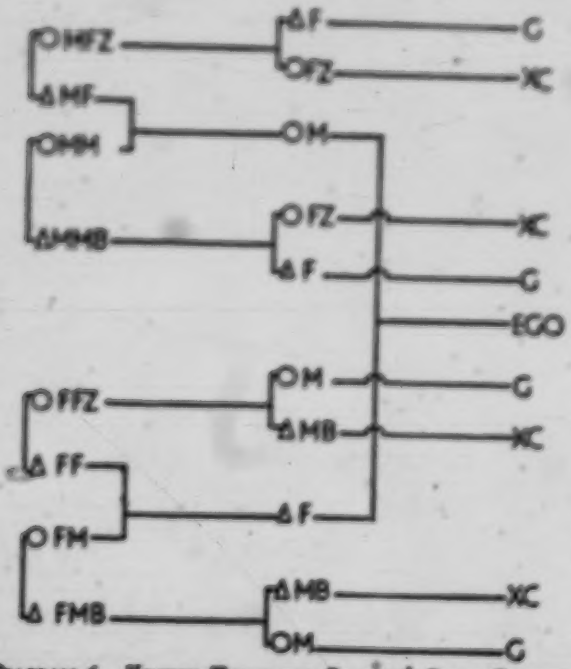

DIAGRAM 6. KINSHIP TERMS FOR PARENTS' CROSS-COUSINS.

2: Mitchell E-5 (1946-1949) 1956 FT7 Yao FT7

601 A person calls his father's mother's brother's daughter and father's
605 father's sister's daughter, 'mother'; his father's mother's brother's son or his father's father's sister's son, 'mother's brother'. Diagram 6 illustrates this. This is consistent with the assumption that each parent has married his cross-cousin.

562 Conversation with informants gives the impression that cross-cousin marriages are very common. They say, for example, that every man's first marriage ought to be to his cross-cousin. But in fact, of 103 first marriages, only 15 per cent were to real or classificatory cross-cousins, though 21 per cent were to other types of kinsmen. Marriages to other types of kinsmen are loosely called cross-cousin marriages, and often what has been called a cross-cousin marriage in conversation turns out to be marriage to a cross-cousin's daughter or something similar. This may be the reason why casual conversation leads one to imagine that cross-cousin marriage is so frequent.

601 But cross-cousinship is particularly significant when seen in
605 relation to village structure. Typically, villages, if they are not
613 built around a simple matrilineage, are composed of a dominant matrilineage and one or more lineages linked patrilaterally to it. Sometimes there are groups in a village which are connected by a patrilateral link to a matrilineage which is in turn linked patrilaterally to the dominant lineage. In other words, there are some lineages connected by a double patrilateral link to the dominant lineage. But this is not common. These linked groups have arisen because one or more of the men of the dominant lineage have brought their wives to live in their village. The set of kinship terms applied to members of the linked lineage by members of the dominant lineage are shown in Diagram 7. We have already seen that Ego, whether man or woman, calls his or her mother's mother's brother's son or daughter 'father' or 'female father'. This usage is consistent with the assumption that one's mother ought to have married her mother's brother's son so that the mother's maternal uncle's son should be called 'father'. On the same reasoning, one's mother's mother's brother's daughter should be one's father's sister and the appropriate term 'female father' is accordingly applied. Because uxorilocal marriage is the custom, Ego's mother's mother's brother's son marries out of the village and his children belong to another lineage. The children of Ego's mother's mother's

2: Mitchell E-5 (1946-1949) 1956 FT7 Yao FT7

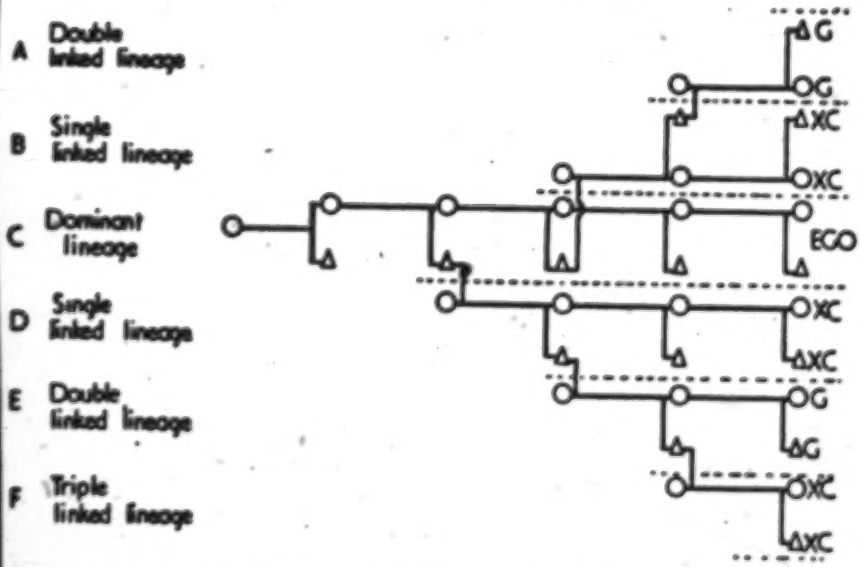

DIAGRAM 7. KINSHIP TERMS BETWEEN DOMINANT LINEAGE AND PATRILATERALLY-LINKED GROUPS.

brother's daughter, however, are members of the linked lineage and they are called 'cross-cousin' by Ego and members of the dominant lineage in Ego's generation. The children of 'cross-cousins' are called 'my children'. Hence, Ego and those in his generation in the dominant lineage call all those in the first descending generation in the linked lineage 'my children'.

I have used as an example a lineage which is linked to Ego's lineage through his mother's mother's brother. But the kinship terminology is unaltered if the link occurs in any ascending generation. In Diagram 7 I have set out the kinship terms applied by the dominant lineage to members in the linked lineage where the connection is through Ego's mother's mother's mother's brother.

The argument would run as follows:

	Ego's MM	calls Ego's MMMBD cross-cousin.
Therefore	Ego's M	calls Ego's MMMBD female father;
therefore	Ego's M	calls Ego's MMMBDD cross-cousin;
therefore	Ego	calls Ego's MMMBDD female father;
therefore	Ego	calls Ego's MMMBDDD cross-cousin.

601 To Ego therefore, in a lineage linked through one patrilateral link:

685 Any person in the first ascending generation is 'father' or
613 'female father'.
Any person in the same generation is 'cross-cousin'.
Any person in the first descending generation is 'child'.

Those in the second ascending generation are called 'grandparent' and those in the second descending generation are called 'grandchildren'. By the merging of alternate generations, those in the second ascending and second descending generation may also be called 'cross-cousin'.

Where the subsidiary lineage is connected to the dominant lineage through two patrilateral links the kinship terms for siblings is applied to Ego's generation. In Diagram 7 the linked lineage marked A is connected to the dominant lineage through Ego's MMBS. Ego calls his mother's mother's brother's son 'father' and, therefore, calls his mother's mother's brother's sons' children by the appropriate sibling terms.

If a subsidiary lineage were connected through three patrilateral links the kinship nomenclature would be the same as if there were only one link. Lineages connected to dominant lineages through two or more patrilateral links are very rare. Most subsidiary lineages are connected through one patrilateral link only. In any village the generation differences between members of dominant and subsidiary lineages tend to be obscured. The Yao tend to see the component lineages as wholes, and therefore speak of the relationships between members of the dominant lineage and members of the subsidiary lineages in general as 'cross-cousinship' (*cisuwani*). It is only in special situations that the exact relationship becomes important.

605 The pattern of behaviour between cross-cousins is consistent
578 with this view of their rôles in the make-up of a village. In the
621 typical Yao village there are two or three groups who are united in their extra-village affairs but opposed in internal relationships. Their hostility to each other comes to the surface at the slightest provocation, but they are, nevertheless, co-villagers. They are kin and yet not kin, because the Yao look upon kinship as primarily matrilineal. They talk of the link through the father as 'not proper kinship'. The hostility between the members of the different cross-cousin groups in the village is dissipated

3: Stannus D-5 (ca. 1912) 1922 FT7 Yao FT7

There has never been any shortage of land and therefore the plotting out of gardens was a matter which caused little trouble. A man wishing to make a new garden the next season simply marked the site in the bush by scoring some trees or hoeing around some patches of grass and tying the grass ends into a knot. If anyone else came along and hoed this plot, the man who had marked it out still claimed it and need not pay for the hoeing done. Whenever a man was doubtful about a piece of land, he would ask advice of the headman of the village. 423

When an abandoned garden had become overgrown, anyone wishing to take it up applied to the headman who sent him to ask the original owners whether they wished to take it up again. The newcomer could take possession only with their permission. 361

Often if a village were moved, during the first season the people simply put up shelters in their gardens. Later, the site of the village was chosen and around it a medicine man sprinkled medicine to insure happiness and prosperity. The tree from which this medicine was made became sacred to the village and might not be used for firewood, or was subject to any other taboo the medicine man might care to make. He might also say, "In this village there shall be no pounding of grain at night," etc. 423 [789] [778]

If a village were to be built near a spot previously inhabited, medicine and offerings were made to the departed spirits of the former occupants to put them at rest and "open" the place to the newcomers. The beer-pot from the grave of some former chief or headman, who was supposed to have directed the destinies of the old village, was brought to the new location and beer placed in it to insure his continued guidance. [769]

In the case of a village into which a number of men had married, the sponsors of the wives went to the sponsors of the husbands and asked permission to move the village.[1] Later, beer was brewed in the new village and the sponsors invited to come and drink and "put foot in the new village." [203]

Relationship. Family relationship among natives presents certain difficulties to the European accustomed to equivalent relationship of males and females on both sides of the family. In the diagram below (Fig. 1) the relationship of the two children (C 5) will be traced. The mother and father (B 10 and 9) are the *ashibale* and *wese* but are addressed as *amao* and *atati*. The maternal uncles older and younger than the mother (B 11 and 15) are called *abambwe* and their wives (B 12 and 16) *abaupa*. The maternal aunts are addressed as *amao*, mother, anyone older than the mother being distinguished as *amao wakubaupa*, "the bigger" (B 13), a younger aunt as *amao wamandi*, "the lesser" (B 17); their respective husbands are addressed *atati*, *atati wakubaupa* (B 14), and *atati wamandi* (B 18). On the father's side the uncles are called *atati wakubaupa* (B 1) and *atati wamandi* (B 5), respectively, for those older and younger than the father, and their wives *amao wakubaupa* (B 2) and *amao wamandi* (B 6). The paternal aunts are called *atati wakubaupa* (female uncles) (B 3 and 7), their husbands (B 4 and 8) *atati*. 593 601

[1] Vide supra, p. 238.

593 601 The children of maternal uncles (C 6 and 8) and of paternal aunts (C 2 and 4) are called *ocuzu ochoinumi* (sing. *mainumi*), and, conversely, the children of maternal aunts (C 7 and 9) and of paternal uncles (C 1 and 3) are called "brothers and sisters"; one would address the other as "*chomunli*" or "*ochinumi*," but either is *ochuzu* to the other.

601 It is interesting, therefore, to note that cousinship is of two kinds: the relationship 605 between a child and his maternal aunts' children or his paternal uncles' children is *ocuzu*, whereas the relationship with his maternal uncles' children or his paternal aunts' children is *ocinumi*.

[611] It is easily understood why the maternal aunts' children are considered as brothers and sisters, as among the Yao, matrilineal descent is the rule, the children taking the clan of

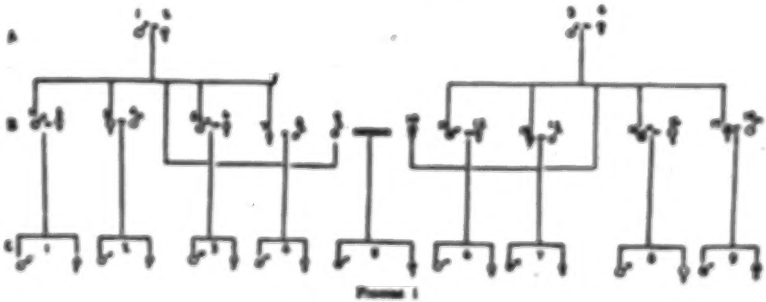

FIGURE 1

the mother. In the diagram, this is indicated in black. That the paternal uncles' children bear the same relationship would seem to indicate that matrilineal descent is not absolute but that dual descent from both parents is recognized.

Children C 5 may not marry C 7 and 9, nor C 1 and 3. In the case of the former, this is because persons of the same clan may not marry, but in the case of the latter, no such reason is given but they are simply said to be brothers and sisters. Children C 5 may [581] marry their cousins C 6 and 8 and C 2 and 4, but this is not very common as it is said such marriages are always unhappy.

601 604 The wife of a maternal uncle (B 12) speaks of her nephew by marriage (C 5) as *mamu*, husband, because, in the event of her husband's death, this nephew would inherit from him and he might marry the widow.

601 A parent-in-law or child-in-law is called *mkwapwa* indifferently. Paternal and maternal grand-parents, and great-uncles and aunts are all called *ambuje*; a grand-child, *chindulu*.

The words *atati* and *amao* commonly mean father and mother, but, as given above, there are other words for these two parents, whereas *atati* and *amao* are applied to certain aunts

3: Stannus D-5 (ca. 1912) 1922 FT7 Yao FT7

and uncles as well. I am inclined to believe that the words primarily refer to a person's maternal and paternal relatives whose children bear the relationship of *wasake* to the person. A strange point, however, crops up, namely, that the paternal aunts are called *atati* (*atati wakungue*) and their husbands *atati* again. 601

An elder brother is *akulu*, his younger brother *mpunkus*, a sister *mlumbu*, *mlumbu wanandi* and *mlumbu wakulungue*, younger and elder sister.

Disease. Apart from old age, the native recognises in all illness and death the hand of an enemy or the result of transgression of some custom: some one has made medicine against him, or he or some one else has broken a custom founded on superstition which is visited on his head. These ideas are so deeply rooted in the native mind that it is with difficulty any appropriate treatment will be received. They rely, rather, on some medicine-man to cure them by medicine more powerful than that made against them. Even an ordinary accident or an attack of pneumonia is accounted for in this way. 753 754 164

The names given in speaking of sicknesses are, of course, applied rather to symptoms, but in some cases where the symptom named is pathognomic of a disease, the word practically stands for the disease. The word used may imply the supposed cause or refer to a resemblance to some object, or again simply state the part affected; thus *chitumbe* (the belly) meaning stomach ache, *meso* (eyes), conjunctivitis, etc.

The following words most of which are found in the Reverend Dr. Hetherwick's *Yao Language*, give some idea of the Yao native's conception of disease. The sense which the above authority gives is not always quite the same as I would venture to give. I shall not enter into the question of the diseases as such but only in so far as they bear on customs, etc.

The word *chiluwale* signifies any disease or illness; *chilepe* and *chipindupindu* refer to epidemic diseases; the former refers to a disease of fowls and dogs characterised by wheezing and hence is occasionally used for bronchitis in man. *Chipindupindu* refers to a series of deaths from a cause unknown to the natives. The word *chaola*, which Hetherwick gives as meaning a plague, rather means arrow poison, I think. 164 753 192

Chombolo: a liver disease of fowls.

Chipapo: a congenital deformity of any kind (*kupapua* = to be born with).

Chituwsima: a patch of white hair on the scalp of congenital origin.

Chisiwani (a cousin): the word used for a birth-mark or freckle; helical fistula is also included. Children examine each other to see how many "cousins" each has; anyone with none is made fun of.

Chinduwdumdi (*kwdumula* = a big lump): a hunchback.

Chiwulula (*ku-wulula* = to split): a "splitting" headache, or more commonly, medicine by means of which the possessor can inflict pain or death.

Ching'alang'ala: a localised pain in the head.

Chiyungusyungu: giddiness.

ship. The difficulties of his position are brought home to the neophyte village headman in speeches made by old and experienced men. On one such occasion I heard a man say, 'Some men who marry into a village are bad and can split a village like this one by telling lies to the headman, saying that his sisters are talking behind his back and are insulting him. When a headman hears all this he might break his village by ill-treating his relatives, thus causing himself to be left all alone.' In this way the headman's responsibility for maintaining harmonious relations between the members of the village and himself is emphasized. His failure to do so results in what they call a break in the village—the departure of some of the members to live elsewhere—which is a severe blow to the status of the headman. In fact, he is dependent on his dependants for status, and the Yao are quick to point this out to neophyte headmen, saying, 'A tree cannot grow without branches.'

We can better understand the situation if we consider the social structure of the Yao village a little more closely. The Yao are a matrilineal people and are dominantly matrilocal. They live in small groups of huts scattered fairly evenly over the country and from a few hundred yards to possibly a mile or so apart. Such clusters may contain as few as five or as many as sixty or more huts, occupied by between 20 and 200 people.

These people are almost always kinsfolk, and in the smaller villages they are usually all either matrilineal descendants of a common ancestress or their spouses. In the larger groups there is a more complex situation which I shall analyse below. In the simpler groups there may be no male matrilineal descendant in the village and the leadership of the group is taken over by a senior female descendant of the founder of the village. Usually, however, if the group is large, one of the male matrilineal descendants lives patrilocally in the village and assumes leadership.

The relationship between a male matrilineal descendant and the female matrilineal descendants who are in his charge is signified by the word '*mbumba*'. The word particularly refers to the relationship between a man and his sisters and I have therefore translated it as 'sorority-group'. It includes a man's full sisters, matrilineal female collaterals (whom he calls sisters), their female children, and the female children of those female children, and so on. It is usually used in the sense of 'somebody's sorority-group'. A man belonging to the descent-group of the sorority-group may refer to these women as 'our sorority-group'. The man who is in charge of the sorority-group is referred to as the *ayeni mbumba*. This could be translated as 'owner of the sorority-group' but because of the property associations with the word 'owner' in our language, I have instead translated this as 'warden of the sorority-group' which expresses more accurately the relationship between a man and his female relatives. Even in those groups where there is a female in charge of the village and no male matrilineal descendant is resident in the group, there is usually some one man, possibly married in some other village, who is warden of the sorority-group. The warden of a sorority-group has certain precise duties to perform on behalf of his charges. First, he is concerned with the good relations between members of the sorority-group and with other such groups. He has to settle most of the domestic quarrels that take place between members of the sorority-groups. Second, and this is considered to be a most important function, he is the person who is the

643 mon ancestress. The first Kawinga and the first
551 Liwonde were maternal brothers and to this day
175 Kawinga and Liwonde call each other "brother".
[601] Nyambi however was a sister's son of an early leader Mkumba who was the father of Nkata, and their clan-name was *amilasi*. Nkata therefore called Nyambi "father".[3] Nkata was the first to move into Nyasaland and Mkumba and Nyambi followed afterwards. Later the Nkata name was dropped and an Arabic name Zarafi, corrupted to Jalasi, was substituted. Hence the present Jalasi calls the present Nyambi "father". Kawinga and Liwonde both call Nyambi *alamu*, or brother-in-law, it is said because one of the early Nyambi's married a woman who bore the clan-name of *ambewe*.

643 The groups under Kawinga and Nkata entered
175 Nyasaland and gradually expanded until Jalasi,
648 as he became known, dominated the area around Mount Mangoce in the present Fort Johnston District, and Kawinga, safely ensconced on Mount Cikala, dominated most of the area north of this point. Jalasi, Kawinga and Liwonde were heavily defeated by British forces in 1895–6 and driven out of British Territory. Later on they were allowed to return after they had been ordered to surrender and effectively disarmed. When they had returned, the chiefs were virtually ignored and as far as can be ascertained the effect of the British government was to destroy the power of the chiefs and substitute the system of British administration for theirs. Nevertheless, it is apparent from entries in the District Book that even though it were not the official policy, the administrating officers considered it important that the chiefs should maintain some power. Thus when Kawinga III died in August 1905 the District Book records: "There were two claimants to the succession, Kumlomba and Chiwalo. Their claims were really very equal and H. M. Commissioner (April 1906) called in Kumlomba and the most important headmen and decided the succession by their vote." The

8:Mitchell E-5 (1946-1947) 1949 FT7 Yao FT7
[P.146C]

643
551

[601]

[1] The Nyambi chieftancy developed from the Nkata line as explained below.

[2] The clan names of the Yao unlike those of most other Central African tribes, appear not to refer to common objects of everyday life. I could not get a translation of *mahow* and of most other clan-names.

[3] A man calls his father's sister's son *mitoma* (cross-cousin) but since this cross-cousin should in due course succeed to the (man's) father's name, he may also call his cross-cousin "father".

9.Lawson Y-5 (ca.1940)1949 FT7 Yao FT7
MARAVI FRY

[P. 180C]

161 and Yao tribes, who there predominate. These
[174] peoples seem to have come from different parts
[177] of the continent. Their languages, despite a
common Bantu descent and much recent borrowing, remain as distinct as possible and are obviously not modern dialects of one more primi-
[177] tive tongue ; their original social structures must, however, have been similar enough to attract them to each other, for they have so intermarried and their customs so fused, that one can now scarcely distinguish their ways of life and village
101 organization. Indeed, while homesteads of appa-
619 rently pure Nyanja and Yao still predominate, every considerable district contains members of both tribes, with some people, at least, of mixed descent ; moreover, and although one perceive a difference of character and manners, and trace it to the influence of Mohammedanism on the
[601] Yaos, one may well be unconaciously exaggerating. This account of relationship terms, (with brief reference to underlying social structure), must be taken, therefore, to cover the fusion of two once-separate tribes, and Nyanja and Yao equivalents must—unless otherwise stated—be
[177] understood as identical in meaning. In fact, Nyanja often prefer Yao terms to their own.

177 How far can one isolate the Nyanja-Yao
602 social structure in order to study it ? Ngoni immigrants in this district are few, and their original patrilineal social system has largely succumbed to the customs of these earlier comers. The matrilineal system of the still more recent and numerous Lomwe immigrants is, I believe, (though my evidence is fragmentary), exerting a considerable influence on the somewhat dissimilar but also matrilineal Nyanja and Yao.

M 592 602 all kinds of quarrels. As she, like her daughter after her, married a cross-cousin from Saima village, her husband is a Milanzi, and although a man of character whose advice is welcomed, and called *ambuye* by Abena's generation, his voice has not the same weight as hers in deciding village affairs.

M 601 [553] Abena the girl, then, grows up under the care of her mother's mother, who by naming her at birth claimed her as her heir and especial trust, and who singles her out from her younger brothers, sisters and cousins by the way she addresses and treats this first-born and favourite. As M [551] personal names are not normally used or referred to in conversation, Abena I speaks of, and to, Abena II as *mdzukulu*, (the name used to cover all grand-children, besides a man's nephews and nieces, and so best translated as "heir"). More commonly the old woman and the girl call each other respectively, *mkulu wanga*, (i.e. "my elder sibling of the same sex", between women "my elder sister"), and "*mphwanga*", (i.e. "my younger sibling of the same sex", Y between women "my little sister"). The Yao [601] term *chemwali*, which may be exactly translated as "elder sister", is also often used, as is the familiar reciprocal term—between all grand-M parents and grand-children, *anganga*; but the [553] special titles used between a person and his or her name-child and heir are *nzinanga*, (literally, "my namesake"), and *bwenzi langa*, ("my friend, lover").

M 601 But Abena II has other *ambuye* in the village. Her grand-mother's younger sisters and their husbands are called by this same name, and all call her *mdzukulu* and encourage her to treat them with the like friendly confidence. More familiarly, the old women and the girl may speak of each other as *mkulu wanga* and address each other as *chemwali*—Abena II would not be called *mphwanga* because she is potentially their elder sister, the future *ambuye* of the village—while the old men and the girl can speak of each other as *mnwani wanga*, (my cross-cousin), and address each other as *alamu*, (brother-or-sister-in-law). These last names I will explain later, when discussing the relationship between Abena

M
582
M
Y.
601

9:Lawson Y-5 (ca. 1940) 1949 FT7 Yao FT7
[P183]
MARNI FRY

CROSS-COUSIN MARRIAGE

TABLE X

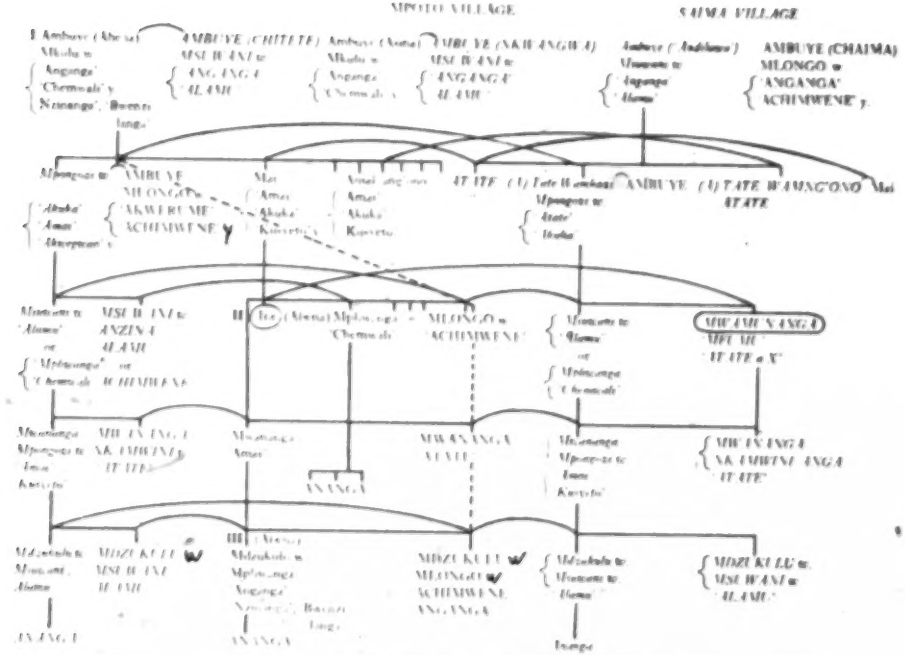

9:Lawson Y-5 (ca. 1940)1949 FT7 Yao FT7 MARRIAGE FAY

[P. 186A]

ABENA AND THE BOYS ARE "ALONGO," (SIBLINGS OF OPPOSITE SEX REGARDLESS OF RESPECTIVE AGES), TO EACH

M Y 601 other, and address one another generally by the Yao terms of *achimwene* to a boy and *chemwali* to a girl.

M 593 602 Behaviour between true, and almost equally between classificatory, brothers and sisters suggests deep and lasting affection — far deeper affection than does that between man and wife. M [582] [584] When, at or before puberty, Abena's betrothal is arranged, her eldest brother will be the go-between ; later, she may turn to him, and through him to her mother's brother, for advice and help in adjusting herself to married life, and in any serious quarrels with her husband. There are no taboos between them, and if her brother is benighted near the home village on his way to his wife's home, Abena can share her supper with M [601] him and give up to him her sleeping-mat. True brothers and sisters are so close that they consider each others' husband or wife as by adoption a blood relation, calling them brother or sister. (*mphwanga*, *mnjiranga* between those of the same sex, and *alongwanga* or *achimwene chemwali* between those of opposite sex), I believe this is the only instance of a term describing a relationship within the matrilineal family group being applicable also to cross-cousin affinity and even to strangers from a far village. M [587] Most informants declare that it would be unthinkable incest to marry a deceased brother's wife or sister's husband, yet not all are ready to call them brother and sister.

M [462] As the Nyanja are an agricultural rather than a pastoral people, there is no rigid division of all labour between the sexes, nor of boys and girls into age-groups ; as in a modern European family, "brothers" and "sisters" play together freely in childhood, and still, though less freely, in adolescence. M 857 868 However, the girls of the village form a loose group with Abena at their head. Growing up together from infancy they learn from each other and through imitating the grown-ups, (*akulu*), until play develops into work, and at an early age the little girls become less of a burden than an asset to the *mbumba*. At eight or nine Abena can pound maize into flour and cook porridge with a relish of leaves, carry heavy water-jars from the stream, scratch up weeds

9:Lawson Y-5 (ca. 1940) 1949 FT7 Yao FT7
MARAVI FRY
[P. 187 C]

M
Y
191
601
114

[1] It is interesting here to compare the Nyanja and Yao with certain patrilineal peoples. Junod, finding similar behaviour patterns to the mother's brother and father's sister among the patriarchal Bathonga of Portuguese East Africa as among matriarchal people, traces them to a hypothetical early matriarchal stage of social organization. Radcliffe-Brown, however, in his article on the Mother's Brother in S. Africa, suggests a different origin. At least two other non-Bantu patriarchal tribes—the Polynesian Tonga and the Nama Hottentots—are like the Bathonga in these behaviour patterns. May this behaviour not spring simply from a tendency to extend to one's mother's and father's groups behaviour suitable to mother and father respectively.

This explanation would not, as of course Radcliffe-Brown realizes, apply to a matriarchal people like the Nyanja, where one hangs at a respectful distance from one's father's sister, but is more under the authority of one's mother's brother than of one's father.

11: Sanderson D-5 (ca.1920) 1920 FT7 Yao FT7

RELATIONSHIPS AMONG THE WAYAO.

By Meredith Sanderson,

Medical Officer, Nyasaland Protectorate.

Introductory.—Various writers have attempted to give English equivalents to the Yao terms describing relationship, or have alluded to the outstanding features of the system, but I am not aware that anybody has hitherto worked out the whole system. 121

Although it is very similar to other classificatory systems, I feel that a description of it may not be quite valueless, more especially on account of the evolutionary changes that are taking place.

The WaYao are a Bantu tribe, exogamous but not totemic, which until the middle of the last century inhabited that part of Central Africa lying to the East of Lake Nyasa, particularly in the valleys of the Lujenda and Rovuma rivers. Up to that time the tribe had not extended far from the area indicated except perhaps in a northerly direction, but owing to constant internecine war in their own territory the Yaos then invaded and conquered a large part of the neighbouring territories, especially to the south, in what is now called Nyasaland. 101 131

I have said that the WaYao are not totemic, and that statement is correct at the present time. Opinions differ, however, as to how recent their loss of totemism is; though their initiation ceremonies are generally regarded as totemic, even there, in my opinion, the evidence is not conclusive, and there remains no suspicion of totemism outside those ceremonies. 171

It should be mentioned that Islam is much more prevalent among the Yaos than among their neighbours, but its influence is not yet so deep-rooted as greatly to obscure the pure tribal customs, except to a certain extent among the rising generation. [177]

To facilitate description the relationships are given in tabular form, the relationship being given with reference to one man or woman. [128]

In Table I, Column 1 describes the relationship, Column 2 gives either the nearest equivalent of the Yao term, or, if none, the actual terms. Columns 3–9 give the various relations of the person named in Column 1, as they would be named by the man or woman under consideration. 601

For example, the brother of (*a*)'s father (Column 1) is regarded as (*a*)'s father (Column 2), the wife of (*a*)'s father's brother is (*a*)'s *alwepo* (Column 3), their child is his "brother" or "sister" (Column 4), and so on (see Table I).

11:Sanderson D-5 (ca. 1920) 1920 FT7 Yao FT7

601 In Table II, the relationships mentioned in Column 1 are defined in Columns 2-9.

Thus a brother (of (*a*)) is, *inter alia*, the son of (*a*)'s father's brother (Column 3), the husband of the daughter of (*a*)'s father's sister (Column 4), and so on (see Table II).

Before the tables can be fully intelligible, however, a brief explanation of terms having no English equivalent is necessary :—

(*a*) *Akwego* and *Alamu* are terms exclusively given to relations by marriage.

Alamu is a brother or sister by marriage—it is not advisable to use the terms "brother-in-law" or "sister-in-law" as they are too circumscribed.

Akwego has not even an approximate equivalent in English owing to the diversity of relationships included (*e.g.*, wife's mother and great-grand-daughter's husband).

Meishani is a special term given to the children of a paternal aunt or maternal uncle, to distinguish them from those of a paternal uncle or maternal aunt.

[582] *Meishani* are not only allowed to marry but are encouraged to do so.

Akwelume is used only for a maternal uncle, and *chipwe* is the reciprocative term for a sister's son.

The use of inverted commas with English terms (*e.g.*, "brother") indicates that the person is regarded by the Yao as being of the same relation to him as the term usually signifies in English. Thus a Yao regards the son of his maternal aunt, for instance, as being exactly the same relation as his own brother (by the same parents); this relationship is indicated as "brother."

601 428 *Succession.* The common rule of discriminating between the children of a brother and sister and those of two brothers or of two sisters is present here, and is combined with the equally common one of succession to the sister's son.

The rule of succession is, strictly speaking, to the eldest son of the eldest sister. If, however, a man and his advisers consider him to be unsuitable, or in event of his death, the succession passes to the following in order of precedence : younger son of the eldest sister, younger son of a younger sister, and son of own daughter.

Only by general consent can the succession pass elsewhere, but it not infrequently happens that intrigue procures the death of all the legal heirs of a wealthy or powerful man. In such cases, but only by general consent, the succession may pass to a brother (by the same mother), any "son," or even to a powerful vassal ; it is often felt that a wealthy or influential man is likely to conduce to the peace and welfare of the country rather as the chief, than as a probably turbulent vassal of a man whose succession is apt to be controversial. On the death of such a man, however, matters are often in a state of chaos owing to the multitude of claimants, the members of the two families ; I have known two such cases. A man, also, who

[TEXT CONTINUES ON PAGE 374--ANALYST]

11: Sanderson D-5 (ca. 1920) 1920 FT7 Yao FT7

TABLE I.—*Showing the Yao relationships of one person.*

1.	2.	3.	4.	5.	6.	7.	8.	9.
English Relationship.	Yao Relationship.	Relationship of Wife or Husband.	Relationship of Child.	Relationship of Child's Wife or Husband.	Relationship of Grandchild.	Relationship of Grandchild's Wife or Husband.	Relationship of Great-Grandchild.	Relationship of Great-Grandchild's Wife or Husband.
Own father	Father	Mother	Brother or sister	*Alawa*	Child	*Alwepo*	Grandchild	*Alwepo*
Own father's brother	Father	*Alwepo*	Brother or sister	*Alawa*				
Own father's sister	Father	Father	*Meiâwai*	Brother or sister				
Own mother	Mother	Father	Brother or sister	*Alawa*				
Own mother's brother	*Alwelawa*	*Alwepo*	*Meiâwai*	Brother or sister				
Own mother's sister	Mother	Father	Brother or sister	*Alawa*				
Husband or wife's father	*Alwepo* (father)	*Alwepo*	*Alawa*	Brother or sister				
Husband or wife's father's brother	*Alwepo* (father)	*Alwepo*	*Alawa*	Brother or sister				
Husband or wife's father's sister	*Alwepo* (father)	*Alwepo* (father)	Brother or sister	*Alawa*				
Husband or wife's mother	*Alwepo*	*Alwepo* (father)	*Alawa*	Brother or sister				
Husband or wife's mother's brother	*Alwepo* (father)	*Alwepo*	Brother or sister	*Alawa*				
Husband or wife's mother's sister	*Alwepo*	*Alwepo* (father)	*Alawa*	Brother or sister				
[1]Brother's wife's [1]brother or [1]sister	*Alawa*	Brother or sister	Child	*Alwepo*	Grandchild	*Alwepo*	—	—
[1]Sister's husband's [1]brother or [1]sister	*Alawa*	Brother or sister	Child	*Alwepo*				
Husband's or wife's [1]brother's wife's [1]brother or [1]sister	Brother or sister	*Alawa*	Child	*Alwepo*				
Husband's or wife's [1]sister's Husband's [1]brother or [1]sister	Brother or sister	*Alawa*	Child	*Alwepo*				
Own child	Child	*Alwepo*	Grandchild	*Alwepo*	—	—	—	—

[1] Including son or daughter of maternal aunt or paternal uncle.

601

601

TABLE II.—*Defining Yao terms of relationship.*

1.	2.	3.	4.	5.	6.	7.	8.	9.
Yao Term.	Own Father's or Mother's	Father's Brother's	Father's Sister's	Mother's Brother's	Mother's Sister's	Wife's or Husband's	Son's or Daughter's	Grandchild's
Brother "	(a) Son (b) Husband of (a)'s wife's " sister "	(a) Son (b) Husband of (a)'s wife's " sister "	(a) Husband of daughter (b) Husband of (a)'s wife's " sister "	(a) Husband of daughter (b) Husband of (a)'s " sister "	(a) Son (b) Husband of (a)'s wife's " sister "	(a) Male *Aniamsi* (b) Husband of " sister " (c) " Brother's " wife's " brother " (d) " Sister's " husband's " brother "	—	—
" Sister "	(a) Daughter (b) Wife of (a)'s husband's " brother "	(a) Daughter (b) Wife of (a)'s husband's " brother "	(a) Wife of son (b) Wife of (a)'s husband's " brother "	(a) Wife of son (b) Wife of (a)'s " brother "	(a) Daughter (b) Wife of (a)'s husband's " brother "	(a) Female *Aniamsi* (b) Wife of " brother " (c) Brother's wife's " sister " (d) Sister's husband's " sister "	—	—
" Father "	" Sister " (of own father)	" Brother "	(a) " Brother " (b) Husband	—	Husband	(By courtesy) (a) Father (b) Father's brother (c) Father's sister (d) Husband of (c) (e) Husband of mother's sister (v. *abwapa*)	—	—
" Mother "	" Sister " (of own mother)	—	—	" Sister "	" Sister "	—	—	—

11: Sanderson D-5 (ca. 1920) 1920 FT7 Yao FT7

601

Aloma	(a) Husband of daughter (b) Wife of son	(a) Wife of son (b) Husband of daughter (c) "Brothers" and "sisters" of (a) and (b)	—	—	(a) Wife of son (b) Husband of daughter (c) "Brothers" and "sisters" of (a) and (b)	(a) "Brother" (b) (a)'s wife's brother's wife (c) (a)'s wife's "sister's" husband (d) "Sister" (e) (d)'s husband's "brother's" wife (f) (d)'s husband's "sister's" husband	—	—
Alonge	Husband or wife of a child of a "brother" or "sister" of the wife or husband of son or daughter	—	—	Wife	—	(a) "Father" and "mother" (b) Paternal uncles and aunts (c) Wives of uncles (d) Husband of mother's sister (e) Husband or wife of child of a "brother" or "sister" (f) Husband or wife of (e)'s child	Husband or wife	Husband or wife
"Son" or "Daughter"	(a) Grandchild (b) Child of child's wife's or husband's "brother" or "sister"	Grandchild	Grandchild	Grandchild	Grandchild	"Son" or "daughter"	—	—

11:Sanderson D-5 (ca. 1920) 1920 FT7 Yao FT7

601 428 knows that he is not legally justified in "entering into the name" is loath to do so, as he knows that he is not expected to make a successful chief. The defeat of Salimu, the fifth Makanjila, by the British in 1893 was, and still is, ascribed to the fact that he belonged to the male line.

The term *chipwa* (*mwipwanwao*, "his *chipwa*") may be used for any child of a sister. A female title (common amongst the Yaos) descends to the eldest daughter of the eldest son of the bearer of the title.

582 601 587 *Marriage.*—Relatives who are forbidden to marry are called *achidawako*; they include all those given in the table except *asidusi*, *achiwesukulu* ("grandchildren"), and the wife of the maternal uncle. An heir, on succeeding, may marry the wife or wives of his maternal uncle, but not if he has previously married one of his daughters.

It is legal, though rare, for a man to marry the daughter of his own child (*chiwukulu*).

614 601 "*Brothers*" *and* "*Sisters.*"—The term *ulongo* is used to describe an exogamous clan, and the members are known as *mlongo* (singular)—*achalongo* or *do chilongo*, collectively. This word *ulongo* is probably a corruption of *mu ulongo* ("in the clan") as it requires the use of the term *mjakwe* (*ajao*) "a companion," instead of the possessive pronoun. Thus *ulongo mjakwe* (*achilongo ajao*), "his (their) clan relatives" (instead of *ulongo jwakwe*, *achalongo wao*).

601 There is no general term corresponding to the English "brother." The nearest is *alumbu*, which describes the relationship between a "brother" and a "sister," it is rarely used by women, however.

The elder "brother" of a man is called *akulu* or *achiwewe*. These terms are used for all sons of a father's elder "brother" or of a mother's elder "sister," and for the elder brother by the same parents. They are also used by a woman for any "brothers," older or younger, senior or junior, in preference to the term *alumbu*.

Mpwanga is used for a son of a father's younger "brother" or of a mother's younger "sister," and for a younger brother by the same parents. It is used by a woman for her "sisters" in exactly the same way, but is never used by a woman of a man.

A man calls his "sister" *chewali*, collectively, *wanajawo chewali*; a girl refers to an elder, or senior "sister," by means of the same term; a man refers to a "sister" as *alumbuwangu* or *ne chewali*.

The term *chiwukulu* is used for a "grandchild" (*mwiwukuluwangu*, "my 'grandchild'").

"*Father*" *and* "*Mother.*"—A paternal aunt is distinguished as *atati wakongwe* ("female father") if necessary, though she is, of course, not addressed as such. The elder brother of a father is referred to as *atati wakulungwa* ("the great father"), his younger brother as *atati wanandi* ("the little father"). Other *achatati* are similarly distinguished.

11: Sanderson D-5 (ca. 1920) 1920 FT7 Yao FT7

The alternative term, *wao*, common to nearly all Bantu languages, is usually reserved for "own father," but not always. 601

Latterly, though the relationship is really *akwayo*, the husbands of a man's "daughters" or "grand-daughters" are called *atati* in a complimentary sense, not of course in defining relationship.

The word *akwayo* is rapidly falling into desuetude for men, and is, nowadays, never used in speaking to a man of that relationship, though used freely as a mode of address to women.

Amao (or *achikulu-wangu*, *-wao*, etc., "my, his mother") may be further defined as "great" or "little" in the same manner as *atati*.

The parents of any *atati* or *amao*, and those of one's wife are called *ambuje* ("grandparent"). Great-grandparents are specified as "father" or "mother of my grandfather (or mother)."

The founder of a family is called *Likolo*, especially in prayer—except for the augmentative prefix obviously the same word as *Nawpolo*," a parent," which includes all "fathers" and "mothers." [182]

It is curious in this connection that a name for little girls in general, if one does not know their real name, is *chikolo*. All these words seem to be derived from *-kola* ("have," "possess"), and refer, probably, either to actual or potential possession of offspring.

Achinangolo are distinguished as "male" or "female" according as they belong to the father's or mother's side—irrespective of their own sex.

Conclusions.—The Yao nomenclature of relationships, bearing as it does the evidence of former group marriages, is, like other classificatory systems, gradually changing in conformity with the development of the race, so that it can be used to express consanguinity; Rivers has, I believe, called attention to this process. 601 178 [12]

The Yao custom—now dying out—of lending one's wife to a visitor (usually a close friend) may be a remnant of ideas carried on from communal marriage, though such a privilege is never given to a relative. [83] [50]

In the same way's man who has had no children (a great stigma) may request his friend to help him—he will never ask a relative and all of the three parties will keep the secret of the true paternity of any children resulting. [83] [80]

In many tribes the marriage of brother and sister, or a man with his sister's child, is permitted to compensate for the law by which a man's property goes to the son of a stranger, but nothing of the kind is allowed among the Yaos. Indeed, they view any incestuous union with particular horror, and such must be very rare. I have heard of a case of a man committing incest with the idea that he would thereby become endued with supernatural power, but all he gained was ostracism; in the old days he would have been burned. 588 835 [29]

ibele (plur. *mabele*), a breast. This includes all who are supposed to be descended 614
from a common ancestress. Often the direct line of descent from the founding 613
ancestress is not known for more than three or four generations. The small groups which can definitely claim to be 'of one breast' constitute the distinct matrilineal [621]
groups which live together in separate hamlets within a village. Each is undifferentiated in relation to other matrilineal groups, but internally each is differentiated on the principle of sibling unity.

The main emphasis of the kinship system is on the bond between a man and his 593
sisters. Their relationship is summed up in the word *mbumba* (translated by Mitchell 602
as 'sorority group'). A man speaking of his *mbumba* refers to all the women he calls sister, their daughters, and their daughters' daughters. Strictly speaking, female kin in the ascending generations are excluded, as belonging to the *mbumba* of his mother's brother. The 'warden' of a sorority group, *asyene mbumba*, is the senior of the brothers and is responsible for the behaviour of the women in his charge; he appears for them in court and pays fines on their account. He plays an important part in the marriage negotiations. It is his duty to consult the diviner if his sister or her child falls ill, and to be chief mourner at the funeral of either of them, also providing medicine for the ritual purification at the end of the mourning period. Formerly these obligations were balanced by certain rights. He could sell some of them into slavery for his own personal reasons. This privilege is ended, but even to-day it is through his sorority group that a man achieves status and independence.

The principle of sibling unity is expressed in many other ways. A man and his 601
sister reciprocally call each other *alumbwangu*. More usually, a woman calls her 602
brother, older or younger than herself, *acimweni* (a term of respect usually applied to a chief), for any brother may be regarded as warden of her sorority group. A man has the same duties to his younger brothers as to his sisters, so they also call him *acimweni*, but he calls them *mpwanga* 'younger brother', as they can never be in the position of warden in relation to him. Maternal uncles are called *akwelume*, and a sister's son *cipwa*.

Within each matrilineal descent group, differentiation takes place between members 602
according to whether they are siblings or not. A man's sorority group included ideally 593
his own siblings and their female matrilineal descendants. His sister's daughters are also the sorority group of his sister's son, their brother, so that any woman can belong at any one moment to the sorority groups of her brother, her mother's brother, her mother's mother's brother, &c., but the effective one is that of her own brother, if adult. He is consulted first in small disputes, and at the marriage ceremony each party is represented by a brother as well as by a mother's brother. In the break-up of a hamlet (described below, p. 12), siblings tend to hold together more closely than cousins and to form groups of their own, so that each woman in the descent line is a potential point of cleavage. Tension between brothers as they compete for control of [578]
the sorority group is a source of friction within the sibling group which eventually leads to its disruption.

Since marriage is mainly matrilocal, and extra-village, the husband in his wife's 591
village is seen as a stranger by all the members of her matrilineal descent group. There is a tendency for members of such descent groups to live together in a cluster 621
of huts. The word 'hamlet' is used by Mitchell to indicate a cluster of huts, in which 614

1: Tew E-4 (no date) 1950 FT7 Yao FT7

expressed also in the speeches by the marriage sureties. The couple are exhorted to refer disputes to the sureties, and to consult the diviner in case of sickness.[1] After the rite these two sureties have special responsibilities towards the couple; grievances are referred to them, and they must be present when adultery cases are heard in court. If the marriage witness ceremony has not been performed, the relationship is not regarded as legal and no adultery compensation can be claimed by the husband. 585

Divorce used to be a private affair, which was merely signalized by one party giving to the other an arrow as a token of separation.[2] Nowadays all divorce cases go to court. The woman is usually asked to choose between her husband and the adulterer, and the compensation paid to the former, if she decides to leave him, is higher—amounting to about 10s. A man can be sent away from the village by his wife's kin, but if he has given no grounds for divorce he can claim compensation and will also take back any gifts made to his wife. A few small gifts to his mother-in-law are not reclaimed. Divorces are easily obtained and frequent. Grounds for the divorce of a man may include failure to pay hut tax, one of the specific duties of the husband. 586 [431]

The custom of making a marriage payment is recorded by Johnson[3] (on the east coast of Lake Nyasa) as a relatively new adoption. When given it is divided between the bride's father, mother, and mother's brother and brother.[4] 583 177

Slavery

Domestic slavery was an important institution in the Yao social system. Slaves were obtained by capture, purchase, or in compensation for injury.[5] A man would pay a debt by giving slaves (wives or members of his matrilineal kin group) to his creditors.[6] A man might voluntarily enslave himself to a man having charge of many women, as a means of obtaining a wife.[7] The children of a free man and a slave woman were not emancipated, as their father could not take them from the village of their mother's master, who had the right to sell them.[8] Slaves took part in the ordinary life of the village; women slaves ranked as junior wives of their masters and shared the usual work of women. Men might be supplied with guns for hunting or might accompany their masters to war, trade for them, spin, weave, sew, make baskets.[9] The institution of domestic slavery was an expression of a dominant motif in Yao culture—the association of status with a large number of dependents. Its abolition by the British was in itself a major blow to the prestige and authority of the chiefs. 567 [554]

Information about the social organization of the Yao in Portuguese East Africa is scanty, but it is in agreement with what is known of the Nyasaland Yao; Heckel, who knew the Yao in Lindi district, Tanganyika Territory, confirms the correctness of Stannus's account of the South Nyasa Yao. 184 602

The Yao came into Nyasaland in small parties of kinsmen. Their experience and their superior weapons soon enabled them to dominate the Nyanja among whom they settled, and today they dominate the population of the Southern Province. They are organized into loose groups of villages, under petty, independent chiefs. They seem 175 [621] [631]

[1] Stannus, 4, 1922, p. 245; Hynde, 1895; Johnson, 5, 1922, pp. 69–73; Macdonald, 1882, vol. i; Werner, 1906, pp. 129–32.
[2] 1922, pp. 72–3.
[3] Werner, 1906, pp. 152–3; Stannus, 4, 1922, p. 237.
[4] Stigand, 1909, p. 122 (not a reliable source).
[5] Stannus, 4, 1922, p. 280.
[6] Macdonald, 1882, vol. i, pp. 166–7.
[7] Ibid.
[8] Stannus, 4, 1922, p. 280.
[9] Werner, 1906, p. 273.

2: Mitchell E-5 (1946-1949) 1956 FT7 Yao FT7

622 643 644 had no hostile axes to grind. Younger brothers and sisters' sons might have used the military forces against him, or they might have squandered the wealth of the caravans because they had a jural right to it. As the sons grew older they were given groups of slaves and slave-wives to look after, and so they became village headmen under the chief. Many of them came to have initiation rights and hold other positions of importance.

622 643 602 601 The chief was also connected to other Invader headmen through marriage. It is clear that affinal links become in time cognatic, but the marriage of the chief with a headman's sister fixes the relationship between that headman and the chief in perpetuity. The succeeding chief does not look upon the village headman who is his mother's brother's wife's brother as a father-in-law, as he would if he were a commoner, but instead calls him 'brother-in-law'. Also, all the successors of the village headman call all the succeeding chiefs by this term, so that the political structure of the area becomes phrased in a kinship idiom: the quasi-kinship of headman and chief in this context becomes suffused with political meaning. The number of village headmen who claim some affinal relationship to the chief is not great—only 10 of the total of 205 (i.e. 4·9 per cent).

TABLE VIII

PROPORTIONS OF RELATED AND UNRELATED HEADMEN AMONG THE NEWCOMERS

622 643 602

Chief's Relatives						Non-Relatives	Total
Direct			Clan				
Mat.	Pat.	Aff.	Mat.	Pat.	Aff.		
0 0	13 3·4	15 3·9	24 6·3	13 3·4	16 4·2	300 78·8	381 100%
7·3%			13·9%			78·8%	

Among the Aborigines and Newcomers, naturally, there are very few direct relatives. There are, of course, no matrilineal relatives. The patrilateral relatives amongst the Newcomers (3·4 per cent) are those of Kawinga who have moved into Chamba and Liwonde areas. There have been various mar-

2: Mitchell E-5 (1946-1949) 1956 FT7 Yao FT7

riages between the chiefs and Newcomers and as a result there are 3·9 per cent of the Newcomer headmen who are linked affinally to the chiefs. The proportion of affinally-linked headmen in the two categories is approximately the same. The major differences are among the proportions of headmen linked by matrilineal and patrilateral ties to the chief.

Clanship with the Chief

A more numerous category is those who are related to the chief, not by common descent but by clanship.

Informants tell me that before the Whites came to Nyasaland, each person took the clan-name of his mother. People who had the same clan-name were said to be ' of one kind ' (*lukosyo lwamo*). The word *lukosyo* had no other meaning but ' kind ' or ' sort ', and the word *mtundu* is frequently used as a synonym. If a man is asked his *lukosyo*, he is as likely as not to give the reply ' Yao ' or ' Machinga ', i.e. his tribal origin. By extension it follows that if two people have the same clan-name inherited from their mothers, and their mothers in turn have inherited it from their mothers, and so on, eventually there must be a common ancestress. The two people therefore call each other ' brother '. However, among the Yao there are no stories of the origin of clans and only vague traditions of a common clan ancestress. I often questioned Yao about their clan-names and joked with them that though they were Invaders they shared the same clan-names as their subjects. The clan-names I found among the Machinga Yao were *apiri*, *amilasi*, *ambewe*, *abanda*, *asimbiri*, *amwale*, *angoma*, and these clan-names also appear among the Marawi group of tribes (Cewa, Manja, Cipeta, Mbo, etc.), the Lakeside Tonga of Chinteche district, and the Mpotola and Lomwe or Nguru from Portuguese East Africa. The Achisi Yao under Katuli, a group related to the Mataka Yao from Portuguese East Africa, do not have these clan-names, nor, as far as I know do the Yao in Tanganyika. Clan-names, therefore, may be a feature of the Machinga Yao in Nyasaland, acquired as a result of their contact with the Marawi and other indigenous peoples of that country. It is significant that the clan-names are not as a rule common Yao words for everyday objects in the same way that clan-names amongst, say, the Bemba of Northern Rhodesia, are names of plants, animals and other natural phenomena. The word

2: Mitchell E-5 (1946-1949) 1956 FT7 Yao FT7

their councillors at the courts. If they were relatives of the chief it is almost certain that he would have mentioned them. We may assume then that the true proportion of unrelated headmen among the Newcomers is, as we would expect, very much greater than among the Invaders. 622 643

Of the total of 424 Administrative villages there were ten in which I did not record the formal relationship to the chief. In Table IX I set out the proportions in these categories among the Administrative village headmen, and there is no radical difference between these proportions and those for all village headmen. 622 643 602

TABLE IX

PROPORTIONS OF RELATIVES AND NON-RELATIVES AMONG ADMINISTRATIVE HEADMEN*

	Chief's Relatives						Non-Relatives	Total
	Direct			Clan				
	Mat.	Pat.	Aff.	Mat.	Pat.	Aff.		
Invaders . .	18 (13·2)	23 (16·9)	6 (4·4)	24 (17·6)	11 (8·1)	9 (6·6)	45 (33·1)	136 (99·9 %)
Newcomers .	0 (0·0)	9 (3·5)	12 (4·7)	20 (7·8)	11 (4·3)	12 (4·7)	193 (75·1)	257† (100·1 %)
Total . .	18	32	18	44	22	21	238	393

$n = 6$; $\chi^2 = 90·5$; $p = 0·0001$.

* This table excludes the 21 Aborigines.

† Excludes 10 villages for which I have not recorded this information.

To summarize, we may characterize the Invaders as Yao, Moslems, and associates of their chiefs by historical connections and kinship ties. The Newcomers and the Aborigines on the other hand are of different tribes. They have more diverse religions, are not connected to the chiefs by kinship ties as closely as the Invaders are, and do not share with them the strong bond of being co-Invaders. It is in the struggle for prestige and rank that these bonds with the chiefs assume significance. 622 643 602 563 554

2: Mitchell E-5 (1946-1949) 1956 FT7 Yao FT7

brought out of the hut, as always, songs were sung and speeches were made. One of the songs was : 'A tree when it grows, grows with its branches.'[1] This is a reference to the dependence of the village headman upon the increase of his relatives for an increase in his rank. The Yao compare kinship with a tree, the component segments of the maximal lineage (the tree) being the branches. Then one of the officiating headmen mentioned that there were many sisters' sons of the old Mapata but that Kawinga and Chiwalo had selected the one on the chair to be the headman. He then exhorted the others neither to be jealous nor to resort to sorcery, but to exalt the name[2] that it might live long. This was followed by a song which introduced a second theme, 'A husband however rich he becomes here, cannot climb high.'[3] This song emphasizes that the uxorilocal husbands of the village can never achieve rank outside their own matrilineal villages however rich they are. The officiating headman then went on to say that some women rebuke their husbands when they speak subversively, but others side with them against the village headman. He told the husbands and women that they were wrong to do this and that they must desist. After this followed a public rebuke of the village as a whole. One of the younger brothers of the new headman pointed out that when the mother of the previous Mapata had died she had been buried in the graveyard and not in the village. He rebuked the villagers and told them that, when the present chief died, he should be buried in the village. A man who had been charged with neglect by his wife (his cross-cousin) paid the headman the compensation which he had refused to pay to her. One of the headmen then exhorted the villagers to respect their headman ; to send someone to accompany him on his journeys to see to his wants ; never to allow the headman to carry a gift he had been given, and so on. The ceremony ended when Kapaloma, who was representing the chief, hinted that Mapata might be allowed to wear a scarlet headband in the near future.

Village headmen represented the chief at Nkacelenga's and

[1] *Mtera punkukula ukuwa ŵananyambi.*

[2] *Kwesya lina*—to cause the name to climb.

[3] *Tonde, tonde, mkamwini nasicila muno ngakwela iai.* Tonde is the word for billy goat and its use here emphasizes the procreative functions of the husband in the village.

2: Mitchell E-5 (1946-1949) 1956 FT7 Yao FT7

593 economic responsibility of all the woman's children regardless
586 of whether he has begotten them or not. For example, gossips say that a woman married my clerk so that she could have her son initiated. The costs and fees for this boy's initiation amounted to over a pound.

593 The other set of rights that paternal recognition confers on the child are the moral rights against his paternal kinsmen. A
602 person may turn to his 'father's people' (*kucitati*) in times of dire need, especially if one of them is rich. This right persists after divorce, though the children are adult and otherwise economically independent. For example, a woman who was married to a labour migrant needed clothes badly. She turned to Chiwalo her father, though he had been divorced from her mother for more than 15 years. People in trouble often run away to their father's village and find shelter there. A man who wanted medicine for success in gambling asked his father for it. Another who had broken a sexual taboo confessed to his father who found suitable medicine for him. In each of those relationships there was an intimate personal element.[1] A person has the moral right to appeal to his father or paternal kinsmen, but he has no legally enforceable right to demand help. He has to rely on their kindness and charity. There are few fathers who would deny their children's requests if they are reasonable, but they can if they wish to.

582 The divorce rate is high among the Yao [2] and a typical family
586 of five uterine siblings may have three fathers. Furthermore, a man should not marry into the lineage segment where his brother
613 has married, so that the patrilateral kinship ties of the members of matrilineages tend to spread widely in the vicinity of the village. The effect of this is that the members of the lineage as a whole have widespread connections with neighbours upon whom they may rely in times of distress. But of the individual members of the matrilineage only a few share the same group

[1] Compare Fortes's description of uterine kinship among the Tallensi: '[It] is essentially by a personal bond, a bond of mutual interest and concern uniting individual to individual', *The Web of Kinship*, 37.

[2] Eight of every ten men and women over the age of 40 have experienced a divorce at some time of their lives. Excluding the contingency of death a married couple have only 30 chances in 100 of living together for 20 years. For details, see *Marriage among the Machinga Yao*.

7: Hetherwick M-5 (ca. 1900) 1902 FT7 Yao FT7

775 present fortunes. But it is to the human soul after death, when it is considered as having an influence on the lives and fortunes of those it has left behind in the world and consequently as a power to be propitiated and honoured, that the term *mulungu* is more strictly applied. Freed from the body it passes to *mulungu*, and there is regarded as endowed with powers which it never possessed when alive on
769 earth. To pray to such a spirit is described as *kulomba mulungu*, to worship *mulungu*, never *kiuba* in this case. Such *mulungu* worship enters largely into Yao religious or social life. In almost every Yao village there will be found a shrine which is the centre of the worship of the inhabitants. It consists of a carefully
346 built hut enclosed within a strong grass fence or hedge of a species of cactus plant.
769 The hut itself is built of the usual native materials—the walls of wooden posts,
778 bamboos, and strong reed grass bound together with bark-rope and plastered over with clay or stiff mud. The roof is of grass laid on a framework of bamboos, and is generally covered with long strips of white or coloured calico. On the ridge or apex of the roof are fixed a couple of flags or an umbrella or two. One wall is usually left open so that the interior is easily seen. Within, from the bamboo rafters are suspended handkerchiefs, cloths, bunches of beads, etc., all offerings to the *mulungu* of the dead headman or chief from his friends and relatives. The floor is of clay carefully smeared with sand in native fashion. A raised platform or mound of earth in the centre marks the spot where the grave was made. The
764 *awilo* or officials who preside at the funeral obsequies, first dug for about 8 or 10 feet down in a perpendicular direction, and then on the western side of this well they hollowed out a shallow cave in the earth. In this the body was placed, laid on its side with the knees bent up under the chin, and the face turned towards the east. Various articles of personal property were next placed beside the corpse, clothes, ivory, guns, axes, hoes, etc., and the mouth of the cave closed up with wooden posts and a strong reed mat. The grave was then filled in and the surface
[768] carefully finished as we have seen. At the head of the mound a native pot was fixed in the ground for the reception of the offering of beer which is an almost invariable accompaniment of any act of worship paid to the *mulungu* of the dead.

769 Such a shrine marks the grave of almost every Yao chief or headman, and is
[775 regarded as the abode of his soul or the spot where his *mulungu* is most accessible.
622] If his successor is about to undertake a long journey or enter on any warlike expedition against an enemy or neighbour, he must first *kutaga mbepesi*, place an offering here to secure the favour and assistance of the *mulungu* of the dead. Should a long-continued drought endanger the prospects of the grain crop, the departed chief must be solicited to send the lacking rain. A feast is first prepared, almost always of beer, sometimes with the addition of native porridge, fowl, or game. The worshippers gather round the shrine bringing part of the food which they have prepared. Their priest for the occasion is the successor of the dead chief, sometimes one or other of the *awilo* who placed the body in the grave, or it may be that any other near relation of the dead man is chosen to represent the people and act
[603] as their spokesman. The nearer the relationship the more influence will he have with the dead.

9:Lawson Y-5 (ca.1940)1949 FT7 Yao FT7
MARAVI FR4

and Yao tribes, who there predominate. These peoples seem to have come from different parts of the continent. Their languages, despite a common Bantu descent and much recent borrowing, remain as distinct as possible and are obviously not modern dialects of one more primitive tongue ; their original social structures must, however, have been similar enough to attract them to each other, for they have so intermarried and their customs so fused, that one can now scarcely distinguish their ways of life and village organization. Indeed, while homesteads of apparently pure Nyanja and Yao still predominate, every considerable district contains members of both tribes, with some people, at least, of mixed descent ; moreover, and although one perceive a difference of character and manners, and trace it to the influence of Mohammedanism on the Yaos, one may well be unconsciously exaggerating. This account of relationship terms, (with brief reference to underlying social structure), must be taken, therefore, to cover the fusion of two once-separate tribes, and Nyanja and Yao equivalents must—unless otherwise stated—be understood as identical in meaning. In fact, Nyanja often prefer Yao terms to their own.

How far can one isolate the Nyanja-Yao social structure in order to study it ? Ngoni immigrants in this district are few, and their original patrilineal social system has largely succumbed to the customs of these earlier comers. The matrilineal system of the still more recent and numerous Lomwe immigrants is, I believe, (though my evidence is fragmentary), exerting a considerable influence on the somewhat dissimilar but also matrilineal Nyanja and Yao.

9:Lawson Y-5 (ca. 1940)1949 FT7 Yao FT7
[P.190A] MARAVI FR4

M 592 in-law in place of sons; and it is unlikely that many, indeed any, of his brothers will be able as A has done to overcome matrilocal prejudice. Many relatives, however, live close by, M 361 592 having broken apart from an originally large homestead; less than a mile off live an elder sister of A's mother, (*mai mamkulu*), with a married daughter, and perhaps a mile in the other direction live his mother's mother's brother and his mother's brother, (both *ambuye*), with their families of married daughters and granddaughters, unmarried sons and grandsons—a homestead of seven or more huts. Moreover, about fifteen miles to the East, near the shore of Lake Chilwa, is the original settlement of the Saima clan, to which A belongs through his mother and where, but for the peace brought by the Europeans, he and all his scattered relatives would probably still, he says, be living. Thus, though the average homestead to-day numbers, say, ten to fifteen huts, another part of the original family unit, (*mbumba*), is often to be found in a second small homestead not far off, and large compact villages of up to forty or fifty huts are still not uncommon. One chief's village I know has twenty-six huts, another beside the Shiré has thirty. Both these are matrilocal homesteads inhabited (if my informants were truthful) only by relatives and affines.

Y M 602 The examples cited show how strong is the kinship tie even under modern disruptive influences, and suggest how all-powerful it once was. I have called it a key to Nyanja and Yao society, for I believe their culture derives from it at every point: marriage, homecraft, agriculture, education, religion, were all bound up with the *mbumba*. But my aim here is not to describe the tree, merely to try and unearth its roots; and so, with one suggestion as to how these roots are entwined, I must end.

Y M 614 We find among the Nyanja and Yao vestiges of an exogamous matrilineal clan system which hint at a possible origin of cross-cousin marriage. Any Nyanja or Yao will tell you that he inherits from his mother membership of a certain clan,

The close link of brother and sister is also reflected in the kinship terminology. The common term used by both men and women to address sisters is *cemwali* and it is also applied to all women out of respect. But the term which is used descriptively and sometimes in address, cross-sexually, is *alumbwangu* (my sibling-of-opposite sex). It is self-reciprocal and thereby expresses the special relationship between the man and his sisters. Two sisters address each other in everyday conversation as *cemwali*. When it is necessary to be more specific an elder addresses the younger as *akuluwanga*. These are also descriptive terms. A man addresses his younger brothers as *apwanga* while they address him as *acimweni*. Women also address their elder or younger brothers as *acimweni*. This word is widely used as an honorific title but it is especially used for people who are in authority. The chief, for example, may be referred to as the *mcimweni*, and men frequently call their mother's brothers and other senior matrilineal male relatives by this term. An elder brother has the same duties towards his younger brothers as to his sisters, so that use of the term of address *acimweni* here indicates his position of authority over them.

From the point of view of a warden, his sorority-group is essentially made up of his sisters. We have seen that he is responsible for his younger brothers in exactly the same way as he is for his sisters, though technically they are not his sorority-group. He also has control over his sister's children so that ideally a warden sees his sorority-group as his sisters and their daughters and their daughter's daughters and so on. But a man's sister's daughters will probably have as their warden their own brother who stands in the same relationship to them as their mother's brother stands to their mother. The matrilineage is therefore organized internally in a system of inclusive sorority-groups extending from the eldest surviving member down to the youngest. However, a component sorority-group of a matrilineage does not begin to appear as a corporate group until the man who is to be its leader is old enough to take charge of the affairs of the women under him. Naturally, the age at which this happens is largely a matter of circumstance. Theoretically a man may not take charge until he has been initiated. But Yao boys nowadays are usually initiated at about 8 to 10 years of age. Obviously a child of this age cannot take over the affairs of his adult sisters, so that his mother's brother looks after

613 them until he grows up. It is only when the boy becomes
562 adolescent that he begins to take an active part in these affairs.
593 This may begin in a small way. He may, for example, accompany
604 his mother's brother when he goes to consult a diviner. Or he

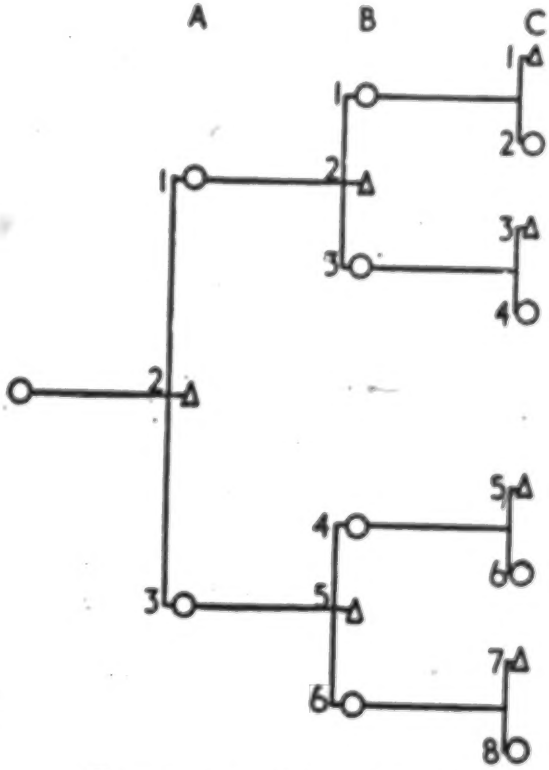

DIAGRAM 3. THE SORORITY-GROUP.

A2 sees his sorority-group as being composed of A1 and A3 and by extension *their* children.

B2 sees his sorority-group as B1 and B3 and by extension *their* children.

B5 sees his sorority-group as B4 and B6 and by extension *their* children.

may be given the charge of the conjugal affairs of one of his newly-married sisters. Gradually he assumes more and more responsibility. His mother's brother on the other hand falls more and more into the background and becomes rather a consultant than an active participant.

622 the children of Ncilaga (C5) and Bt. Mkwinda (C6). There
613 was a big difference in the ages of these two women. Ncilaga
561 died nearly 30 years ago but Bt. Mkwinda died in 1948. When Cikoja V (C1) died in 1936, Salimu II (D3), who was born in about 1914, was very much younger than the present Cikoja VI (E7), who was born about 1895. Ncilaga (C5) had no sons, nor had Atabiya (D1), her eldest daughter, so the succession passed to the only son of Amaliama (D2) who was the senior male in that generation. Salimu II, genealogically senior to the present Cikoja, is to be the next headman. He has married a 'cross-cousin' (his mother's mother's brother's daughter's daughter's daughter) and lives in the village. He has already taken over the affairs in one section of the village. The other section has moved out and built about half a mile away with the present Cikoja VI. Note that the junior house—i.e. the descendants of Citeleka (A2)—are completely out of the succession. Wegami's (E1) eldest son, Cilimba (F1), is living virilocally with Cikoja VI in his section of the village and is already opposed to the prospective village headman Salimu. He is likely to be the village headman after Salimu dies and may even push his claim when the present Cikoja VI dies, because Salimu has been accused of sorcery on several occasions.

622 The conflict between sister's sons and mother's brothers at
578 successions has all but fallen away. The people oppose with
604 some vigour the idea that a younger brother should succeed. Frequently the chief or headman would rather his younger brother succeed, and sometimes indicates him as his successor. Kawinga, for example, has given his pre-succession name of Mlomba to his younger brother and many say this is tantamount to announcing Mlomba as the next Kawinga. This is violently repudiated by most people I have spoken to and they indicate a sister's son as the likely successor. Jalasi too, before he died in 1941, indicated Mbawa, his mother's younger sister's son as the successor, but when it came to the point a sister's son succeeded. The weight of custom is in favour of the sister's sons and usually the succession is fought out among uterine or collateral brothers in the first descending generation.

643 A matrilineal relative is always chosen to be chief in preference
662 to any other, but sometimes there is no heir. Other things being equal an unsuitable matrilineal relative will be chosen, or a

2: Mitchell E-5 (1946-1949) 1956 FT7 Yao FT7

part of the normal duties of a matrilineage leader to his kinsmen.[1] 613
But ideally each marriage is supposed to have two marriage
sureties. The first, or senior, surety is called *mkokowogona*, which 561
was described to me as 'the log that lies at the doorway'. The 582
picture here is of a wise old man who cannot move around too easily, but who sits at the doorway of his hut ready to give advice and information to his younger kinsmen. In contrast to this is the junior surety. He is called *mkupamame* or the 'beater down of dew'. He is pictured as a young man, who is vigorous about his daily tasks and who is waiting before the dew has evaporated in the morning, at the door of couples who have difficulties. He is essentially the 'one who walks about'.

The senior marriage surety is ideally supposed to be a mother's 613
brother, while the junior marriage surety is supposed to be a 561
brother. In fact, while the junior marriage surety is almost 582
always a brother, though not necessarily an elder brother, the
senior, for reasons which will emerge later, is frequently not a 604
mother's brother. However, in the Yao mind the two are fixed in the relationship to each other as mother's brother and sister's son. The fundamental conflict of their positions is expressed by the opposition of the concepts of the 'recumbent log' and the 'active man'. This view is consistent with the segmentation and internal differentiation that must go on within a lineage. As the segments of the matrilineage become progressively independent of each other, the senior relatives, who formerly held them together, become less and less active in their affairs. In Yao idiom they become 'recumbent logs'.

The relationship between mother's brother and sister's son 604
therefore is fundamentally ambivalent. By the values surrounding 627
the concepts of descent and relationship, a sister's son and mother's brother are close kin and bound together in their attachment to a common ancestry and to a common set of living women who are in their joint care. At the same time the mother's brother, belonging as he does to the parental generation, must be respected by his sister's sons. Recalcitrant sister's sons may be made to toe the line by a number of different sanctions. A mother's brother, for example, may take his case to an arbitrator and bring the force of public opinion to bear upon his

[1] I have described the rôles of the marriage sureties more fully in *Marriage among the Matrilineal Yao*.

2: Mitchell E-5 (1946-1949) 1956 FT7 Yao FT7

604 627 sister's son. This, however, is not common because matters such as these, the Yao feel, ought to be settled within the matrilineage, or at least among kinsmen. The more usual procedure is for the mother's brother to take his complaint to some senior matrilineal relative who may be a perpetual mother's brother of the mother's brother, as say Cibwana Kawinga is to Cikoja.[1] Or if the matrilineage is part of a village, the mother's brother may take his case to his village headman, who is as likely as not his perpetual father. The senior relatives have the force of authority and public opinion behind them and frequently some agreement can be reached at this level. Where this is not possible, say because the perpetual elder relative lives too far away, the mother's brother may take the sister's son to court and bring the sanction of the Native Authority's punishment upon him. This is very rare.

604 781 There is still a certain mystical sanction behind the mother's brother's control over his junior relatives. This is based on the curse, which in turn draws on the belief in common ancestor spirits. A mother's brother may say to a sister's son or other junior matrilineal relative: 'If you have never sucked from the breast of my sister, nothing dreadful will happen to you.'[2]

604 754 The fear of sorcery is another force which operates to control the wayward activities of a sister's sons. People in senior generations are usually looked upon as having particularly wide knowledge of potent medicines. Though a sister's son may sometimes use sorcery against his mother's brother, the reverse is believed to be more likely to happen. I have recorded elsewhere[3] the details of a case where a sister's son left a village, against his mother's brother's wishes, to find work in town. He subsequently met his death in an accident while trying to get the honey out of a wild bees' hive in a treetop. At home his death was attributed to the sorcery of his mother's brother whose will he had frustrated.

604 578 On the other hand the sister's sons, while bound by an ethical code to honour and respect their mother's brothers, find that in fact these stand in the way of their own personal ambitions. A man's heir is his sister's son and it is quite understandable that there should be some tension between a man and his heir. But

[1] See p. 132. [2] See Chap. VI, p. 135.
[3] 'A Note on the African Conception of Causality', 34-5.

2: Mitchell E-5 (1946-1949) 1956 FT7 Yao FT7

the opposition between mother's brothers and sister's sons in general has a much wider basis than this. Any man is likely to have more than one sister's son of whom only one is his heir. Yet his other uterine nephews are as much opposed to him as the heir is. The tension lies in the position of the mother's brother *vis-à-vis* his sister's sons within the segmenting lineage. The different sorority-groups within the matrilineage are held together through the authority of the mother's brother. This coercive force is undermined by the attempts of the wardens of the various sorority-groups to break away and form new villages of their own. In this way the segmentation and differentiation of the matrilineage is really a facet of the general political process in which groups are for ever trying at once to demonstrate their automony by setting up new villages, and their unity by remaining in large integrated villages. Conflicts between sister's sons and mother's brothers, therefore, are common.[1] For a typical example we need not go outside the village that I have chosen to illustrate the localized matrilineage.

Ali Kasunka (C6) fell out with his mother's sister's daughter's son Mwanace (D10). The trouble started when Ali Kasunka who had married the sister of the cook came to live uxorilocally in Chiwalo's area. While in Zomba he had asked Mwanace to come to live virilocally in his village to keep things in order. It soon became apparent that the women were not satisfied with Mwanace and every time that Ali Kasunka visited them they had tales to tell of his failure to keep the peace. Ali Kasunka then decided that he would move his village from Zomba area to Chiwalo's where he was married, so that he could stay married to his wife in Chiwalo's area and keep control over the village. Soon after the change had taken place the infant daughter (E15) of Biti Mtemula (D19) became ill and died. Ali Kasunka went to the diviner with Adusoni, the child's father's marriage surety, to establish the cause of the death. The diviner indicated that it was the sorcery of Mwanace. Ali Kasunka took no action on this at all, but he remembered it. Some time later he himself became ill and this time his sisters Asausyeje (C8) and Biti Kasembe (C5) went to the diviner. Once again he indicated that Mwanace was responsible because he was jealous of Ali Kasunka's authority in the village. Tension increased when the husband of Biti Sale (D15), Wzyison, became ill. His wife immediately went to tell

[1] In 31 village splits involving matrilineal relatives, 9 hinged on MB-ZS conflicts.

2: Mitchell E-5 (1946-1949) 1956 FT7 Yao FT7

604 578 Mwanace. He was the junior marriage surety to the marriage and it was his duty to go to the man's marriage surety, report the matter and arrange to take some action to get the man well again. Mwanace, however, refused to take any action. Instead he tauntingly said, 'Take the matter to Ali Kasunka, it is his village.' The woman did so, and Ali Kasunka asked immediately whether she had not taken the matter to Mwanace. She replied that she had and repeated Mwanace's words. Ali Kasunka took the matter up with Mwanace who now objected to being ordered about. Ali Kasunka, however, impressed on Mwanace that the village was his (Ali Kasunka's) and the authority rested with him. He then went to the man's home to tell them of Wayison's illness. The man's representative came and he and Ali Kasunka consulted a diviner. They found that the man was ill from *ndaka*, which he had contracted in his home village. They found medicine and treated him and he recovered.

604 578 833 787 684 Things came to a head in 1947. Mwanace's younger sister Nyangu II (D11) was married to a soldier who was away. One morning she came to her mother's elder sister, Mbalasyao (C1),[1] and told her that she had found semen on her pudenda and could not recall having had intercourse with anyone. Mbalasyao told Ali Kasunka about this. It was clearly a matter for divination and Ali Kasunka called Mwanace and told him that they ought to consult a diviner. But Mwanace's attitude, even in such a crisis as this, was hostile. He refused and said it was not his work to do this sort of thing. Ali Kasunka therefore went to a diviner with his sister Mbalasyao. The diviner said the semen was Mwanace's. He said that he had entered her hut magically and had sexual intercourse with her without her knowing it.[2] When Ali Kasunka got back to the village he called Mwanace and asked him what tricks he was playing in the village. Mwanace said that he had done nothing—it was not his village. Ali Kasunka then vaguely hinted at his crime. Mwanace pressed for more details and Ali Kasunka accused him outright of sleeping with his sister. He had hardly uttered the accusation before Mwanace had drawn a knife and attacked him. Mwanace was screaming something to the effect that Ali Kasunka had come to him with lies about having seen a diviner. Ali Kasunka beat off the attack and reiterated the accusation. Mwanace now turned his rage upon the woman and tried to catch her. Two of the men in the village then caught Mwanace and subdued

[1] Her mother, Amaliama, was dead.

[2] This is called *cipumerya*. It combines the use of magic with sister-incest. [835] To the Yao mind there could be no clearer proof of sorcery. I have already mentioned the importance of sister-incest in relationship to the beliefs surrounding the sorority-group. See p. 146.

2: Mitchell E-5 (1946-1949) 1956 FT7 Yao FT7

him. The woman in the meantime had run to Chiwalo's hut half a mile away. Here she complained to the chief that Mwanace wanted to kill her. Chiwalo refused to listen to her complaint and sent for Ali Kasunka. When he had come and explained the sequence of events, he continued saying that he would like to take the case to court. Chiwalo, who was Ali Kasunka's wife's father's sister's son (hence a classificatory younger brother) and whose henchman Ali Kasunka was, refused to arbitrate in the case but referred it to Kawinga. On the day of the case the woman's husband came back from the Army. The case was tried and eventually the court assessors awarded a damages claim of £3 to be paid by Mwanace to his sister. The husband, at the same time, said that he could not remain married to her because whenever he saw her he would think that she had slept with her brother and in court he gave Ali Kasunka a marriage termination payment. The tension between Ali Kasunka and his 'sister's son' did not end there however. When they got back to the village Ali Kasunka remonstrated with Mwanace saying, 'Are you not ashamed to have married your sister?' Mwanace said that he could not stand that sort of thing and went back to live uxorilocally.

A crucial point in this case history is that the women did not like Mwanace. Almost certainly there would have been a split in the village had the women had more confidence in Mwanace. The tension between Ali Kasunka and Mwanace, although the conflict is inter-generational, started, as it consistently does, from the relationships of a man to the women of his matrilineage. Without the support of the women, younger brothers or sister's sons are impotent against the power of their senior relatives. It is only when they can induce the women to follow them and to leave their rivals that they can found a new village and thereby begin to earn prestige. Therefore, although the men are the active agents in bringing about a physical act of fission, they are in fact only making manifest a situation which is latent within the lineage.

The position of the senior male matrilineal relative is of fundamental importance in questions involving segmentation. His position is seen most clearly in the dominant matrilineage, in which the name of the village is inherited. The Yao practise 'positional succession'. A man not only succeeds to his mother's brother's name but also to the position of the mother's brother in the social structure as a whole.[1] It follows that when the

[1] See Chap. V, p. 121.

593 The children of maternal uncles (C 6 and 8) and of paternal aunts (C 2 and 4) are
601 called cousins *ashaiwani* (sing. *naiwani*), and, conversely, the children of maternal aunts (C 7 and 9) and of paternal uncles (C 1 and 3) are called "brothers and sisters"; one would address the other as "*chamunk'*" or "*achimuna*," but either is whole to the other.

601 It is interesting, therefore, to note that cousinship is of two kinds: the relationship
605 between a child and his maternal aunts' children or his paternal uncles' children is *wanko*, whereas the relationship with his maternal uncles' children or his paternal aunts' children is *naiwani*.

[611] It is easily understood why the maternal aunts' children are considered as brothers and sisters, as among the Yao, matrilineal descent is the rule, the children taking the clan of

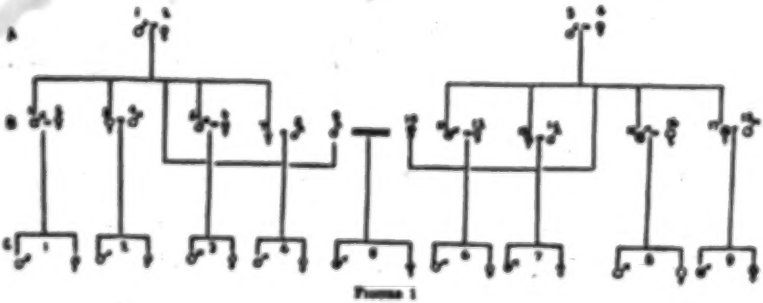

FIGURE 1

the mother. In the diagram, this is indicated in black. That the paternal uncles' children bear the same relationship would seem to indicate that matrilineal descent is not absolute but that dual descent from both parents is recognized.

Children C 5 may not marry C 7 and 9, nor C 1 and 3. In the case of the former, this is because persons of the same clan may not marry, but in the case of the latter, no such reason is given but they are simply said to be brothers and sisters. Children C 5 may
[582] marry their cousins C 6 and 8 and C 2 and 4, but this is not very common as it is said such marriages are always unhappy.

601 The wife of a maternal uncle (B 12) speaks of her nephew by marriage (C 5) as *mawo*,
604 husband, because, in the event of her husband's death, this nephew would inherit from him and he might marry the widow.

601 A parent-in-law or child-in-law is called *mkwapa* indifferently. Paternal and maternal grand-parents, and great-uncles and aunts are all called *ambuje*; a grand-child, *chimbulu*.

The words *atati* and *amao* commonly mean father and mother, but, as given above, there are other words for these two parents, whereas *atati* and *amao* are applied to certain aunts

1: Tew E-4 (no date) 1950 FT7 Yao FT7

621 every adult member is a matrilineal descendant of a single ancestress, or a spouse of
619 one of these people. All husbands are called *alamu* by the male members of the descent group, but husbands call each other by the kinship terms for older and younger
[601] brother (i.e. *acimmeni* or *mpwanga*) according to the seniority of their wives. Similarly undifferentiated in kinship terms are the wives of all men of the descent group, who call each other 'sister'.

591 The husband is expected to work in his wife's garden, to help his mother-in-law,
606 and also, in the early stages of marriage, to avoid her. His attitude to his father-in-law is one of respect, relaxing as time goes on. His attitude to his wife's brother is also one of respect, which covers feelings of latent hostility. Although husband and wife's brother co-operate in affairs relating to the woman and her children (e.g. they jointly consult the diviner in case of illness, and the brother-in-law hears grievances the husband may have against his wife), there are elements of conflict arising from their competition for the affection of the woman and her children.

591 Patrilocal marriages are the rule in certain cases. The village headman commonly
622 has his wife in his own village. At his death his widow may return to her own village,
613 but if her daughters have married locally she may stay, and one of her sons, as warden of his sisters, will also stay and marry patrilocally, as did his father, the headman.
621 Thus a new matrilineal descent group, linked to that of the headman by a patrilineal link, develops. In every generation the number of separate but related matrilineal descent groups would double, and at such a rate of proliferation it might be expected that any village would contain many family groups. In fact, however, most members of a village can trace their descent from a common ancestress removed not more than about five generations. There are two reasons for this degree of homogeneity in the kin-grouping in the villages. One is that the villages tend to split up as they become
[582] too large and complex. The other is that the introduction of a new matrilineal descent group is often avoided by a cross-cousin marriage by the headman of the village or the warden of a sorority group.

605 There is a joking-relationship between cross-cousins, that is, for example, between the village headman's children and his sisters' children. The latter, as members of his
582 descent group, have interests and loyalties opposed to those of his own children. Although there is a strong tradition of cross-cousin marriage, such marriages are said to be likely to be unstable.

Betrothal and Marriage

584 Child betrothal was common among the Yao. Acceptance of a loin-cloth and the wearing of it was token of betrothal, giving the groom exclusive rights over the girl.[1] The negotiations for an adult marriage are conducted by senior matrilineal kinsmen of the parties, who at the subsequent ceremony act as witnesses or sureties to the marriage. Usually the senior is the mother's brother, and the junior the brother. The
585 act of validation, the *Cingome* rite, takes place some time after the husband and wife have been living together. They meet in the hut of the woman for the rite, which consists in eating two pots of porridge, prepared by the female relatives of each party. The man's people bring a cockerel and the woman's a hen for relish. The exchange of food symbolizes the exchange of members of each matrilineal kin group, which is

[1] Macdonald, 1882, vol. i, p. 118; Johnston, 1897, pp. 411–13.

2: Mitchell E-5 (1946-1949) 1956 FT7 Yao FT7

the significance of this formulation of his position is clear. It is when he shows partiality that the village under him is likely to break up. If he sides with his children his matrilineal kin are almost sure to move out; if he sides with his matrilineal kin, his children are likely either to return to their matrilineal village or, if they are adult, split off to set up a village of their own. The situation is precarious for the headman and it is very difficult for him to avoid a split in the village if he cannot keep the two opposed groups at peace.

My investigations show that few villages have contained patrilaterally-linked groups through the lives of two village headmen, unless these groups were descended from slaves. When the headman dies his successor assumes his name and social rôle. He also assumes the position of father towards the remaining children, who are in fact his cross-cousins. But his relationship towards them is not the same as that of father to children. The intimate link of the blood tie has been lost and the relationship becomes formalized. As more and more headmen succeed the genealogical link between the patrilaterally-linked groups and the dominant matrilineage becomes more and more remote, and the relationship becomes more and more casual. What usually happens is that shortly after the death of the headman and father, the patrilaterally-linked group takes exception to what the new headman does or says and moves off to found a village of its own. The case history I quoted earlier [1] brought this out clearly. The new headman had had intercourse with the wives of his 'son'. The son complained to the arbitrators in the dispute that 'he should have been as a father to me, and he is not'. The result was that the son refused compensation, and moved out of the village with his sisters to build on his own. When this happens the father-son relationship between the two villages is preserved and perpetuated, but the link is entirely formal and co-operation between them is limited to mutual attendance at funerals.

Patrilaterally-linked Groups as the Legacy of Slavery

Slave-groups in a village are usually linked patrilaterally to the dominant lineage. This is because the headman who was usually the captor of the slaves kept the women as concubines. They were given quasi-child status in the village, so that their children

[1] 'The Split of Cikumba Village', see Chap. V, p. 127.

when I visited it in 1947.[1] The basic structure of this village is set out in Diagram 5. Here the headman[2] was the last surviving member of the dominant matrilineage. The founder of the village, his mother's brother, had thirteen slave concubines. Some of these were barren but others produced children to give this complex structure. In this village the 55 huts were arranged in 16 different affiliations. The details are set out in Table XXIX. These groups were held together by Mpumbe IV, old, blind and doddering as he was. The virtual leader of the village was his elder brother's son, a man in his late forties or early fifties. When Mpumbe died, late in 1948, the people said that it was because of the sorcery of his brother's son who wished to take over the name of the village. This led to a dispute, which ended in the brother's son's leaving to found a new village about 15 miles away. A distant sister's son, as I have said, succeeded to the headmanship, and the reduced village was reunited under this new leader. 567 613 621

However, this is an extremely unusual type of village as most villages, if they are not simple matrilineal groups, have only one patrilaterally-linked group living with them. The reasons for this are firstly, that if patrilaterally-linked matrilineages develop at all in the modern villages, they move out very soon after the death of their progenitor, and, secondly, that there are very few of the old slave-raiders' villages left intact.

Cross-cousin and Other Kinds of Intra-village Marriages

A most important factor in the welding of patrilaterally-linked groups to the dominant matrilineage is marriage. The tradition of cross-cousin marriage is very strong among the Yao. A person may marry either type of cross-cousin but in practice preference is given to a father's sister's daughter—i.e. the woman is married to her mother's brother's son. There is a special term for cross-cousins, *asiwani*, which is used by either male or female talking to either sex. Between cross-cousins, especially cross-sexually, there is a joking-relationship which may vary all the way from ribald joking to sexual advances. Some of my male informants say that sexual intercourse may take place between cross-cousins 582 601 605

[1] See also Chap. VI, p. 161, and Chap. III, p. 59.

[2] He died late in 1948 and was succeeded by a distant 'sister's son' from the village of his perpetual son, Ngongondo.

[text continues on p. 199]

2: Mitchell E-5 (1946-1949) 1956 FT7 Yao FT7

'if the women are stupid enough to allow it'. The kinship terminology is consistent with the assumption that every man marries his cross-cousin, except that the father's sister's husband is not called 'father-in-law', but 'father'. The mother's brother's wife is called *akwegwe* (parent-in-law). The husband of a cross-cousin is called *mpwao* (younger brother), on the reasoning that if a man does not marry his cross-cousin, then his younger brother will. Dr. Meredith Sanderson told me that it was once the custom for a man to ask a prospective wife's cross-cousin before he proposed marriage because it was assumed that the woman's cross-cousin had first right to her hand. As far as I could ascertain this politeness is no longer observed.

The children of cross-cousins are called 'my children'. In addition to this a person calls his mother's mother's brother's son or mother's father's sister's son, 'father', and his mother's mother's brother's daughter or mother's father's sister's daughter, 'female father', a term which he applies also to his father's sister.

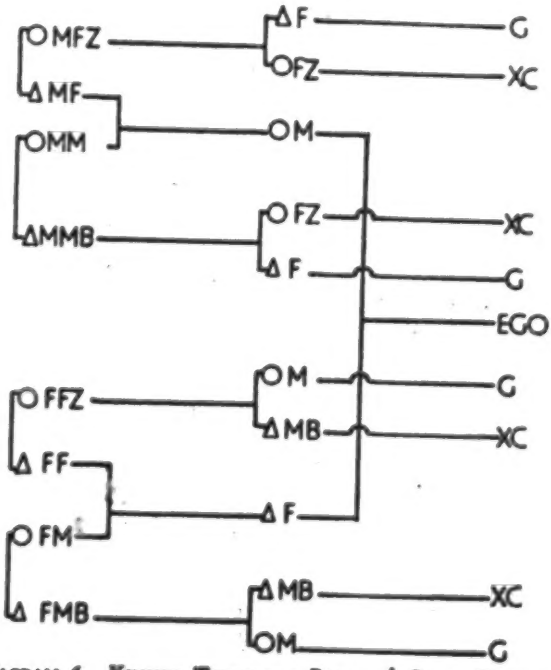

DIAGRAM 6. KINSHIP TERMS FOR PARENTS' CROSS-COUSINS.

2: Mitchell E-5 (1946-1949) 1956 FT7 Yao FT7

601 A person calls his father's mother's brother's daughter and father's
605 father's sister's daughter, 'mother'; his father's mother's brother's son or his father's father's sister's son, 'mother's brother'. Diagram 6 illustrates this. This is consistent with the assumption that each parent has married his cross-cousin.

582 Conversation with informants gives the impression that cross-cousin marriages are very common. They say, for example, that every man's first marriage ought to be to his cross-cousin. But in fact, of 103 first marriages, only 15 per cent were to real or classificatory cross-cousins, though 21 per cent were to other types of kinsmen. Marriages to other types of kinsmen are loosely called cross-cousin marriages, and often what has been called a cross-cousin marriage in conversation turns out to be marriage to a cross-cousin's daughter or something similar. This may be the reason why casual conversation leads one to imagine that cross-cousin marriage is so frequent.

601 But cross-cousinship is particularly significant when seen in
605 relation to village structure. Typically, villages, if they are not built around a simple matrilineage, are composed of a dominant
613 matrilineage and one or more lineages linked patrilaterally to it. Sometimes there are groups in a village which are connected by a patrilateral link to a matrilineage which is in turn linked patrilaterally to the dominant lineage. In other words, there are some lineages connected by a double patrilateral link to the dominant lineage. But this is not common. These linked groups have arisen because one or more of the men of the dominant lineage have brought their wives to live in their village. The set of kinship terms applied to members of the linked lineage by members of the dominant lineage are shown in Diagram 7. We have already seen that Ego, whether man or woman, calls his or her mother's mother's brother's son or daughter 'father' or 'female father'. This usage is consistent with the assumption that one's mother ought to have married her mother's brother's son so that the mother's maternal uncle's son should be called 'father'. On the same reasoning, one's mother's mother's brother's daughter should be one's father's sister and the appropriate term 'female father' is accordingly applied. Because uxorilocal marriage is the custom, Ego's mother's mother's brother's son marries out of the village and his children belong to another lineage. The children of Ego's mother's mother's

2: Mitchell E-5 (1946-1949) 1956 FT7 Yao FT7

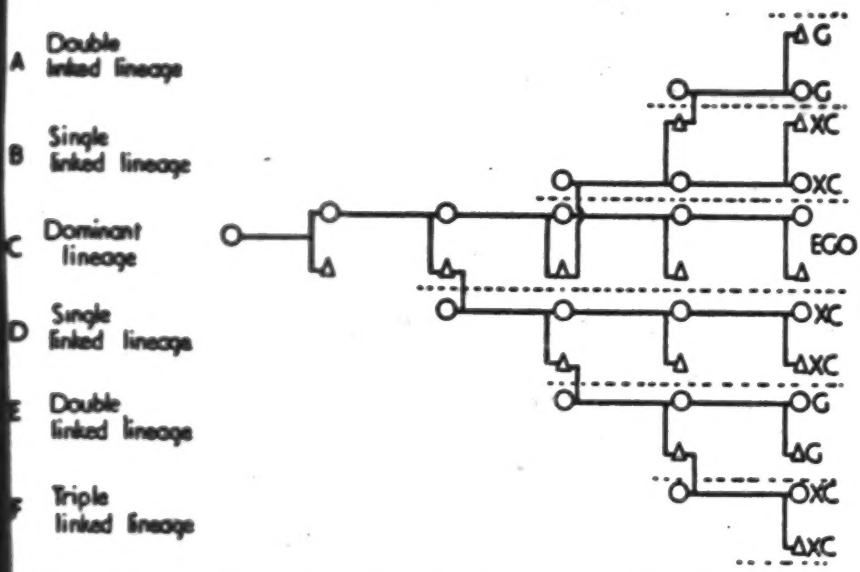

601
605
613

DIAGRAM 7. KINSHIP TERMS BETWEEN DOMINANT LINEAGE AND PATRILATERALLY-LINKED GROUPS.

brother's daughter, however, are members of the linked lineage and they are called 'cross-cousin' by Ego and members of the dominant lineage in Ego's generation. The children of 'cross-cousins' are called 'my children'. Hence, Ego and those in his generation in the dominant lineage call all those in the first descending generation in the linked lineage 'my children'.

I have used as an example a lineage which is linked to Ego's lineage through his mother's mother's brother. But the kinship terminology is unaltered if the link occurs in any ascending generation. In Diagram 7 I have set out the kinship terms applied by the dominant lineage to members in the linked lineage where the connection is through Ego's mother's mother's mother's brother.

The argument would run as follows:

	Ego's MM	calls	Ego's MMMBD cross-cousin.
Therefore	Ego's M	calls	Ego's MMMBD female father;
therefore	Ego's M	calls	Ego's MMMBDD cross-cousin;
therefore	Ego	calls	Ego's MMMBDD female father;
therefore	Ego	calls	Ego's MMMBDDD cross-cousin.

601 To Ego therefore, in a lineage linked through one patrilateral link:

685 Any person in the first ascending generation is 'father' or
613 'female father'.
Any person in the same generation is 'cross-cousin'.
Any person in the first descending generation is 'child'.

Those in the second ascending generation are called 'grandparent' and those in the second descending generation are called 'grandchildren'. By the merging of alternate generations, those in the second ascending and second descending generation may also be called 'cross-cousin'.

Where the subsidiary lineage is connected to the dominant lineage through two patrilateral links the kinship terms for siblings is applied to Ego's generation. In Diagram 7 the linked lineage marked A is connected to the dominant lineage through Ego's MMBS. Ego calls his mother's mother's brother's son 'father' and, therefore, calls his mother's mother's brother's sons' children by the appropriate sibling terms.

If a subsidiary lineage were connected through three patrilateral links the kinship nomenclature would be the same as if there were only one link. Lineages connected to dominant lineages through two or more patrilateral links are very rare. Most subsidiary lineages are connected through one patrilateral link only. In any village the generation differences between members of dominant and subsidiary lineages tend to be obscured. The Yao tend to see the component lineages as wholes, and therefore speak of the relationships between members of the dominant lineage and members of the subsidiary lineages in general as 'cross-cousinship' (*cisuwani*). It is only in special situations that the exact relationship becomes important.

605 The pattern of behaviour between cross-cousins is consistent
578 with this view of their rôles in the make-up of a village. In the
621 typical Yao village there are two or three groups who are united in their extra-village affairs but opposed in internal relationships. Their hostility to each other comes to the surface at the slightest provocation, but they are, nevertheless, co-villagers. They are kin and yet not kin, because the Yao look upon kinship as primarily matrilineal. They talk of the link through the father as 'not proper kinship'. The hostility between the members of the different cross-cousin groups in the village is dissipated

2: Mitchell E-5 (1946-1949) 1956 FT7 Yao FT7

in a joking-relationship which is more intense between men and women. Men and women in Yao public life always behave distantly to each other; hence joking-relationships are most intense between male and female cross-cousins. The joking-relationships between cross-cousins of the same sex is much more subdued and limited. The village headman himself, if he is not the actual father of the cross-cousins, is likely to be the butt of most of this. His visits to the huts of his cross-cousins to give them irksome instructions is an especial occasion for this sort of joking. Cikoja ordered his female cross-cousins to sweep a site for my tent when I first went to his village. I was most embarrassed by the insults that were hurled at his head during this procedure, but he took it all calmly and said nothing. The hostility inherent in the headman–villager relationship, together with the opposition between the dominant matrilineage and the patrilaterally-linked groups, provided an opportunity *par excellence* for joking. Thus the joking between cross-cousins in the village context is a means whereby the hostility between the component groups is dissipated and the harmony within the village maintained.

The groups are, of course, welded more closely by cross-cousin marriages which are not only allowed but prescribed. By cross-cousin marriage a man from one of the component groups of the village may marry and yet not leave the village. He may in fact have to build a hut in another part of the village, but this is obviously not the separation that uxorilocal marriage entails. At the same time, in a village where the headmen have married their cross-cousins, there will be fewer patrilaterally-linked groups, so that the village will be less complex and consequently less liable to internal dissension. If cross-cousin marriages were not practised, and if the children of the headmen and senior members of the linked lineages did not return to their matrilineal villages on the death of one of their parents, the intra-village situation could in time become extremely complex. Assuming that each linked group had at least one male member married virilocally, the number of related groups would double itself in each generation.[1] However, because of limiting economic factors I describe later and the disruptive social processes within villages, this situation never occurs in practice, and Yao villages on the whole remain relatively simple in structure.

[1] See detailed argument and diagram in *Seven Tribes*, 333.

593 The children of maternal uncles (C 6 and 8) and of paternal aunts (C 2 and 4) are
601 called cousins *achaniwani* (sing. *waiwani*), and, conversely, the children of maternal aunts (C 7 and 9) and of paternal uncles (C 1 and 3) are called "brothers and sisters"; one would address the other as "*chemwali*" or "*achimwene*," but either is *mbale* to the other.

601 It is interesting, therefore, to note that cousinship is of two kinds: the relationship
605 between a child and his maternal aunts' children or his paternal uncles' children is *wanke*, whereas the relationship with his maternal uncles' children or his paternal aunts' children is *uniwani*.

[611] It is easily understood why the maternal aunts' children are considered as brothers and sisters, as among the Yao, matrilineal descent is the rule, the children taking the clan of

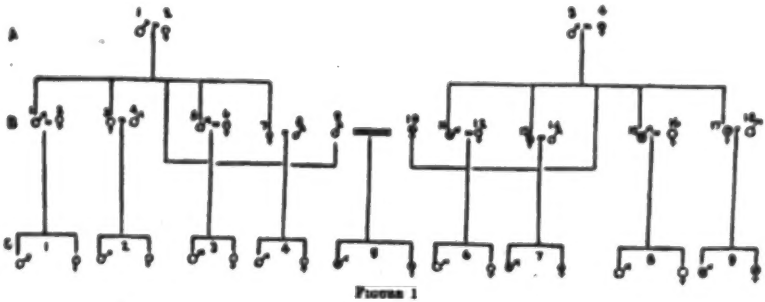

FIGURE 1

the mother. In the diagram, this is indicated in black. That the paternal uncles' children bear the same relationship would seem to indicate that matrilineal descent is not absolute but that dual descent from both parents is recognized.

Children C 5 may not marry C 7 and 9, nor C 1 and 3. In the case of the former, this is because persons of the same clan may not marry, but in the case of the latter, no such reason is given but they are simply said to be brothers and sisters. Children C 5 may
[582] marry their cousins C 6 and 8 and C 2 and 4, but this is not very common as it is said such marriages are always unhappy.

601 The wife of a maternal uncle (B 12) speaks of her nephew by marriage (C 5) as *msono*,
604 husband, because, in the event of her husband's death, this nephew would inherit from him and he might marry the widow.

601 A parent-in-law or child-in-law is called *mkweyue* indifferently. Paternal and maternal grand-parents, and great-uncles and aunts are all called *ambuje;* a grand-child, *chizukulu*.

The words *atati* and *amao* commonly mean father and mother, but, as given above, there are other words for these two parents, whereas *atati* and *amao* are applied to certain aunts

3: Stannus D-5 (ca. 1912) 1922 FT7 Yao FT7

Witch-medicine. The making of medicine against people has been shown to occupy an essential place in *usesi*, and it plays an important part in all occultism. So by insensible grades, the ordinary use of drugs in common diseases is reached, though it is probable that very much greater faith is placed in a packet of burnt roots put under the floor of the house than in the efficacy of any concoction taken by mouth. 754 [757]

There is a general belief that by medicine extra ability verging into supernatural power can be acquired. This power in a general sense is represented by the word *ukoma* and a man so possessed is spoken of as *mundu ;na komala*. The desire for increased power may be a perfectly natural one, such as a desire for influence and popularity as a chief, or on the other hand, the power of *usesi* may be aimed at, or again, the knowledge of magic medicine for thieving or for any other practice. *Ukoma* is, therefore, a relative matter. The necessary medicine or initiation into the understanding of magic can be purchased from persons already practitioners, the honest herbalist merging by imperceptible degrees into the most criminal witch-doctor. A single practitioner may prescribe a charcoal dressing for an ulcer, exorcise an evil spirit by a vapor bath, sell medicine to enable the buyer to win a case at court, arrange medicine on a pathway to act as a selective love potion, or prescribe a drug to change a man into a lion. 756 787 791

Deserving of special mention are the people who thieve by the aid of medicine which they have either purchased or prepared themselves. Such a man is called *chitaka* and the medicine *utela wa chitaka*. The active principle of this medicine is said to be prepared from the tail of a hyaena, an animal which is said to be able to enter a house where people are sleeping and kill and carry off the fowls without waking the occupants. The medicine is often carried in a hyaena's tail. The *chitaka* is supposed to approach the house he would rob and chewing some medicine in the mouth, gently blow towards it to put everyone to sleep. The door is supposed to unfasten itself and the thief is free to take what he wishes. He is even said to kill, cook, and eat food in the house while the inmates remain unconscious. A special characteristic of the *chitaka* is that whatever he lays his hands on in the house he must remove, though he does not want it, so that in the morning many unwieldy, useless objects may be found outside the hut. 791 789

There are many other magic medicines. One of these, *luunga*, if introduced into a village, will cause the illness and death of some inmate. Anyone handling the body of the sick man or the corpse after death, sickens and dies until the whole village is wiped out. There is a man serving a life sentence now at the Central Prison, Zomba, who was convicted of having caused the death of many people in a village in Angoniland. He is said cheerfully to have admitted the power of his medicine. 754

Medicine made from a cousin is supposed to be efficacious in various ways. The blood of a cousin is instilled into the ear for otorrhoea. Drinking the water which has been used by a cousin to wash his face relieves intestinal colic. Medicine is made from the hairs of the beard of a cousin or from an *ubile* and used for chest trouble. 757 605

genous group, in which his jurisdiction over one part of the village arises from his position as the warden of a sorority-group, and that which he exercises over the other sorority-group derives partly from his position as a non-matrilineal relative and partly from his own personal qualities. The warden of the second sorority-group is the headman's own son and it is he who takes over all the functions proper to that position, but the successor to the headmanship is a man's sister's son, usually, though not invariably, the first-born son of the eldest sister. Each village headman in turn brings his wife to live in his village and each headman's wife in turn tends to set up a fresh group which is of a different lineage affiliation from that of the headman. In addition to this the warden of the sorority-group formed from the first headman's children tends in due course to live patrilocally and the children of his wife set up yet another foreign group in the village. Hence, theoretically, with each generation the number of opposed groups in a village doubles itself, and in a few generations, were this to continue, the position would become extremely complex. In fact a village of long standing is seen to be composed of a central lineage group to which the headman belongs, and a series of other lineage groups related to the headman's lineage group through one or other of the past and present headmen of that village. Such groups of different lineage make-up are usually mutually opposed and are held together only by the combined influences of a weak patrilineal connexion with the headman's lineage and the personality of the present headman.

This situation is clearly an uneasy one for the headman. His wife is looked upon as a stranger and is often made to feel it. The headman's sorority-group often expresses its hostility and jealousy towards her. The children of the two groups are on no easier terms. They call each other ' cross-cousin ' (*asiwani*) and are expected to marry one another. At the same time the hostility between them is formulated in joking relationships. This critical situation of the headman is made clear to him on the day of his succession. One headman was told: ' As you have got wives, do not listen to what they say. They may be lying. Sometimes they will quarrel with your sisters and say that your sisters have been insulting you. This is false. When you hear these reports you may be unfair to your sisters and the people will say that you have broken your village through listening to nonsense.' Thus when conflicts arise between members of a village the headman is in a peculiar position and it is difficult for him to remain impartial. In such a situation the tendency is to call in an outsider to try to settle the differences. Sometimes these differences are patched up and the village continues as a unit. But, particularly after the death of the first village headman, the tendency is for one of the groups to move away to a completely new area, there to set up a unit of its own.

I quote an actual case to illustrate this procedure:

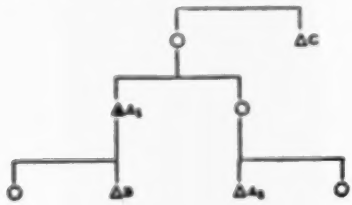

1: Tew E-4 (no date) 1950 FT7 Yao FT7

621 every adult member is a matrilineal descendant of a single ancestress, or a spouse of
619 one of these people. All husbands are called *alamu* by the male members of the descent group, but husbands call each other by the kinship terms for older and younger
[601] brother (i.e. *acimwemi* or *mpwanga*) according to the seniority of their wives. Similarly undifferentiated in kinship terms are the wives of all men of the descent group, who call each other 'sister'.

591 The husband is expected to work in his wife's garden, to help his mother-in-law,
606 and also, in the early stages of marriage, to avoid her. His attitude to his father-in-law is one of respect, relaxing as time goes on. His attitude to his wife's brother is also one of respect, which covers feelings of latent hostility. Although husband and wife's brother co-operate in affairs relating to the woman and her children (e.g. they jointly consult the diviner in case of illness, and the brother-in-law hears grievances the husband may have against his wife), there are elements of conflict arising from their competition for the affection of the woman and her children.

591 Patrilocal marriages are the rule in certain cases. The village headman commonly
622 has his wife in his own village. At his death his widow may return to her own village,
613 but if her daughters have married locally she may stay, and one of her sons, as warden
621 of his sisters, will also stay and marry patrilocally, as did his father, the headman. Thus a new matrilineal descent group, linked to that of the headman by a patrilineal link, develops. In every generation the number of separate but related matrilineal descent groups would double, and at such a rate of proliferation it might be expected that any village would contain many family groups. In fact, however, most members of a village can trace their descent from a common ancestress removed not more than about five generations. There are two reasons for this degree of homogeneity in the kin-grouping in the villages. One is that the villages tend to split up as they become
[582] too large and complex. The other is that the introduction of a new matrilineal descent group is often avoided by a cross-cousin marriage by the headman of the village or the warden of a sorority group.

605 There is a joking-relationship between cross-cousins, that is, for example, between the village headman's children and his sisters' children. The latter, as members of his
582 descent group, have interests and loyalties opposed to those of his own children. Although there is a strong tradition of cross-cousin marriage, such marriages are said to be likely to be unstable.

Betrothal and Marriage

584 Child betrothal was common among the Yao. Acceptance of a loin-cloth and the wearing of it was token of betrothal, giving the groom exclusive rights over the girl.[1] The negotiations for an adult marriage are conducted by senior matrilineal kinsmen of the parties, who at the subsequent ceremony act as witnesses or sureties to the marriage. Usually the senior is the mother's brother, and the junior the brother. The
585 act of validation, the *Cingoma* rite, takes place some time after the husband and wife have been living together. They meet in the hut of the woman for the rite, which consists in eating two pots of porridge, prepared by the female relatives of each party. The man's people bring a cockerel and the woman's a hen for relish. The exchange of food symbolizes the exchange of members of each matrilineal kin group, which is

[1] Macdonald, 1882, vol. i, p. 128; Johnston, 1897, pp. 411–13.

2: Mitchell E-5 (1946-1949) 1956 FT7 Yao FT7

CHAPTER VII

THE PATRILATERALLY-LINKED GROUPS

The Position of the Husband and Father

MATRILINEAL descent provides the principle on which the smallest of villages, the hamlets, are organized. But not all villages are made up of huts owned by members of one matrilineage as in Ali Kasunka's village.[1] Most villages in fact have a more complex internal organization which may be epitomized as a dominant matrilineage which carries the village headmanship, and a number of subsidiary lineages linked to the dominant lineage by various means. The most common of these is the patrilateral link whereby the subsidiary lineage is connected to the dominant lineage through one of its men.[2] The subsidiary lineage develops in the village from the matrilineal descendants of the virilocally-married wife of one of the men of the dominant lineage, so that the subsidiary lineage, initially at least, are the 'children' of one of the men of the headman's matrilineage. Their peculiar position in the village must be seen in the light of the general position of the father in Yao society.

The father, obviously enough, is also a son-in-law; obvious as this may seem in English it is charged with meaning for the Yao. When parents-in-law refer to their daughters' husbands they use the term *akwegwe*; and they in turn are called this by their sons-in-law. But the *akamwini* are essentially men who are living uxorilocally and *ukamwini* is the general status of being a man in uxorilocal marriage. *Mkamwini* thus cannot be translated into English without periphrasis and I translate it merely as 'husband'. I emphasize, however, that whenever I speak of *husbands* or the *husband* in general I mean 'husbands in uxorilocal marriage'. The Yao assume that marriages as a rule are uxorilocal. Usually the young husband builds a house in his wife's village and is expected to live there for the rest of his life. But

[1] See Chap. VI, pp. 140–3.

[2] I have called this type of village structure the 'thorp' in my earlier essay, 'The Yao of Southern Nyasaland', *Seven Tribes*, 332 ff.

2: Mitchell E-5 (1946-1949) 1956 FT7 Yao FT7

he cannot escape the fact that in his wife's village he is only a 'billy goat' and that his 'true home' is in his matrilineal village. The pull of the matrilineal village on him, therefore, is always very strong and he is constantly trying to return there. His wife's responsible relatives are constantly trying to avoid this because they know that in time they are likely to lose the children who will probably settle in their father's village if they grow up there. In general, therefore, a husband must have a very good reason before he can get his wife's kinsmen's permission to take her and her children to his village. His wife's relatives do not easily yield. But a headman must live in his own village so that nearly all headmen bring at least one of their wives into their villages. Other men sometimes succeed in doing so especially if their wives are past child-bearing, but it is typically the headman's wife who lives virilocally.

The husband's interest in returning to his matrilineal village is heightened by the fact that a man in his wife's village is looked upon as the typical man without prestige: a stranger, whose duty is largely procreative. The theme song at the installation ceremony where the husband was compared with a billy goat, and the common epithet 'chicken rooster' for a husband, reflect the attitude of the Yao towards him. In the song I quoted, the husband was said to be unable to climb high in his village of marriage, however rich he may become.[1] He is, nevertheless, an essential member of the village and the Yao say that it can succeed neither economically nor physically without his aid.

A husband becomes more important when he stays in a village for a long time. He becomes known intimately to the villagers and is conversant with their affairs. He is, therefore, able to advise on many private intra-lineage and intra-village affairs and may even become a marriage surety if there is no more suitable person available. Also in time the husband's position in the village changes. As his children grow up and become active members in the matrilineage, his position of husband becomes supplanted by his position of father, which, in a matrilineal society like that of the Yao, is significant in the same way as that of the mother's brother is in patrilineal societies.

The Yao recognize the close bond between father and child. This bond is conceived to be both social and physical and is

[1] See Chap. V, p. 119.

3:Stanner D-5 (ca. 1912) 1922 FT7 Yao FT7

The hair of the axilla is always removed in men and women, usually by shaving but sometimes in the case of women it is dealt with as in the case of the pubic hair. A man with unshaven axillae would be laughed at and referred to as "a man carrying a fowl in his armpit." The axillary hairs are called *mundenge pa mungwenge* (*ngwenge*, the armpit). 302

The pubic hair, *mundenge*, is removed by both men and women; in men by shaving, in women sometimes by shaving, but preferably by plucking out after the application of a medicine called *mnemundenge* (*ku-mne*, to pluck a fowl), which renders the operation easy. It is prepared from the juice which exudes from the bruised bark of the *mne-mundenge* tree. There is a woman at Malemya's who has never grown any axillary or pubic hair; she is called "the rogue elephant"; a rogue elephant has no tusks. It may be noted in passing that the woman has borne children. [124]

A few men have the hair round the anus shaved. Such a service can only be asked of a man's closest intimate, such as a brother-in-law. [607]

I have dealt with tattooing among the Yao in an article, as yet unpublished, on tattooing among the natives of Nyasaland.

The teeth among the Yao proper are never mutilated in any way, though the Amangoche go in for small file marks at the cutting edges of the incisors. 304

The old Yao women, of whom some may still be seen, used to pierce the upper lip and wear a circular disc of wood often two inches in diameter in the hole; this is called *lupelele* (Pl. VII, fig. 4). The disc was often made of lead and sometimes of ivory. The lead might be hollowed out on the upper surface; it was then called *lupelele lua ulali*. The disc caused a considerable projection of the upper lip which was much admired. A man, on the other hand, with protruding lips would be nicknamed "the warthog," *nanungulu*, and considered ill favored. 304 301 [332]

This *lupelele* fashion has gone out and of later years the *chipini* or disc worn in the left ala of the nose has become more and more fashionable (Pl. II, fig. 2). Originally the *chipini* consisted of a small disc of lead not larger than a three-penny piece, which lay on the outer surface of the ala, held in place by a stem, *lushinji*, which pierced the ala and passed into the nostril. Now the fashion is to wear a very large disc, often an inch in diameter, which itself occupies a hole in the substance of the ala of the nose; it may be flat-topped and called *chipini cha utenge* ("mushroom"), or the upper surface may often be concave, in which case it is called *chipini cha utali* (*litali*, a grain mortar). These disks are made of lead and are sometimes called *kilini*, a recent word and doubtless a corruption of "lead." Others are made of ivory, which may bear some geometric pattern on the exposed surface. A *chipini* used to cost a fowl.

Among Yao men and women, the lobule of the ear is often pierced but nothing is worn in the hole except possibly a stalk of grass.

Combs for use and for ornament are worn in the hair by both men and women. The ordinary comb without decoration is called *lilumudenge*; it is made of a number of pieces 301

2: Mitchell E-5 (1946-1949) 1956 FT7 Yao FT7

the significance of this formulation of his position is clear. It is when he shows partiality that the village under him is likely to break up. If he sides with his children his matrilineal kin are almost sure to move out; if he sides with his matrilineal kin, his children are likely either to return to their matrilineal village or, if they are adult, split off to set up a village of their own. The situation is precarious for the headman and it is very difficult for him to avoid a split in the village if he cannot keep the two opposed groups at peace.

My investigations show that few villages have contained patrilaterally-linked groups through the lives of two village headmen, unless these groups were descended from slaves. When the headman dies his successor assumes his name and social rôle. He also assumes the position of father towards the remaining children, who are in fact his cross-cousins. But his relationship towards them is not the same as that of father to children. The intimate link of the blood tie has been lost and the relationship becomes formalized. As more and more headmen succeed the genealogical link between the patrilaterally-linked groups and the dominant matrilineage becomes more and more remote, and the relationship becomes more and more casual. What usually happens is that shortly after the death of the headman and father, the patrilaterally-linked group takes exception to what the new headman does or says and moves off to found a village of its own. The case history I quoted earlier [1] brought this out clearly. The new headman had had intercourse with the wives of his 'son'. The son complained to the arbitrators in the dispute that 'he should have been as a father to me, and he is not'. The result was that the son refused compensation, and moved out of the village with his sisters to build on his own. When this happens the father-son relationship between the two villages is preserved and perpetuated, but the link is entirely formal and co-operation between them is limited to mutual attendance at funerals.

Patrilaterally-linked Groups as the Legacy of Slavery

Slave-groups in a village are usually linked patrilaterally to the dominant lineage. This is because the headman who was usually the captor of the slaves kept the women as concubines. They were given quasi-child status in the village, so that their children

[1] 'The Split of Cikumba Village', see Chap. V, p. 127.

567 were called *yisikulu* (grandchildren) by the headman, who in turn
613 was called *ambuje* (grandparent or master) by the slaves. The
621 grandchild–grandparent relationship became fused with the
[608] master–slave relationship as the use of the term *ambuje* for master suggests. The slave descendants as a rule have no relatives in the neighbourhood. The Yao always redeemed uterine kin whom they found in slavery by replacing them with other slaves, usually taken or bought from the Nyanja, Ngoni or Bisa. Where there are slave-groups in a village to-day, they have frequently been bought or captured in distant places, so that their kinsmen have been unable to trace them. How much this

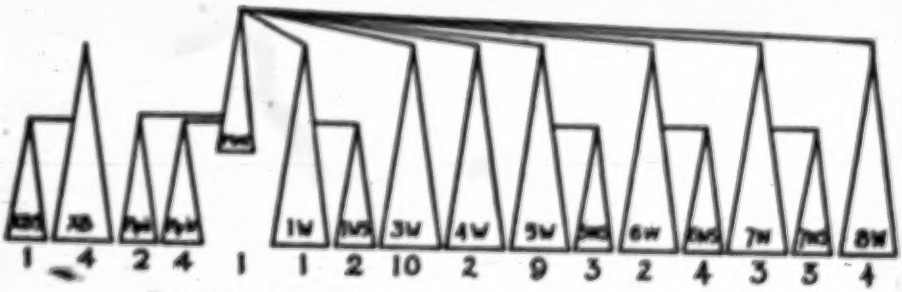

Diagram 5. The Ownership of Huts in Mpumbe Village.

has prevented slave-groups from leaving Yao villages I cannot say. Certainly before the White conquest members of a slave-group could only leave their captor's village at the risk of death. But after the White conquest it seems that many of the slave-groups left to set up their own villages. Many, on the other hand, no doubt for personal reasons, stayed with their captors in their villages, and are there to-day. In Cikoja's village, for example, there are six of these groups. Some are not very large, but only 20 of the 46 huts are owned by members of the dominant matrilineage who are not married to descendants of slaves. Eight are owned by members of the dominant matrilineage who have married slave descendants, and the remainder, 18 huts, are owned by members of the slave-groups who have married outsiders. This is a typical distribution of hut ownership. At one extreme is the pure matrilineal village such as Ali Kasunka's and at the other is the village in which the dominant lineage is barely represented. A village of this type was Mpumbe

881
533
539

"Anambokopi ukuulu, pempe pakata!"
"You mbin dandi, everything (is) lovely!"

Next comes *chambolo*, the ferry. There is no image but two posts represent the ferry; the *m'mikilu* stands on one side of the two posts with his two assistants opposite him, one holding a bunch of leaves, the other a burning log: the first fans the log of the second, using leaves as bellows, while the *m'mikilu* sings:

"Ngumbo, ngumbo, kujikututa, ngumbo!"
"The female pudendum, where it pushes itself!"

after which the *usuli* one by one are pushed through between the two assistants. *Chambolo* signifies the passage from one part of the ceremony to another; here, from the *ingapo* to *ching'undung'undu*. *Ku-jambolo* = to cross a stream.

As they reach *ching'undung'undu* the *m'mikilu* sings:

"Ching'undung'undu nalilumbile jingawe ngwe jakupenkula wulimuka!"
"Ching'undung'undu I have marked out if it were ollen *distinctive of chiefs!"*

One of his assistants is told to go and get a pot of beer. When it is brought he sings:

"Anamali, kanumbu, nawile kunyuma!"
"You girl, little fly, wash your hands behind you!"

881
533
539
608

This is the sign for the woman who volunteers for the service to the leader, to come forward, followed in turn, as each *mumli* is dealt with, by other women. The woman stands back to back with her *mumli* and they hold hands, while the *m'mikilu* comes and pours a little beer on their hands; they make movements as of washing the hands and then separate, the woman rejoining the crowd, the boy standing to one side until all have performed the rite. This woman ever afterwards is treated by the *mumli* as his adopted sister. After this, each *nkumwai* takes his *mumli* into the bush near by and holding the boy's cloth over the lad's head, he waits there for the boy's relatives to come and redeem him with fees. It is a point of honor that as many relatives as possible shall turn out to show that the boy is much liked, this being, of course, so much the better for the *nkumwai* who gets a present from each. The *nkumwai* then uncover the boys' faces and hand over the lads to their mothers who take them away to rest in the shelters.

The *m'mikilu*, meantime, has withdrawn to his hut, where all the relatives later collect; he then comes out holding his "tail," singing:

"Kwenda ninjinje ukwenengwe kupa!"
"Come and bathe those who love to bathe!"

Each adopted sister or woman guardian takes her *mumli* brother on her back and carries him off to the stream to bathe. The woman sets her *mumli* down on the bank and then leans across his back while the *m'mikilu* comes along and dipping his "tail" into the

3: Stanous D-5 (ca. 1912) 1922 FT7 Yao FT7

stream, sprinkles the boy on the chest with the water. Then the positions are reversed and the woman receives the "tail" on her chest, after which they plunge into the water and bathe, each pouring water over the other. The woman rubs the boy's back and he in turn shyly rubs the back of his woman guardian. Clothes are not removed. Everyone looks on. 881 533 539 608

While this is going on, the *m'michila* and his assistants build a kind of fence across the return road; as the people start back, he sings:

"*Mato wangu*	*akuzuma*	*nawayuo*	*wakumko masaka!*"
"Fire my	they are buying	I myself	they give me the spirits!"

that is "everyone has got to buy from me the gifts I myself have from the spirits." As each woman comes up carrying her *mseli*, the mother runs out and makes a payment to the *m'michila* so that her son may be allowed to pass. The boys are carried back to the shelters where they rest. The mother of the leader cooks food into which the *m'michila* puts medicine; he then gives some to each *mseli* to eat, after which they partake of the food prepared by their mothers, while the *m'michila* goes to the village for the beer drinking, returning in the afternoon. In the interval the dancing men dance *chamba*, etc. 881

Oil standing in separate basins on the ground has previously been prepared for anointing the *wali*. The *m'michila* takes each basin and passes it across the palm of his hand on which he has smeared medicine, each basin being set down on the ground again. Taking a stick, he smears it with medicine from his "tail," and he dips it into each basin. He then comes with his "tail" to detect any woman who may have had any sexual intercourse instead of remaining continent during the stay at *Ndapala*. He dips his "tail" into each basin of oil in turn and holds it up for the oil to run off. If the oil runs off in a stream, the mother as she stands behind her basin of oil is welcomed as a good mother; if the oil runs off drop by drop, "*ndoli*," the woman is laughed to scorn. Her basin is changed for that of another woman or her oil is thrown away and some from another basin is put in its place so that no harm shall result to the boy.

The *akuwasi* then take the boys into the bush near by. The *magajawias* dress is removed, the body anointed with the oil, and fresh bark-cloth dyed black is put on. Little bows and arrows are made of small branches and grass and with these the *wali* shoot as they again enter *Lupanda*, putting the bows down on *ching'undang'unda* to the trilling of all the women present.

Immediately after this, the return is made to the village, just after sunset, the women having been busy gathering up all their belongings, while the boys were being anointed.

Some of the assistants lead the procession, the *wali* following in single file, all much subdued and walking very slowly, dressed in the new bark-cloth round the loins, with many ropes of beads round the neck and body, a headband of bark, and down the back a string of beads to which is attached a tassel. Each carries in his hand a wand about five feet long, *ngongo*, with a pattern burned in the shaft and two rattles, *masuw*, affixed at the upper end. 301 293

Y 614 Y [582] (*mtundu*, or among the Ngoni and the Nyanja influenced by them, *mfumba*),—say the Mwales'. His father is of another clan—as likely as not the Milanzis'—for it is considered incest for two Mwales to marry. He will tell you that he addresses every Mwale he meets, even a stranger from a far village, as "brother, sister, father, mother", (*achimwene*, *chemwali*, *atate*, *amai*) according to age and sex, and feels obliged to offer them help and hospitality—although this feeling is in most parts dying out. The Milanzis of his own generation whom he meets he considers in the same way as his cousins, (*asuwani*), and treats, or used to treat, with the same friendly familiarity as his real cross-cousins at his father's home village.

Y [608] [609]

This extension of brotherhood to one's mother's, and cousinship to one's father's, whole clan, suggests that the Nyanja clans (into which possibly the Yao married) may have grown each out of an extended family group, (*mbumba*), living or travelling together. Cross-cousin marriage would follow naturally on friendship between two such nearby groups, for after a few generations of intermarriage the groups would become so connected that a man born into the one and marrying into the other would in actuality be marrying his cross-cousin. Moreover there is a tradition, at least among the Nyanja of Zomba District, which bears out the evidence of the relationship terms. Old people tell how the earliest leaders of their tribe entered the country, each surrounded by his *mbumba*, and settled first here then there ; they explain how each group came to be named, and how lasting friendship arose between the Amwale under Chief Mpoto and the Amilanzi under Chief Saima, and similarly between the Apiri and the Ankhoma, the Ambewe and the Achanza. Whatever truth lies behind this tradition, it is certain that to-day, however scattered the clans may be and however generally the young men reject cross-cousin marriage, yet a Mwale still calls "cousin" every Milanzi he meets and treats their women as potential mates ; and the same holds good between the Phiri and Nkhoma, Mbewe and Chanza clans.

M 174 614 [602] M [582] M [173] M 177 601 582 614

MARAVI FR 4

(*mtundu*, or among the Ngoni and the Nyanja influenced by them, *m/umba*),—say the Mwales'. His father is of another clan—as likely as not the Milanzis'—for it is considered incest for two Mwales to marry. He will tell you that he addresses every Mwale he meets, even a stranger from a far village, as "brother, sister, father, mother", (*achimwene*, *chemwali*, *atate*, *amai*) according to age and sex, and feels obliged to offer them help and hospitality—although this feeling is in most parts dying out. The Milanzis of his own generation whom he meets he considers in the same way as his cousins, (*asuwani*), and treats, or used to treat, with the same friendly familiarity as his real cross-cousins at his father's home village.

This extension of brotherhood to one's mother's, and cousinship to one's father's, whole clan, suggests that the Nyanja clans (into which possibly the Yao married) may have grown each out of an extended family group, (*mbumba*), living or travelling together. Cross-cousin marriage would follow naturally on friendship between two such nearby groups, for after a few generations of intermarriage the groups would become so connected that a man born into the one and marrying into the other would in actuality be marrying his cross-cousin. Moreover there is a tradition, at least among the Nyanja of Zomba District, which bears out the evidence of the relationship terms. Old people tell how the earliest leaders of their tribe entered the country, each surrounded by his *mbumba*, and settled first here then there ; they explain how each group came to be named, and how lasting friendship arose between the Amwale under Chief Mpoto and the Amilanzi under Chief Saima, and similarly between the Apiri and the Ankhoma, the Ambewe and the Achanza. Whatever truth lies behind this tradition, it is certain that to-day, however scattered the clans may be and however generally the young men reject cross-cousin marriage, yet a Mwale still calls "cousin" every Milanzi he meets and treats their women as potential mates ; and the same holds good between the Phiri and Nkhoma, Mbewe and Chanza clans.

6: Mitchell E-5 (1946-1947) 1949 FT7 Yao FT7

IT SHOULD
162 be noted that only 27—11 per cent. of the whole sample of 246 women—had never
589 married and that 23, 80 per cent., of these (or 10 per cent. of the total) were under the age of 20 and therefore stood a good chance of yet marrying. Furthermore, 2 of the 4 women over 20 who had not married were known definitely to be incapable of marrying (one is insane and the other has violent epileptic fits).

There were 53 women who were divorcees or widows (21·5 per cent.), but it should be noted that 27 (or 11 per cent. of the 246 women) were over the age of 45 and therefore were past, or nearly past, the child-bearing period. Those in the younger age-groups stood good chances of remarrying. Table IV shows that though
[586] the divorce rate is high[1] remarriage is common. By the time a woman's child-
[587] bearing period has ended she has been married on the average 1·7 times. Few marriages are contracted after child-bearing ceases.

TABLE IV. *Marriages and Dissolutions of Marriage experienced by all Women over the Age of 13*

162
586
587

Present age	*No. of women*	*No. of marriages contracted*	*No. of divorces experienced*	*No. widowed*	*No. still married*	*No. of marriages per woman*	*No. of divorces per woman*	*No. of marriages per woman ended by death of husband*	*No. of marriages per woman still existing*
13–20	45	22	1	..	21	0·49	0·02	0·00	0·46
20–30	79	104	36	4	64	1·32	0·45	0·05	0·81
30–45	70	121	50	16	55	1·73	0·71	0·23	0·79
Over 45	52	88	29	34	25	1·70	0·57	0·65	0·48
Total	246	335	116	54	165	1·36	0·47	0·22	0·67

842 These statistics, showing the early age of marriage, the early commencement of child-bearing, the high incidence of marriage among women, and the high rate of remarriage during the child-bearing period, all point to the high valuation of
[182] reproduction reflected in Yao culture. This is consistent with their social structure,
[61] where the major corporate groups are kinship groups and reproduction is the principal method of recruitment to the group. Furthermore, because the standard of living is almost at subsistence level, children do not entail the economic losses
[593] they do in Western society. On the other hand, they are expected to support their
[888] aged parents when they themselves are economically independent. In other words, there are few factors militating against reproduction and many in favour of it.

554 We may expect the beliefs and customs surrounding child-birth to reflect the value
884 of reproduction. For instance, the Yao distinguish clearly between women who have
[182] borne children and those who have not. When a girl becomes pregnant for the
[842] first time she undergoes a special ceremony (*litiśo*) attended only by women who
[843] have borne children. This ceremony has many of the features of a *rite de passage* and appears to mark the passing of the woman to a new social status. Furthermore, women are ascribed status according to the number of children they have borne. The word *anwali* signifies a young woman who has not yet borne a child; *anwali*

[1] Between a third and a half of the marriages contracted by women had been dissolved by divorce by the time that the child-bearing period had ended.

1: Tew E-4 (no date) 1950 FT7 Yao FT7

342 Yao make square houses.[1] Panelled doors and glass windows, deck-chairs and palm
177 furniture are becoming more and more popular. The men wear long Moslem robes
[291] and the women are clothed in cotton. In the rural areas there are usually a few crafts-
men who still ply their trades as carpenters and blacksmiths, though the latter no
326 longer smelt, but use scrap-iron.

Labour Migration

162 Statistics are not available for the Yao of Portuguese East Africa or Tanganyika
464 Territory. Yao constitute 34 per cent. of the total population of South Nyasa district, 15 per cent. of upper Shire, 11 per cent. of Blantyre and Zomba.[2] The proportion of labour migrants in these districts was in 1937 as follows:[3]

District	*Adult males fit to work*	*Percentage of emigrants*	*Number producing economic crops*	*Number of subsistence producers*	*Emigrants not heard of since 1930*
South Nyasa .	24,230	27·1	2,912 (12%)	12,025 (49%)	873
Upper Shire .	24,673	15·9	2,555 (10%)	16,629 (67%)	255
Blantyre . .	25,330	15·6	3,788 (15%)	10,165 (40%)	986
Zomba . .	26,679	12·4	7,720 (29%)	9,040 (33%)	553

[134] South Nyasa district, which is unfertile waterless bush with a long history of famine and food shortage, has the highest proportion of labour migrants. Upper Shire, though not fertile, is more prosperous, benefiting from the tobacco- and cotton-growing industries, and from the dried-fish trade.[4]

SOCIAL ORGANIZATION AND POLITICAL STRUCTURE[5]

Kinship and Local Grouping

611 Among the Yao succession is matrilineal and marriage mainly matrilocal. Accord-
[591] ing to some informants succession formerly passed down the line of brothers, as with the Bemba, but it now passes direct to the eldest sister's eldest son, or to descendants of other sisters in order of seniority.[6] Chiefly succession follows the same rule, but the most senior may be set aside for a more suitable candidate.[7]

611 Clan names, *lukoryo*, are inherited matrilineally, and formerly designated exogamous
614 units,[8] but the marriage prohibition has now ceased to operate. Holders of the same clan name are unable to trace descent from a common ancestress, and for commoners clan names seem to have quite lost their significance; they are, however, carefully remembered in the chiefly lines and in other lines of hereditary rank, such as village headmen.

614 Within the general kinship grouping of the clan, a smaller group is recognized,
613

[1] Werner, 1906, p. 144; Macdonald, 1882, vol. i, pp. 20–2, describes a round hut.

[2] 1931 Census information is taken because the district boundaries were changed between 1931 and 1945, so that the information in the 1945 Census would not be susceptible of comparison with that given in the 1937 Survey of Male Adult Population in the *Bell Report*, Appendix A.

[3] *Bell Report*, 1938, Appendix A.

[4] Smith, 1937.

[5] Information, unless otherwise stated, is from Mitchell, and relates to south Nyasaland Yao.

[6] Johnston, 1897, p. 471; Meredith Sanderson, 1920, p. 370. Cf. Macdonald, 1882, vol. i, p. 187, who says that brothers inherit before sister's son.

[7] Ibid., p. 189.

[8] Stannus, 4, 1922, p. 236.

631 Matipwiri, etc.), displaced them southwards and so established
643 chiefdoms of their own. Mkumba moved to the south and
175 Nkata set up a fortress on Mount Mangoche, from which vantage-point he resisted British conquest for many years. Kawinga and Liwonde, whose clan-name was also *ambewe*, had moved in with Nkata but continued across the Shire River to settle in the Kongwe Hills to the west of Lake Malombe. Later, Kawinga and Liwonde re-crossed the Shire and moved south-eastwards until they reached Mount Chikala. This in the meantime had been occupied by Malemia. Kawinga and Liwonde succeeded in dislodging Malemia who retired to the Malosa Range, where he is situated to-day. Liwonde then left the mountain to settle on the east shore of the Shire River.

631 The arrangement of these particular chiefdoms in Administra-
643 tive districts therefore reflects the social relationships among the chiefs. Between Malemia and the two *ambewe* chiefs, Kawinga and Liwonde, there is an uninhabited forest reserve and a mountain range. Liwonde and Kawinga who can trace their descent
[61] matrilineally from a common ancestress and who are to-day perpetual [1] brothers, together with their minor chiefs, share the Liwonde district. In spite of the opposition of these two chiefs which arises from their position as chiefs of independent chiefdoms, they sometimes meet and visit each other. Chiwalo, who from the Administrative point of view is under Kawinga, is in fact more closely related to Liwonde and has much more to do with him. But Chiwalo's headmen usually appeal to Kawinga, not Liwonde, in their difficulties. Within Kawinga's area at a funeral or an installation ceremony of an important headman in the northern areas, representatives of the nearby chieftaincies Ngokwe, Chikweo, Chiwalo and Kawinga will be present. In the south, the representatives of only Chamba, Mposa and Kawinga are likely to be present. Headmen, if they come from Liwonde's area, do so because of kinship connection and not because they are representatives of Liwonde.

The relationships of Jalasi and to some extent Nyambi, with Kawinga and Liwonde, are much more distant. Kawinga and Liwonde stand opposed to Jalasi in spite of the fact that Jalasi shares their clan-name. I have never known of Jalasi coming to visit Kawinga or Liwonde. Jalasi's area extends well down

[1] i.e. the offices are fixed perpetually in this relationship. See p. 122.

2: Mitchell E-5 (1946-1949) 1956 FT7 Yao FT7

riages between the chiefs and Newcomers and as a result there are 3·9 per cent of the Newcomer headmen who are linked affinally to the chiefs. The proportion of affinally-linked headmen in the two categories is approximately the same. The major differences are among the proportions of headmen linked by matrilineal and patrilateral ties to the chief.

Clanship with the Chief

A more numerous category is those who are related to the chief, not by common descent but by clanship.

Informants tell me that before the Whites came to Nyasaland, each person took the clan-name of his mother. People who had the same clan-name were said to be ' of one kind ' (*lukosyo lwamo*). The word *lukosyo* had no other meaning but ' kind ' or ' sort ', and the word *mtundu* is frequently used as a synonym. If a man is asked his *lukosyo*, he is as likely as not to give the reply ' Yao ' or ' Machinga ', i.e. his tribal origin. By extension it follows that if two people have the same clan-name inherited from their mothers, and their mothers in turn have inherited it from their mothers, and so on, eventually there must be a common ancestress. The two people therefore call each other ' brother '. However, among the Yao there are no stories of the origin of clans and only vague traditions of a common clan ancestress. I often questioned Yao about their clan-names and joked with them that though they were Invaders they shared the same clan-names as their subjects. The clan-names I found among the Machinga Yao were *apiri*, *amilasi*, *ambewe*, *abanda*, *asimbiri*, *amwale*, *angoma*, and these clan-names also appear among the Marawi group of tribes (Cewa, Manja, Cipeta, Mbo, etc.), the Lakeside Tonga of Chinteche district, and the Mpotola and Lomwe or Nguru from Portuguese East Africa. The Achisi Yao under Katuli, a group related to the Mataka Yao from Portuguese East Africa, do not have these clan-names, nor, as far as I know do the Yao in Tanganyika. Clan-names, therefore, may be a feature of the Machinga Yao in Nyasaland, acquired as a result of their contact with the Marawi and other indigenous peoples of that country. It is significant that the clan-names are not as a rule common Yao words for everyday objects in the same way that clan-names amongst, say, the Bemba of Northern Rhodesia, are names of plants, animals and other natural phenomena. The word

2: Mitchell E-5 (1946-1949) 1956 FT7 Yao FT7

622 *amilasi* is used for bamboos and once an informant when pressed
643 told me a tale of a group of people who in dire starvation ate
614 bamboo leaves and were thenceforth called after the bamboos. This story, however, was discredited by others and I pass it off as unimportant. There is, however, some evidence that the words *apiri amilasi*, *ambewe* and so on, are commonly used in Nyanja, and possibly amongst the Lakeside Tonga who were once part of the Marawi peoples, for objects other than clan-names.

614 Informants say that people with the same clan-name could not
582 marry in the past,[1] so that the clan appears to have had the characteristics of an exogamous descent group. The position to-day is vastly different. Not only do people take the clan-names of their fathers, but many young people do not even know their clan-names at all.

614 At this point I should make it clear that the modern confusion
611 about clan-names is no doubt partly due to the emphasis placed
567 on patrilineal descent by the purveyors of White culture, the Administrators and the Missionaries, and also by the same emphasis in Islamic tradition which has influenced most Yao groups. Another factor in the situation is that slave descent still markedly affects social relationships in modern Nyasaland. Its significance here is that when a man took a slave-wife in the old days, his children by her took his clan-name, and not hers. Patrilineal descent of the clan-name therefore tends to point to the slave origin of a person. People who are able to point to a freeman ancestry are proud of this fact and are proud to be able to claim a clan-name associated with a long line of matrilineal ancestors, particularly if there were some well-known men among them. On the other hand, I found it a fairly safe indication that, if I could find no information about an ancestress, particularly her clan-name, then I was dealing with a group descended from a slave. A third factor is that some people
614 explained their lack of knowledge of a clan-name by the state
611 of social unrest and confusion at the end of the last century. As a result of the incursions of the Ngoni, Nguru and slave-raiding Yao and Arab groups, and finally the punitive expeditions of the British and the Portuguese, villages were destroyed and groups annihilated. People lost contact with their relatives, even

[1] Confirmed by Hynde, R. S., 'Marriage and relationship among the Yao', *Nyasa News*, vii (1895), 217-18.

2: Mitchell E-5 (1946-1949) 1956 FT7 Yao FT7

their parents. Therefore many people who were children then, but adult to-day, say that their parents were 'lost running from the wars' and that they were never told their clan-names.

Whatever are the factors which have led to the comparative lack of importance of the clan-name in the social relationships of commoners to-day, the clan-name has preserved its significance in the political structure. I have already said that the clan-names associated with particular village headmanships and chieftaincies are well remembered, and this fact is not without significance. It seems likely that the clan-name was used in earlier times by groups as a method of claiming protection. The same set of clan-names appears throughout the tribes which surround the Machinga Yao. It seems likely that the adoption of clan-names facilitated their incursion into the country, and it is certain that insurgent Yao groups have used the clan-name as excuses to move into an area, and gradually to extend their dominance over it.

For example, in Malemia's area there is an Nyanja village headman called Nyani, who has the clan-name *amwale*. Stannus reports that when Malemia moved into this area he claimed brotherhood with Nyani because of the clan-name, and was able to obtain from him the land extending from the Likwenu River to the Namadsi River, a district 30 to 40 miles long.[1] Again when Kawinga fled from Chikala after the British raids on it, he went to the land of Nkanyela, an Mpotola chief in Portuguese East Africa, who is also an *ambewe*. That the clan-name is used essentially in this political field is illustrated by the relationships of Mposa to Mbande. Mposa, the son of Kawinga I, settled in the country of the Nyanja chief Mbande, who had the same clan-name as Mposa, viz. *amilasi*. Mposa calls Mbande 'brother' to-day and Mbande holds a position of honour and rank in Mposa's chiefdom. It is significant that other village headmen such as Cilombo, Mbalika and Mkwinda also have the same clan-name, but they do not claim kinship to Mposa. In modern times, when there is no longer any great danger to be incurred in moving from one part of the country to another, it seems likely that the necessity for some mechanism, whereby the friendship of otherwise hostile groups could be secured, falls away. In other words, the significance of the clan-name is gradually disappearing as its functions atrophy.

[1] Stannus, 'The Wayao of Nyasaland', 237.

2: Mitchell E-5 (1946-1949) 1956 FT7 Yao FT7

CHAPTER VI

THE LINEAGE FRAMEWORK OF VILLAGES

Matrilineal Kinship

TO outsiders a village appears to be an undifferentiated whole and in interaction with other villages it acts as such. But within the village, social actions are determined by membership of kinship groups whose genealogical relationships to each other differ from one village to another. The village headman who represents the unity of the village is usually a kinsman of all the villagers, but the links to him are different and diverse. Yet he commands the leadership of the village, not so much by his kinship to the villagers, for a villager may have other mother's brothers and fathers in the village, but by his position in a political structure, where he represents the village to outsiders and to external authority.

Yao social groups are organized on a principle of matrilineal descent but we shall see that, although this is the main principle, it is modified by the general political mould into which villages are forced. We have already seen that, at least in the lines of important headmen, clan-names are inherited from the mother.[1] This is the simplest and most direct way in which matrilineal descent affects social relationships. The principle of matrilineal descent is far more important in organizing the smallest group which acts corporately within the village—the matrilineage.

A significant feature of Yao social structure is that the village organization tends to cut across lineages. In the process of segmentation of matrilineages, which I shall discuss in detail later, new villages are formed. When this happens the dissident kin usually set up their homesteads a good distance from the original or parent village. The links between different sections of the same matrilineage, therefore, tend to become lost, and the new village, conscious of its own identity and unity, gradually loses its links with the parent village. The general structural relationship between the villages as wholes, and their headmen as their representatives, is fixed at the time when the division takes place, and this is remembered. But the actual genealogical

[1] See Chap. III, p. 71.

2: Mitchell E-5 (1946-1949) 1956 FT7 Yao FT7

village but called it Mtuweni and not Mpumbe village. The positions of the lineages in the village would have become inverted, and the patrilaterally-linked lineage become the dominant lineage. In this way villages may change their name or they may acquire two names, as happened to Mlungu village in Nyambi's area. Here a man called Maalu took over the control of the village. He was the son of the previous Mlungu and the village is known to-day by either of these names. The interesting point is what will happen when he dies, because there are now sisters' sons in a distant lineage old enough to take charge of the village. The rule is, as we have seen, that the matrilineal relatives always have the first claim.

Paternity and Segmentation

It is interesting to note that the paternity of brothers or sisters is not a differentiating feature in these social relationships. In the discussions which have hinged upon the care of sorority-groups I have never heard the paternity of brothers and sisters brought up as a reason why they should hold more or less closely together. The father is important in social life as I point out later, but while groups may be linked through paternity, it does not lead to a second principle of segmentation within the lineage.[1] This is manifestly the result of the fundamental difference in a system of matrilineal descent, where paternity is of less consequence than maternity is in a patrilineal structure. Among the Yao, unlike the patrilineal peoples of Southern and Northern Africa, no marriage payments are made; divorce is easy and frequent, and there are no disputes about the custody of children, who always belong to their mother's group whether they are illegitimate or not.[2] This is consistent with the view of the husband as a mere begetter of children. Among the Yao, the

[1] This aspect of segmentation in patrilineal peoples, with different wives of men as points of fission, is brought out particularly in Evans-Pritchard, E. E., *The Nuer*, Oxford University Press (London, 1940), and *Marriage and the Family among the Nuer*, R.-L.I. Paper, No. 11 (1944); Fortes, M., *The Dynamics of Clanship*, and *The Web of Kinship*; Kuper, H., *A Black Aristocracy*, Oxford University Press (London, 1947).

[2] This has been worked out in Gluckman, M., 'Kinship and Marriage among the Lozi of Northern Rhodesia and the Zulu of Natal', in Radcliffe-Brown, A. R., and Forde, C. D. (eds.), *African Systems of Kinship and Marriage*, Oxford University Press for the International African Institute (London, 1950).

2: Mitchell E-5 (1946-1949) 1956 FT7 Yao FT7

593 sisters are the points of cleavage in the matrilineage and the
611 group of uterine sisters is seldom divided, unless their daughters are old enough to form a corporate group and to move off with their mother to found a new village under their brother.

The Spatial Representation of Lineage Segmentation

361 The segmentation of the matrilineage is also shown in the
613 spatial distribution of the huts in a village. The daughters of
621 the women of the matrilineage set up their huts near to their mothers', and as this continues over a number of years, the internal segmentation of the matrilineage is automatically reflected in the disposition of huts. Most Yao villages will show this spatial representation of social distance, some more clearly than others. The clearest example I have is in Mesi section of Majaja village, Nyambi's area. The disposition of the huts is set out in the village plan in Appendix C. Here are five fairly distinct groups of huts in the village. Four are descendants of four uterine sisters, the children of the previous Majaja. The space between these four groups is cleared and paths reticulate among the huts. About 200 yards away, the fifth group is out of sight of the others and must be reached by a path leading through the fields. In this cluster of huts live the children of the uterine brother of the four sisters. The matrilineal relatives of Majaja live about half a mile away in a quite distinct cluster.

In Cikoja village the same principles are at work but the situation is somewhat obscured by the number of patrilaterally-linked relatives. A glance at the village plan in Appendix D shows that the major segments, denoted by the symbols Ma and Mc in the plan, are quite distinct in the old village site, the huts of Ma being separated from those of Mc by a broad path and by a patch of bamboos. In the new village site across the stream the same general segmentation is shown where the two sections, Ma_1 and Ma_2, are separated by a path.[1] The separation of the clusters of huts is difficult to represent on a diagram because not only are the huts placed in discrete clusters, but they face in towards one another and the space between them is kept clean. Between the clusters there may be rubbish heaps and small garden patches. I describe later how the village continually

[1] I describe how this section of the village came to be across the river on p. 169.

589 Given of her married life begins. The man and woman live together peaceably enough as a rule, each attending to his own sphere of work. The man builds the house, the woman
962 sends the floors; she sweeps and cooks, she is the keeper of wood and drawer of water. The man hunts, fishes, makes mats, baskets, the grain store, game traps, and bark-cloth; he looks after the tobacco, and makes the snuff, while his wife brews the beer. He it is who fashions the gourd vessels and carves the spoons, while the woman is the potter (Pl. III, 4) and pipe-maker. Together they hoe and together they harvest, but to the woman falls the monotonous drudgery of pounding and sifting the corn for flour.

892 The Yao have a custom like that of the Anyanja. A sister brings to the house of the newly wedded pair a log of green wood from a mkanga tree which is very hard; the log
[522] may be two feet in diameter and four feet long. Should the bride not become pregnant before it is burned away, the husband is laughed at and they may both be teased by having
[558] many logs brought to the house. A man who has no children is much despised and there is a saying, "He must have eaten some ground-nuts," punning on the word for a thick-skinned variety of ground-nut, *chimbumbu*, a word which also means sterility. An impotent
[537] man may, with the consent of his wife, introduce some male friend into the house, any children born in consequence being claimed as the husband's. He usually chooses some friend from a distance to obviate any attachment springing up between him and the wife. Two married couples may, all consenting, exchange consorts for the night, but they never live together like this for long periods.

582 There is one well-defined marriage taboo; a man may not marry a woman of his own clan. In the old days, he was also restricted to his own tribe, except in the case of slave
[671] wives and wives by capture. Since the clan is inherited from the mother,[1] a man may not
[587] marry the daughters of his maternal aunts, but he may marry his other female cousins. He may not marry two sisters nor a deceased wife's sister; neither do two brothers marry two sisters.

595 The number of wives is limited only by the husband's ability to provide for them. In addition to free wives, a man might formerly have a number of slave wives. The head wife is called *Anapele*, the other wives, *mapumbu*. The word given by Macdonald, *ahwapele*,[2] meaning the junior wives, is a Chinyanja word and, I think, wrongly applied.

582 It has been said that a man always marries into the village of his wife. For this reason,
[592] female children are always prized as it means an increase in the number of able-bodied men added to the village. In rare cases, the wife might be taken to the husband's village,
[582] as is the Anyanja practice.[3] This, of course, is true in the case of chiefs and headmen. Here, we may also note that no payment is made for the wife and no dowry is received with her.

589 To revert to betrothal, occasionally the spouses will not agree to the marriage and a
893 runaway match takes place, but in the end, the marriage is usually regularized by the spouses coming to an agreement. If, however, the woman has in the meantime become

[1] Vide infra, p. [illegible]. [2] Op. cit., p. [illegible]. [3] Stanner, op. cit., p. [illegible].

593 601 The children of maternal uncles (C 6 and 8) and of paternal aunts (C 3 and 4) are called cousins sakwiwuni (dog, wuiwuni), and, conversely, the children of maternal aunts (C 7 and 9) and of paternal uncles (C 1 and 2) are called "brothers and sisters"; one would address the other as "chwanli" or "sakiwuno," but either is admissible to the other.

601 605 It is interesting, therefore, to note that cousinship is of two kinds: the relationship between a child and his maternal aunts' children or his paternal uncles' children is cousin, whereas the relationship with his maternal uncles' children or his paternal aunts' children is national.

[611] It is easily understood why the maternal aunts' children are considered as brothers and sisters, as among the Yao, matrilineal descent is the rule, the children taking the clan of

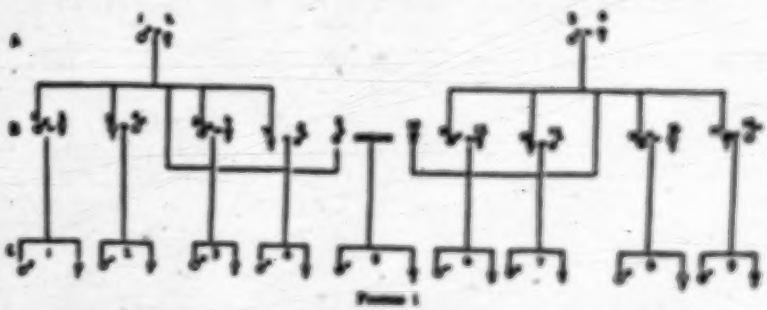

Pedigree 1

the mother. In the diagram, this is indicated in black. That the paternal uncles' children bear the same relationship would seem to indicate that matrilineal descent is not absolute but that dual descent from both parents is recognized.

Children C 5 may not marry C 7 and 9, nor C 1 and 2. In the case of the former, this is because persons of the same clan may not marry, but in the case of the latter, no such reason is given but they are simply said to be brothers and sisters. Children C 5 may [582] marry their cousins C 6 and 8 and C 3 and 4, but this is not very common as it is said such marriages are always unhappy.

601 604 The wife of a maternal uncle (B 12) speaks of her nephew by marriage (C 8) as mwaw, husband, because, in the event of her husband's death, this nephew would inherit from him and he might marry the widow.

601 A parent-in-law or child-in-law is called mkwapwe indifferently. Paternal and maternal grand-parents, and great-uncles and aunts are all called ambuje; a grand-child, chimbuda.

The words atati and amao commonly mean father and mother, but, as given above, there are other words for these two parents, whereas atati and amao are applied to certain aunts

[P. 141 8]

161 The people with whom this paper is concerned[1] occupy that part of Nyasaland between the Chikala Range in the South; Mount Mangoche in the North; the Shire River to the West; and the Portuguese East African border to the East. This area is represented on the accompanying diagrammatic map. A more detailed description of the general social organization of the Yao in this area, and of their history and general cultural background is to be published shortly.[2] At
361 this point it is sufficient to say that the Yao are semi-subsistence cultivators living in village settlements ranging from a few huts to sixty or more, with an average of about twelve. This represents say a population average of about 40 per village but ranging from 15 to over 200.
621 These village settlements are inhabited by groups of kinsmen. In general there is a matrilineal core
611 of kinsmen of whom the village headman, who
622 has the same name as the village, is one. In some more complex villages there are subsidiary matrilineages related to the matrilineal core agnatically

[P.141 C]

(62) through one or other incumbent of the position of village headman.* Succession to posts of autho-
●(61) rity, including that of the chief, is matrilineal.
(62) Ideally the succession should pass to the first-born son of a man's eldest sister, but this is not always followed, for the personal qualities of the successor are most important.

(61) The total African population of the area studied is 65,000. There are one or two Indian traders and two Europeans permanently resident in the area. One European is a missionary in the north-east corner and the other an Agricultural officer in the north centre of the area. Part of
(63) the area is administered by the District Commissioner, Zomba, and part by District Commissioner, Fort Johnston, and these officers tour the districts under their jurisdiction. Occasionally other White officials and labour recruiters appear, but in the main, Whites are not often seen in this
(49) area. The one road traversing it is usually impassable for a part of the rainy season.

ship. The difficulties of his position are brought home to the neophyte village headman in speeches made by old and experienced men. On one such occasion I heard a man say, 'Some men who marry into a village are bad and can split a village like this one by telling lies to the headman, saying that his sisters are talking behind his back and are insulting him. When a headman hears all this he might break his village by ill-treating his relatives, thus causing himself to be left all alone.' In this way the headman's responsibility for maintaining harmonious relations between the members of the village and himself is emphasised. His failure to do so results in what they call a break in the village—the departure of some of the members to live elsewhere—which is a severe blow to the status of the headman. In fact, he is dependent on his dependants for status, and the Yao are quick to point this out to neophyte headmen, saying, 'A tree cannot grow without branches.'

We can better understand the situation if we consider the social structure of the Yao village a little more closely. The Yao are a matrilineal people and are dominantly matrilocal. They live in small groups of huts scattered fairly evenly over the country and from a few hundred yards to possibly a mile or so apart. Such clusters may contain as few as five or as many as sixty or more huts, occupied by between 20 and 200 people.

These people are almost always kinsfolk, and in the smaller villages they are usually all either matrilineal descendants of a common ancestress or their spouses. In the larger groups there is a more complex situation which I shall analyse below. In the simpler groups there may be no male matrilineal descendant in the village and the leadership of the group is taken over by a senior female descendant of the founder of the village. Usually, however, if the group is large, one of the male matrilineal descendants lives patrilocally in the village and assumes leadership.

The relationship between a male matrilineal descendant and the female matrilineal descendants who are in his charge is signified by the word '*mbumba*'. The word particularly refers to the relationship between a man and his sisters and I have therefore translated it as 'sorority-group'. It includes a man's full sisters, matrilineal female collaterals (whom he calls sisters), their female children, and the female children of those female children, and so on. It is usually used in the sense of 'somebody's sorority-group'. A man belonging to the descent-group of the sorority-group may refer to these women as 'our sorority-group'. The man who is in charge of the sorority-group is referred to as the *ayaw mbumba*. This could be translated as 'owner of the sorority-group' but because of the property associations with the word 'owner' in our language, I have instead translated this as 'warden of the sorority-group' which expresses more accurately the relationship between a man and his female relatives. Even in those groups where there is a female in charge of the village and no male matrilineal descendant is resident in the group, there is usually some one man, possibly married in some other village, who is warden of the sorority-group. The warden of a sorority-group has certain precise duties to perform on behalf of his charges. First, he is concerned with the good relations between members of the sorority-group and with other such groups. He has to settle most of the domestic quarrels that take place between members of the sorority-groups. Second, and this is considered to be a most important function, he is the person who is the

marriage-surety for the marriages of the members of the group. Briefly this means that he must be approached before a marriage can be legally contracted by any member of his charge, he or his representative is present at the ceremony which formally announces the marriage, and he is responsible for the behaviour of his female relative in that marriage. Third, he is immediately concerned with the physical welfare and health of his sorority-group. He must track down the sorcerers causing their illnesses and supply the medicine to heal them. He has to arrange for the ritual purification of mourners after the death of one of the sorority-group's members. Fourth, he must be present in the court-house if one of his charges is involved in a case and he is usually looked to for the money for the fine. I have known a case not to begin because the warden of the sorority-group was not present. Frequently if the husbands of the female members of his charge default, he has to provide the hut-tax money.

Usually the warden of the sorority-group is the eldest brother of a group of adult full sisters. The younger brothers of the group of sisters, while concerned with their welfare, do not stand in this particular responsible position. They refer to the sorority-group as ' our sorority-group '. The elder brother refers to the sorority-group, be it noted, as ' my sorority-group ', and this sets him over and against his younger brothers. The position that the warden holds, however, is not rigidly fixed, for a younger brother may assume control of the sorority-group if for some reason he is dissatisfied with the way in which affairs are being conducted, and is able so to assert himself.

If we recall that the status of a man in a Yao community is determined by the number of dependants that he can command, it is easy to see that relationships between an elder brother and his younger brother are distinctive. The elder brother is responsible for the actions of his younger brother in much the same way as he is for one of his sorority-group, and the younger brothers have a great emotional attachment to their older brothers. Yet at the same time the elder brother stands in the way of the younger brother in his striving for status, in that while the elder brother is warden of the sorority-group the younger brother cannot be, and therefore cannot have dependants and status. It is not surprising to find that accusations of sorcery are frequently made between brothers and the result often is that the younger brother takes the sorority-group away from his sorcerer brother to some other place and sets up a new village with it. Therefore, one possible source of instability in a Yao village lies in the operation of the kinship system in a system of values which reckons status by adherents.

I have thus far been describing the simpler types of village. In the larger groups it is common for the warden of the sorority-group to live in the village where his sorority-group is. Then he usually brings one (or sometimes more) of his wives to the village, where she lives patrilocally. The daughters that are born to her do not return to the sorority-group from which the headman's wife came but marry and set up households near their mother in the village of their father. Thus there develops in time a second sorority-group in the village, alongside the first sorority-group, and related to it through the headman. At this point we may say that the man's position has changed from that of headman of a village containing a single sorority-group, to the more complicated and less secure one of village headman over a more hetero-

genous group, in which his jurisdiction over one part of the village arises from his position as the warden of a sorority-group, and that which he exercises over the other sorority-group derives partly from his position as a non-matrilineal relative and partly from his own personal qualities. The warden of the second sorority-group is the headman's own son and it is he who takes over all the functions proper to that position, but the successor to the headmanship is a man's sister's son, usually, though not invariably, the first-born son of the eldest sister. Each village headman in turn brings his wife to live in his village and each headman's wife in turn tends to set up a fresh group which is of a different lineage affiliation from that of the headman. In addition to this the warden of the sorority-group formed from the first headman's children tends in due course to live patrilocally and the children of his wife set up yet another foreign group in the village. Hence, theoretically, with each generation the number of opposed groups in a village doubles itself, and in a few generations, were this to continue, the position would become extremely complex. In fact a village of long standing is seen to be composed of a central lineage group to which the headman belongs, and a series of other lineage groups related to the headman's lineage group through one or other of the past and present headmen of that village. Such groups of different lineage make-up are usually mutually opposed and are held together only by the combined influences of a weak patrilineal connexion with the headman's lineage and the personality of the present headman.

This situation is clearly an uneasy one for the headman. His wife is looked upon as a stranger and is often made to feel it. The headman's sorority-group often expresses its hostility and jealousy towards her. The children of the two groups are on no easier terms. They call each other 'cross-cousin' (*asiwani*) and are expected to marry one another. At the same time the hostility between them is formulated in joking relationships. This critical situation of the headman is made clear to him on the day of his succession. One headman was told: 'As you have got wives, do not listen to what they say. They may be lying. Sometimes they will quarrel with your sisters and say that your sisters have been insulting you. This is false. When you hear these reports you may be unfair to your sisters and the people will say that you have broken your village through listening to nonsense.' Thus when conflicts arise between members of a village the headman is in a peculiar position and it is difficult for him to remain impartial. In such a situation the tendency is to call in an outsider to try to settle the differences. Sometimes these differences are patched up and the village continues as a unit. But, particularly after the death of the first village headman, the tendency is for one of the groups to move away to a completely new area, there to set up a unit of its own.

I quote an actual case to illustrate this procedure:

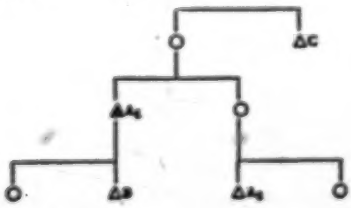

1: Tew E-4 (no date) 1950 FT7 Yao FT7

342 Yao make square houses.[1] Panelled doors and glass windows, deck-chairs and palm
177 furniture are becoming more and more popular. The men wear long Moslem robes
[291] and the women are clothed in cotton. In the rural areas there are usually a few crafts-
men who still ply their trades as carpenters and blacksmiths, though the latter no
326 longer smelt, but use scrap-iron.

Labour Migration

162 Statistics are not available for the Yao of Portuguese East Africa or Tanganyika
464 Territory. Yao constitute 34 per cent. of the total population of South Nyasa district, 15 per cent. of upper Shire, 11 per cent. of Blantyre and Zomba.[2] The proportion of labour migrants in these districts was in 1937 as follows:[3]

District	*Adult males fit to work*	*Percentage of emigrants*	*Number producing economic crops*	*Number of subsistence producers*	*Emigrants not heard of since 1930*
South Nyasa .	24,230	27·1	2,912 (12%)	12,025 (49%)	873
Upper Shire .	24,673	15·9	2,555 (10%)	16,629 (67%)	255
Blantyre . .	25,330	15·6	3,788 (15%)	10,165 (40%)	986
Zomba . .	26,679	12·4	7,720 (29%)	9,040 (33%)	553

[134] South Nyasa district, which is unfertile waterless bush with a long history of famine and food shortage, has the highest proportion of labour migrants. Upper Shire, though not fertile, is more prosperous, benefiting from the tobacco- and cotton-growing industries, and from the dried-fish trade.[4]

SOCIAL ORGANIZATION AND POLITICAL STRUCTURE[5]

Kinship and Local Grouping

611 Among the Yao succession is matrilineal and marriage mainly matrilocal. Accord-
[541] ing to some informants succession formerly passed down the line of brothers, as with the Bemba, but it now passes direct to the eldest sister's eldest son, or to descendants of other sisters in order of seniority.[6] Chiefly succession follows the same rule, but the most senior may be set aside for a more suitable candidate.[7]

611 Clan names, *lukuya*, are inherited matrilineally, and formerly designated exogamous
614 units,[8] but the marriage prohibition has now ceased to operate. Holders of the same clan name are unable to trace descent from a common ancestress, and for commoners clan names seem to have quite lost their significance; they are, however, carefully remembered in the chiefly lines and in other lines of hereditary rank, such as village headmen.

614 Within the general kinship grouping of the clan, a smaller group is recognized,
613

[1] Werner, 1906, p. 144; Macdonald, 1882, vol. i, pp. 20–2, describes a round hut.

[2] 1931 Census information is taken because the district boundaries were changed between 1931 and 1945, so that the information in the 1945 Census would not be susceptible of comparison with that given in the 1937 Survey of Male Adult Population in the *Bell Report*, Appendix A.

[3] *Bell Report*, 1938, Appendix A.

[4] Smith, 1937.

[5] Information, unless otherwise stated, is from Mitchell, and relates to south Nyasaland Yao.

[6] Johnston, 1897, p. 471; Meredith Sanderson, 1912, p. 370. Cf. Macdonald, 1882, vol. i, p. 187, who says that brothers inherit before sister's son.

[7] Ibid., p. 189.

[8] Sanderson, op. 1912, p. 256.

bébele (plur. *mabele*), a breast. This includes all who are supposed to be descended 614
from a common ancestress. Often the direct line of descent from the founding 613
ancestress is not known for more than three or four generations. The small groups
which can definitely claim to be 'of one breast' constitute the distinct matrilineal [621]
groups which live together in separate hamlets within a village. Each is undifferentiated
in relation to other matrilineal groups, but internally each is differentiated on the
principle of sibling unity.

The main emphasis of the kinship system is on the bond between a man and his 593
sisters. Their relationship is summed up in the word *mbumba* (translated by Mitchell
as 'sorority group'). A man speaking of his *mbumba* refers to all the women he calls 602
sister, their daughters, and their daughters' daughters. Strictly speaking, female kin
in the ascending generations are excluded, as belonging to the *mbumba* of his mother's
brother. The 'warden' of a sorority group, *aryene mbumba*, is the senior of the brothers
and is responsible for the behaviour of the women in his charge; he appears for them
in court and pays fines on their account. He plays an important part in the marriage
negotiations. It is his duty to consult the diviner if his sister or her child falls ill, and
to be chief mourner at the funeral of either of them, also providing medicine for the
ritual purification at the end of the mourning period. Formerly these obligations were
balanced by certain rights. He could sell some of them into slavery for his own
personal reasons. This privilège is ended, but even to-day it is through his sorority
group that a man achieves status and independence.

The principle of sibling unity is expressed in many other ways. A man and his 601
sister reciprocally call each other *alumbwangu*. More usually, a woman calls her 602
brother, older or younger than herself, *acimweni* (a term of respect usually applied to
a chief), for any brother may be regarded as warden of her sorority group. A man has
the same duties to his younger brothers as to his sisters, so they also call him *acimweni*,
but he calls them *mpwanga* 'younger brother', as they can never be in the position
of warden in relation to him. Maternal uncles are called *akwelume*, and a sister's
son *cipwa*.

Within each matrilineal descent group, differentiation takes place between members 602
according to whether they are siblings or not. A man's sorority group included ideally 593
his own siblings and their female matrilineal descendants. His sister's daughters are
also the sorority group of his sister's son, their brother, so that any woman can belong
at any one moment to the sorority groups of her brother, her mother's brother, her
mother's mother's brother, &c., but the effective one is that of her own brother, if
adult. He is consulted first in small disputes, and at the marriage ceremony each party
is represented by a brother as well as by a mother's brother. In the break-up of a
hamlet (described below, p. 12), siblings tend to hold together more closely than
cousins and to form groups of their own, so that each woman in the descent line is a
potential point of cleavage. Tension between brothers as they compete for control of [579]
the sorority group is a source of friction within the sibling group which eventually
leads to its disruption.

Since marriage is mainly matrilocal, and extra-village, the husband in his wife's 591
village is seen as a stranger by all the members of her matrilineal descent group.
There is a tendency for members of such descent groups to live together in a cluster 621
of huts. The word 'hamlet' is used by Mitchell to indicate a cluster of huts, in which 614

1: Tew E-4 (no date) 1950 FT7 Yao FT7

every adult member is a matrilineal descendant of a single ancestress, or a spouse of one of these people. All husbands are called *alamu* by the male members of the descent group, but husbands call each other by the kinship terms for older and younger brother (i.e. *acimmeni* or *mpwanga*) according to the seniority of their wives. Similarly undifferentiated in kinship terms are the wives of all men of the descent group, who call each other 'sister'.

The husband is expected to work in his wife's garden, to help his mother-in-law, and also, in the early stages of marriage, to avoid her. His attitude to his father-in-law is one of respect, relaxing as time goes on. His attitude to his wife's brother is also one of respect, which covers feelings of latent hostility. Although husband and wife's brother co-operate in affairs relating to the woman and her children (e.g. they jointly consult the diviner in case of illness, and the brother-in-law hears grievances the husband may have against his wife), there are elements of conflict arising from their competition for the affection of the woman and her children.

Patrilocal marriages are the rule in certain cases. The village headman commonly has his wife in his own village. At his death his widow may return to her own village, but if her daughters have married locally she may stay, and one of her sons, as warden of his sisters, will also stay and marry patrilocally, as did his father, the headman. Thus a new matrilineal descent group, linked to that of the headman by a patrilineal link, develops. In every generation the number of separate but related matrilineal descent groups would double, and at such a rate of proliferation it might be expected that any village would contain many family groups. In fact, however, most members of a village can trace their descent from a common ancestress removed not more than about five generations. There are two reasons for this degree of homogeneity in the kin-grouping in the villages. One is that the villages tend to split up as they become too large and complex. The other is that the introduction of a new matrilineal descent group is often avoided by a cross-cousin marriage by the headman of the village or the warden of a sorority group.

There is a joking-relationship between cross-cousins, that is, for example, between the village headman's children and his sisters' children. The latter, as members of his descent group, have interests and loyalties opposed to those of his own children. Although there is a strong tradition of cross-cousin marriage, such marriages are said to be likely to be unstable.

Betrothal and Marriage

Child betrothal was common among the Yao. Acceptance of a loin-cloth and the wearing of it was taken of betrothal, giving the groom exclusive rights over the girl.[1] The negotiations for an adult marriage are conducted by senior matrilineal kinsmen of the parties, who at the subsequent ceremony act as witnesses or sureties to the marriage. Usually the senior is the mother's brother, and the junior the brother. The act of validation, the *Cingonse* rite, takes place some time after the husband and wife have been living together. They meet in the hut of the woman for the rite, which consists in eating two pots of porridge, prepared by the female relatives of each party. The man's people bring a cockerel and the woman's a hen for relish. The exchange of food symbolizes the exchange of members of each matrilineal kin group, which is

[1] Macdonald, 1882, vol. i, p. 118; Johnston, 1897, pp. 411–13.

2: Mitchell E-5 (1946-1949) 1956 FT7 Yao FT7

CHAPTER VI

THE LINEAGE FRAMEWORK OF VILLAGES

Matrilineal Kinship

TO outsiders a village appears to be an undifferentiated whole and in interaction with other villages it acts as such. But within the village, social actions are determined by membership of kinship groups whose genealogical relationships to each other differ from one village to another. The village headman who represents the unity of the village is usually a kinsman of all the villagers, but the links to him are different and diverse. Yet he commands the leadership of the village, not so much by his kinship to the villagers, for a villager may have other mother's brothers and fathers in the village, but by his position in a political structure, where he represents the village to outsiders and to external authority. 621 622 571

Yao social groups are organized on a principle of matrilineal descent but we shall see that, although this is the main principle, it is modified by the general political mould into which villages are forced. We have already seen that, at least in the lines of important headmen, clan-names are inherited from the mother.[1] This is the simplest and most direct way in which matrilineal descent affects social relationships. The principle of matrilineal descent is far more important in organizing the smallest group which acts corporately within the village—the matrilineage. 611

A significant feature of Yao social structure is that the village organization tends to cut across lineages. In the process of segmentation of matrilineages, which I shall discuss in detail later, new villages are formed. When this happens the dissident kin usually set up their homesteads a good distance from the original or parent village. The links between different sections of the same matrilineage, therefore, tend to become lost, and the new village, conscious of its own identity and unity, gradually loses its links with the parent village. The general structural relationship between the villages as wholes, and their headmen as their representatives, is fixed at the time when the division takes place, and this is remembered. But the actual genealogical 621 613

[1] See Chap. III, p. 71.

2: Mitchell E-5 (1946-1949) 1956 FT7 Yao FT7

621 links are usually forgotten, so that the two villages are known to
613 be related, but it is not certain how. The matrilineages to which the two headmen belong recognize this forgotten link and they refer to this relationship as *ulongo ŵakumbana*, which I can only translate as ' distant relationship '. In Cikoja village, for example, the headman's matrilineage, or as I shall call it, dominant matrilineage, is related to at least two other villages. These are Mbande and Cibwana Kawinga, both in Jalasi's area. The links with these two groups cannot be remembered. The first Mbande and the first Cikoja, I am told, had the same mother. Neither the present Cikoja nor any of his villagers could remember the genealogy earlier than the fourth Cikoja. A section of Mbande village, nevertheless, lives in Chiwalo's area near Cikoja and there is a fair amount of co-operation between the two villages to-day. Cibwana Kawinga is by the same explanation a ' mother's brother ' of the present Cikoja ; he is called in whenever there are serious disputes in Cikoja's village, and brings the force of a senior relative to bear on Cikoja.

621 People who are thus vaguely and distantly related may express
613 their kinship in many ways. For example, they say that they are
601 ' the people of one founding ancestor or ancestress '. They may say that they are *acina Masumba*, ' the people of Masumba ', or *acina Nkopo*, ' the people of Nkopo '. Masumba and Nkopo here may be either a woman from whom they are descended, or a man who was the leader of the group when they first moved into the area. Where a man is mentioned as the founder the term is used for the descendants of the man's sisters. But like most terms for social groups its meaning changes in different contexts. In another context, for example, *acina Cikoja* means simply the people of Cikoja village and has no reference to matrilineal descent at all.

Other terms are more specific. The word *mpago* may be used in the sense of one type or kind, as *pampago pamo*. An arbitrator at an intra-lineage dispute said, for example, ' You people who have a case are people of one kind [*ŵandu pampago*].' The word *cipapo* may be used in much the same way. But even here the reference may be to the entire span of matrilineal relatives whose relationship is vague and uncertain (*ŵakumbana*) ; or it may refer to a section of relatives having one known ancestress ; or it may even refer to a segment within the section.

2: Mitchell E-5 (1946-1949) 1956 FT7 Yao FT7

Among the relatives of the largest order of kinship (*cipapo*) there is a bond only slightly more intimate than that among people who have the same clan-name. There are none of the jural and moral obligations which characterize membership of a matrilineage which is a part of a village. The larger group, for which there is no exact Yao-term, may be looked upon as a maximal lineage. It is characterized by a relationship of a more definite bond than that of having a common clan-name, but the members may still marry.

The Matrilineage

It is within the village that the matrilineage operates most clearly. The distant matrilineal link which connects villages such as Cikoja, Mbande and Cibwana Kawinga, is set in a context of inter-village relationships and is therefore part of the political system. Within the village the matrilineage becomes a corporately acting group of a different dimension. It is in this order of lineage within the village that we have the set of relationships described by Professor Fortes as applying to the inner lineage[1] among the Gold Coast Tallensi.

The depth of a matrilineage within a village is seldom more than five or six generations from the founding ancestress to the new-born children. The name of the founding ancestress is remembered and the descent of each member of the matrilineage can easily be recounted. The ancestress is known as the *likolo* or *lipata*, words which also refer to the trunk of a tree. We have seen how at a headman's installation ceremony the image of a tree was invoked in describing the lineage.[2] We find it once again here, where the founding ancestress is seen as the stem or root from which all members of the lineage have sprung, and the various sections of the matrilineage are seen as the branches (*nyambi*). This symbol of the lineage appears also during offerings to the ancestors. The chief, or headman, in

[1] See Fortes, M., *Dynamics of Clanship among the Tallensi*, Oxford University Press (London, 1945), and *The Web of Kinship among the Tallensi*, Oxford University Press (London, 1948). The Yao system of lineages is not the clearly segmented type of structure characteristic of the Tallensi. I hesitate, therefore, to use Fortes's terms, and use *matrilineage* for the localized unit which is usually a component of a village.

[2] See Chap. V, p. 119.

2: Mitchell E-5 (1946-1949) 1956 FT7 Yao FT7

621 making the oblation, pours the beer or sprinkles the flour at the
613 root (*lipata*) of a shrine-tree. As would be consistent with this
769 way of looking at the lineage, genealogically-distant ancestors are said to be 'below' (*pasi*), so that if a Yao wishes to say that a certain person was a matrilineal ancestor many generations back, he would say that he was 'very much below'.

The Concept of 'The Mother'

613 The matrilineal descendants of the founder look upon them-
562 selves as having been fed from the same breast and may express
843 this by saying 'we are of one breast'.[1] Deep sentiment is attached to the idea of the mother among the Yao. There is, for example, a sharp distinction drawn between those women who have had children and those who have not. When a woman becomes pregnant for the first time, she is given instruction in child welfare when she undergoes a special ceremony (*litiwo*). This is a ceremony which is publicly announced and attended by most of her matrilineal and other kinswomen and acquaintances. No woman may attend this ceremony if she has not herself had a baby. Thus her change in status in the community is clearly shown by the public recognition of her condition, and the fact that she is initiated into secrets which are shared by other mothers only. Her position in the lineage is much enhanced when she becomes a mother. It is the most important step towards becoming a village founder herself.

562 The concept of 'the mother', in general, also appears in the
601 boys' initiation ceremonies. Certain phases of ceremonies may
881 be conducted only with the help of the women. They have to clap the rhythm to which the 'tailmen'[2] do their dances. Here all women are classified as 'mothers' and without their co-operation the ceremonies could not be conducted. During the same ceremonies three women appear with baskets of food on their heads. The tailmen remove the baskets and sacralize the

[1] *Tuli peŭele pamo.* The word *mlango*, a doorway, is also commonly used. The idea in essence is exactly the same. It is the concept of the children who come to settle around a woman's hut door. It is used as *ŭandu pamlango pao*, the people of his lineage section.

[2] The *m'mchira*. These are the functionaries in the initiation ceremonies. They carry medicated zebra tails during these ceremonies, and this gives them their names. See especially Stannus, 'The Wayao of Nyasaland', 229 ff.

2: Mitchell E-5 (1946-1949) 1956 FT7 Yao FT7

562 601 'sisters' and 'mothers' because alternate generations are merged in kinship terminology and in behaviour. A man's sister's daughter, for example, is called 'mother', and her daughter (his granddaughter) in turn becomes 'sister'. A woman calls her male matrilineal descendants 'children' (*mwanangu*), or 'grandchildren' (*yisikulu*); her matrilineal male progenitors 'mother's brother' (*akwelume*), or 'brother' (*alumbwangu*).[1] By extension, therefore, another way of expressing common matrilineal descent is to say that two people are the children of one person, *ŵanakajumo*, even though that person may be their great-grandmother. A term which is almost synonymous with this is *mucitumbu cimo*, 'in one womb', used as 'we were conceived in one womb', though once again the reference may be to a common grandmother. But the inclusiveness of these terms varies in different contexts. Any may refer to the matrilineage of maximal span within the village, or to a section of the matrilineage seen as a segmented organization of parts. It is only by reference to the particular ancestress that the range of the term may be determined.

The Unity of the Matrilineage

613 A person identifies himself most closely with the members of his matrilineage from whom he expects most help and whom he, in turn, is expected to help. If he is called upon to pay a heavy fine it will be the members of his own matrilineage who will club together to find sufficient money. They, more than others, [753] support him in his quarrels. They come to his aid when he is ill or injured, by consulting the diviner and trying to find the sorcerer who is causing his illness, and by finding medicines which will bring him back to good health. They send him money if he has left the country and needs it to return. The goods he brings home from the labour centres will be shared mostly [764] among his matrilineal relatives. They will find the food to be used at his funeral and also see that his burial is properly carried [428] out. He owes these duties in turn to them. His property will stay almost entirely within the matrilineage after his death.

613 753 Relationship, unless qualified, is looked upon as being entirely matrilineal. This is well illustrated by the beliefs about the

[1] She more commonly addresses them as *acimweni*. See p. 147.

2: Mitchell E-5 (1946-1949) 1956 FT7 Yao FT7

disease *ndaka*.[1] This disease, as we have seen, affects the sexually inactive when they are brought into contact with those who are sexually active. But the disease will only affect the members of the matrilineage of the errant person. For example, suppose a labour migrant is coming home from Southern Rhodesia and has, among other things, a few pounds of salt in his baggage for a gift to his relatives. Suppose also that while he is returning he has promiscuous intercourse. The salt becomes charged with sexual heat and if he gives it to any of his matrilineal relatives to cook with, they will contract this disease. He must therefore give the salt to members of another matrilineage, even if they live in the same village. 613 753

It is when the unity of the matrilineage is threatened, by either death or division, that its mystical value appears most clearly. When a member of the matrilineage dies the whole matrilineage is thrown into mourning and remains continent for three days. On the fourth day they perform a ritual purification and some members resume sexual relations, but the closest matrilineal relatives, such as the mother and uterine siblings, remain continent for the remainder of the mourning period, which is about 36 days. 613 765 834

It is tension within the lineage which is most closely attended by dire results. The most important reflex of this tension is accusations of sorcery. Good relationships among members of a matrilineage are adjured, mainly because friction opens the way to sorcerers. The Yao believe that sorcerers kill their matrilineal relatives so that they may share the flesh with other sorcerers. The sorcerer is fundamentally a wicked person and may kill any relative but is more likely to kill those whom he hates. Hence it is most important that relationships are kept amicable within a matrilineage for fear that sorcery ensues. 613 626 754

An interesting variation of the dangers of sorcery is the belief that sorcerers take the opportunity of squabbles within a matrilineage to kill one of the members. The rationale behind this is that the diviner's instruments are unable to detect the origin of the sorcery beyond the immediate cause. A diviner will indicate that the cause of death of, say, a child is sorcery, but that the witch is obscured behind the quarrelling words of some relative. Consequently, danger to a matrilineage ensues when one of its 613 754 578 626

[1] See Chap. V, p. 112.

2: Mitchell E-5 (1946-1949) 1956 FT7 Yao FT7

613 members goes to an outsider and grumbles to him about the
754 family squabbles[1] and quarrels. The outsider then takes the
578 opportunity of using this squabble to introduce his sorcery into
626 the lineage. The Yao greatly fear backbiting because of their dread of sorcery and none dreads it more than a village headman, a warden of a sorority-group,[2] or a person in the position of having to keep a matrilineage or section together. These people are continually adjuring the women under them—for it is the women who are believed to be the main culprits—not to fight among themselves; and if they do, not to take their complaints to an outsider but to the senior member of the matrilineage. The significance of this in relation to lineage unity is plain enough.

613 Apart from sorcery, strained relationships between members of
578 a matrilineage are believed to be dangerous for other reasons.
843 Malice may adversely affect people who are in mystically danger-
224 ous states. The most common of these states is pregnancy. If a woman has a quarrel with a matrilineage member while she is pregnant she is likely to have a difficult labour. The Yao say 'the womb has heard these bad words'. Another situation where malice or quarrelling will cause difficulties is in hunting. The luck of the chase is capricious and malice may easily bring bad fortune to an otherwise good hunter. For example, a successful hunter once gave each of his two sisters a piece of venison. Each complained that the other had been given the larger piece and quarrelled vehemently about it for weeks. The hunter now found that no game fell into his traps. He went to a diviner who indicated the quarrel of the sisters as the cause of his failure and told the hunter to get them to 'blow water' (*kupersya*). He did this; good relationships were restored and his traps were filled once more.

613 These deleterious effects, like the curse, are connected in some
578 way with the ancestor spirits. This is sometimes expressed quite
769 clearly when a person is called upon to 'blow water'. A mother who wishes to revoke a curse, a woman who wishes to
755 recant her malice towards her matrilineal relative who is suffering in childbirth, or a man whose sister's son is ill supposedly because

[1] This is called *miseri*, which I have translated as 'backbiting'. This idea is extremely important, as we shall see later.

[2] i.e. those men who are responsible for their sisters and their descendants. See p. 145 ff.

2: Mitchell E-5 (1946-1949) 1956 FT7 Yao FT7

of his malice towards him, might equally be called upon to do this. The person makes a statement to the effect that he bears no malice and hopes that the sufferer will be well. For example, a woman in Cikoja village who was called upon to 'blow water' during the labour pains of her mother's younger sister's daughter's daughter,[1] because they had quarrelled over a sifting basket, put some water in her mouth, spat it out and said: 'Those words I spoke: the basket is mine. This is my child. Both are mine. When I spoke and asked my child about it, they were not words to place in my heart, so that to-day we should have to go to the diviner because my child is hitched[2] and be accused because of the sifting basket. These words I push aside. I do not know whether there are other words that we fought about, but if they are these, my daughter's child come out!'[3] Sometimes the ancestors are specifically invoked, '*Conde, conde tiwamasoka* . . .' 'Please, please, O spirits . . .' This is a public confession of the tension within the lineage and it allows the lineage leaders to attempt to straighten out the difficulties, as they did in this case.[4]

These beliefs in mystical dangers of one sort or another which beset the matrilineage as the result of bad feelings within it, have the effect of constraining matrilineage members to maintain peaceable relations among themselves and are, therefore, conducive to maximum solidarity.

It is clear from MacDonald's writings that in earlier times the periodic offerings to the spirits of the ancestors was a valuable way in which the solidarity of the matrilineage was expressed. With the introduction of Islam and Christianity these sacrifices have disappeared. I have not worked in Christian areas long enough to be able to say whether the ancestor cult still persists. In the northern area, however, I can say that the ancestor cult survives as part of the practice of Islam. Periodically, feasts are held in

[1] See the history of the division in Cikoja lineage, pp. 165-6.

[2] *Kukolekwa*, i.e. the child cannot be born.

[3] *Uwe nakolilegala ciele cila cangwe. Aje mwamanga. Yewepe yangwe. Pinaweringa nikwenya, kumbenya mwamanga, nginiwa nakilile gakwiko kunilina, gani ngaka lela nikwenda kuciwapo cakolekwa mwamanga nikumkumula uwe lipenga lya ciele. Cilego ngwanako. Kwalini ngapali gani gwawa kangwanile nambo ngapenga nakolile gakwe, ciakula cangwe cikapwe.*

[4] I have drawn attention to the cathartic effect of accusations of sorcery and public confession of guilt in a paper, 'A Note on the African Conception of Causality', *The Nyasaland Journal*, v, 2 (July 1952), 37-8.

2: Mitchell E-5 (1946-1949) 1956 FT7 Yao FT7

613 769 178 memory of the ancestors. These are called *sadaka*[1] and are similar to those held at the end of the mourning period. They are usually held when one of the lineage members has had a dream about an ancestor. The senior members are told of this and interpret it to mean that a feast in his memory should be held. The women cook a meal of mush and relish and on an appointed day the members of the matrilineage who live within a reasonable distance gather at the village of the senior section and share the feast. During this feast Islamic texts are chanted in Arabic. It is clear that in this situation the context of the meeting is exactly the same as that of the old offerings made by the lineage leader at the shrine-tree. The common ancestor is recalled and the matrilineage by meeting reaffirms its solidarity.

The Localized Matrilineage

613 621 The matrilineage may itself be localized in the form of a hamlet or small village, as in Ali Kasunka village. It has 9 huts situated about half a mile from Chiwalo's court house in Kawinga's area. The genealogy, hut plan and census are set out in Appendix B. I summarize the genealogy here to show how the hut owners in the village are related. The village is about 300 yards across and about a quarter of a mile from the main road.

Ali Kasunka (C6),[2] the warden of the village, formerly lived in a village known by his mother's brother's name Mailo (B1). Ali Kasunka is the son of the chieftain Mposa in Kawinga's area. The village of Mailo still exists in Mposa area. Ali Kasunka and his sisters moved out of Mailo village and established a hamlet in Malemia's area near Zomba township. While they were there Ali Kasunka went to work as a domestic servant in Zomba. One day the sister of the cook in the household in which he was working came down to visit her brother. She became Ali [595] Kasunka's second wife (he was already married to a woman from Malemia area) and lived with him in Zomba. She was the daughter of the present chief Chiwalo, and was living at her

[1] Sanderson says that this is derived from the Arabic word *sadaqa* which means 'alms'. Sanderson, M., on 'Ceremonial Purification among the Wayao, Nyasaland', *Man*, xxii, 55 (June 1922), 91-3.

[2] The reference number is to assist the reader to identify the person on the genealogy in Appendix B.

village of birth in Chiwalo's before going to Zomba. After six years, when the land round Ali Kasunka's village in Malemia's had become exhausted, he decided to move the hamlet to Chiwalo's and selected a site about a mile from the hut of his second wife. This is where the village has been since 1940. 613 621

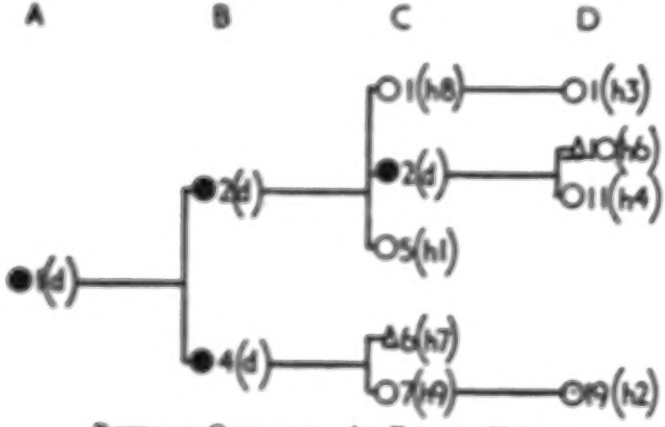

Reference Genealogy. Ali Kasunka Village.

Considering the matrilineage in detail: although Ali Kasunka's mother's mother is known, her collaterals are not, and Ali Kasunka's mother's mother's only sibling was her brother Kasembe. This genealogy is, therefore, built up from Ali Kasunka's mother's mother (A1). She had three daughters. One (B6) died before she had any children. Nyangu (B2), one of her other daughters, has two surviving daughters, Mbalasyao (C1) and Bini Kasembe (C5). Nyangu's other daughters, Amaliama (C2), Amwikonde (C3), and Amasingati (C4), all died when the village was at its present site. Amasingati died before she had any children.

Mbalasyao's (C1) daughter, Bini Mtuwa (D1), is in the village. Nalolape (D2) accompanied her husband to Cholo, where he went to work in 1947. Yahaya (D3), Ajida (D4), and Arwabi (D5) have all married uxorilocally. Taimu (D6) is unmarried and is away working for an Indian transport driver in Zomba, and Idi (D7) is working for a local Indian storekeeper as a domestic servant. Loni (D8), a girl of about 8 years, sleeps in her mother's hut.

2: Mitchell E-5 (1946-1949) 1956 FT7 Yao FT7

• 613 621 Amaliama (C2) had five children before she died. The eldest Goloni (D9) is dead but he had married out before he died. The second, Mwanace (D10) has married virilocally and occupies hut 6. He has no children. Nyangu II (D11) has taken the name of her mother's mother (B2). She has gone to her husband's village with her five children, because he succeeded to a village headmanship in Mposa's area. Alieje (D12) is in the village and has three children, Kasonga (E9), Undeje (E10), and Amale (E11). All of them have not yet reached puberty and they sleep in their mother's hut.

Before she died Amwikeende (C3) had only one son, Mbogo (D14), who is now about 5 years old and is cared for by his mother's elder sister, Mhalanyao (C1), in whose hut he sleeps.

Amasingati (C4) died before she had children.

Biti Kasembe (C5) is still living in the village (hut 1). She had only one daughter, Biti Sale (D15), who is in the village and who in turn had two sons, Tsibu (E12), who died in infancy, and Rajabu (E13), who is an infant.

The other main section of the hamlet is made up of the descendants of Nyangu's sister Abeda (B4), who had six children. Ali Kasunka (C6), who is the warden of the village, is married uxorilocally about half a mile away at the village of his second wife. His first wife who was living virilocally has recently gone back to her village in Zomba to look after the children of her late elder sister. Ali Kasunka does not expect her to return. He had three children by her. They were Biliate (D16), who is married out, and two children who died in infancy. His children by his second wife live with her in her village. Ali Kasunka's sister Atawile (C7) had in all fourteen children of whom only Biti Mtemula (D19) survived infancy. She is living in the village (hut 2) and has had two children of whom only Wilson (E14), now aged 7, has survived.

Ali Kasunka's other surviving sister, Assanyeje (C8), with her 7-year-old child Mbogo (D33), has gone to Zomba with her husband who is working there. Twalieje (C9) died before the village moved into this area and before she had children. Twalemwapi (C10) also died before she had children. Andondanyeje (C11) died while living virilocally and her two sons married near her husband's village and have never lived in Ali Kasunka's village.

2: Mitchell E-5 (1946-1949) 1956 FT7 Yao FT7

Table XXV sets out the disposition of the adult survivors of this matrilineage. 613 621

TABLE XXV

RELATIONSHIP OF ADULT SURVIVORS: ALI KASUNKA VILLAGE

Relationship to Founder	In Village	Married out	Labour Migrants	Total
D	—	—	—	—
S	—	—	—	—
DD	3	—	1	4
DS	1	—	—	1
DDD	4	1	1	6
DDS	1	4	2	7
Females	7	1	3	10
Males	3	4	2	9

In this hamlet Ali Kasunka is both village headman and the senior male member of the matrilineage. He brought the village into Chiwalo's area and he had the responsibility for the welfare of its members. He has to arbitrate in the disputes that arise within the village and he must at least appear at arbitrations where the members of his village have come into conflict with outsiders. 613 621 622

THE CONFLICT OF MALE AUTHORITY AND UXORILOCALITY

Although descent is matrilineal, authority still rests with the men. The senior man by generation and age is the leader of the matrilineage. It is true that there are a number of small hamlets under women. Biti Nkula village is one, Biti Cimeta is another. But even for these villages there is usually a man who can be called in to handle the affairs of the village. He may be a classificatory brother of the village headwoman, or he may be her own son if he is old enough. For example, in Biti Nkula's village, it is her own son Adam who goes to the divinations and finds the necessary medicine when people fall ill. He also attends the court cases involving a member of the village. Adam is married to a woman in Ndiwagani's village about three-quarters of a mile away from his home and he is therefore easily 562 591 613

2: Mitchell E-5 (1946-1949) 1956 FT7 Yao FT7

562 available when needed. When he became a labour migrant in
591 1945, his younger uterine brother Lipepeje took over the responsi-
613 bilities. He is married in Ali Kasunka's village, which is about a mile from Biti Nkula's. In Biti Cimeta's village the minor disputes are settled by the headwoman herself. Her younger sister's son is married in a village ten miles away, and he would take over the duties if he could. He is married to his sister's husband's sister, and his sister's husband has threatened if he should try to take his wife home he will in turn take his wife to his home. Rather than stand the loss of a member from his matrilineal village he prefers to remain married uxorilocally. When more serious disputes occur he comes to Biti Cimeta's to settle them.

The principle of uxorilocal marriage is thus in conflict with the principle of male leadership of the lineage. If a man is living too far away he cannot attend to his numerous duties. The conflict can be solved in one of three ways. The first is that the man may marry in a village which is close at hand, and most marriages do take place between people who live near each other.[1] Second, he may marry a cross-cousin who is living in the village, albeit in another section of it. He need not then move out. Third, he may bring his wife into his village. The last two alternatives are from his point of view the best. He is then living with his matrilineal relatives, and among the group in which he has clearly defined rights and unequivocal status. But his wife's brothers will resist his attempts to take his wife from her village, especially if she is still capable of bearing children. He has to persuade her brothers to let her go with him and if they refuse, or if the woman herself refuses to go, he is helpless. If he wishes to live virilocally now his only course is to divorce the woman and marry a woman who will live virilocally with him. If he does bring his wife to his village she is kept there by only loose ties of marriage, and on the slightest pretext her male relatives will take her back to her village or she herself will run away home.

562 The larger the group of relatives to be looked after, the more
591 urgent is the need for the senior matrilineal male to live with his
613 lineage. All the villages headed by females are small. Table
621

[1] 75 per cent of marriages are contracted by people who live within 10 miles of each other. See *Marriage among the Mashingai Yao*.

2: Mitchell E-5 (1946-1949) 1956 FT7 Yao FT7

XXVI sets out the position of a casual sample of 36 villages in Chiwalo and Nyambi areas. Among the 23 villages which had

TABLE XXVI

SIZE OF VILLAGES UNDER HEADWOMEN AND HEADMEN

Type of Village	Under 10 Huts	Over 10 Huts	Total
No matrilineage male resident .	13	2	15
Matrilineage male resident . .	10	11	21
Total	23	13	36

less than 10 huts each, 13 or 56·6 per cent had no male matrilineage members living in them. Among the 13 villages which had more than 10 huts, only two or 15·4 per cent had no matrilineage male members living in them.[1] The largest village in which there was no matrilineal male had only 11 huts. When the *size* of the village increases, the senior male matrilineage member tends to move in to live with his wards.

THE SORORITY-GROUP (*mbumba*)

But as the village grows and the duties of a senior matrilineage male become more onerous, a form of organization appears within the lineage which lessens his burden. This takes the form of the differentiation of sibling groups, and is part of the normal process of segmentation which is inherent in any lineage system. Consistent with the Yao idea that men should take care of the affairs of the lineage, sisters look to their eldest brother when they are in trouble. This group of sisters in the care of their brother is called *mbumba*. In the plural *acambumba* the word refers to women in general, but in the singular it refers to a particular group of women in the way I have explained. The word is always used in the sense of '*so-and-so's mbumba*', as *mbumba ja Cebbayele*. The central concept here is the brother-sister link and I have accordingly translated the word *mbumba* as sorority-group.

The man who is in charge of the women, usually their eldest

[1] Diff. of *per cent* = 42·1 ; S.E. of diff. = 17·1 ; C.R. = 2·4 ; p = 0·016.

2: Mitchell E-5 (1946-1949) 1956 FT7 Yao FT7

The close link of brothers and sisters is also reflected in the kinship terminology. The common term used by both men and women to address sisters is *ceuwali* and it is also applied to all women out of respect. But the term which is used descriptively and sometimes in address, cross-sexually, is *akuluwanga* (my sibling-of-opposite sex). It is self-reciprocal and thereby expresses the special relationship between the man and his sisters. Two sisters address each other in everyday conversation as *ceuwali*. When it is necessary to be more specific an elder addresses the younger as *akuluwanga*. These are also descriptive terms. A man addresses his younger brothers as *apwanga* while they address him as *aciuwesi*. Women also address their elder or younger brothers as *aciuwesi*. This word is widely used as an honorific title but it is especially used for people who are in authority. The chief, for example, may be referred to as the *aciuwesi*, and men frequently call their mother's brothers and other senior matrilineal male relatives by this term. An elder brother has the same duties towards his younger brothers as to his sisters, so that use of the term of address *aciuwesi* here indicates his position of authority over them.

From the point of view of a warden, his sorority-group is essentially made up of his sisters. We have seen that he is responsible for his younger brothers in exactly the same way as he is for his sisters, though technically they are not his sorority-group. He also has control over his sister's children so that ideally a warden sees his sorority-group as his sisters and their daughters and their daughter's daughters and so on. But a man's sister's daughters will probably have as their warden their own brother who stands in the same relationship to them as their mother's brother stands to their mother. The matrilineage is therefore organized internally in a system of inclusive sorority-groups extending from the eldest surviving member down to the youngest. However, a component sorority-group of a matrilineage does not begin to appear as a corporate group until the man who is to be its leader is old enough to take charge of the affairs of the women under him. Naturally, the age at which this happens is largely a matter of circumstance. Theoretically a man may not take charge until he has been initiated. But Yao boys nowadays are usually initiated at about 8 to 10 years of age. Obviously a child of this age cannot take over the affairs of his adult sisters, so that his mother's brother looks after

2: Mitchell E-5 (1946-1949) 1956 FT7 Yao FT7

613 them until he grows up. It is only when the boy becomes
562 adolescent that he begins to take an active part in these affairs.
593 This may begin in a small way. He may, for example, accompany
604 his mother's brother when he goes to consult a diviner. Or he

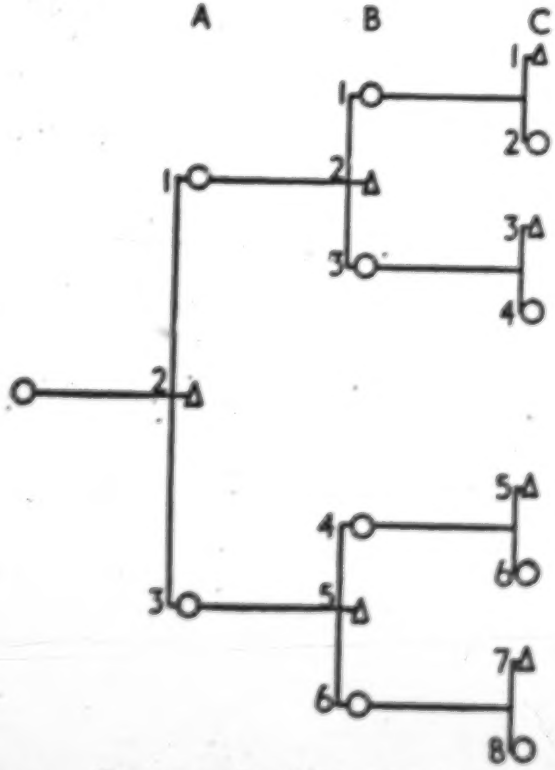

DIAGRAM 3. THE SOROITY-GROUP.

A2 sees his sorority-group as being composed of A1 and A3 and by extension *their* children.

B2 sees his sorority-group as B1 and B3 and by extension *their* children.

B5 sees his sorority-group as B4 and B6 and by extension *their* children.

may be given the charge of the conjugal affairs of one of his newly-married sisters. Gradually he assumes more and more responsibility. His mother's brother on the other hand falls more and more into the background and becomes rather a consultant than an active participant.

2: Mitchell E-5 (1946-1949) 1956 FT7 Yao FT7

593 one brother is unsuitable, they turn to another, uterine or collateral, and only if he too is unsuitable do they then turn to other relatives.

The attitude of Naliwa shows very clearly, too, the dependence of the women on the man. They have to wait for his action before they can settle their difficulties. This is part of the general process of internal differentiation within the lineage. The women become organized into small groups, each under the care of a man. These are siblings, so that their common descent, well expressed by the Yao *mucitumbo cimo*, 'in one womb', is the real unifying bond between them. When a Yao wants to express his close link with his uterine sister, that is to emphasize that she is not a collateral or classificatory sister, he stresses that they are from 'only one womb' (*citumbo cimpepe*). Naliwa says that a man who controls his sorority-group so that they live happily together is a happy man. He is happy also because his prestige is enhanced if he is a warden of a sorority-group. Being a warden is the first step on the ladder which leads eventually to independent village headmanship, and the man who has a large sorority-group under him can achieve this aim more easily. Therefore, the warden of a large sorority-group has even higher prestige than a man who has only a few sisters to look after. But the aphorism that 'chieftainship is slavery'[1] achieves significance when a man acquires more dependants.

Segmentation and Fission in the Matrilineage

613 621 The sorority-group organization in the matrilineage assumes most significance when viewed in its political setting. Segmentation and differentiation within the matrilineage consistently leads to splits, hence to village break-ups and the birth of new villages. Fission in the matrilineage usually appears when the wardens of the younger sorority-groups are over the age of 30. At that age each man is adult and therefore old enough to be responsible for his own and his sorority-group's actions and, usually, his mother's brothers, who when alive had kept their younger relatives united, are dead.

The events leading up to a split in a matrilineage usually follow

[1] From Smith and Dale, *The Ila-speaking Peoples of Northern Rhodesia*, Macmillan (London, 1920). For its significance, see Gluckman, Barnes and Mitchell, 'The Village Headman in British Central Africa', *Africa*, xix, 3.

2: Mitchell E-5 (1946-1949) 1956 FT7 Yao FT7

The events leading up to a split in a matrilineage usually follow a definite pattern. Very frequently indeed an accusation of sorcery is involved.[1] This usually stimulates a dissatisfied warden to gather his dependants together and to move off to found a new village. Elsewhere I have set out in detail the typical events which precede a village break-up when the lineage splits after a man quarrels with his mother's younger sister's sons.[2] These splits are not always successful because the seniority of the older relative, especially if he is a headman of some standing, may serve to reunite the village, and the leader of the dissident group may be unable to maintain its independence. This is what happened in Mwambajila village.

613 578 621

Mwambajila is one of the more important village headmen in Jalasi's area. The tension between him and his mother's younger sister's son Mbwana Somu reached a climax after a series of deaths among Mbwana Somu's children. He consulted a diviner and found that Mwambajila was the sorcerer causing these deaths. Mbwana Somu was very angry at this and told his sisters that they ought to leave the village and go to live in Liwonde's area, i.e. about 15 miles away. Eventually he persuaded them to move and they went to live on the Masanje river banks. But the deaths continued. The women now started to be worried because they had left Mwambajila's village

---

[1] The implication of this cannot be understood without some knowledge of Yao divining procedure. The type of divining is usually by gourd and object (*ndumba*). The diviner first of all establishes the reason for the visit, i.e. death, illness, theft, or whatever it is. He then consults his gourd and throws into his hand a variety of symbolic objects. He builds a story round these objects, and finally pronounces that he sees some person whom he vaguely defines. The consultor is then asked to mention who this could be. Though sorcery is supposed to be practised mainly in order to get human flesh for ghoulish feasts, it is not believed to act haphazard. In other words, a sorcerer is supposed to select his victims for revenge as well as for meat. The selective processes at work, therefore, when the consultor seeks to reconcile the diviner's findings with his own suspicions, are that he should select someone who is obviously evil, i.e. from his point of view, one with whom he has been quarrelling, and he should appraise the possible motivation for sorcery. After he has made the selection the name is tested by the diviner and the consultor may later submit a chicken to the poison ordeal to test the diviner's findings.

[787 754]

This, of course, confirms Evans-Pritchard's analysis of Azande witchcraft and I here acknowledge my debt to him for stimulus both from his book and from the discussions we have had on the topic. I assume his analysis in my discussion. See Evans-Pritchard, E. E., *Witchcraft, Oracles and Magic among the Azande*, Clarendon Press (Oxford, 1937).

[2] In *Seven Tribes*. Case History II, 321.

2: Mitchell E-5 (1946-1949) 1956 FT7 Yao FT7

613 as he was supposed to be the sorcerer. Suspicion fell on Mbwana
578 Somu and eventually one of his sisters went back to Mwambajila and
621 complained to him. Later the sisters consulted a diviner and found, as they suspected, that Mbwana Somu was the sorcerer. Thereupon, they returned to Mwambajila and left Mbwana Somu living alone with his wife.

Here is an example of a village which did not manage to maintain its identity but returned to be re-integrated into its village of origin.

578 Conflicts between collateral brothers are not frequent. This
593 is for two reasons. Firstly, the opposition between lineage segments is usually expressed in a conflict between a man and
621 his mother's brother, a fact which is no doubt related to the opposition of proximate generations. Secondly, lineages seldom persist long enough to contain within them several segments in which collateral brothers are leaders.

Conflicts seem to occur more frequently among uterine brothers, a fact which is significant in the light of the particularly strong bonds which unite them. The relationship between uterine brothers is much the same as that between sisters.[1] They are intimately linked by their bond of kinship and depend on one another for care and support. Usually the elder brother has his younger brothers in his care, in the same way that he has his sisters.

But at the same time they compete for the control of the sorority-group. A man, we have seen, can seek prestige in the indigenous political system only by becoming a village headman. He can become a village headman only by mustering his sisters and setting up a small hamlet with them. The elder brother prevents his younger brothers from doing this because the sorority-group is usually under his care. The younger brother can gain control only if he can persuade his sisters that the elder is a sorcerer, or incapable, or in some way unsuitable for his position. Hence the frequent accusations of sorcery among brothers: it is a rationalization of a hostility arising from the structural position of uterine brothers, which, in view of the commonly accepted strong sentiments uniting brothers, may not be otherwise expressed.

The break-up of Mponda's village in 1940 clearly illustrates

[1] I have dealt with this more fully in my essay in *Seven Tribes*.

2: Mitchell E-5 (1946-1949) 1956 FT7 Yao FT7

The threat that lies over the head of an inefficient warden of a sorority-group is that of losing them to his younger brother, and it is scarcely possible to exaggerate the frequency with which this takes place in Yao society. 593 578

Intra-lineage Tension and Succession Disputes

The competition between brothers is heightened where the succession to an important name is involved. The rule of succession indicates a man's eldest sister's first-born son as the rightful heir. Informants in Jalasi's area told me that long ago the succession used to pass along the line of collateral brothers first, before dropping a generation to the sister's sons. It is true that in Jalasi's genealogy there are one or two early successions from a man to his most senior brothers, but recently the succession has passed regularly to sisters' sons. MacDonald, writing in 1880, quoted the succession rule for the Mangoche Yao to be 'from a man to his eldest surviving brother and then to the sister's son',[1] but he describes in another part of the book the dispute for Malemia's name involving the deceased chief's younger brother and his sister's son, in which the sister's son's claims prevailed over those of the younger brother.[2] Stannus, writing of the Machinga in 1922, gives the rule of succession as I found it,[3] and suggested that MacDonald's interpretation of the Malemia succession dispute in 1875, was really a mistake, and that both disputants were sisters' sons of the head chief, but of different lineage sections. I cannot decide which account is true, but there seems to be no reason why MacDonald's general rule should be incorrect, especially since so much of the other material he recorded seems to be accurate. Also, as far as I could see, there are no differences in the Mangoche and Machinga Yao in successions to-day, so that it seems likely that there has been a change from adelphic succession to a straight system of matrilineal primogeniture. One is tempted to find a reason for this in the strong emphasis on patrilineal primogeniture in Islam, which was becoming widely accepted in these areas in the middle of the nineteenth century. Unfortunately I cannot bring direct evidence to support this hypothesis. 613

While the succession rule may indicate someone as having the

[1] MacDonald, *Africana*, i, 189. [2] MacDonald, *Africana*, ii, 190.
[3] Stannus, 'The Wayao of Southern Nyasaland', 377.

while the succession rule may indicate someone as having the
613 best claim to a headmanship or chieftainship, it does not ensure
622 that he will succeed. Succession to headmanship is not merely
562 a matter of assuming control over the matrilineal relatives of the headman. It is also taking command of the whole village as an entity in a political structure and keeping it together as a functioning whole. The village as a whole, as well as the perpetual senior relatives, has a say in the selection of the new headman, and they select the man who is likely to be the most suitable for the position. Here, as in most affairs, the women have an important say. When they consider his suit the village members discuss in particular the ability of the prospective headman to hold the village together. If he is unsuitable they may cite occasions when he is believed to have used sorcery, or sometimes they merely say that he ' has no mouth '. This means that he is incapable of settling the disputes which arise in the village and therefore is unable to keep peace within it. The attitudes of the villagers to suitors for a name are well brought out in the statements when the Misi name was considered.

There were two uterine nephews, Wadi and Mbulaje, whose claims were about equal though Wadi was the elder. The chief Kawinga sent his representative Kasonga to call for a decision. At a general meeting he asked the villagers whom they wanted. Typically Kasonga's remarks were addressed particularly to the women. There was a division of loyalties. Some said that they wanted Mbulaje because ' he was of good heart, he gave gifts, he laughed and was not bad tempered, and he looked after the people when they were ill '. Kasonga, however, asked the opinion of the women under Mbulaje, and they were apparently dissatisfied with him and supported his opponent. Kasonga therefore announced that the new headman would be Wadi. Mbulaje was dissatisfied with this decision and gathered about him his followers and went off to found a village elsewhere. But the position for Wadi was an uneasy one. He lived in dread of Mbulaje's sorcery. When he was ill just before he died, he accused Mbulaje of putting poison in his beer. After he died Mbulaje brought back the women he had taken away and adopted the attire of the village headman. The people cynically accepted this, saying that he should perhaps take it because if any other should try to be headman he would not enjoy the fruits long before he too was killed. But the women were not satisfied with this arrangement and led by Cilo, the headman's sister's son, migrated. They said, ' We wonder that our chief should have died. The heart of the present chief is not good. Those who will stay with

2: Mitchell E-5 (1946-1949) 1956 FT7 Yao FT7

him will be other people, but for us the bush does not eat a person.'[1] Mbulaje was left with a few personal adherents. My informant assured me that 'He is a most unhappy man to-day because he is forever accused of being the sorcerer who is causing the deaths of his relatives. People are saying that Mbulaje had broken the village because he wanted to be a chief when the people did not want him. The one the people wanted was killed. Nowadays, no one visits him because of his sorcery and the people are frightened of him especially at beer drinks.'

Immaturity disqualifies many prospective village headmen. A headman must be a man of experience and wisdom to take charge of a village. Unfortunately I cannot present quantitative data on

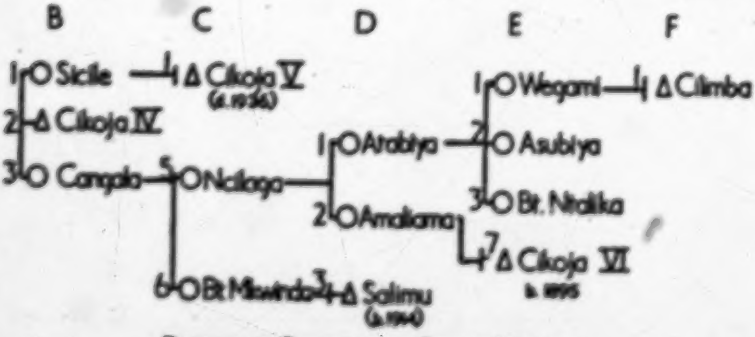

Reference Genealogy. Cikoja Village.

the ages when village headmen succeeded to their title, but my impressions are that unless a man is older than about 30 years he will not be considered for the name. Difficulty arises when there is a conflict between the principles of seniority and age. The older women do not always bear sons before their younger sisters, so that sometimes a man from a junior lineage section (*liŭvelelyanandi*) may be older than a man from the senior. If the younger, but senior, is, say, over 35 it is likely that, other things being equal, he will take the name, but if not the man from the junior house stands the better chance. This is what has happened in Cikoja village. The position is as follows. When Cikoja IV (B2) died, quite regularly the elder sister's (B1) first-born son (C1) succeeded. But many years elapsed between the birth of

[1] *Lituji lipangelye mundu.* In other words, if we go to live in the bush somewhere Mbulaje will not bewitch us. Yao sorcerers are supposed to eat their victims. See p. 117, fn. 1.

2: Mitchell E-5 (1946-1949) 1956 FT7 Yao FT7

622 the children of Ncilaga (C5) and Bt. Mkwinda (C6). There
613 was a big difference in the ages of these two women. Ncilaga
561 died nearly 30 years ago but Bt. Mkwinda died in 1948. When Cikoja V (C1) died in 1936, Salimu II (D3), who was born in about 1914, was very much younger than the present Cikoja VI (E7), who was born about 1895. Ncilaga (C5) had no sons, nor had Atabiya (D1), her eldest daughter, so the succession passed to the only son of Amaliama (D2) who was the senior male in that generation. Salimu II, genealogically senior to the present Cikoja, is to be the next headman. He has married a 'cross-cousin' (his mother's mother's brother's daughter's daughter's daughter) and lives in the village. He has already taken over the affairs in one section of the village. The other section has moved out and built about half a mile away with the present Cikoja VI. Note that the junior house—i.e. the descendants of Citeleka (A2)—are completely out of the succession. Wegami's (E1) eldest son, Cilimba (F1), is living virilocally with Cikoja VI in his section of the village and is already opposed to the prospective village headman Salimu. He is likely to be the village headman after Salimu dies and may even push his claim when the present Cikoja VI dies, because Salimu has been accused of sorcery on several occasions.

622 The conflict between sister's sons and mother's brothers at
578 successions has all but fallen away. The people oppose with
604 some vigour the idea that a younger brother should succeed. Frequently the chief or headman would rather his younger brother succeed, and sometimes indicates him as his successor. Kawinga, for example, has given his pre-succession name of Mlomba to his younger brother and many say this is tantamount to announcing Mlomba as the next Kawinga. This is violently repudiated by most people I have spoken to and they indicate a sister's son as the likely successor. Jalasi too, before he died in 1941, indicated Mbawa, his mother's younger sister's son as the successor, but when it came to the point a sister's son succeeded. The weight of custom is in favour of the sister's sons and usually the succession is fought out among uterine or collateral brothers in the first descending generation.

613 A matrilineal relative is always chosen to be chief in preference
662 to any other, but sometimes there is no heir. Other things being equal an unsuitable matrilineal relative will be chosen, or a

2: Mitchell E-5 (1946-1949) 1956 FT7 Yao FT7

622 Mpumbe I (A1) died in Jalasi's area before the European attack in 1896. His sister's son (B1) succeeded. When he died in 1920 three brothers survived him. He had no sisters. His immediate brother (B2) was considered unsuitable for the headmanship and it passed instead to the next surviving brother Mpumbe III (B4). When he died in 1943 the only survivor in the matrilineage was Mpumbe IV (B2), and although he was by this time a very old man and had been previously considered unsuitable, he was selected as the next headman. In 1947, when I first visited the area he was blind, almost permanently bemused with beer and quite decrepit. At the same time Ntuweni (C7), the son of Mpumbe II by a slave wife, was about 50 years old and was the virtual village headman. All disputes were brought to him and he settled most of them. He also represented the village to the District Commissioner and at Kawinga's court house when the presence of the headman was required. Wadi, Mpumbe I's fifth wife's daughter's daughter's son, assisted him. The only thing that Mtuweni could not do was to make the sacrifices for the girls' initiation ceremony, but he took the old man to the shrine-tree and held his unsteady hand while the latter poured the flour on the ground and called on the ancestors. When Mpumbe IV died in 1948, the succession passed to a distant sister's son whom they found in Ngongondo's village in Liwonde's area. Mtuweni, who might have succeeded to the name, and for all intents and purposes was a village headman before the headman's death, was accused of killing the old man by sorcery so that he could press his claim to the succession. He consequently moved out with his sisters and founded a village of his own about 15 miles away.

622 613 When there are no heirs available one of two courses is open. The first is that a patrilaterally-linked relative may succeed to the name. I have heard, for example, of a chief's son who succeeded as Matola in the Makanjila dynasty. The son, of course, had the same clan-name as the chief.[1] In the Makanjila case there is some evidence that there were other heirs available and that this succession was the result of a clever piece of lobbying by the slaves with the Administration. I have on record a few villages where this has taken place, and where the name has kept to the slave lineage.

A more likely reaction to this situation is probably what would have happened in Mpumbe's village if no matrilineal relative could be found. Mtuweni would probably have taken the

[1] Slave-children took the clan-names of their captors. See p. 72.

2: Mitchell E-5 (1946-1949) 1956 FT7 Yao FT7

village but called it Mtuweni and not Mpumbe village. The positions of the lineages in the village would have become inverted, and the patrilaterally-linked lineage become the dominant lineage. In this way villages may change their name or they may acquire two names, as happened to Mlungu village in Nyambi's area. Here a man called Masalu took over the control of the village. He was the son of the previous Mlungu and the village is known to-day by either of these names. The interesting point is what will happen when he dies, because there are now sisters' sons in a distant lineage old enough to take charge of the village. The rule is, as we have seen, that the matrilineal relatives always have the first claim.

Paternity and Segmentation

It is interesting to note that the paternity of brothers or sisters is not a differentiating feature in these social relationships. In the discussions which have hinged upon the care of sorority-groups I have never heard the paternity of brothers and sisters brought up as a reason why they should hold more or less closely together. The father is important in social life as I point out later, but while groups may be linked through paternity, it does not lead to a second principle of segmentation within the lineage.[1] This is manifestly the result of the fundamental difference in a system of matrilineal descent, where paternity is of less consequence than maternity is in a patrilineal structure. Among the Yao, unlike the patrilineal peoples of Southern and Northern Africa, no marriage payments are made; divorce is easy and frequent, and there are no disputes about the custody of children, who always belong to their mother's group whether they are illegitimate or not.[2] This is consistent with the view of the husband as a mere begetter of children. Among the Yao, the

[1] This aspect of segmentation in patrilineal peoples, with different wives of men as points of fission, is brought out particularly in Evans-Pritchard, E. E., *The Nuer*, Oxford University Press (London, 1940), and *Marriage and the Family among the Nuer*, R.-L.I. Paper, No. 11 (1944); Fortes, M., *The Dynamics of Clanship*, and *The Web of Kinship*; Kuper, H., *A Black Aristocracy*, Oxford University Press (London, 1947).

[2] This has been worked out in Gluckman, M., 'Kinship and Marriage among the Lozi of Northern Rhodesia and the Zulu of Natal', in Radcliffe-Brown, A. R., and Forde, C. D. (eds.), *African Systems of Kinship and Marriage*, Oxford University Press for the International African Institute (London, 1950).

2: Mitchell E-5 (1946-1949) 1956 FT7 Yao FT7

593 sisters are the points of cleavage in the matrilineage and the
611 group of uterine sisters is seldom divided, unless their daughters are old enough to form a corporate group and to move off with their mother to found a new village under their brother.

The Spatial Representation of Lineage Segmentation

361 The segmentation of the matrilineage is also shown in the
613 spatial distribution of the huts in a village. The daughters of
621 the women of the matrilineage set up their huts near to their mothers', and as this continues over a number of years, the internal segmentation of the matrilineage is automatically reflected in the disposition of huts. Most Yao villages will show this spatial representation of social distance, some more clearly than others. The clearest example I have is in Meni section of Majaja village, Nyambi's area. The disposition of the huts is set out in the village plan in Appendix C. Here are five fairly distinct groups of huts in the village. Four are descendants of four uterine sisters, the children of the previous Majaja. The space between these four groups is cleared and paths reticulate among the huts. About 200 yards away, the fifth group is out of sight of the others and must be reached by a path leading through the fields. In this cluster of huts live the children of the uterine brother of the four sisters. The matrilineal relatives of Majaja live about half a mile away in a quite distinct cluster.

In Cikoja village the same principles are at work but the situation is somewhat obscured by the number of patrilaterally-linked relatives. A glance at the village plan in Appendix D shows that the major segments, denoted by the symbols Ma and Mc in the plan, are quite distinct in the old village site, the huts of Ma being separated from those of Mc by a broad path and by a patch of bamboos. In the new village site across the stream the same general segmentation is shown where the two sections, Ma_1 and Ma_2, are separated by a path.[1] The separation of the clusters of huts is difficult to represent on a diagram because not only are the huts placed in discrete clusters, but they face in towards one another and the space between them is kept clean. Between the clusters there may be rubbish heaps and small garden patches. I describe later how the village continually

[1] I describe how this section of the village came to be across the river on p. 169.

2: Mitchell E-5 (1946-1949) 1956 FT7 Yao FT7

adjusts itself to the changes in its composition. At this point I wish only to indicate how the differentiation among the various segments of a matrilineage is reflected in the way the members site their huts in a village.

The Segmentary Process

The segmentary tendencies within the lineage are countered by unifying forces, but the cleavages between the lineage sections show up at the slightest provocation. Once the cleavage starts it widens rapidly and charges of sorcery become more and more frequent between the two sections until eventually one moves out to found a new village. A cleavage of this type has been developing in Cikoja village for the last eight years. When I left the field in 1949, talk of migration was in the air but it had not yet happened. I summarize the major events which led to the present situation.

The cleavage first manifested itself in 1942 when Bt. Mbwana (F2)[1] fought with her mother's younger 'sister' Ayesi (E8). These two were pounding at the same place in the village and Bt. Mbwana took Ayesi's flat sifting basket. She retained it for about four days without telling Ayesi that she had it. One day Ayesi saw it at the pounding point and asked Bt. Mbwana where she got it. They had a few words about it and Bt. Mbwana returned it and thought no more of it. She was pregnant at the time and was confined about a month later. It was her fifth child but she had a greatly prolonged labour. After labour had been going on for some hours, Cilimba (F1), her eldest brother, thought that there must be something wrong and sent his two younger brothers, Kasui (F3) and Gwili (F4) to a diviner. The diviner indicated that the cause of the difficult birth was that her 'younger mother' Ayesi was bearing her malice,[2] and advised that Ayesi should blow water from her mouth and declare that she bore no malice. Kasui and Gwili returned and went to Bt. Amisa (E4) who was Ayesi's elder sister and told her what the diviner had said. Bt. Amisa did as she was advised and fetched Ayesi to the door of the hut in which Bt. Mbwana was lying, and made her confess. The child was born immediately. After a week Cilimba and Kasui brought a complaint to the village headman Cikoja (E7). They accused Ayesi of trying to kill their sister. Cikoja sent a message to

[1] The reference numbers refer to the genealogy in Appendix D.

[2] Difficult labour is usually assumed to be due to adultery, but it may also be due to sorcery or malice. See p. 138, and Chap. VII, p. 183.

2: Mitchell E-5 (1946-1949) 1956 FT7 Yao FT7

613 578 845 683

his eldest uterine sister's first-born and second-born sons, Amidu (P18) and Kanyenga (P19), to advise them of this dispute, and told them that they would have to assume responsibility for the actions of their mother's younger sister, Ayesi. At the same time he sent to a neighbouring village to call in an unrelated man to act as arbitrator in the dispute. There was much argument and eventually the arbitrator awarded 5s. to be paid by Cikoja as leader of the junior lineage section to Cilimba as leader of the senior section. Amidu and Kanyenga found 10s. between them and gave it to Cikoja to give to Cilimba. The other 5s. they said they would try to find and pay later.

This payment formally settled the dispute but the tension was near to the surface. Amidu and Kanyenga said that there was separation in the group now that they had started to eat money. They were not wrong. Ayesi was pregnant and near to confinement. When she was confined her labour was as difficult as Bt. Mbwana's (it was also her fifth confinement). When her birthpang confessions seemed to be unavailing Bt. Bwana Isa (F16), her elder sister's daughter, went to Kanyenga to tell him that their 'younger mother' was having a difficult childbirth. Kanyenga remarked that she had had many children before and had not suffered, so that there must be some reason for her difficulty. Then Kanyenga and his sister went to Ayesi's husband's sister's hut [1] to find a representative to go with them to a diviner. When they got there Ayesi's husband's sister told her son to accompany her brother's wife's representative to the diviner. The diviner indicated that the cause of the prolonged birth was the malice felt by Bt. Mbwana because the rest of the compensation awarded had not yet been paid. He said that the only thing to do was to call Bt. Mbwana and to get her to blow water from her mouth at the hut door where Ayesi was confined. Bt. Amina went to find Bt. Mbwana and made her do this. Immediately Ayesi delivered a stillborn child.

The next morning Amidu and Kanyenga went to Cikoja and blamed him for the stillborn child.[2] Cikoja called Cilimba to listen to the complaint. Ayesi was inconsolable. She said that she had blown water for the sake of Bt. Mbwana who to-day had a child, whereas she was mourning her child. Once again Cikoja called in outsiders to act as arbitrators and the members of the two segments gathered to settle the dispute. At the end of protracted wrangling

[1] Ayesi was married to her MMMBDS (Kanili (D11)), whose lineage lived in another part of the same village. See genealogy and her events in Appendix D.

[2] Cikoja is a representative of his lineage even to the lineage members. This accusation simply means that the blame lies within the lineage.

2: Mitchell E-5 (1946-1949) 1956 FT7 Yao FT7

the arbitrators awarded 30s. compensation to be paid by Cilimba to Cikoja, less 5s. owing. This money was to be paid to Ayesi in compensation for the loss of her baby. Ayesi, however, refused to accept the money because she said she wanted to have her baby. The matter now became an intra-segment affair and Cikoja, Amidu, Kanyenga and Kaifa (F36), the son of Ayesi, with Bt. Amina had a meeting on what to do. Ayesi was quite adamant about it. There was nothing to do but to drop the matter, and the state of tension between the segments remained as it was before. 613 578 845 683

The next incident occurred in 1943. Mpulula, the husband of Bt. Amina, had some goats. One day two of them strayed on to the verandah of Bt. Madi's hut. Bt. Madi (F10) was the daughter of Anuna (F2) and a member of the senior lineage segment. One of the goats nosed its way into a basket of flour that was lying under the verandah and started to eat it. Bt. Madi came out and picked up a log that was lying nearby and threw it at the goat. It broke the goat's leg and the goat had to be destroyed. The owner, Mpulula, who was watching at that moment immediately rebuked the woman. He went and reported the matter to Cikoja and he sent a message to Mpulula's marriage sorety who sent back to say that they would meet at Chiwalo's hut the following morning. The arbitrator in the case finally decided that the correct action should have been to take the goat to the owner and to lay a complaint against him. As it was he had to award compensation of 30s. to be paid to the owner of the goat. Mpulula, however, refused to take the money. He argued that although the goat was his, so was the offender.[1] He said that he was afraid of sorcery so he would take a token amount of 3s. only. Cikoja gave him this.[2] 578 613 685

A few months later the eldest child of Bt. Bwana Isa (F16) suddenly fell ill and died.[3] Kanyenga, Kaifa and Mzuna went to the diviner. Kaifa, the son of Ayesi, went as the headman's representative. Kanyenga went as the warden of the sorority-group, i.e. the child's mother's brother. Mzuna was the marriage sorety of the child's father. Kanyenga consulted the diviner who indicated that Kanyenga's mother Bt. Amina was responsible but that she was not a sorceress. Sorcery, he said, was introduced by an unknown person who was using Bt. Amina's grumbling as a screen. Kanyenga refused to accept the finding of the diviner, saying that his mother had never been 'caught' 613 578 789

[1] His wife's collateral sister's child he also calls 'my child'.

[2] Mpulula is a stranger in the village and in this situation Cikoja represents both segments to Mpulula, even though the senior segment is guilty.

[3] Sudden illness, called *chiwa* or 'the hammer', is believed to be without a doubt due to sorcery.

Z: Mitchell E-5 (1946-1949) 1956 FT7 Yao FT7

0615
578
759

by a diviner before. He went back and reported the matter to Cikoja who accepted the finding. Kanyenga, however, argued that the real sorcerer was using magic to confuse the diviner. After some argument Cikoja sent for the then senior living member of the matrilineage, Bt. Mkwinda (C6), who was living in Chulo district, for Mbunde, a perpetual brother, and for Cibwana Kawinga, his perpetual mother's brother. A big meeting was held at which all the important local headmen attended. The case was argued on the point whether Bt. Amina and her husband, who was implicated in the accusation, could be sorcerers. After some argument the court decided that it was impossible for Bt. Amina to be a sorcerer without Cikoja also being a sorcerer, so that the accusation now settled on Cikoja himself. The case was taken up to Chiwalo who refused to award compensation. He reviewed the various charges of sorcery that had been made in the village before and observed that after the death of one of the supposed sorcerers the village had lived peacefully. He deplored the new friction and warned that there was to be no migration from the village. He advised Cikoja to mollify his sisters if he could. Kanyenga, Cikoja's eldest sister's son, said that he did not think that it would be possible because the headman had virtually accused his sister of sorcery. Cibwana Kawinga now said that there was no question of whether it could be done or not. It simply had to be done.

About one month after this episode, Ajina (F16), the last-born child of Bt. Amina, who was about 14 years old, died after two days' illness. When he was obviously very ill Kanyenga left with Mpalula to call Amido. They went first to wake Cikoja who in turn sent for Gwili (F4) to be his representative. Kanyenga went off to a diviner at daybreak without waiting for the father's marriage survey. The diviner indicated that there was tension in the lineage which was at the back of the child's illness. Eventually, he indicated that Bt. Nzaliko (F3) was the cause of the illness and it harked back to the dispute over the sifting basket and the goat. The diviner prepared suitable medicine and the two went back to the sick child. They got back about 8:30 a.m. and found the people congregated at the hut. In the meantime, Cikoja had sent off another divining party, Amido (F18) and Jasma (F7). Kanyenga prepared the medicine and gave it to the child. It seemed to be getting no better and before Amido and Jasma returned Cikoja sent Kanyenga and Gwili out to divine again. Then Amido and Jasma returned and indicated that the same person was responsible, and almost immediately afterward Kanyenga and Gwili came back with the same result. When Kanyenga heard this he went to Chiwalo and reported the matter. Chiwalo sent a messenger to call Cikoja, Bt. Nzaliko and her eldest sister's son Cilimbo (F1), who was the senior male member of the senior lineage

2: Mitchell E-5 (1946-1949) 1956 FT7 Yao FT7

613
578
754

segment. They were to go to Chiwalo's hut the next morning. During the night the child Ajisa died, and Chiwalo remarked that Cikoja was bad at heart and that he merely killed his people like chickens.[1] Four days later after the funeral a meeting was held to decide the cause of death. The arbitrator and chief's representative were the local court assessor. The man's party opened the discussion saying, 'If Cikoja is tired of us he should tell us. To-day he is killing his child. We know that Mpulula[2] has begotten a sheep. The sheep pen is filled and when Cikoja wants to eat he merely eats these.'[3] The arbitrator said that Cikoja had done a shameful thing and that they should make up a divining party to find the cause of death. Kanyenga immediately demurred and said that they had divined three times with the same results. Further divination was a waste of money. He insisted that they called Cibwana Kawinga. The meeting broke up and Cibwana Kawinga was called for. He came a day or two later and the meeting was resumed. He said, 'Cikoja, you are evil.[4] You have found it impossible to keep the village. Now what are you going to do with your children? The man's surety says that he is going to take Mpulula away. Your brothers say that they are going to take their mothers away. Now what do you say to this?' Cikoja had no reply to make. Chiwalo then said that he would have to pay compensation to his sister. Kanyenga, however, said that they did not want money. They wanted to go away. Cibwana Kawinga here checked Kanyenga and told him that they would take Cikoja and give him a talking to, and instruct him on the traditional way of keeping a village together.[5] Chiwalo accepted this settlement of Cibwana Kawinga and endorsed his action.

When they got back, Cilimba told Cikoja and Mbande that he wanted to move out of the village because his 'mother' had been called a sorceress by his 'brother'. Cikoja was anxious to avoid further trouble and told his lineage members that he was going to build a hut for his second wife some distance from the village because his first wife did not get on with her. He put up a hut about half a mile away across the Nanwoce stream. Cilimba (F1) who was living virilocally, his mother Bt. Ntalika (E3), Bt. Mbwana (F2),

[1] This is a reference to the ghost-motif in Yao witchlore. Cikoja here, of course, is a symbol of the whole lineage, so that this imprecation is directed toward the whole lineage and not to Cikoja personally, as in the last dispute.

[2] The father of the dead child.

[3] Mpulula had begotten eleven children. This is another reference to the ghost-motif.

[4] *Uudwa*—this word is also used to mean 'polluted'.

[5] *Kale ninwe wakwe ninti*—'the building of a village of old'.

2: Mitchell E-5 (1946-1949) 1956 FT7 Yao FT7

613
578
759

Kasai (P3), Bt. Madi (P10), Bt. Aliya (P11) and their children moved across the stream and built with Cikoja. One of Cikoja's wives stayed in the old village and the other moved across. Shortly after this Aimama (B6), Cikoja's sister, decided that she would like to move across to be with the headman. She reported to Kanyenga who sent her to tell Cikoja. Cikoja in turn sent her to tell Amida. Eventually, Cikoja, Amida, Kanyenga and Salimu (D3) had a meeting about it. Neither Amida nor Kanyenga, nor Salimu, was enthusiastic, but they said she should follow her own wishes. She moved across with her children. Aimama's arrival on the other side of the stream was greeted with some suspicion by Cilimba because she was a member of the junior lineage. However, Cikoja assured him that he wanted one of Aimama's daughters to fetch water for him. Cilimba was satisfied with this explanation and accepted the situation as it was.

It was not easy, however, and there were continual quarrels between the children of Bt. Ntalika and those of Aimama. The members of the junior segment in the old village also looked upon this arrangement with some suspicion. The friendship of Amega (P28), Aimama's daughter, with Ambiya (E9), her mother's younger sister was particularly deprecated by the members of the junior segment. Ambiya was warned several times that this friendship could only lead to sorcery.[1]

In the meantime, Salimu (D3), who will be the next Cikoja and who was the senior lineage member in the old village site, undertook most of the duties of the headman in that section. He settled most of the minor cases and saw to the divining. However, he reported his doings to Cikoja who was still the village headman.

In 1948, another death took place and the tension became evident again. Bt. Ntalika's child died. Kasai (P3) and Jasma (P7) went to the diviner, who revealed that Amega had gone to Salimu to grumble about what was going on in the other village, and Salimu had taken this opportunity of bewitching the child. Cikoja refused to accept this explanation and said that the diviner was a liar. When the body was being washed, a knife was found under the mat on which it was lying, and the story went around that a piece of flesh was taken out of the dead child's buttock.[2] Cikoja interpreted this as meaning that Bt. Ntalika herself had bewitched the child. He felt it unnecessary to call a funeral meeting. Shortly after this there was some friction between Amina and her younger sister Ambiya, arising out of jealousy because of the difference in their harvests. Bt. Amina was convinced

[1] This is based on the fear of backbiting. See p. 158.

[2] Once a person is dead the matrilineal relatives do not touch him. They leave the hut and the undertakers (*ahile*) wash the body and prepare it for burial. They reported this finding to Cikoja.

764

2: Mitchell E-5 (1946-1949) 1956 FT7 Yao FT7

that Anthiya in her jealousy had gone to grumble to Bt. Ntalika about this. Rajabu (Fat) who had heard about this called Cikuja and they assembled Bt. Amina, Bt. Bwana Isa and Anthiya in Bt. Amina's hut, and spoke to them about the dangers of backbiting. Cikuja remonstrated with the women saying, 'I don't want to hear about this again. When you love people do not love people who are strangers. Do not talk behind people's backs and bring war in the knees of your body-cloths.' 613 578 754

A few weeks after this, in June 1948, Alewinda (Fat), a 3½-year-old daughter of Anthiya, died. When her mother saw that the child was seriously ill she took her to her patrilateral relatives in Liwonde area. She had barely got there when the child died. The headman of the village sent a message back to Cikuja to tell him of the death. He in turn sent a message to Amida and Rajabu and they went to the village to attend the funeral. After the first mourning feast three days after the funeral, Kaifa, the child's mother's elder sister's son, and Malewaga, representing the village in which the child had died, went to a diviner who indicated that the cause lay in the backbiting of Anthiya about Bt. Amina, but that the sorcerer was Bt. Ntalika. The tension now had reached almost breaking point and after about six months Bt. Ntalika moved out into Liwonde area without announcing that she was going.

At the end of December, Anthiya's son Selemu (Fat), aged 4½, suddenly became ill one night. In the morning Amida and Rajabu and Nkatawila (Dat), who was the husband's marriage survey, went to a diviner. He indicated that the cause was a girls' initiation basket which Ayesi kept. This basket, the diviner said, kept losing its strength and it was only on the death of a close relative that it would regain power. They returned and when they got near the village they could hear the women keening. They agreed that the diviner was a liar and returned and got their money back. The body was buried on January 3rd, 1949. Anthiya now left the village without announcing her intention and went to complain to chief Kawinga. Cikuja in the meantime, noticing that Anthiya was not present at the funeral, sent out men to search for her. After two days Kawinga's chief court usher, Mazunda, brought Anthiya back to the village. He told Cikuja that he had cross-examined her and found that she said her elder sister was causing death because of her jealousy over the food. Mazunda returned and some days later Kawinga wrote a letter to Cikuja telling him to come to the court village. This he did and was told to hold the mourning feast, but to take the people to the court village to hold the funeral meeting. There a divining party would be arranged and the cause of the death determined. 613 578 754 615

After the first funeral feast the people of Cikuja assembled at

2: Mitchell E-5 (1946-1949) 1956 FT7 Yao FT7

653
578
754
695

Kawinga's court village. Mazunda reviewed the events leading up to the calling of the meeting and asked Cikoja to give his statement. Cikoja replied, 'You say I am finishing the people. I do not deny it. If the people are being finished by my sister, then I am finishing them.' You may speak what is in your hearts.' Anduya now made her statement. After this, Bt. Amina was called out. She denied knowing anything about the case. Mazunda at this point was about to send the case back to Cikoja when Matowa, a second arbitrator, asked who the marriage sureties were. Amida came forth as the woman's surety. Matowa asked him to tell the court about Anduya's marriage relationships. Amida then reviewed the history of Anduya's pregnancies. He pointed out that the first child had died.[1] The second one also died. The diviner had indicated that she had broken a sexual taboo and the child had died from *ndoka* as a result. The third child was still alive. The fourth had died recently. The fifth was the one about whom there was a case that day. He recounted how they had gone to a diviner and how he had indicated that the cause of the death lay in the backbiting which the person herself had done. Mazunda cross-questioned Amida about the *ndoka* medicine that was given and assured himself the complainant was satisfied that the second child had died of *ndoka* and not sorcery. Mazunda then called Salima since the woman was living at the old village site under Salima's charge. Salima, who works as a tailor in an Indian store some miles away, said that he did not have a great knowledge of the case. Cikoja said he had nothing to say. Eventually, after some hours of cross-questioning, Mazunda decided that a divining party must be made up and the results of the divination reported to the court. Bt. Amina now stood up and said she was prepared to undergo the poison ordeal to prove that she was not a sorceress. She said that she would go with them to the diviner to find out the cause of the death of the child. Mazunda said that they would leave the matter at that. At the village they would have to decide on a divining party and they would have to give poison to a chicken to make sure that the divination was correct. After that Cikoja would have to report the matter to Kawinga and the case would be re-opened. Nyonje was at the inquest and said to Cikoja that if they were not relatives he would have other words to say to him about this business. As it was he did not see what he had to rejoice about. Cikoja said that he did not know, but that Nyonje should ask the owner of the village. Surprised, Nyonje said, 'Who is that?' Cikoja indicated Salima.

[1] Cikoja is talking as a representative of his lineage here.

[2] The first death in a family is never divined for, because the Yao say that if this is done, it 'would chase the father away'.

2: Mitchell E-5 (1946-1949) 1956 FT7 Yao FT7

Salima said that Cikuja ought not to speak like that because it only made things difficult.

Two days after this Cikuja called a meeting at Salima's hut in order to choose a divining party. Eventually they chose Kanyenga, Aimanna, Raisi and Mana. Mana was the witness for Kanyenga who represented the woman's party. Raisi represented the father's party, and Aimanna went to be his witness. Cikuja gave them 3s. and they went to look for a diviner. Eventually they found one and Kanyenga opened the consultation. The diviner indicated that the cause of the death of the child was *linkula*.[1] The party paid him and looked for a place to sleep. The following day they sought another diviner. Kanyenga again consulted and was told that Bt. Nzalika and her son were sorcerers but that the mother herself was ill with *linkula*. Kanyenga rejected the *linkula* explanation and insisted on the sorcery of Bt. Nzalika and Cilimba. The diviner consulted again and said that the main cause of the death was the *linkula* and that the sorcery of Bt. Nzalika was added to the other. Aimanna here insisted that the sorcerer in reality was Bt. Amina. The diviner rejected this. He said the best way to test the divination was to give poison to a chicken. The party was at a loss to know what to do. In two divinations, a *likanga* was indicated twice, while sorcery was said to cloud the issue. They decided to give a chicken poison. They returned to Rajabu's hut in the village where he had married. Here they sent Rajabu to tell Salima that they were about to test a chicken at the poison ordeal, but that he must not tell Cikuja. They gave two chickens poison, one for *linkula* of the mother and one for the sorcery of Bt. Amina. The *linkula* chicken died, indicating that Bt. Amina was innocent. When Cikuja was told this he refused to believe it and sent them to poison another two chickens. The result was the same. He now decided that he would take the divination to a distant place and chose to go to Ngokwe chieftown. Kanyenga led the divination party again. They consulted the diviner and after much testing and crowing the diviner decided that the sorcerers were Bt. Nzalika and Cilimba and that the *linkula* had nothing to do with it. He also specifically excluded Bt. Amina. The diviner now told the father's two representatives to stay behind while the woman's representatives fetched Cikuja. When he came, the diviner revealed the result to him personally. Cikuja was at a loss what to do in this situation. Two divinations including poison tests had indicated that *likanga* was the cause, a third and very exhaustive one had revealed Bt. Nzalika and her son. Neither had indicated Bt. Amina.

[1] *Linkula* is a type of pimple (the generic term for which is *likanga*) which, when it comes to a head and bursts, causes the death of the last-born child.

2: Mitchell E-5 (1946-1949) 1956 FT7 Yao FT7

●613 578 759 685 Eventually, in March, he decided to take the case up to Kawinga's court. Cikoja was not willing to accuse Bt. Nsalika and Cilimba publicly. Accordingly he went to Kawinga but he did not send for Bt. Nsalika. When Mazunda, the court secretary, heard this he refused to handle the case and told Cikoja that Bt. Nsalika had to be brought to court so that they could hear her statement. Cikoja and his people came back to the village and nothing more was done about it. In April, Rajabu wrote a letter to Cikoja telling him that he wanted to report him to Kawinga and to bring a charge for compensation against him because he had falsely accused his mother of sorcery.

I left the field in June and do not know what the result was.

The series of events are extremely complex. I have given only a summary of them. Nevertheless, the main themes in the history are clear enough. We see Cikoja as the representative of the lineage of any order whatsoever. We find in particular the opposition of the two collateral brothers, Kanyenga and Cilimba. They are the representatives of the two lineage segments in this situation. There is seldom any doubt about the affiliation of these two personalities. Consistently in the accounts of the divinations each rejects the diviner's finding if it accuses a member of his lineage segment. Note that the divination sessions itself becomes a field in which the opposition of the segments is expressed. Kanyenga continued consulting diviners until finally he got the answer he wanted. His opponents rejected these findings and eventually even discounted the chicken ordeal. The diviners' findings and the results of the poison ordeals, therefore, are bandied about between the opposed groups, and though the whole procedure of divination and accusations of sorcery is directed towards the extirpation of disruptive elements in the community, in fact, it is only a facet of the underlying cause of the tension—the opposition of segments in an ever-segmenting lineage.

613 578 In addition to the structural opposition of Kanyenga and Cilimba there is a certain amount of tension among Cikoja's uterine sisters. Bt. Amina, Aisiamu, Ayesi and Andaya have all had children. Bt. Amina is the senior and the relationships between her and any of the other sisters are difficult. In addition to this there is the tension between the generations seen in the attempts of the sons of Amina to bring a compensation claim

2: Mitchell E-5 (1946-1949) 1956 FT7 Yao FT7

against Cikoja himself. It is important that not once is a member of the junior major segment, that is a descendant of Cinileka (A2), involved in the dispute. Only the descendants of Atabiya (D1) and Amdiama (D2) are involved, with the exception of Salimu who appears as the representative of the villagers on the old village site.

The Opposition of the Generations

Segmentation arises as more and more sorority-groups, the daughters of women, reach adulthood, and as the sons of the same women become old enough to undertake responsibilities for the care of the women. There is, in this situation, a fundamental opposition of generations. A woman is bound to her own sisters and at the same time she is bound to her daughters. These bonds come into conflict when her daughters want to express their unity against their mother's sister's daughters. The mother must decide whether she will go with her daughters to their new village site, or whether she will stay with her sisters and possibly with her own brother. I found consistently that a mother seldom stayed in a village when her daughters were moving out of it. The bond with her children is stronger than that with her sisters. Yet the conflict is clearly present. It finds expression in the kinship terminology. A daughter is usually identified with her mother's mother. A woman's daughter's daughter inherits her name, her position and her property in much the same way as a man succeeds his mother's brother.[1] When this has taken place the terms of address of her parental generation are now reversed. In other words her mother's brother instead of calling her, 'sister's child' (*ciyowe*), calls her 'mother' (*mmae*). Sometimes the qualificative *wamunje* ('who has returned') is used to signify the difference. Her mother's mother's husband even before the succession has taken place calls her 'my wife', and I have recorded one or two marriages between a man and his wife's daughter's daughter. A man's daughter's daughter must also perform some of the funeral rites for her grandfather after his wife has died.[2]

We have among the Yao, therefore, the familiar principle of

[1] See Chap. V, p. 121.

[2] She cooks the ritual meal which he eats at the end of mourning to protect himself against ukubo. Here she visually fills her mother's mother's place.

2: Mitchell E-5 (1946-1949) 1956 FT7 Yao FT7

the identification of alternate generations; and this is particularly significant when we realize that the tension between the filial and parental generations is most likely to find expression in the situation where a group of young adult women wish to leave a village, and their mother, if she is still alive, must make up her mind whether to stay or to follow them.

The existence of rules of succession for men, different from those for women, presents an interesting analytical problem which I have not yet fully explored. Clearly men must succeed to positions in the first ascending generation, for they are the active leaders in Yao society and those who are to succeed must be sufficiently mature to take over the responsibilities of leadership. Women, on the other hand, are usually not leaders so that succession to positions in the second ascending generation involves no difficulties. A young woman may take her mother's mother's name without involving any responsibilities of leadership. Yet the interaction of the two systems of succession presumably has some reaction on the social structure. A man's sister's daughter who succeeds to her mother's mother's position becomes the man's mother and the man's mother's brother's sister. The man's own sister becomes his mother's brother's mother.[1] The effect of this presumably is to achieve some balance of power between a man and his mother's brother. By the rule of succession for women, a man's sister to whom he is tied by the closest possible ties of kinship, and on whom he is dependent for political success, becomes his mother's brother's mother, so forming a common link between two potentially opposed persons. By the same reasoning a man's sister's daughter who is part of his sorority-group and who is likely to desert her mother's mother's brother to go with her mother's brother if there is a conflict, by succession becomes the sister of her mother's brother's mother's brother, so forming a unifying influence within the lineage. This problem emerged after my fieldwork was completed so that I have no evidence to support these suggestions.

Among the men, because of the struggle for political power, the opposition of alternate generations is much stronger than among women. This emerges most clearly in the institution of marriage sureties.

The duties of the marriage sureties towards their wards are

[1] I am grateful to Prof. Gluckman who pointed this out to me.

2: Mitchell E-5 (1946-1949) 1956 FT7 Yao FT7

part of the normal duties of a matrilineage leader to his kinsmen.[1] But ideally each marriage is supposed to have two marriage sureties. The first, or senior, surety is called *mkokowogona*, which was described to me as 'the log that lies at the doorway'. The picture here is of a wise old man who cannot move around too easily, but who sits at the doorway of his hut ready to give advice and information to his younger kinsmen. In contrast to this is the junior surety. He is called *mkuyamowe* or the 'hoeing down of dew'. He is pictured as a young man, who is vigorous about his daily tasks and who is waiting before the dew has evaporated in the morning, at the door of couples who have difficulties. He is essentially the 'one who walks about'.

The senior marriage surety is ideally supposed to be a mother's brother, while the junior marriage surety is supposed to be a brother. In fact, while the junior marriage surety is almost always a brother, though not necessarily an elder brother, the senior, for reasons which will emerge later, is frequently not a mother's brother. However, in the Yao mind the two are fused in the relationship to each other as mother's brother and sister's son. The fundamental conflict of their positions is expressed by the opposition of the concepts of the 'recumbent log' and the 'active man'. This view is consistent with the segmentation and internal differentiation that must go on within a lineage. As the segments of the matrilineage become progressively independent of each other, the senior relatives, who formerly held them together, become less and less active in their affairs. In Yao idiom they become 'recumbent logs'.

The relationship between mother's brother and sister's son therefore is fundamentally ambivalent. By the values surrounding the concepts of descent and relationship, a sister's son and mother's brother are close kin and bound together in their attachment to a common ancestry and to a common set of living women who are in their joint care. At the same time the mother's brother, belonging as he does to the parental generation, must be respected by his sister's sons. Recalcitrant sister's sons may be made to toe the line by a number of different sanctions. A mother's brother, for example, may take his case to an arbitrator and bring the force of public opinion to bear upon his

[1] I have described the ritual of the marriage sureties more fully in *Marriage among the Matrilineal Yao*.

2: Mitchell E-5 (1946-1949) 1956 FT7 Tao FT7

him. The woman in the meantime had run to Chiwale's but half a mile away. Here she complained to the chief that Mwanace wanted to kill her. Chiwale refused to listen to her complaint and sent for Ali Kasunka. When he had come and explained the sequence of events, he continued saying that he would like to take the case to court. Chiwale, who was Ali Kasunka's wife's father's sister's son (hence a classificatory younger brother) and whose headman Ali Kasunka was, refused to arbitrate in the case but referred it to Kawinga. On the day of the case the woman's husband came back from the Army. The case was tried and eventually the court assessors awarded a damages claim of £5 to be paid by Mwanace to his sister. The husband, at the same time, said that he could not remain married to her because whenever he saw her he would think that she had slept with her brother and in court he gave Ali Kasunka a marriage termination payment. The tension between Ali Kasunka and his 'sister's son' did not end there however. When they got back to the village Ali Kasunka remonstrated with Mwanace saying, 'Are you not ashamed to have married your sister?' Mwanace said that he could not stand that sort of thing and went back to live uxorilocally.

A crucial point in this case history is that the women did not like Mwanace. Almost certainly there would have been a split in the village had the women had more confidence in Mwanace. The tension between Ali Kasunka and Mwanace, although the conflict is inter-generational, started, as it commonly does, from the relationship of a man to the women of his matrilineage. Without the support of the women, younger brothers or sister's sons are impotent against the power of their senior relatives. It is only when they can induce the women to follow them and to leave their circle that they can found a new village and thereby begin to earn prestige. Therefore, although the men are the active agents in bringing about a physical act of fission, they are in fact only making manifest a situation which is latent within the lineage.

The position of the senior male matrilineal relative is of fundamental importance in questions involving succession. His position is seen most clearly in the dominant matrilineage, in which the name of the village is inherited. The Yao practise 'positional succession'. A man not only succeeds to his mother's brother's name but also to the position of the mother's brother in the social structure as a whole.[1] It follows that when the

[1] See Chap. V, p. 121.

613 621 successor takes over the name of his predecessor, he assumes the position in the structure of the village as a whole, which was occupied by the first of that name. For example, when Cikuja VI succeeded to the name he moved to the position of Cikuja IV (who founded the village), as far as the members of the village were concerned. He is therefore the senior male matrilineal kinsman in the dominant lineage in the village, and Salima, in spite of being more senior by generation, must call him mother's brother. The man who succeeds to the name of the founder of a village, or to the name of any important matrilineage member, therefore represents its maximum span to the members. From one point of view he is founding ancestor of the dominant lineage and is, therefore, lifted above the conflicts of the component sections; but from another, since he represents all other sections to any one segment, he is involved in all the conflicts. Cikuja, for example, is the senior marriage surety to all the members of the dominant matrilineage in his village, while the junior marriage sureties are drawn from the component lineage segments. In this way he unites the dominant lineage in that all difficulties are brought to him by the junior sureties. But the junior sureties accuse Cikuja of being a sorcerer when they see him as a representative of an opposed section. Whatever the degree of segmentation within a matrilineage, he is still a mother's brother to them all, and all the component segments are united through him. This is a concept aptly figured in the synonym for a senior matrilineage member, a village headman, or a chief *chungu* — a bundle of grass; that is, a person in whom many different members are bound into one.

2: Mitchell E-5 (1946-1949) 1956 FT7 Yao FT7

CHAPTER VII

THE PATRILATERALLY-LINKED GROUPS

The Position of the Husband and Father

MATRILINEAL descent provides the principle on which the smallest of villages, the hamlets, are organized. But not all villages are made up of huts owned by members of one matrilineage as in Ali Kasunka's village.[1] Most villages in fact have a more complex internal organization which may be epitomized as a dominant matrilineage which carries the village headmanship, and a number of subsidiary lineages linked to the dominant lineage by various means. The most common of these is the patrilateral link whereby the subsidiary lineage is connected to the dominant lineage through one of its men.[2] The subsidiary lineage develops in the village from the matrilateral descendants of the virilocally-married wife of one of the men of the dominant lineage, so that the subsidiary lineage, initially at least, are the 'children' of one of the men of the headman's matrilineage. Their peculiar position in the village must be seen in the light of the general position of the father in Yao society.

The father, obviously enough, is also a son-in-law; obvious as this may seem in English it is charged with meaning for the Yao. When parents-in-law refer to their daughters' husands they use the term *akwepwe*; and they in turn are called this by their sons-in-law. But the *akwewini* are essentially men who are living uxorilocally and *akwewini* is the general status of being a man in uxorilocal marriage. *Mkwewini* thus cannot be translated into English without periphrasis and I translate it merely as 'husband'. I emphasize, however, that wherever I speak of *husbands* or the *husband* in general I mean 'husbands in uxorilocal marriage'. The Yao assume that marriages as a rule are uxorilocal. Usually the young husband builds a house in his wife's village and is expected to live there for the rest of his life. But

[1] See Chap. VI, pp. 140-1.

[2] I have called this type of village structure the 'theory' in my earlier essay, 'The Yao of Southern Nyasaland', *Seven Tribes*, 332 ff.

2: Mitchell E-5 (1946-1949) 1956 FT7 Yao FT7

613 he cannot escape the fact that in his wife's village he is only
593 a 'billy goat' and that his 'true home' is in his matrilineal
606 village. The pull of the matrilineal village on him, therefore,
591 is always very strong and he is constantly trying to return there.
621 His wife's responsible relatives are constantly trying to avoid this because they know that in time they are likely to lose the children who will probably settle in their father's village if they grow up there. In general, therefore, a husband must have a very good reason before he can get his wife's kinsmen's permission to take her and her children to his village. His wife's relatives do not easily yield. But a headman must live in his own village so that nearly all headmen bring at least one of their wives into their villages. Other men sometimes succeed in doing so especially if their wives are past child-bearing, but it is typically the headman's wife who lives virilocally.

621 The husband's interest in returning to his matrilineal village
591 is heightened by the fact that a man in his wife's village is looked
559 upon as the typical man without prestige: a stranger, whose duty is largely procreative. The theme song at the installation ceremony where the husband was compared with a billy goat, and the common epithet 'chicken rooster' for a husband, reflect the attitude of the Yao towards him. In the song I quoted, the husband was said to be unable to climb high in his village of marriage, however rich he may become.[1] He is, nevertheless, an essential member of the village and the Yao say that it can succeed neither economically nor physically without his aid.

A husband becomes more important when he stays in a village for a long time. He becomes known intimately to the villagers and is conversant with their affairs. He is, therefore, able to advise on many private intra-lineage and intra-village affairs and may even become a marriage survey if there is no more suitable person available. Also in time the husband's position in the village changes. As his children grow up and become active members in the matrilineage, his position of husband becomes supplanted by his position of father, which, in a matrilineal society like that of the Yao, is significant in the same way as that of the mother's brother is in patrilineal societies.

593 The Yao recognize the close bond between father and child.
90 This bond is conceived to be both social and physical and is

[1] See Chap. V, p. 119.

2: Mitchell E-5 (1946-1949) 1956 FT7 Yao FT7

593 economic responsibility of all the woman's children, regardless
586 of whether he has begotten them or not. For example, gossips say that a woman married my clerk so that she could have her son initiated. The costs and fees for this boy's initiation amounted to over a pound.

593 The other set of rights that paternal recognition confers on
602 the child are the moral rights against his paternal kinsmen. A person may turn to his 'father's people' (kwitset) in times of dire need, especially if one of them is rich. This right persists after divorce, though the children are adult and otherwise economically independent. For example, a woman who was married to a labour migrant needed clothes badly. She turned to Chiwalo her father, though he had been divorced from her mother for more than 15 years. People in trouble often run away to their father's village and find shelter there. A man who wanted medicine for success in gambling asked his father for it. Another who had broken a sexual taboo confessed to his father who found suitable medicine for him. In each of these relationships there was an intimate personal element.[1] A person has the moral right to appeal to his father or paternal kinsmen, but he has no legally enforceable right to demand help. He has to rely on their kindness and charity. There are few fathers who would deny their children's requests if they are reasonable, but they can if they wish to.

593 The divorce rate is high among the Yao[2] and a typical family
586 of five uterine siblings may have three fathers. Furthermore, a
613 man should not marry into the lineage segment where his brother has married, so that the patrilateral kinship ties of the members of matrilineages tend to spread widely in the vicinity of the village. The effect of this is that the members of the lineage as a whole have widespread connections with neighbours upon whom they may rely in times of distress. But of the individual members of the matrilineage only a few share the same group

[1] Compare Firth's description of uterine kinship among the Tikopia: '[It] is essentially by a personal bond, a bond of mutual interest and concern existing individual to individual', *We of Tikopia*, 37.

[2] Eight of every ten men and women over the age of 40 have experienced a divorce at some time of their lives. Excluding the contingency of death a married couple have only 50 chances in 100 of living together for 10 years. For details, see *Marriage among the Machinga Yao*.

2: Mitchell E-5 (1946-1949) 1956 FT7 Yao FT7

of patrilateral kinsmen, so that these bonds are personal and distinctive for each member.

The Development of the Corporate Identity of Patrilateral-linked Groups

The parent-child relationship is reflected in the structural relationships of a patrilateral group to the dominant matrilineage. Children are less strongly tied to their father than to their matrilineal kinsmen. Usually when a woman dies or is divorced while living virilocally, her children return to her matrilineal village. If the children are too young to express their own wishes, their mother's brother comes for them and they are formally returned to their village of origin. Occasionally children who have grown up in their father's village, especially if they have married their cross-cousins there, refuse to move back to their matrilineal village. They prefer to remain in their father's matrilineal village where they know people more intimately. In time, as they grow older, the women have daughters who may marry uxorilocally and thus a section of a foreign matrilineage begins to develop in the village.

The village as a social unit is more closely integrated when the children who are living there with their father are still young. They do not yet form a corporate group within the village. Their affairs are supposed to be controlled by their mother's brother, but in fact the headman, who is usually their father or a paternal kinsman, may settle many of their minor difficulties and find medicine for lesser illnesses, without bothering their mother's brother. When the children become adults and begin to assert their own wills the position in the village becomes more unstable. As the daughters grow up and marry, their brothers become their junior marriage sureties. If the mother's brother lives far away, the father of the children may be the senior marriage surety. He still has a personal attachment to his children, but his social relationships with him may now become affected by structural elements as they tend to interact, with him and others, in certain situations as representatives of corporate groups. As the village develops a son takes over the position of senior marriage surety to the headman's wife's descendants and he becomes the senior male lineage member, while his sisters' sons begin to take over responsibilities for their sorority-groups.

583 The headman and father is now no longer directly concerned
613 in the affairs of the linked lineage, and may only appear in their
621 affairs formally as an adviser or an arbitrator in disputes. For example, he is advised of deaths in the village and of the disputes that have arisen and been settled. But this is part of his relationship to the linked lineage because of his headmanship. A fairly long-established village, therefore, contains two, three or four related lineages with complete autonomy in internal affairs yet together forming one community—one village under the leadership of the headman. As the village persists in time and successive village headmen and other men of the dominant matrilineage bring their wives into the village, related lineage segments develop from them, and the internal structure of the village becomes more and more complex.

613 An example of a village of this kind is Cikoja. It has 47 huts.
621

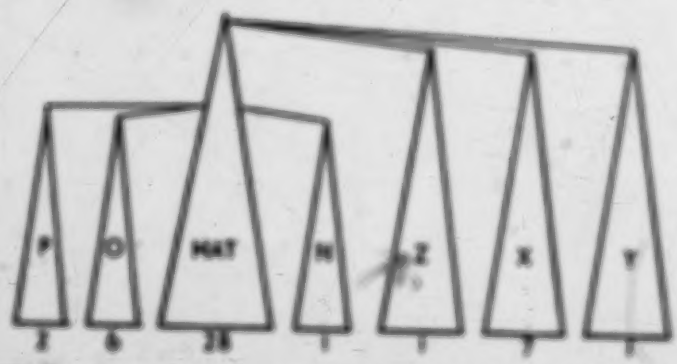

Diagram 4. The Ownership of Huts in Cikoja Village.

One of them is a dormitory for adolescent boys and we may ignore it in this analysis. Members of the dominant matrilineage live in 28 of the huts. Members of patrilineally-linked groups are living in the remaining 19 huts. There are 6 of these patrilineally-linked groups in the village and I have indicated them by the letters N, O, P, X, Y and Z. Their origin is as follows:

Z A descendant of Cikoja IV's first wife . . . . 1 hut
X The descendant of Cikoja IV's second wife . . . . 7 huts
Y The descendant of Cikoja IV's third wife . . . . 1 hut

2: Mitchell E-5 (1946-1949) 1956 FT7 Yao.FT7

N A descendant of Cikoja V's first wife . . . . 1 hut 613
O The descendant of Cikoja V's brother's first wife . . . 6 huts
P The descendant of Cikoja V's brother's second wife . . . 2 huts 621

All these wives were slaves. The present Cikoja has no children.

In this table I have counted huts owned jointly by a member of the dominant matrilineage and a patrilateral group (i.e. in cross-cousin marriage) as belonging to the matrilineage; huts belonging to Z and X group as Z, etc. The exact ownership of the huts is set out in Table XXVII. It shows the number of

TABLE XXVII

OWNERSHIP OF HUTS IN CIKOJA VILLAGE

Origin of wife:	Origin of husband: Mat.	Z	X	Y	N	O	P	Outsid.	Wid.	Div.	Total
Mat. .	—	1	2	—	1	—	—	23	1	1	31
Z . .	—	—	—	—	—	—	—	1	—	—	1
X . .	1	—	—	—	—	—	—	7	—	—	8
Y . .	1	—	—	—	—	—	—	1	—	—	2
N . .	2	—	—	—	—	—	—	1	—	—	3
O . .	—	—	—	—	—	—	—	3	—	2	5
P . .	—	—	—	—	—	—	—	1	1	—	2
Outsid.	1	—	—	—	—	1	—	—	—	—	4
Wid. .	—	—	—	—	—	—	—	—	—	—	—
Div. .	—	—	—	—	—	—	—	—	—	—	—
Total	7	1	2	—	1	1	—	39	2	3	46

Mat. = Member of the dominant matrilineage.
Z, X, Y, N, O, P = Groups linked patrilaterally to the dominant matrilineage.
Outsid. = Outsiders or members of other villages.

men and women in the village who are married either to spouses from other villages or from this village, and the men and women who own huts but who are widowed and divorced. The distribution of these huts is set out in the village plan in Appendix D.

We have already seen that the social distance between sections of the matrilineage is reflected in the physical separation of their huts.[1] The social distance between the dominant matrilineage and the patrilaterally-linked groups is much greater than between

[1] See Chap. VI, p. 160.

2: Mitchell E-5 (1946-1949) 1956 FT7 Yao FT7

613 621 sections of a matrilineage, and accordingly the huts of members of the dominant matrilineage are physically separated more distinctly from the huts of members of the patrilaterally-linked groups than from one another. As they develop their corporate identity the members of each matrilineage tend to build together and a little distance away from the main settlement of the other matrilineages. In Cikoja's village this tendency is seen quite plainly. There are two large patrilaterally-linked groups in the village. These are the children and matrilineal descendants of Cikoja IV's second wife (represented in the plan as N), and the children and matrilineal descendants of the first wife of Mapeyera, the brother of Cikoja V (represented in the plan as O). These two groups are situated quite separately from the main matrilineal block of the village. The huts of X matrilineage are hidden from the view of the rest of the village and must be reached by a path. The space between huts of O matrilineage and the remainder of the matrilineal block is clear, but in it there are some large trees and the grave of Cikoja V. The huts of the three women and the one man of N matrilineage are close together in the village but scarcely distinguishable from the huts of the main matrilineage. The huts of two women of Y matrilineage are set on the extremity of the village and are not yet separated from the huts of other lineages. Note how the huts of the villagers who have married their 'cross-cousins' are placed within the village as a whole. Huts 32 and 33 belonging to the two women of X lineage have been placed between the main block of the X matrilineage and the matrilineage of Jauma (Ma_1), who is married to one of these women. Huts 10 and 11, where members of the dominant matrilineage and the patrilaterally-linked lineage N have intermarried, are placed on the mutual fringe of these two groups. The three men of the patrilaterally-linked lineage X who are married into the dominant lineage form a little block in the north-western corner of the village. As soon as the patrilaterally-linked groups develop their identity and are able to express their autonomy, they tend to build in separate sections and to form corporate but component parts of the village.

603 582 One of the clearest ways in which the autonomy of the matrilineage is expressed is in the arrangements made about marriage matters. In Cikoja's village, Cikoja himself is senior

2: Mitchell E-5 (1946-1949) 1956 FT7 Yao FT7

marriage surety for only one member of the linked lineages. This is Nalwa (D39), who is the oldest surviving man in all the linked matrilineages and who is looked upon as the senior among them all. Nalwa is the senior marriage surety for most of the marriages in the linked matrilineages, but Kanoli (D33) has taken over the duties for a number of his own lineage members. Table XXVIII lists the senior marriage sureties in all the

613 ●
582

TABLE XXVIII

SENIOR MARRIAGE SURETIES IN CIKOJA VILLAGE

Surety	Rel.*	Lineage Affiliation						Total
		Mat.	Z	X	Y	N	O	
Cikoja	Mat.	44	—	—	1	—	—	45
Nalwa	Y	—	—	—	3	8	13	26
Kanoli	X	—	3	11	—	—	—	14
Mbwana	X	—	1	3	—	—	—	3
Sowoli	X	—	—	1	—	—	—	1
Other†	—	1	—	—	—	—	—	1
Total	—	45	4	15	4	8	13	91

* This is the lineage affiliation of the senior marriage surety. Cikoja is the headman and automatically senior lineage member. Nalwa is the most senior surviving member of Y lineage. Sowoli is more senior to X, followed by his younger brother Mbwana and then his sister's son Kanoli.

† This is Cikoja's own marriage. His perpetual younger brother Mbundo is his senior surety.

Note: There were two marriages in P lineage for which I did not record the marriage sureties.

marriages I recorded in Cikoja village. Here, age is important. The male members in the lineage of Cikoja V's wife and of Mapenza's wives are all much younger than the members of Cikoja IV's wives' lineages. The descendants of Cikoja V's wife and of Mapenza's wives all have junior sureties from their own lineage, but so far none has become a senior marriage surety.

As time goes on, the affairs of the linked lineage, therefore, become regulated more and more within the lineage. The headman and perpetual father recedes from the picture but is never entirely obliterated even in his relation to a linked-matrilineage which moves out to found its own village.

2: Mitchell E-5 (1946-1949) 1956 FT7 Yao FT7

613 621 622 The father and headman is almost forgotten in those villages which, though founded by him, do not contain any of his matrilineage. Sometimes men who have a number of adult children move away and found small villages of their own. I have struck a few villages of this type on the outskirts of White settlement areas at Nanwera and near Zomba. The man has been a servant of the Whites as, say, an estate labourer. After ten or fifteen years on the estate he decides to stop working. Local men have probably married his daughters and he has made acquaintances with local people, while his attachment to his home village has become attenuated. Consequently, with his daughters he sets up his own homestead somewhere near the estate. He is probably both senior and junior marriage surety for his daughters' marriages, and also responsible for the welfare of his children and grandchildren. He reports serious illnesses and deaths to his wife's brother or her male uterine kinsmen, but otherwise he runs the internal affairs of his village as if he were the senior matrilineal kinsman. But as his sons grow up the sorority-group organization exerts itself, and soon his adult sons begin to take over the more arduous duties concerning the affairs of their sisters. They now walk to a sister's husband's home to tell of the husband's illnesses, or trudge for miles to find a diviner when one of the babies is ill. Their father still retains control over the village land and other important affairs concerning the village as a whole. At this stage in its history the hamlet will be known by his name. When he dies the control of the hamlet passes to his eldest son, and now it assumes once again the pattern of the ordinary Yao village. For a while it may retain the name of the father, but in due course it begins to be known by the name of the son. Gradually the father fades into the background and the son comes to the fore. Eventually, when the son dies, his sister's son assumes control over the village and inherits the name. Now there are probably some of the original headman's sons' children living in the village and forming the nucleus of a linked matrilineage. In spite of the foundation of the village as an extended family, the lineage principle soon begins to mould the village into the typical Yao pattern. It is clear from many of my genealogies in Malemia area that when villages first moved in they were made up of a man and wife and children. Now after, say, twenty years the 'extended family' pattern has com-

613 ●

plenty disappeared and we have in its place a straightforward localized matrilineage as in Ali Kasuka village. 631 632

THE HEADMAN AS THE LINK BETWEEN THE DOMINANT LINEAGE AND THE PATRILATERALLY-LINKED GROUPS

A headman's position when his own children or the children of his predecessor have started to operate as a corporate group in the village is clearly difficult. To the dominant matrilineage they are outsiders, and they are a source of tension in the more complex villages. This, in essence, is the situation about which the officiating headmen have almost certainly warned him at the installation ceremony, when they told him to beware of his wife's chatter, because it may bring about a split of the village. The headman occupies a position of jural authority over his matrilineal relatives. He has succeeded to the name of his mother's brother and is structurally the most senior matrilineal kinsman in the village. He is directly responsible in court and outside it for the behaviour and welfare of the matrilineage members. At the same time he is personally attached to his children by ties of intimacy and sentiment. Where there is a conflict between his own children and the matrilineage members he is placed in an invidious position. By legal right he should support his lineage members, by moral right he cannot spurn his children. What he tries to do as a rule is to browbeat his matrilineal relatives into submission to maintain the peace within the village. He runs the risk, however, of alienating the support of his sisters who may turn to his younger brothers and leave the village. This is what happened in Mpenda's village, as I have outlined earlier.[1] Here, it will be recalled, a quarrel started between two young girls over a pounding mortar. It spread to the mothers of the girls, who were the headman's wife and his sister. The headman tried to browbeat his sister into submission, but she immediately turned to her younger brother. The result was that the headman lost his sisters to his younger brother. 578 613 622

The way in which the two opposed groups in the village crystallize out into opposed factions cannot be more clearly shown than in the sequence of events in Mpokata village, in January 1947.

Mpokata was the headman of the village, and he had three younger brothers, Wakua, Mwiwa and Nasulaya. Ali Cikwaza, Mpokata's

[1] See Chap. VI, p. 155.

2: Mitchell E-5 (1946-1949) 1956 FT7 Yao FT7

578 adult son, went to Waluna one day and borrowed a chicken. Some
● 613 days afterwards Waluna asked for payment for the chicken. Ali
622 Cibwana took offence at the way in which Waluna asked for payment and told him so. Waluna remarked that Ali Cibwana was insolent and insisted on the payment for the chicken. Ali Cibwana now said that if his father's brother insisted on asking in this rude way he would not be paid back at all. The tempers of the two men became more and more frayed until at last Waluna threw Ali Cibwana to the ground. When Saundu, Ali Cibwana's younger brother, saw this he grabbed up a stick and came up to Waluna and asked him why he had thrown his elder brother down. Waluna had hardly time to answer before Saundu had struck him. At this Waluna's younger brothers joined in the fight. Mpakata now rushed up and started to support his sons against his younger brothers. When Mpakata's sisters and sisters' daughters, who were pounding, heard this, they took up their pounding pestles (poles about five feet long and three inches in diameter) and came running to Mpakata's younger brothers' assistance. When Mpakata saw these women coming with their poles he dashed into his house and emerged with a stick with which he defended himself. The noise and clamour had by this time attracted a number of strangers from a nearby village and they were able to pacify Mpakata's villagers. The matrilineal relatives of Mpakata gathered in one part of the village and Waluna told them they ought to leave. They decided, nevertheless, 'to say goodbye'[1] to Kaumbwe, who was a perpetual elder brother of Mpakata. Kaumbwe called in an unrelated village headman named Idi, and they held a meeting in the village the next day.

The dispute was discussed in the presence of the arbitrator. Waluna said he wished to leave the village with his sisters. Idi, however, told him that he should not do this but that they should take the matter up to Chiwalo's court. On an agreed day Mpakata and his children and matrilineal relatives went to Chiwalo's court where the case was arbitrated on by Capola who lived near to Mpakata. He found Mpakata guilty and ordered him to pay 10s. to Waluna. At the same time he told Waluna that he was not to take the female members of the matrilineage away from the village. And there the matter rested.

A village headman in Yao 'binds the village',[2] and when the village is made up of linked groups as well as his matrilineal kin,

[1] Ostensibly to say goodbye but in fact to air their grievances.

[2] *Akumwe mati.* The word *kumwe* may also mean to build. Yao houses are built by binding poles together with ropes and then filling the gaps with mud.

[342]

2: Mitchell E-5 (1946-1949) 1956 FT7 Yao FT7

the significance of this formulation of his position is clear. It is when he shows partiality that the village under him is likely to break up. If he sides with his children his matrilineal kin are almost sure to move out; if he sides with his matrilineal kin, his children are likely either to return to their matrilineal village or, if they are adult, split off to set up a village of their own. The situation is precarious for the headman and it is very difficult for him to avoid a split in the village if he cannot keep the two opposed groups at peace.

My investigations show that few villages have contained patrilaterally-linked groups through the lives of two village headmen, unless these groups were descended from slaves. When the headman dies his successor assumes his name and social rôle. He also assumes the position of father towards the remaining children, who are in fact his cross-cousins. But his relationship towards them is not the same as that of father to children. The intimate link of the blood tie has been lost and the relationship becomes formalized. As more and more headmen succeed the genealogical link between the patrilaterally-linked groups and the dominant matrilineage becomes more and more remote, and the relationship becomes more and more casual. What usually happens is that shortly after the death of the headman and father, the patrilaterally-linked group takes exception to what the new headman does or says and moves off to found a village of its own. The case history I quoted earlier [1] brought this out clearly. The new headman had had intercourse with the wives of his 'son'. The son complained to the arbitrators in the dispute that 'he should have been as a father to me, and he is not'. The result was that the son refused compensation, and moved out of the village with his sisters to build on his own. When this happens the father-son relationship between the two villages is preserved and perpetuated, but the link is entirely formal and co-operation between them is limited to mutual attendance at funerals.

Patrilaterally-linked Groups as the Legacy of Slavery

Slave-groups in a village are usually linked patrilaterally to the dominant lineage. This is because the headman who was usually the captor of the slaves kept the women as concubines. They were given quasi-child status in the village, so that their children

[1] 'The Split of Cikumba Village', see Chap. V, p. 127.

2: Mitchell E-5 (1946-1949) 1956 FT7 Yao FT7

were called *yitibula* (grandchildren) by the headman, who in turn was called *ambuje* (grandparent or master) by the slaves. The grandchild-grandparent relationship became fused with the master-slave relationship as the use of the term *ambuje* for master suggests. The slave descendants as a rule have no relatives in the neighbourhood. The Yao always redeemed unwise kin whom they found in slavery by replacing them with other slaves, usually taken or bought from the Nyanja, Ngoni or Bisa. Where there are slave-groups in a village to-day, they have frequently been bought or captured in distant places, so that their kinsmen have been unable to trace them. How much this

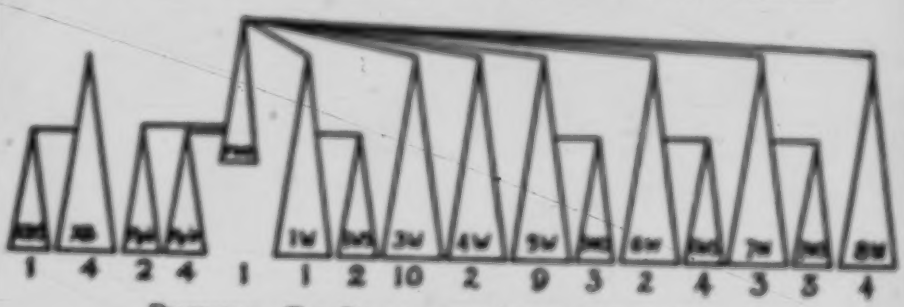

Diagram 5. The Ownership of Huts in Mpumbe Village.

has prevented slave-groups from leaving Yao villages I cannot say. Certainly before the White conquest members of a slave-group could only leave their captor's village at the risk of death. But after the White conquest it seems that many of the slave-groups left to set up their own villages. Many, on the other hand, no doubt for personal reasons, stayed with their captors in their villages, and are there to-day. In Cikoja's village, for example, there are six of these groups. Some are not very large, but only 20 of the 46 huts are owned by members of the dominant matrilineage who are not married to descendants of slaves. Eight are owned by members of the dominant matrilineage who have married slave descendants, and the remainder, 18 huts, are owned by members of the slave-groups who have married outsiders. This is a typical distribution of hut ownership. At one extreme is the pure matrilineal village such as Ali Kasunka's and at the other is the village in which the dominant lineage is barely represented. A village of this type was Mpumbe

2: Mitchell E-5 (1946-1949) 1956 FT7 Yao FT7

when I visited it in 1947.[1] The basic structure of this village is set out in Diagram 5. Here the headman[2] was the last surviving member of the dominant matrilineage. The founder of the village, his mother's brother, had thirteen slave concubines. Some of these were barren but others produced children to give this complex structure. In this village the 55 huts were arranged in 16 different affiliations. The details are set out in Table XXIX. These groups were held together by Mpumbe IV, old, blind and doddering as he was. The virtual leader of the village was his elder brother's son, a man in his late forties or early fifties. When Mpumbe died, late in 1948, the people said that it was because of the sorcery of his brother's son who wished to take over the name of the village. This led to a dispute, which ended in the brother's son's leaving to found a new village about 15 miles away. A distant sister's son, as I have said, succeeded to the headmanship, and the reduced village was reunited under this new leader.

However, this is an extremely unusual type of village as most villages, if they are not simple matrilineal groups, have only one patrilaterally-linked group living with them. The reasons for this are firstly, that if patrilaterally-linked matrilineages develop at all in the modern villages, they move out very soon after the death of their progenitor, and, secondly, that there are very few of the old slave-raiders' villages left intact.

Cross-cousin and Other Kinds of Intra-village Marriages

A most important factor in the welding of patrilaterally-linked groups to the dominant matrilineage is marriage. The tradition of cross-cousin marriage is very strong among the Yao. A person may marry either type of cross-cousin but in practice preference is given to a father's sister's daughter—i.e. the woman is married to her mother's brother's son. There is a special term for cross-cousins, *anîwani*, which is used by either male or female talking to either sex. Between cross-cousins, especially cross-sexually, there is a joking-relationship which may vary all the way from ribald joking to sexual advances. Some of my male informants say that sexual intercourse may take place between cross-cousins

[1] See also Chap. VI, p. 161, and Chap. III, p. 59.

[2] He died late in 1948 and was succeeded by a distant 'sister's son' from the village of his perpetual son, Ngongondo.

[text continues on p. 199]

2: Mitchell E-5 (1946-1949) 1956 FT? Yao FT?

613
621

TABLE XXIX

OWNERSHIP OF HOUSES IN MPUMBE VILLAGE

Affiliation of owner	Affiliation of owner: 1	2	3	4	5	6	7	8	9	10	11	12	13	14	15	16	17	18	19	20	Total
Mat.	-	-	-	-	-	-	-	-	-	-	-	-	-	-	-	-	-	-	-	-	-
1W	-	-	-	-	-	-	-	-	-	-	-	-	-	-	-	-	1	-	-	1
1W'S	-	-	-	-	-	-	-	-	-	-	-	-	-	-	-	-	1	1	-	2
2W	-	-	-	-	-	1	-	-	-	-	-	-	-	-	1	-	4	-	1	7
2W'S	-	-	-	-	-	-	-	-	-	-	-	-	-	-	-	-	-	-	-	-
3W	-	-	-	1	-	-	-	-	-	-	-	-	-	-	-	-	3	-	2	6
3W'S	-	-	-	-	-	-	-	-	-	-	-	-	-	-	-	-	2	1	-	3
4W	-	-	-	-	-	-	-	-	-	-	-	-	-	-	-	-	1	-	-	1
4W'S	-	-	-	-	-	-	-	-	-	-	-	-	-	-	-	-	2	-	-	2
5W	-	-	-	-	-	-	-	-	-	-	-	-	-	-	-	-	-	-	-	-
5W'S	-	-	-	1	-	-	-	-	-	-	-	-	-	-	-	-	3	-	-	4
6W	-	-	-	-	-	-	-	-	-	-	-	-	-	-	-	-	1	-	2	3
Myii	-	-	-	-	2	-	-	-	-	-	-	-	-	-	-	-	-	1	1	4
Myee	1	-	-	-	-	-	-	-	-	-	-	-	-	-	-	-	3	-	1	5
XB	-	-	1	-	-	-	-	-	-	-	-	1	-	-	-	-	-	1	-	2
XBS	-	-	-	1	-	-	-	-	-	-	-	-	-	-	-	-	-	-	-	1
Out.	-	-	-	-	-	2	-	1	2	3	-	1	-	-	-	1	-	-	-	10
Div.	-	-	-	-	-	-	-	-	-	-	-	-	-	-	-	-	-	-	-	-
Wid.	-	-	-	-	-	-	-	-	-	-	-	-	-	-	-	-	-	-	-	-
Total	1	-	1	3	2	3	-	1	2	3	-	2	-	-	1	1	25	6	6	55

Notes. This table is on the same principle as Table XXVII. Here 1W stands for the matrilineal descendants of Mpumbe I's first wife, 2W'S for the matrilineal descendants of his second wife's son. Myii stands for the matrilineal descendants of Mpumbe II's wife, and of course if she is alive she is included in the group. XB are the descendants of a classificatory brother of Mpumbe I. I am uncertain of his exact genealogical relationship to Mpumbe I. There are two huts not in this table. Hut 23 is occupied by Mpumbe II's late daughter's husband. Instead of moving back to his matrilineal village, this man has brought another woman into Mpumbe's. Hut 16 is occupied by the widow of Capela (Mpumbe I's 23) and she has had no children.

In a village as complex as this the classification of the ownership of huts becomes arbitrary. Because of the amount of intermarriage between the component lineages most individuals can trace their descent from Mpumbe I by two or three lines. Here I have classified people into lineages by matrilineal descent as the first criterion. I have classified them into groups after that by one patrilineal link rather than by two, etc.

601 A person calls his father's mother's brother's daughter and father's
605 father's sister's daughter, 'mother'; his father's mother's brother's son or his father's father's sister's son, 'mother's brother'. Diagram 6 illustrates this. This is consistent with the assumption that each parent has married his cross-cousin.

56 Conversation with informants gives the impression that cross-cousin marriages are very common. They say, for example, that every man's first marriage ought to be to his cross-cousin. But in fact, of 103 first marriages, only 13 per cent were to real or classificatory cross-cousins, though 21 per cent were to other types of kinsmen. Marriage to other types of kinsmen are loosely called cross-cousin marriages, and often what has been called a cross-cousin marriage in conversation turns out to be marriage to a cross-cousin's daughter or something similar. This may be the reason why casual conversation leads one to imagine that cross-cousin marriage is so frequent.

601 But cross-cousinship is particularly significant when seen in
605 relation to village structure. Typically, villages, if they are not
613 built around a simple matrilineage, are composed of a dominant matrilineage and one or more lineages linked patrilaterally to it. Sometimes there are groups in a village which are connected by a patrilateral link to a matrilineage which is in turn linked patrilaterally to the dominant lineage. In other words, there are some lineages connected by a double patrilateral link to the dominant lineage. But this is not common. These linked groups have arisen because one or more of the men of the dominant lineage have brought their wives to live in their village. The set of kinship terms applied to members of the linked lineage by members of the dominant lineage are shown in Diagram 7. We have already seen that Ego, whether man or woman, calls his or her mother's mother's brother's son or daughter 'father' or 'female father'. This usage is consistent with the assumption that one's mother ought to have married her mother's brother's son so that the mother's maternal uncle's son should be called 'father'. On the same reasoning, one's mother's mother's brother's daughter should be one's father's sister and the appropriate term 'female father' is accordingly applied. Because uxorilocal marriage is the custom, Ego's mother's mother's brother's son marries out of the village and his children belong to another lineage. The children of Ego's mother's mother's

2: Mitchell E-5 (1946-1949) 1956 F77 Yao F77

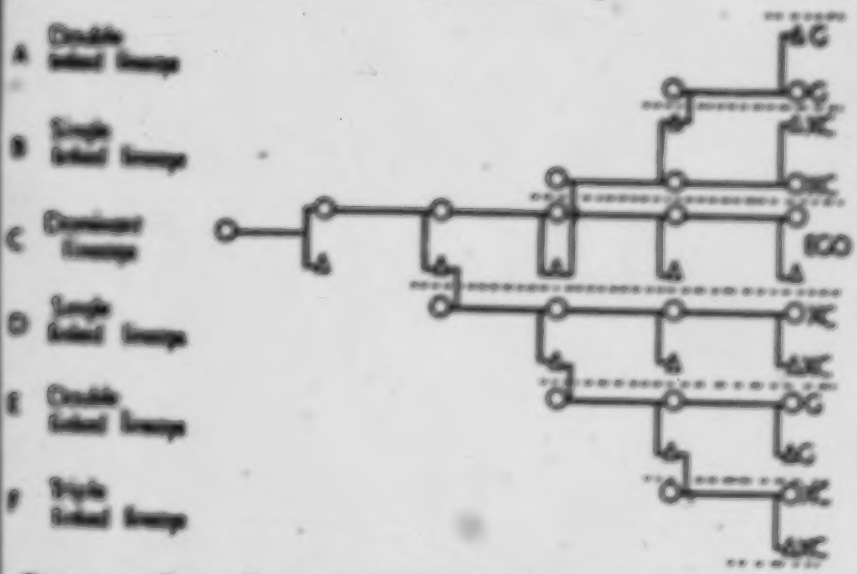

DIAGRAM 5. KINSHIP TERMS BETWEEN DOMINANT LINEAGE AND PATRILATERALLY-LINKED GROUPS.

brother's daughter, however, are members of the linked lineage and they are called 'cross-cousin' by Ego and members of the dominant lineage in Ego's generation. The children of 'cross-cousins' are called 'my children'. Hence, Ego and those in his generation in the dominant lineage call all those in the first descending generation in the linked lineage 'my children'.

I have used as an example a lineage which is linked to Ego's lineage through his mother's mother's brother. But the kinship terminology is unaltered if the link occurs in any ascending generation. In Diagram 7 I have set out the kinship terms applied by the dominant lineage to members in the linked lineage where the connection is through Ego's mother's mother's mother's brother.

The argument would run as follows:

	Ego's MM	calls Ego's MMMBD cross-cousin.
Therefore	Ego's M	calls Ego's MMMBD female father;
therefore	Ego's M	calls Ego's MMMBDD cross-cousin;
therefore	Ego	calls Ego's MMMBDD female father;
therefore	Ego	calls Ego's MMMBDDD cross-cousin.

601 To Ego therefore, in a lineage linked through one patrilateral link:

685 Any person in the first ascending generation is 'father' or
613 'female father'.

Any person in the same generation is 'cross-cousin'.

Any person in the first descending generation is 'child'.

Those in the second ascending generation are called 'grandparent' and those in the second descending generation are called 'grandchildren'. By the merging of alternate generations, those in the second ascending and second descending generation may also be called 'cross-cousin'.

Where the subsidiary lineage is connected to the dominant lineage through two patrilateral links the kinship terms for siblings is applied to Ego's generation. In Diagram 7 the linked lineage marked A is connected to the dominant lineage through Ego's MMBS. Ego calls his mother's mother's brother's son 'father' and, therefore, calls his mother's mother's brother's sons' children by the appropriate sibling terms.

If a subsidiary lineage were connected through three patrilateral links the kinship nomenclature would be the same as if there were only one link. Lineages connected to dominant lineages through two or more patrilateral links are very rare. Most subsidiary lineages are connected through one patrilateral link only. In any village the generation differences between members of dominant and subsidiary lineages tend to be obscured. The Yao tend to see the component lineages as wholes, and therefore speak of the relationships between members of the dominant lineage and members of the subsidiary lineages in general as 'cross-cousinship' (*tisuwani*). It is only in special situations that the exact relationship becomes important.

605 The pattern of behaviour between cross-cousins is consistent
578 with this view of their rôles in the make-up of a village. In the
621 typical Yao village there are two or three groups who are united in their extra-village affairs but opposed in internal relationships. Their hostility to each other comes to the surface at the slightest provocation, but they are, nevertheless, co-villagers. They are kin and yet not kin, because the Yao look upon kinship as primarily matrilineal. They talk of the link through the father as 'not proper kinship'. The hostility between the members of the different cross-cousin groups in the village is dissipated

2: Mitchell E-5 (1946-1949) 1956 FT7 Yao FT7

strangers. Meanwhile, the seceding group moves into some other village area at a distant place, where they are strangers themselves. The result is that kinship soon ceases to be the organizing principle in local area, and the principle of primacy takes its place. Hence, primary[1] kinship provides the principle on which the relationships among village headmen, and therefore villages, may be organized in a local area, for only a relatively short time. Before long, for a variety of reasons, the smaller villages move away and their sites are taken by others. 621 671

Primary matrilineal kinship on the other hand retains its significance as the means whereby relationships are organized within villages. In other words, outside the lineages of the ruling families it is very difficult to record a genealogy which does more than link the component parts of a village. Beyond this genealogies are socially insignificant. Therefore, since villages are continually breaking up, genealogies are usually shallow. Once a group has broken away to found a new village, its exact genealogical link with the parent village tends to be forgotten and replaced by a formalized link of perpetual kinship between the two village headmen.

Yao society, therefore, is not 'organic' in the way that Fortes describes Tallensi society: it is not 'governed by the same principles at all levels and in every sector of the social structure'.[2] Instead different principles of organization apply at different levels of Yao society. Thus the shallow lineages that form the core of villages are internally segmented. Villages are composed of matrilineages linked to each other usually through patrilateral ties, ties which are initially primary but become perpetual. Chiefdoms, on the other hand, may be seen as organizations of villages ranked in relation to each other and to the chief in terms of their perpetual kinship links, their antecedents, and their strength of following. 621 571 613 [631]

The same groups of matrilineal kinsmen may interact in three different fields of social relationships. Firstly, they may form a segment within a matrilineage. Secondly, they may form a group in a village linked initially by a primary and later by a perpetual patrilateral tie to the headman. Thirdly, if they

[1] i.e. kinship that can actually be traced as against 'putative' or 'perpetual' kinship.

[2] Fortes, *The Web of Kinship*, 341.

2: Mitchell E-5 (1946-1949) 1956 FT7 Yao FT7

621 should break away to found a new village they may become a
571 Newcomer and relatively junior hamlet in political relationships
613 with other villages in a local area of a chiefdom.

The group of kinsmen in each situation exhibits different degrees of corporate identity. As part of a lineage the identity of the group, except in unusual circumstances, is merged in the identity of the lineage. As part of a village the identity of the group appears clearly enough in intra-village affairs, but is merged in the identity of the village otherwise. It is only when the group can set up as a village of its own that its identity is finally established, that is, when the group becomes fully autonomous.

The identity of a group of matrilineal kinsmen therefore varies with the extent to which matrilineal ties with other kinsmen are emphasized. They can emphasize their independence of their kinsmen by playing down the link between them. A linked lineage in a village emphasizes its *patrilateral* link with the dominant lineage and so maintains its identity within its village of residence. The members do not consider themselves a part of a matrilineage which is dominant in some other village. By the same process a newly-founded hamlet does not emphasize its detailed and intimate links with its parent village, but tends to subsume these into a formal, perpetual relationship between the respective village headmen.

In Yao society, therefore, we may distinguish three orders or levels of social grouping:

1. The matrilineage which consists of ranked lineage segments.
2. The village which consists of ranked matrilineages.
3. The chiefdom which consists of ranked villages.

It is only at the most fundamental of these levels, i.e. within the matrilineage, that matrilineal descent provides a principle for organizing group relations. At the next level, i.e. within the village, matrilineal kinship gives way to other types of primary kinship between key personalities in the structure. At the third level, i.e. within the chiefdom, kinship appears only in the form of the highly formalized 'perpetual' kinship—the actual links may well have been forgotten long ago. The same kinship term may be applied between personalities at all three levels of organization, but the content of the term changes according to the field of interaction.

2: Mitchell E-5 (1946-1949) 1956 FT7 Yao FT7

APPENDIX B

GENEALOGY, HUT COUNT AND VILLAGE PLAN: ALI KAZUNKA VILLAGE

Hut numbers in brackets after the names in the genealogy.
Other symbols: d = dead; ms = married son; ln = labour migrant; u = below age of puberty; k = kitchen.

Hut Ownership

Hut No.	Owner	Gen. Ref.
1	Dr. Kazunka	G
2	Dr. Nkumula	G
3	Dr. Nkawa	G
4	Alinje	G
5	Dr. Sale	G
6	Mwenaso	G
7	Ali Kazunka	G
8	Mkalanyan	G
9	Atawila	G

VILLAGE PLAN: ALI KAZUNKA
(Not to Scale)

2: Mitchell E-S (1946-1949) 1956 FT7 Tao FT7

APPENDIX C

SKELETON GENEALOGY, HUT COUNT AND VILLAGE PLAN: MENE SECTION OF MAJAJA VILLAGE

Only hut owners are shown in the genealogy.

Hut Count

Hut No.	Owner	Gen. Ref.	Hut No.	Owner	Gen. Ref.
1	Meni	B4	19	Bt. Taimo	D6
2	Empty		20	Kitchen to hut 18	
3	Ambiwaje	C8	21	Bt. Wori	D7
4	Girls' dormitory		22	Ngwaluka	nil
5	Sepiri	D11	23	Bt. Toyali	D3
6	Disused		24	Bt. Saifi	D9
7	Bt. Hyali	D1	25k	Bt. Saifi	D10
8	Bt. Mbangwi	D3	25	Bt. Gwemende	C4
9	Bt. Dowa	E1	26	Ali Asini	D4
10	Bt. Wiruka	D2	27	Boys' dormitory	
11	Ariwanjila	C1	28	Bt. Cimungu	C3
12	Baiya	B1	29	Bt. Juma	nil
13	Eniwi	C6	30	Asweyuga	B2
14	Bt. Mlanje	C5	31	Palinjeje	D8
15	Amino	B3	32	Bt. Majaja	B5
16	Bt. Cilowana	C7	33	Ambaliaje	C12
17	Mongwe		34	Elki	C11
18	Cilowi	C2	35	Loni	C10

The following huts are not included in the genealogy:

Hut 2—Empty.
Hut 4—Girls' dormitory.
Hut 6—Disused.
Hut 17—Mongwe.
Hut 20—Kitchen to Hut 18.
Hut 22—Ngwaluka, a non-relative.
Hut 27—Boys' dormitory.
Hut 29—Bt. Juma, a relative of Ngwaluka.

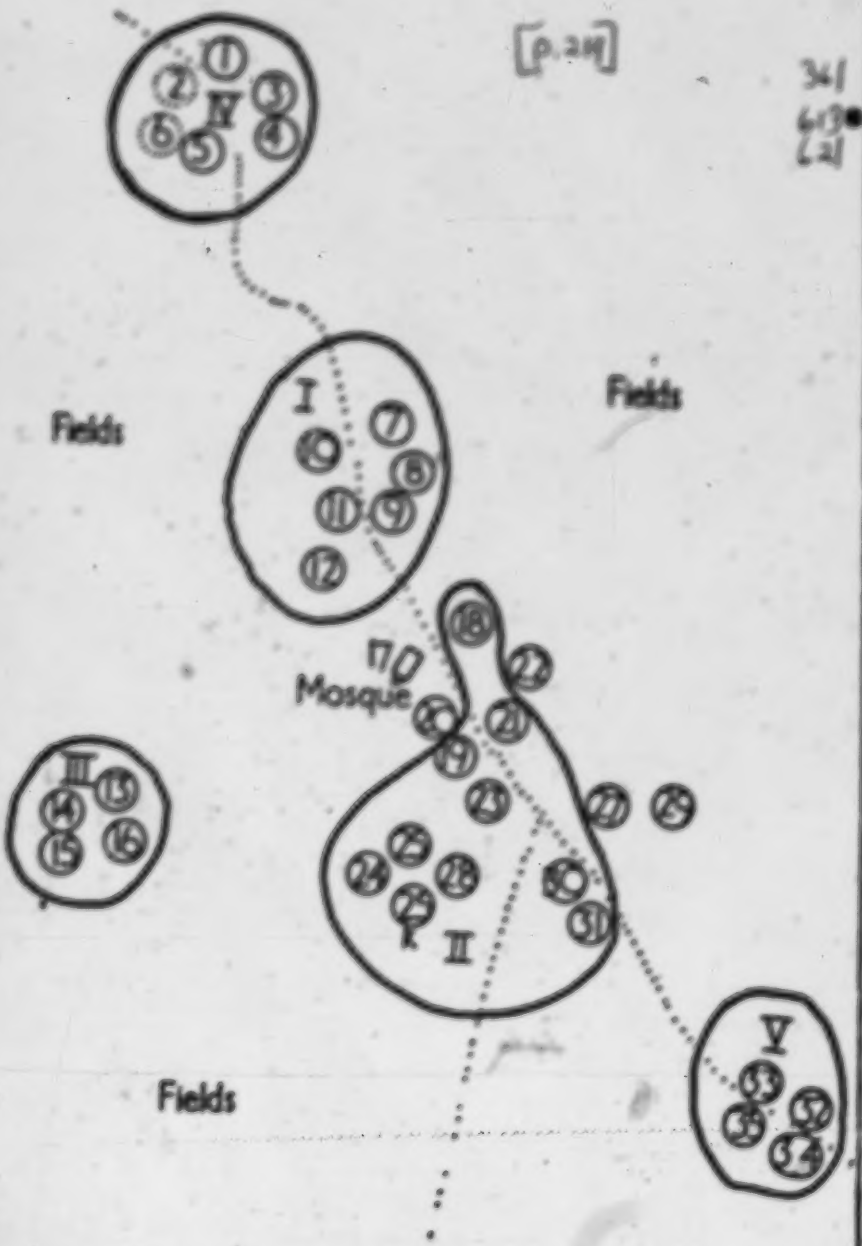

Village Plan: Majaja
(Not to Scale)

2: Mitchell E-5 (1946-1949) 1956 FT7 Tao FT7

APPENDIX D

GENEALOGY AND HUT COUNT: CIKOJA VILLAGE

Hut Count

361
613
621

Hut No.	Wife's name	Gen. Ref.	Name of husband	Gen. Ref.
1	Amanda	D14	Mbowa	C11
2	Ayati	E8	Kasili	D33
3	(Ayati' deceased wife)			
4	Bt. Tepuni	F37	Magala	E31
5	Bt. Bulala	E19	(outsider)	
6	Aniya	D13	(outsider)	
7	Bt. Amanda	E14	(outsider)	
8	Abasi	D16	Ali Mbwanda	C13
9	Lusigala	E13	(outsider)	
10	Ajanso	E15	Mana	D7
11	Bt. Mwanandi	G10	Nkazwella	D10
12	Bt. Bwana Ito	F16	(outsider)	
13	Bt. Amina	E4	(outsider)	
14	Andaya	E9	(outsider)	
15	Abana	E30	Kajabu	F10
16	Bt. Sekwanzi	D19	(outsider)	
17	Nerwera	E60	Lihoni A	D7
18	Bt. Kazungu	D40	(outsider)	
19	(outsider)		Ali Tepuni	E40
20	Alima	D12	(outsider)	
21	Aliya	D13	(deceased)	
22	Kalingula	E38	(outsider)	
23	Alamshirque	E31	(outsider)	
24	Bt. Ciwina	E13	(outsider)	
25	Bt. Mwenye	C14	(outsider)	
26	Bt. Mwanjale	E15	(outsider)	
27	Abasi	E37	(outsider)	
28	Bt. Cisinga	E39	(outsider)	
29	Andeya	E36	(outsider)	
30	Tewenje	E34	(outsider)	
31	Bt. Ulanga	D34	(outsider)	
32	Bt. Likomba	E33	Jumma	F7
33	Bt. Cikwenga	F64	(outsider)	
34	(outsider)		Cilimba	F1
35	Bt. Madi	F10	(outsider)	
36	Bt. Aliya	F11	(outsider)	

2: Mitchell E-5 (1946-1949) 1956 FT7 Tao FT7

Hey Cases—*continued*

Hey No.	Wife's name	Gen. Ref.	Name of husband	Gen. Ref.
37	Dr. Hulda	E5	(*remainder*)	
38	Dr. Elsie	E5	(*remainder*)	
39	Annette	E5	(*remainder*)	
40	Dr. Magnuss	D5	(*remainder*)	
41	(*remainder*)		Kami	F5
42	Ange	F4	(*remainder*)	
43	Dr. Silverson	F7	(*remainder*)	
44	Ayanyo	F7	(*remainder*)	
45	Kalagoli	F7	(*remainder*)	
46	Adesuna	E8	(*remainder*)	
47	(*remainder*)		Cikuja VI	E7

Note: The genealogies for Appendices B, C and D have been inserted as folding plates at the end of the book.

2: Mitchell E-5 (1946-1949) 1956 FT7 Yao FT7

Fields
Fields
Fields

2: Mitchell E-5 (1946-1949) 1956 FT7 Yao FT7

KEY TO CIROJA VILLAGE PLAN

Mlc — Senior segment of dominant matrilineage, i.e. descendants of Malinga (Cx). 361 613 624

Mlb — Second segment of dominant matrilineage, i.e. descendants of Dr. Mbwinda (Cx).

Mlc — Third segment of dominant matrilineage, i.e. descendants of Lungala (Cx).

Mlc_1 — Descendants of Andaya (Dx).

Mlc_2 — Descendants of Amidama (Dx).

Mlc_3 — Descendants of Amanda (Dx).

Mlc_4 — Descendants of Aniya (Dx).

Mlc_5 — Descendants of Abai (Dx).

N, O, P, X, Y, Z — Patrilineally-linked lineages.

S — Outsiders.

Mlc_1/S — A female descendant of Amanda married to a man from S patrilineally-linked lineage.

[p.223]

2: Mitchell E-5 (1946-1949) 1956 FT7 Yao FT7

Generation—A B C

361
●613
624

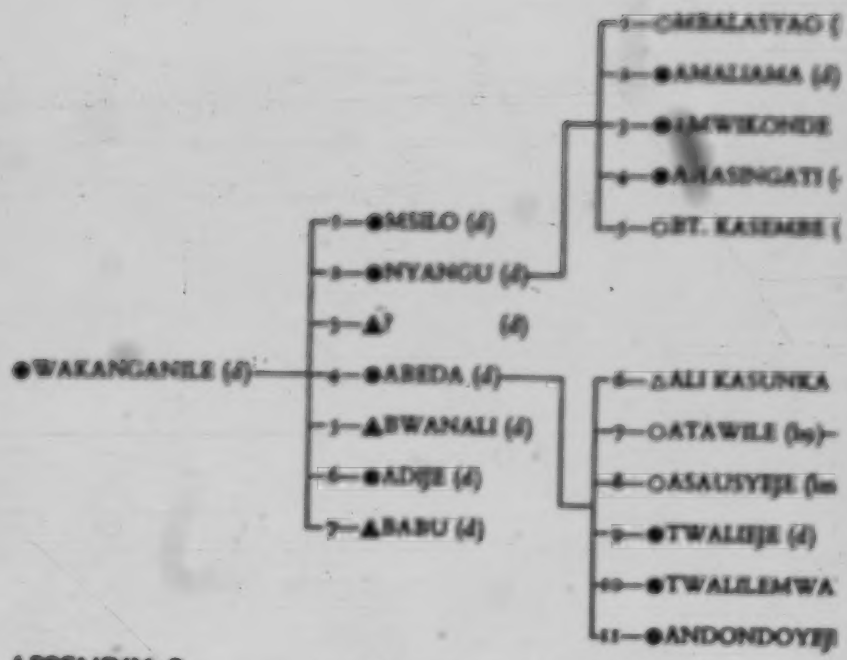

APPENDIX B

A

[End chart 1a]

2: Mitchell E-5 (1946-1949) 1956 FT7 Yao FT7

361
●613
64

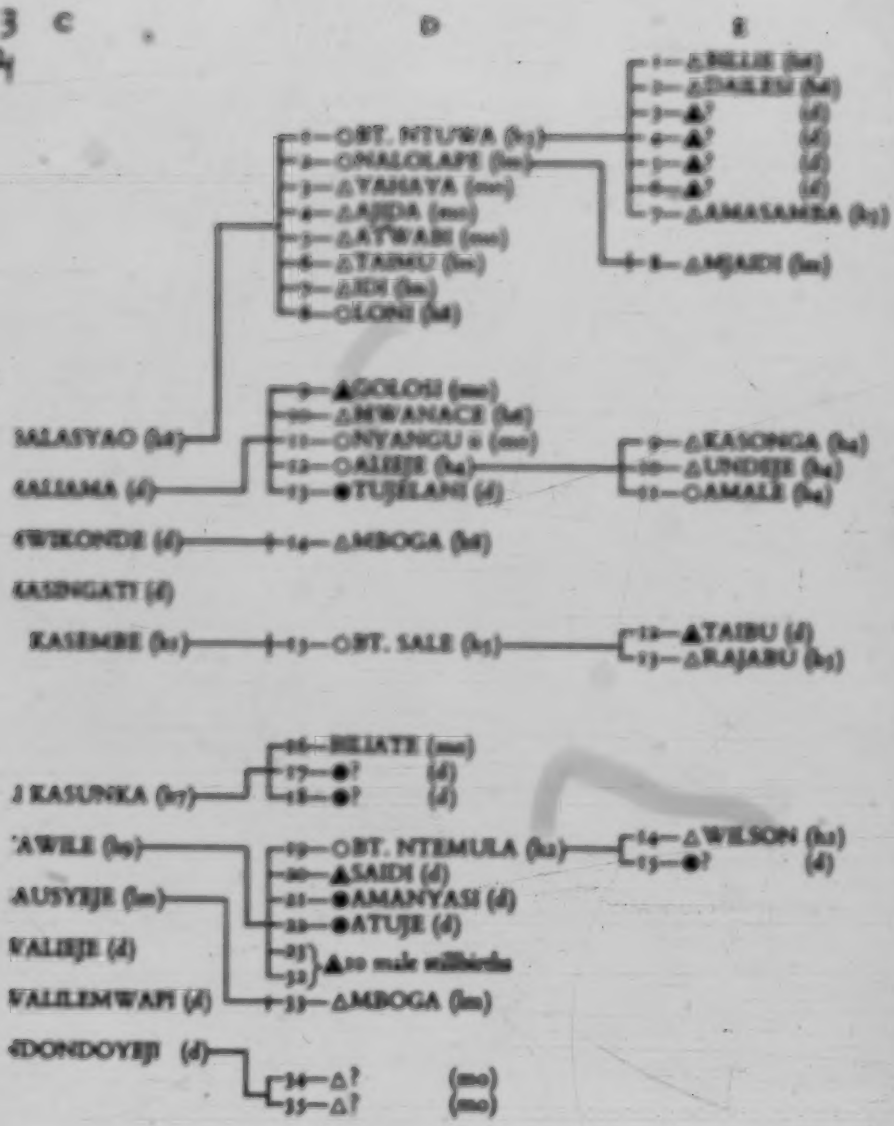

[End Chart 1b]

2: Mitchell E-5 (1946-1949) 1956 FT7 Yao FT7

361
613
621

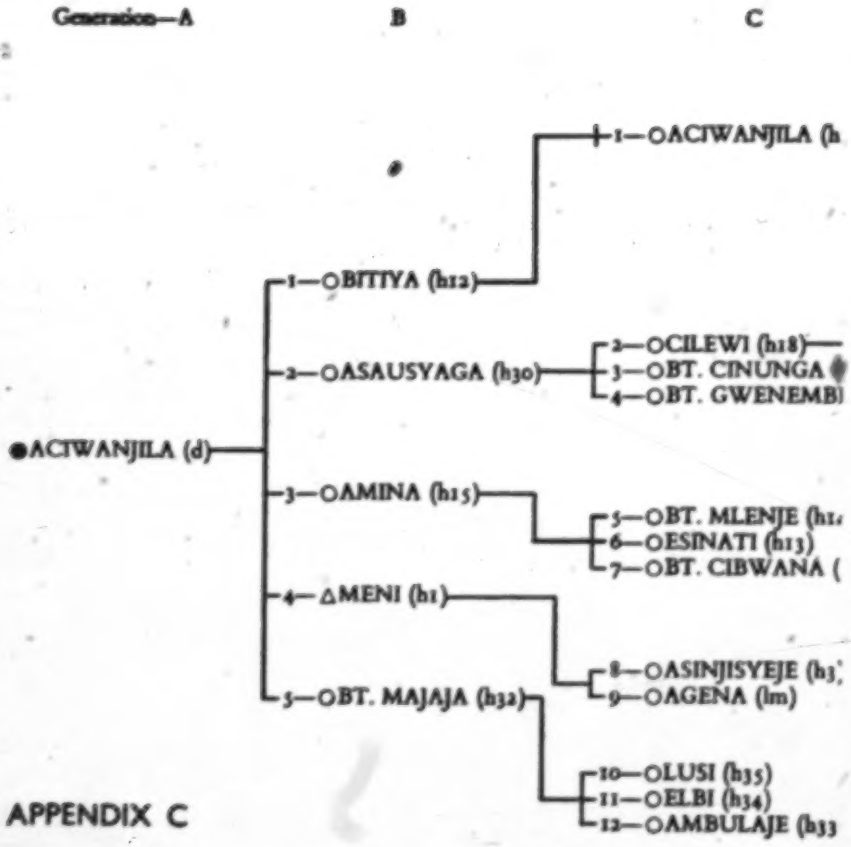

APPENDIX C

[End chart 2a]

2: Mitchell E-5 (1946-1949) 1956 FT7 Yao FT7

361
613
621

C D E

ANJILA (h11)
1—OBT. NYILI (h7)
1—OBT. DUWA (h9)
2—OBT. WEMBA (h10)
3—OBT. MLUNGUSI (h8)
I

4—ΔALI ASINI (h26)
5—OBT. TAYALI (h23)
6—OBT. TAIMU (h19)
7—OBT. WOCI (h21)
'I (h18)
NUNGA (h28)
8—OPALINJEJE (h31)
VENEMBE (h25)
9—OBT. SAIDI (h24)
10—OBT. SAIDI (h25k)
II

ENJE (h14)
TI (h13)
BWANA (h16)
III

SYEJE (h3)
11—OSAYISI (h5)
A (lm)
IV

135)
134)
LAJE (h33)
V

[End chart 2b]

2: Mitchell E-5 (1946-1949) 1956 FT7 Yao FT7

Generation A B

361
613
624 APPENDIX D

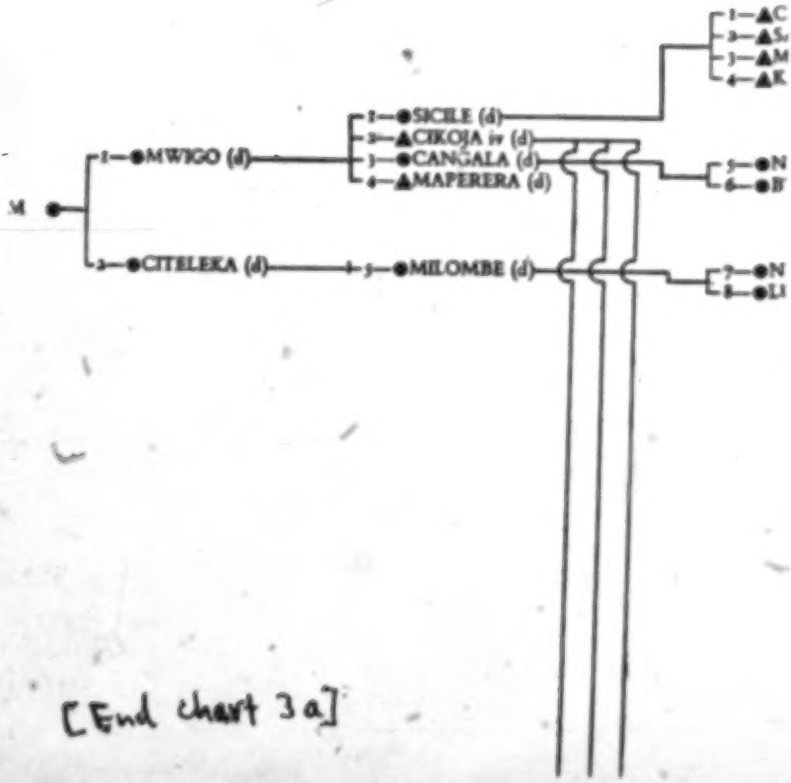

[End chart 3a]

2: Mitchell E-5 (1946-1949) 1956 FT7 Yao FT7

C D

361
● 613
624

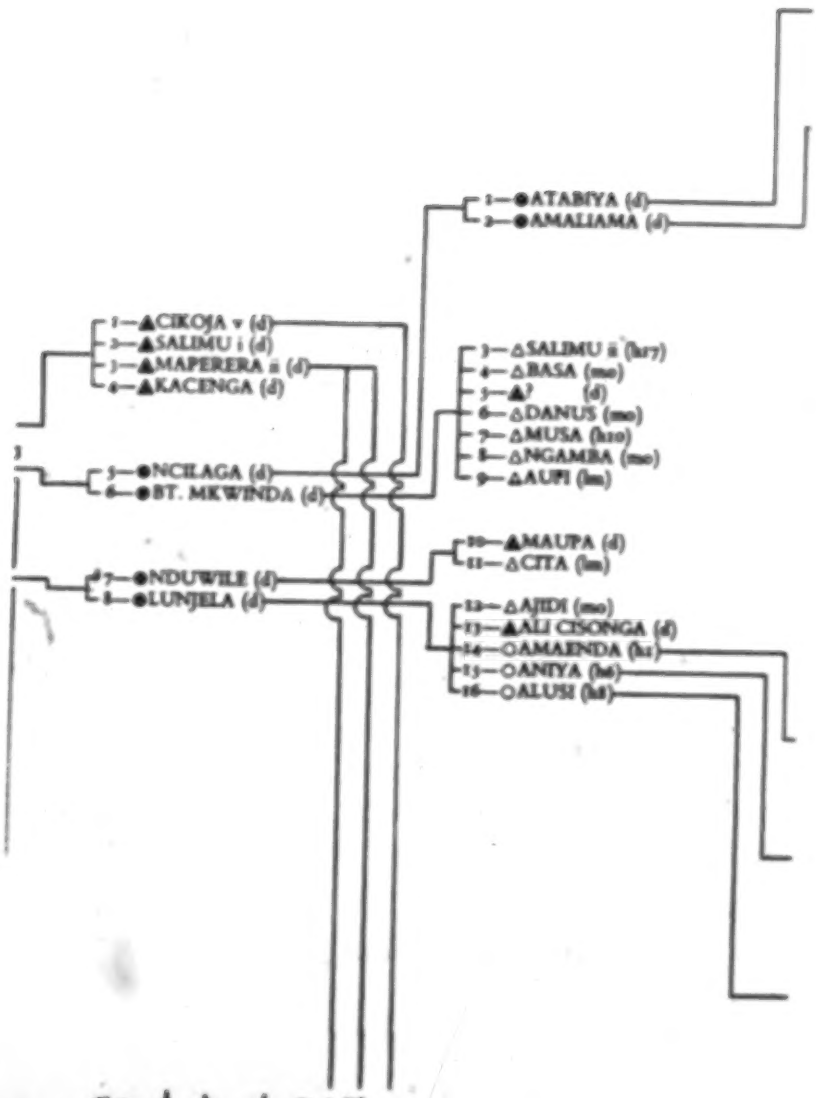

[End chart, 3b]

2: Mitchell E-5 (1946-1949) 1956 FT7 Yao FT7

E F

361
●613
621

1—△CILIMBA (h34)
2—○BT. MBWANA (h43)
3—△KAUSI (h41)
4—△GWILI (mo)

5—●? (d)
6—△SEMU (mo)
7—△JAUMA (h32)
8—▲ASSAM (d)
9—△AJISA (mo)
10—○BT. MADI (h35)
11—○BT. ALIYA (h36)

1—●WEGAMI (d)
2—●ASUNA (d)
3—○BT. NTALIKA (h37)

12—△SIME (u, h3)
13—△IDI (u, h3)
14—●? (d)
15—▲? (d)

4—○BT. AMISA (h13)
5—●? (d)
6—○ASIMAMA (h46)
7—△CIKOJA vi (h47)
8—○AYESI (h2)
9—○ASUBIYA (h14)

16—○BT. BWANA ISA (h1
17—▲DELEMANI (d)
18—△AMIDU (mo)
19—△KANYENGA (mo)
20—△RAJABU (h15)
21—△KAPINGU (KAR)
22—△AKIBA (u, h15)
23—▲AJISA (d)
24—△FRED (mo)
25—△GERALD (u, h12k)
26—▲AJISA (d)

27—○BT. MAKWESA (lm)
28—○MEGE (h42)
29—○AYUYEJE (h44)
30—○KASI NGATI (h45)
31—○NKATENDESYAGA
32—△BILI (u, h47)
33—●? (d)
34—●? (d)
35—●? (d)

36—△KAIFA (mo)
37—○BT. TEPANI (h4)
38—△AIDINI (u, h2k)
39—△ALANGA (u, h2k)
40—▲? (d)
41—△KAUSI (u, h2)
42—△JAMES (u, h2)

10—△LILE (mo)
11—△WAISONO (lm)
12—△AMULI (h1)

43—▲? (d)
44—▲? (d)
45—△MALOGWAGA (u, h
46—▲SELEMU (d)
47—●ALUWINDA (d)
48—○? (h14)

13—○LUNJELA ii (h9)
14—○BT. AMAMU (h7)
15—○INDI (h5)
16—○ALEJEPANYUMA (u, h6)
17—○AIDI (u, h6)
18—●? (d)

49—○NDIWASYAGA (u, l
50—●? (d)
51—●? (d)
52—●? (d)

19—○BT. BEULA (h5)
20—△TENNIS (lm)
21—○AWULUSYA (u, h8)
22—○? (u, h8)
23—●? (d)

53—○? (u, l

[End chart 3c]

2: Mitchell E-5 (1946-1949) 1956 FT7 Yao FT7

F G H

361

613

621

BA (h34)
BWANA (h43)
SI (h41)
I (mo)

1—○BT. KIMU (h38)
2—△WILLARD (u, h38)
3—△ASANI (u, h38)
4—△AISONI (u, h38)

1—△NTALIKA (u, h38)
2—○AMILE (u, h38)
3—▲? (d)

(d)
J (mo)
IA (h32)
M (d)
(mo)
IADI (h35)
LIYA (h36)

5—▲? (d)
6—●? (d)
7—○AKULUPILILE (u, h35)
8—○ABU (u, h36)

4—△MBONA (u, mi)
5—○NGANIJAO (u, h12)

(u, h3)
, h3)
)
)

WANA ISA (h12)
MANI (d)
U (mo)
ENGA (mo)
BU (h15)
NGU (KAR)
A (u, h15)
(d)
(mo)
LD (u, h12k)
(d)

9—●NCILAGA (d)
10—○BT. MWAMADI (h11)
11—△DOUGLAS (mo)
12—○UCINGAMILE (u, h13)
13—○ANGALIUNGOSWE (u, h13)
14—○APANJISYEJE (u, h12)
15—△ASINOSI (u, h12)
16—○AWINJI (u, h12)
17—○? (u, h12)

6—●? (d)
7—▲? (d)
8—●? (d)

AKWESA (lm)
(h42)
EJE (h44)
NGATI (h45)
ENDESYAGA (h42)
, h47)
)
)
)

18—△TWAIBU (lm)
19—△ALENGA (lm)
20—●? (d)
21—▲? (d)
22—△? (u, lm)
23—△? (u, lm)
24—●? (d)

25—○AKANENA (u, h44)
26—△? (u, h44)
27—●? (d)
28—●? (d)

29—▲? (d)
30—○? (u, h45)

(mo)
EPANI (h4)
I (u, h2k)
GA (u, h2k)
)
(u, h2)
(u, h2)

31—△BULAIMU (u, h4)

(d)
(d)
GWAGA (u, h2k)
IU (d)
INDA (d)
(h14)

ASYAGA (u, h9)
(d)
(d)
(d)

3
(u, h5)

[End chart 3d]

2: Mitchell E-5 (1946-1949) 1956 FT7 Yao FT7

361
613
621

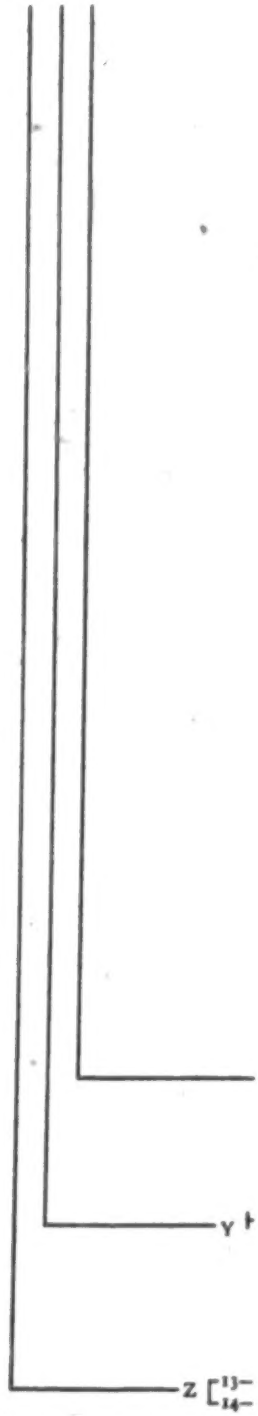

Dominant matrilineage in CAPITALS
Hut numbers in brackets after names

Other symbols :—
d = dead
mo = married out
lm = labour migrant
u = below age of puberty
mi = migrated
k = kitchen
KAR = King's African Rifles

[End chart 3a]

2: Mitchell E-5 (1946-1949) 1956 FT7 Yao FT7

361
●613
621

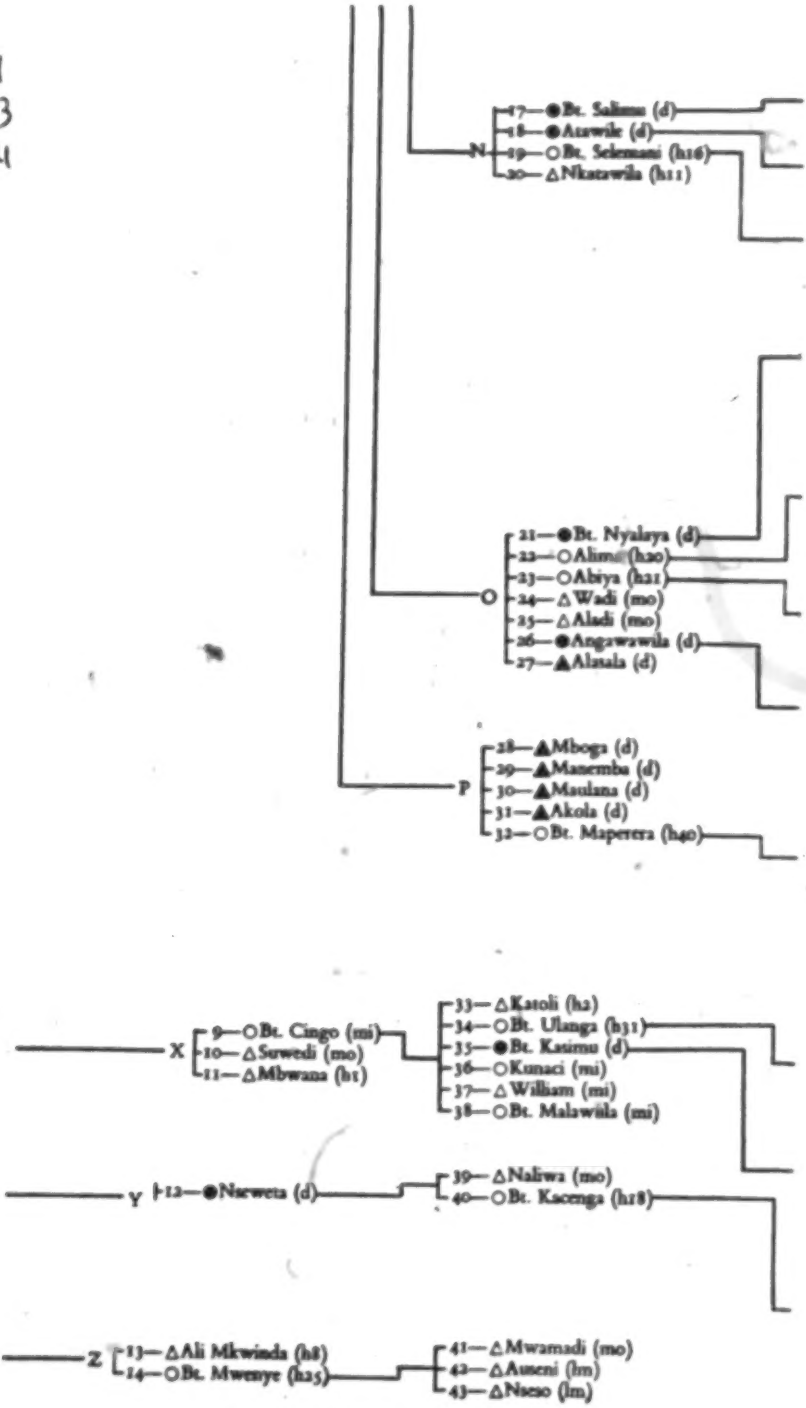

[End chart 3f]

2: Mitchell E-5 (1946-1949) 1956 FT7 Yao FT7

361
613
621

mu (d)
(d)
mani (h16)
ila (h11)

24—●? (d)
25—○Ajumo (h10)
26—△Ajibu (mo)
27—△Alabu (mo)
28—△Alubi (mo)
29—△Racidu (h15)
30—○Abena (h15)
54—△? (u, h1
55—△? (u, h1

31—○Akumburipe (h23)
32—△Ali Cirwina (mo)
33—○Bt. Cirwina (h24)
34—△Awali (lm)
56—△Amali (u, h23)
57—△Tepani (u, h23)
58—△Ngulewanga (u, h23)
59—△Petulo (u, h23)
60—○? (u, h23)
61—○? (u, h24)

yalaya (d)
(h20)
(h21)
(mo)
(mo)
vawila (d)
a (d)

35—△Yunus (KAR)
36—△Binamu (lm)
37—△Dulayeni (h20k)
38—△Kalinguile (h22)
39—▲? (d)
40—△Ali Tepani (h19)
41—△Ali (mo)
42—△Walusa (mo)
43—△Twafina (u, h20k)
44—△Ali Tambula (mo)
45—△Abbas (lm)
46—△Isaac (lm)

d)
o (d)
(d)
)
rera (h40)

47—●Bt. Kachenga (d)
48—●Aninga (d)
49—▲Mboga (d)
50—○Atawile (h39)
51—△Ali Ngamba (mo)
62—○Asumeni (u, h39)
63—△Asadi (u, h39)

64—○Bt. Cikwenga (h33)
65—△Amani (u, h33)
66—▲Mwenye (d)
67—△Nasamba (u, h32)
68—△Tayali (u, h32)

69—△Stand (u, h30)
70—△Alasi (u, h30)

131)
l)
(mi)

52—△Mapila (mo)
53—○Bt. Lilomba (h32)
54—○Tuweneje (h30)
55—○Bt. Mwanjele (h26)
56—○Asidaya (h29)
57—○Alasi (h27)
71—○Andiwasyeje (u, h26)
72—○Awambali (u, h26)
73—△Mbela (u, h27)
74—△Asima (u, h27)
75—▲? (d)

58—△Ali Cininga (d)
59—○Bt. Cininga (h28)
76—○Anualago (d)

h18)

60—○Naweta (h17)
61—○Bt. Ndala (mo)
62—△Ali (mo)
63—○Lunjela (u, h17k)
64—○Asasyeje (u, h17k)
77—○Asayewasi (u, h17)
78—▲? (d)
79—●Amasamba (d)
80—▲Asigaeje (d)
81—△Akasoleje (u, h17)
82—△Mwenye (mi)
83—●? (d)

o)

[End chart 3g]

2: Mitchell E-5 (1946-1949) 1956 FT7 Yao FT7

(u, h20)
(u, h20)

361
613
621

u, h23)
(u, h23)
wenga (u, h23)
u, h23)
u, h23)

u, h24)

u (u, h39)
, h39)

wenga (h33)

+32—O?

(u, h33)

u, h33)
e (d)
a (u, h32)
u, h32)

, h30)
h30)

ayeye (u, h26)
oh (u, h26)

u, h27)
u, h27)
d)

o (d)

ram (u, h17)
(d)
nba (d)
: (d)
ye (u, h17)

e (mu)
(d)

[End chart 34]

marriage-surety for the marriages of the members of the group. Briefly this means that he must be approached before a marriage can be legally contracted by any member of his charge, he or his representative is present at the ceremony which formally announces the marriage, and he is responsible for the behaviour of his female relative in that marriage. Third, he is immediately concerned with the physical welfare and health of his sorority-group. He must track down the sorcerers causing their illnesses and supply the medicine to heal them. He has to arrange for the ritual purification of mourners after the death of one of the sorority-group's members. Fourth, he must be present in the court-house if one of his charges is involved in a case and he is usually looked to for the money for the fine. I have known a case not to begin because the warden of the sorority-group was not present. Frequently if the husbands of the female members of his charge default, he has to provide the hut-tax money.

Usually the warden of the sorority-group is the eldest brother of a group of adult full sisters. The younger brothers of the group of sisters, while concerned with their welfare, do not stand in this particular responsible position. They refer to the sorority-group as ' our sorority-group '. The elder brother refers to the sorority-group, be it noted, as ' my sorority-group ', and this sets him over and against his younger brothers. The position that the warden holds, however, is not rigidly fixed, for a younger brother may assume control of the sorority-group if for some reason he is dissatisfied with the way in which affairs are being conducted, and is able so to assert himself.

If we recall that the status of a man in a Yao community is determined by the number of dependants that he can command, it is easy to see that relationships between an elder brother and his younger brother are distinctive. The elder brother is responsible for the actions of his younger brother in much the same way as he is for one of his sorority-group, and the younger brothers have a great emotional attachment to their older brothers. Yet at the same time the elder brother stands in the way of the younger brother in his striving for status, in that while the elder brother is warden of the sorority-group the younger brother cannot be, and therefore cannot have dependants and status. It is not surprising to find that accusations of sorcery are frequently made between brothers and the result often is that the younger brother takes the sorority-group away from his sorcerer brother to some other place and sets up a new village with it. Therefore, one possible source of instability in a Yao village lies in the operation of the kinship system in a system of values which reckons status by adherents.

I have thus far been describing the simpler types of village. In the larger groups it is common for the warden of the sorority-group to live in the village where his sorority-group is. Then he usually brings one (or sometimes more) of his wives to the village, where she lives patrilocally. The daughters that are born to her do not return to the sorority-group from which the headman's wife came but marry and set up households near their mother in the village of their father. Thus there develops in time a second sorority-group in the village, alongside the first sorority-group, and related to it through the headman. At this point we may say that the man's position has changed from that of headman of a village containing a single sorority-group, to the more complicated and less secure one of village headman over a more hetero-

genous group, in which his jurisdiction over one part of the village arises from his position as the warden of a sorority-group, and that which he exercises over the other sorority-group derives partly from his position as a non-matrilineal relative and partly from his own personal qualities. The warden of the second sorority-group is the headman's own son and it is he who takes over all the functions proper to that position, but the successor to the headmanship is a man's sister's son, usually, though not invariably, the first-born son of the eldest sister. Each village headman in turn brings his wife to live in his village and each headman's wife in turn tends to set up a fresh group which is of a different lineage affiliation from that of the headman. In addition to this the warden of the sorority-group formed from the first headman's children tends in due course to live patrilocally and the children of his wife set up yet another foreign group in the village. Hence, theoretically, with each generation the number of opposed groups in a village doubles itself, and in a few generations, were this to continue, the position would become extremely complex. In fact a village of long standing is seen to be composed of a central lineage group to which the headman belongs, and a series of other lineage groups related to the headman's lineage group through one or other of the past and present headmen of that village. Such groups of different lineage make-up are usually mutually opposed and are held together only by the combined influences of a weak patrilineal connexion with the headman's lineage and the personality of the present headman.

This situation is clearly an uneasy one for the headman. His wife is looked upon as a stranger and is often made to feel it. The headman's sorority-group often expresses its hostility and jealousy towards her. The children of the two groups are on no easier terms. They call each other 'cross-cousin' (*asiwani*) and are expected to marry one another. At the same time the hostility between them is formulated in joking relationships. This critical situation of the headman is made clear to him on the day of his succession. One headman was told: 'As you have got wives, do not listen to what they say. They may be lying. Sometimes they will quarrel with your sisters and say that your sisters have been insulting you. This is false. When you hear these reports you may be unfair to your sisters and the people will say that you have broken your village through listening to nonsense.' Thus when conflicts arise between members of a village the headman is in a peculiar position and it is difficult for him to remain impartial. In such a situation the tendency is to call in an outsider to try to settle the differences. Sometimes these differences are patched up and the village continues as a unit. But, particularly after the death of the first village headman, the tendency is for one of the groups to move away to a completely new area, there to set up a unit of its own.

I quote an actual case to illustrate this procedure:

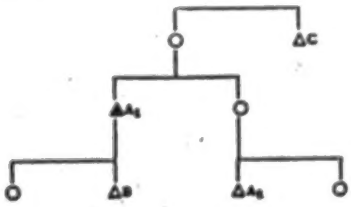

1: Tew E-4 (no date) 1950 FT7 Yao FT7

342 Yao make square houses.[1] Panelled doors and glass windows, deck-chairs and palm
177 furniture are becoming more and more popular. The men wear long Moslem robes
[291] and the women are clothed in cotton. In the rural areas there are usually a few craftsmen who still ply their trades as carpenters and blacksmiths, though the latter no
326 longer smelt, but use scrap-iron.

Labour Migration

162 Statistics are not available for the Yao of Portuguese East Africa or Tanganyika
464 Territory. Yao constitute 34 per cent. of the total population of South Nyasa district, 15 per cent. of upper Shire, 11 per cent. of Blantyre and Zomba.[2] The proportion of labour migrants in these districts was in 1937 as follows:[3]

District	*Adult males fit to work*	*Percentage of emigrants*	*Number producing economic crops*	*Number of subsistence producers*	*Emigrants not heard of since 1930*
South Nyasa .	24,230	27·1	2,912 (12%)	12,025 (49%)	873
Upper Shire .	24,673	13·9	2,555 (10%)	16,609 (67%)	255
Blantyre . .	25,330	15·6	3,788 (15%)	10,165 (40%)	986
Zomba . .	26,679	12·4	7,720 (29%)	9,040 (33%)	553

[134] South Nyasa district, which is unfertile waterless bush with a long history of famine and food shortage, has the highest proportion of labour migrants. Upper Shire, though not fertile, is more prosperous, benefiting from the tobacco- and cotton-growing industries, and from the dried-fish trade.[4]

SOCIAL ORGANIZATION AND POLITICAL STRUCTURE[5]

Kinship and Local Grouping

611 Among the Yao succession is matrilineal and marriage mainly matrilocal. Accord-
[591] ing to some informants succession formerly passed down the line of brothers, as with the Bemba, but it now passes direct to the eldest sister's eldest son, or to descendants of other sisters in order of seniority.[6] Chiefly succession follows the same rule, but the most senior may be set aside for a more suitable candidate.[7]

611 Clan names, *lukoryo*, are inherited matrilineally, and formerly designated exogamous
614 units,[8] but the marriage prohibition has now ceased to operate. Holders of the same clan name are unable to trace descent from a common ancestress, and for commoners clan names seem to have quite lost their significance; they are, however, carefully remembered in the chiefly lines and in other lines of hereditary rank, such as village headmen.

614 Within the general kinship grouping of the clan, a smaller group is recognized,
613

[1] Werner, 1906, p. 144; Macdonald, 1882, vol. i, pp. 20–2, describes a round hut.

[2] 1931 Census information is taken because the district boundaries were changed between 1931 and 1945, so that the information in the 1945 Census would not be susceptible of comparison with that given in the 1937 Survey of Male Adult Population in the *Bell Report*, Appendix A.

[3] *Bell Report*, 1938, Appendix A.

[4] Smith, 1937.

[5] Information, unless otherwise stated, is from Mitchell, and relates to south Nyassaland Yao.

[6] Johnston, 1897, p. 471; Meredith Sanderson, 1920, p. 370. Cf. Macdonald, 1882, vol. i, p. 187, who says that brothers inherit before sister's son.

[7] Ibid., p. 189.

[8] Bannus, 4, 1902, p. 236.

libele (plur. *malele*), a breast. This includes all who are supposed to be descended 614
from a common ancestress. Often the direct line of descent from the founding 613
ancestress is not known for more than three or four generations. The small groups
which can definitely claim to be 'of one breast' constitute the distinct matrilineal [621]
groups which live together in separate hamlets within a village. Each is undifferentiated
in relation to other matrilineal groups, but internally each is differentiated on the
principle of sibling unity.

The main emphasis of the kinship system is on the bond between a man and his 593
sisters. Their relationship is summed up in the word *mbumba* (translated by Mitchell
as 'sorority group'). A man speaking of his *mbumba* refers to all the women he calls 602
sister, their daughters, and their daughters' daughters. Strictly speaking, female kin
in the ascending generations are excluded, as belonging to the *mbumba* of his mother's
brother. The 'warden' of a sorority group, *aryene mbumba*, is the senior of the brothers
and is responsible for the behaviour of the women in his charge; he appears for them
in court and pays fines on their account. He plays an important part in the marriage
negotiations. It is his duty to consult the diviner if his sister or her child falls ill, and
to be chief mourner at the funeral of either of them, also providing medicine for the
ritual purification at the end of the mourning period. Formerly these obligations were
balanced by certain rights. He could sell some of them into slavery for his own
personal reasons. This privilege is ended, but even to-day it is through his sorority
group that a man achieves status and independence.

The principle of sibling unity is expressed in many other ways. A man and his 601
sister reciprocally call each other *alumbwangu*. More usually, a woman calls her 602
brother, older or younger than herself, *acimweni* (a term of respect usually applied to
a chief), for any brother may be regarded as warden of her sorority group. A man has
the same duties to his younger brothers as to his sisters, so they also call him *acimweni*,
but he calls them *mpwanga* 'younger brother', as they can never be in the position
of warden in relation to him. Maternal uncles are called *ahwelume*, and a sister's
son *cipwa*.

Within each matrilineal descent group, differentiation takes place between members 602
according to whether they are siblings or not. A man's sorority group included ideally 593
his own siblings and their female matrilineal descendants. His sister's daughters are
also the sorority group of his sister's son, their brother, so that any woman can belong
at any one moment to the sorority groups of her brother, her mother's brother, her
mother's mother's brother, &c., but the effective one is that of her own brother, if
adult. He is consulted first in small disputes, and at the marriage ceremony each party
is represented by a brother as well as by a mother's brother. In the break-up of a
hamlet (described below, p. 12), siblings tend to hold together more closely than
cousins and to form groups of their own, so that each woman in the descent line is a
potential point of cleavage. Tension between brothers as they compete for control of [578]
the sorority group is a source of friction within the sibling group which eventually
leads to its disruption.

Since marriage is mainly matrilocal, and extra-village, the husband in his wife's 591
village is seen as a stranger by all the members of her matrilineal descent group.
There is a tendency for members of such descent groups to live together in a cluster 621
of huts. The word 'hamlet' is used by Mitchell to indicate a cluster of huts, in which 614

1: Tew E-4 (no date) 1950 FT7 Yao FT7

every adult member is a matrilineal descendant of a single ancestress, or a spouse of one of these people. All husbands are called *alamu* by the male members of the descent group, but husbands call each other by the kinship terms for older and younger brother (i.e. *acimwemi* or *mpwanga*) according to the seniority of their wives. Similarly undifferentiated in kinship terms are the wives of all men of the descent group, who call each other 'sister'.

The husband is expected to work in his wife's garden, to help his mother-in-law, and also, in the early stages of marriage, to avoid her. His attitude to his father-in-law is one of respect, relaxing as time goes on. His attitude to his wife's brother is also one of respect, which covers feelings of latent hostility. Although husband and wife's brother co-operate in affairs relating to the woman and her children (e.g. they jointly consult the diviner in case of illness, and the brother-in-law hears grievances the husband may have against his wife), there are elements of conflict arising from their competition for the affection of the woman and her children.

Patrilocal marriages are the rule in certain cases. The village headman commonly has his wife in his own village. At his death his widow may return to her own village, but if her daughters have married locally she may stay, and one of her sons, as warden of his sisters, will also stay and marry patrilocally, as did his father, the headman. Thus a new matrilineal descent group, linked to that of the headman by a patrilineal link, develops. In every generation the number of separate but related matrilineal descent groups would double, and at such a rate of proliferation it might be expected that any village would contain many family groups. In fact, however, most members of a village can trace their descent from a common ancestress removed not more than about five generations. There are two reasons for this degree of homogeneity in the kin-grouping in the villages. One is that the villages tend to split up as they become too large and complex. The other is that the introduction of a new matrilineal descent group is often avoided by a cross-cousin marriage by the headman of the village or the warden of a sorority group.

There is a joking-relationship between cross-cousins, that is, for example, between the village headman's children and his sisters' children. The latter, as members of his descent group, have interests and loyalties opposed to those of his own children. Although there is a strong tradition of cross-cousin marriage, such marriages are said to be likely to be unstable.

Betrothal and Marriage

Child betrothal was common among the Yao. Acceptance of a loin-cloth and the wearing of it was token of betrothal, giving the groom exclusive rights over the girl.[1] The negotiations for an adult marriage are conducted by senior matrilineal kinsmen of the parties, who at the subsequent ceremony act as witnesses or sureties to the marriage. Usually the senior is the mother's brother, and the junior the brother. The act of validation, the *Cingonse* rite, takes place some time after the husband and wife have been living together. They meet in the hut of the woman for the rite, which consists in eating two pots of porridge, prepared by the female relatives of each party. The man's people bring a cockerel and the woman's a hen for relish. The exchange of food symbolizes the exchange of members of each matrilineal kin group, which is

[1] Macdonald, 1882, vol. i, p. 118; Johnston, 1897, pp. 411–13.

2: Mitchell E-5 (1946-1949) 1956 FT7 Yao FT7

riages between the chiefs and Newcomers and as a result there are 3·9 per cent of the Newcomer headmen who are linked affinally to the chiefs. The proportion of affinally-linked headmen in the two categories is approximately the same. The major differences are among the proportions of headmen linked by matrilineal and patrilateral ties to the chief.

Clanship with the Chief

A more numerous category is those who are related to the chief, not by common descent but by clanship.

Informants tell me that before the Whites came to Nyasaland, each person took the clan-name of his mother. People who had the same clan-name were said to be ' of one kind ' (*lukosyo lwamo*). The word *lukosyo* had no other meaning but ' kind ' or ' sort ', and the word *mtundu* is frequently used as a synonym. If a man is asked his *lukosyo*, he is as likely as not to give the reply ' Yao ' or ' Machinga ', i.e. his tribal origin. By extension it follows that if two people have the same clan-name inherited from their mothers, and their mothers in turn have inherited it from their mothers, and so on, eventually there must be a common ancestress. The two people therefore call each other ' brother '. However, among the Yao there are no stories of the origin of clans and only vague traditions of a common clan ancestress. I often questioned Yao about their clan-names and joked with them that though they were Invaders they shared the same clan-names as their subjects. The clan-names I found among the Machinga Yao were *apiri*, *amilasi*, *ambewe*, *abanda*, *asimbiri*, *amwale*, *angoma*, and these clan-names also appear among the Marawi group of tribes (Cewa, Maŋanja, Cipeta, Mbo, etc.), the Lakeside Tonga of Chinteche district, and the Mpotola and Lomwe or Nguru from Portuguese East Africa. The Achisi Yao under Katuli, a group related to the Mataka Yao from Portuguese East Africa, do not have these clan-names, nor, as far as I know do the Yao in Tanganyika. Clan-names, therefore, may be a feature of the Machinga Yao in Nyasaland, acquired as a result of their contact with the Marawi and other indigenous peoples of that country. It is significant that the clan-names are not as a rule common Yao words for everyday objects in the same way that clan-names amongst, say, the Bemba of Northern Rhodesia, are names of plants, animals and other natural phenomena. The word

2: Mitchell E-5 (1946-1949) 1956 FT7 Yao FT7

622 *amilasi* is used for bamboos and once an informant when pressed
643 told me a tale of a group of people who in dire starvation ate
614 bamboo leaves and were thenceforth called after the bamboos. This story, however, was discredited by others and I pass it off as unimportant. There is, however, some evidence that the words *apiri amilasi*, *ambewe* and so on, are commonly used in Nyanja, and possibly amongst the Lakeside Tonga who were once part of the Marawi peoples, for objects other than clan-names.

614 Informants say that people with the same clan-name could not
582 marry in the past,[1] so that the clan appears to have had the characteristics of an exogamous descent group. The position to-day is vastly different. Not only do people take the clan-names of their fathers, but many young people do not even know their clan-names at all.

614 At this point I should make it clear that the modern confusion
611 about clan-names is no doubt partly due to the emphasis placed on patrilineal descent by the purveyors of White culture, the
567 Administrators and the Missionaries, and also by the same emphasis in Islamic tradition which has influenced most Yao groups. Another factor in the situation is that slave descent still markedly affects social relationships in modern Nyasaland. Its significance here is that when a man took a slave-wife in the old days, his children by her took his clan-name, and not hers. Patrilineal descent of the clan-name therefore tends to point to the slave origin of a person. People who are able to point to a freeman ancestry are proud of this fact and are proud to be able to claim a clan-name associated with a long line of matrilineal ancestors, particularly if there were some well-known men among them. On the other hand, I found it a fairly safe indication that, if I could find no information about an ancestress, particularly her clan-name, then I was dealing with a group descended from a slave. A third factor is that some people
614 explained their lack of knowledge of a clan-name by the state
611 of social unrest and confusion at the end of the last century. As a result of the incursions of the Ngoni, Nguru and slave-raiding Yao and Arab groups, and finally the punitive expeditions of the British and the Portuguese, villages were destroyed and groups annihilated. People lost contact with their relatives, even

[1] Confirmed by Hynde, R. S., 'Marriage and relationship among the Yao', *Nyasa News*, vii (1895), 217–18.

2: Mitchell E-5 (1946-1949) 1956 FT7 Yao FT7

their parents. Therefore many people who were children then, but adult to-day, say that their parents were 'lost running from the wars' and that they were never told their clan-names.

Whatever are the factors which have led to the comparative lack of importance of the clan-name in the social relationships of commoners to-day, the clan-name has preserved its significance in the political structure. I have already said that the clan-names associated with particular village headmanships and chieftaincies are well remembered, and this fact is not without significance. It seems likely that the clan-name was used in earlier times by groups as a method of claiming protection. The same set of clan-names appears throughout the tribes which surround the Machinga Yao. It seems likely that the adoption of clan-names facilitated their incursion into the country, and it is certain that insurgent Yao groups have used the clan-name as excuses to move into an area, and gradually to extend their dominance over it.

For example, in Malemia's area there is an Nyanja village headman called Nyani, who has the clan-name *amusle*. Stannus reports that when Malemia moved into this area he claimed brotherhood with Nyani because of the clan-name, and was able to obtain from him the land extending from the Likwenu River to the Namadsi River, a district 30 to 40 miles long.[1] Again when Kawinga fled from Chikala after the British raids on it, he went to the land of Nkanyela, an Mpotola chief in Portuguese East Africa, who is also an *ambeuve*. That the clan-name is used essentially in this political field is illustrated by the relationships of Mposa to Mbande. Mposa, the son of Kawinga I, settled in the country of the Nyanja chief Mbande, who had the same clan-name as Mposa, viz. *amilasi*. Mposa calls Mbande 'brother' to-day and Mbande holds a position of honour and rank in Mposa's chiefdom. It is significant that other village headmen such as Cilombo, Mbalika and Mkwinda also have the same clan-name, but they do not claim kinship to Mposa. In modern times, when there is no longer any great danger to be incurred in moving from one part of the country to another, it seems likely that the necessity for some mechanism, whereby the friendship of otherwise hostile groups could be secured, falls away. In other words, the significance of the clan-name is gradually disappearing as its functions atrophy.

[1] Stannus, 'The Wayao of Nyasaland', 237.

2: Mitchell E-5 (1946-1949) 1956 FT7 Yao FT7

614 601 Relationship may be claimed not only through having the same clan-name, but also by patrilateral and affinal clan ties. For example, one of the early Kawingas is supposed to have married an *abanda* woman. Therefore Chikweo, whose clan-name is *abanda*, calls Kawinga 'brother-in-law' (*alamu*). Some of Kawinga's village headmen also call him brother-in-law because of the clan-name. Ngokwe, whose clan-name is *asimbiri*, had an *amilasi* father, so that many of his *amilasi* headmen call him 'son'.

614 622 643 Here, as before, there are more Invader headmen who claim to be clan relatives of the chief (34·6 per cent) than Newcomer headmen (13·9 per cent) (see Tables VII and VIII). Once again the proportion of headmen who claim affinal links to the chief is approximately the same in the two categories and the main difference is in the proportions who have the same clan-name and who are clan-patrilateral relatives in the way I have explained. I have mentioned that though many headmen have the same clan-names as the chiefs or the clan-names of the chiefs' fathers, they do not all claim to be clan-relatives of the chiefs. There is no reason to suppose that the distribution of clan-members is different between the Invaders and Newcomers, so that it seems likely that more Invaders claim the clan-relationship to the chief when they can, than do Newcomers.

Unrelated Headmen

622 643 The striking difference between the two main groups of headmen is in the proportion not related to the chief. Among the Invaders only 35·1 per cent of the headmen cannot claim some kinship link to the chief. Among the Newcomers, however, roughly double that proportion (78·8 per cent) are in this position. Among the Invaders some of the unrelated headmen hold positions of importance by virtue of their independence of the chief. These are the *nduna* whose functions I describe later.[1] Among the Newcomers, however, there are no *nduna*, so that this difference between the categories is one of the most important.

In Tables VII and VIII I have omitted a total of 105 villages, 93 of which were small villages whose relationship to the chief I did not record. All these villages were settled in distant and inaccessible places and I asked about them from the chiefs and

[1] Chap. IV, pp. 92-3.

4: Stannus D-5 (ca. 1909) 1910 FT7 Yao FT7
Maravi FR4

A man seeing a cloud coming up and wishing to prevent rain, ties a knot in the grass by the side of the path along which he is going. M 789 821

In January, 1907, there was a drought in Fort Johnston district, so the chief Mpondo and all his headmen visited a man called *Bimbi* (*bimbi* = prophet), a lesser chief, to ask for rain. They all adjourned to the forest, where *Bimbi* received them outside a hut, and having taken their presents, 50 yards of calico or less, he entered this hut and for a quarter of an hour went through certain incantations. He then appeared again and asked what was wanted. He was asked to give them rain. After again entering the hut and conferring with the spirits he announced rain for a certain day; this was received with clapping of hands, and then everyone lay down prone with the hands by the face and heads towards the hut. The spirits are said to be a male and female snake. God is said to speak to them, these to *Bimbi*, and *Bimbi* to the people. Rain did not fall on the day mentioned, but soon afterwards. [776]

Chisimba: a man wishing to have medicine to make himself bullet-proof would be told to have coitus with his sister or mother. This is *chisimba*, after which medicine is given to him. A man known to have done this near Mpondo's village was threatened with death by Mpondo, and therefore fled. M 789 835

Testicles of sheep, antelopes, etc., are eaten usually with medicine with the idea of gaining sexual power. M 831 825

A chief eats alone to avoid being given poison. M 2[illegible]

A woman in child will not look at a picture or image lest the child be born with some deformity. Fright is said to cause monstrous births. 622 M [illegible] 848]

A woman, when she conceives for the first time, that is, when a newly married girl is pronounced to be *ewoinde* by her mother, attends a dance, and her head is shaved in front as far back as the ears. She may not talk to any man except her husband for a month. In older times this restriction extended till the time she was confined. M [302]

A man used never to speak to his mother-in-law till after the birth of his first son. Neither a man nor his wife will eat in company of their mother or father-in-law until after birth of a child. If a man sees his mother-in-law eat he has insulted her and is expected to pay damages. If a man meets his mother-in-law coming along the road and does not recognise her, she will fall down on the ground as a sign, when he will run away. In the same way a father-in-law will signal to his daughter-in-law; the whole idea being that they are unworthy to be noticed till they have proved that they can beget children. M 606 M [889]

CLANS.

All Mahenje, Yao, Makololo, and Chikunda tribes are divided into clans, each with a separate name. Children take the clan-name of the mother, and members of the same clan are regarded as brothers and sisters; they are blood relations and may not intermarry. M V 614

4: Stanzus D-5 (ca. 1909)1910 FT7 Yao FT7
Maravi FR4

M Y 614 [579] Men of the same clan must help each other. Two men of different clans fighting will be joined each by men of his clan; such two men may be interfered with and stopped fighting by someone of the same clan, but not by others. A fight between men of different clans is a lasting thing, not so a quarrel in the clan.

Every clan has a (king) *Karonga* and a (prince) *Chilembwe*, who is his son. These grades are only found among the Nyanja peoples.

M Y [269] [554] The Karonga may break bones when eating—this is significant of his power to break anything; the Chilembwe may not do so, being without land. Neither may eat while walking. These two are always chiefs.

Clan names.—In Machila men's songs one hears a number of clan names repeated sometimes.

After sneezing people sometimes exclaim, "*Hunna ou* . . .; *Mdenkula ua* . . .; *Kubala lwa* . . ." (giving name of clan).

A man hearing another say this asks him, "Where do you come from?" He tells him, giving him names of his father and mother, etc.; if he does not know them he gives names of generations before.

The following are a few clan names:—

Achitolo, small rat.
Awamvula, rain.
Atimbiri, puff-adder.
Achikulwake.
Achikalina.
Achingwanse, thunder.
Achimwende, cloud.
Awwali-mpwi, hartebeeste.
Ambiwi, pig.
Ang'ono, birds.
Achiumbe, fish.
Achinowule.

MARRIAGE.

M 584 A man seeing a girl he would like to marry deputes his brother to go to the brother of the girl, who then calls the girl's maternal uncle, and he speaks to the mother on the subject. The mother consults the girl; if she refuse, nothing further is done. If she consents, the man calls his relations to come and be witness of his taking the girl as his wife; they meet in the *Dzala*. A house is assigned to the M 585 man in the village of the girl and there they go to live.

After six months the mother of the girl prepares beer. The uncles of the young couple, mothers, fathers, sisters, and brothers are invited. The girl's maternal uncle then speaks, addressing himself to the maternal uncle of the husband, saying, "We have called you here to drink beer and to see the house of your brother that you may return when you like. Should anything arise between these two newly married ones in the nature of a dispute, let them come to their respective uncles about the matter."

Then five pots of beer are drunk in the village, two are reserved for the witnesses to drink in the evening, and one for the two fathers and the headman.

9:Lawson Y-5 (ca. 1940)1949 FT7 Yao FT7
[P.190A] MARAVI FR4

M 592 in-law in place of sons; and it is unlikely that many, indeed any, of his brothers will be
M 361 able as A has done to overcome matrilocal prejudice. Many relatives, however, live close by,
592 having broken apart from an originally large homestead; less than a mile off live an elder sister of A's mother, (*mai mamkulu*), with a married daughter, and perhaps a mile in the other direction live his mother's mother's brother and his mother's brother, (both *ambuye*), with their families of married daughters and granddaughters, unmarried sons and grandsons—a homestead of seven or more huts. Moreover, about fifteen miles to the East, near the shore of Lake Chilwa, is the original settlement of the Saima clan, to which A belongs through his mother and where, but for the peace brought by the Europeans, he and all his scattered relatives would probably still, he says, be living. Thus, though the average homestead to-day numbers, say, ten to fifteen huts, another part of the original family unit, (*mbumba*), is often to be found in a second small homestead not far off, and large compact villages of up to forty or fifty huts are still not uncommon. One chief's village I know has twenty-six huts, another beside the Shiré has thirty. Both these are matrilocal homesteads inhabited (if my informants were truthful) only by relatives and affines.

Y M 602 The examples cited show how strong is the kinship tie even under modern disruptive influences, and suggest how all-powerful it once was. I have called it a key to Nyanja and Yao society, for I believe their culture derives from it at every point: marriage, homecraft, agriculture, education, religion, were all bound up with the *mbumba*. But my aim here is not to describe the tree, merely to try and unearth its roots; and so, with one suggestion as to how these roots are entwined, I must end.

● Y M ● 614 We find among the Nyanja and Yao vestiges of an exogamous matrilineal clan system which hint at a possible origin of cross-cousin marriage. Any Nyanja or Yao will tell you that he inherits from his mother membership of a certain clan,

9:Lawson Y-5 (ca.1940)1949 FT7 Yao FT7
MARAVI FR4

[P.190 B]

Y
M
614 (*mtanda*, or among the Ngoni and the Nyanja influenced by them, *mfumba*),—say the Mwales'.
Y
[582] His father is of another clan—as likely as not the Milanzis'—for it is considered incest for two
M Mwales to marry. He will tell you that he addresses
Y every Mwale he meets, even a stranger from a
[608] far village, as "brother, sister, father, mother",
[609] (*achimwene*, *chemwali*, *atate*, *amai*) according to age and sex, and feels obliged to offer them help and hospitality—although this feeling is in most parts dying out. The Milanzis of his own generation whom he meets he considers in the same way as his cousins, (*anwanzi*), and treats, or used to treat, with the same friendly familiarity as his real cross-cousins at his father's home village.

M This extension of brotherhood to one's mother's,
174 and cousinship to one's father's, whole clan,
614 suggests that the Nyanja clans (into which possibly
[602] the Yao married) may have grown each out of an extended family group, (*mbumba*), living or travelling together. Cross-cousin marriage would
M follow naturally on friendship between two
[582] such nearby groups, for after a few generations of intermarriage the groups would become so connected that a man born into the one and marrying into the other would in actuality be marrying his cross-cousin. Moreover there is a tradition,
M at least among the Nyanja of Zomba District,
[173] which bears out the evidence of the relationship terms. Old people tell how the earliest leaders of their tribe entered the country, each surrounded by his *mbumba*, and settled first here then there ; they explain how each group came to be named, and how lasting friendship arose between the Amwale under Chief Mpoto and the Amilanzi under Chief Saima, and similarly between the Apiri and the Ankhoma, the Ambewe
M and the Achanza. Whatever truth lies behind
177 this tradition, it is certain that to-day, however
601 scattered the clans may be and however generally
582 the young men reject cross-cousin marriage,
614 yet a Mwale still calls "cousin" every Milanzi he meets and treats their women as potential mates ; and the same holds good between the Phiri and Nkhoma, Mbewe and Chanza clans.

11:Sanderson D-5 (ca. 1920) 1920 FT7 Yao FT7

601 408 knows that he is not legally justified in "entering into the name" is loath to do so, as he knows that he is not expected to make a successful chief. The defeat of Salima, the fifth Makanjila, by the British in 1893 was, and still is, ascribed to the fact that he belonged to the male line.

The term *chipwa* (*mwipwangwa*, "his *chipwa*") may be used for any child of a sister. A female title (common amongst the Yao) descends to the eldest daughter of the eldest son of the bearer of the title.

589 601 *Marriage.*—Relatives who are forbidden to marry are called *achidawako*; they include all those given in the table except *achidani*, *achiwenkulu* ("grandchildren"), and the wife of the maternal uncle. An heir, on succeeding, may marry the wife or 589 wives of his maternal uncle, but not if he has previously married one of his daughters.

It is legal, though rare, for a man to marry the daughter of his own child (*chiwukulu*).

614 601 "*Brothers*" *and* "*Sisters.*"—The term *ulongo* is used to describe an exogamous clan, and the members are known as *ulongo* (singular)—*achalongo* or *da chilongo*, collectively. This word *ulongo* is probably a corruption of *wa ulongo* ("in the clan") as it requires the use of the term *mjakwe* (*ajao*) "a companion," instead of the possessive pronoun. Thus *ulongo mjakwe* (*achilongo ajao*), "his (their) clan relatives" (instead of *ulongo jwakwe*, *achalongo wao*).

601 There is no general term corresponding to the English "brother." The nearest is *alumbu*, which describes the relationship between a "brother" and a "*sister*," it is rarely used by women, however.

The elder "brother" of a man is called *akulu* or *achiwenge*. These terms are used for all sons of a father's elder "brother" or of a mother's elder "*sister*," and for the elder brother by the same parents. They are also used by a woman for any "brothers," elder or younger, senior or junior, in preference to the term *alumbu*.

Mpwanga is used for a son of a father's younger "brother" or of a mother's younger "*sister*," and for a younger brother by the same parents. It is used by a woman for her "*sisters*" in exactly the same way, but is never used by a woman of a man.

A man calls his "*sister*" *chemwali*, collectively, *mwanjaw chemwali*; a girl refers to an elder, or senior "*sister*," by means of the same term; a man refers to a "*sister*" as *alumbwangu* or as *chemwali*.

The term *chiwukulu* is used for a "grandchild" (*mwiwukulwangu*, "my 'grandchild'").

"*Father*" *and* "*Mother.*"—A paternal aunt is distinguished as *atati wakongwe* ("female father") if necessary, though she is, of course, not addressed as such. The elder brother of a father is referred to as *atati wakulangwa* ("the great father"), his younger brother as *atati wanandi* ("the little father"). Other *achatati* are similarly distinguished.

1: Tew E-4 (no date) 1950 FT7 Yao FT7

105 All these peoples have in common the following points of social organization: matrilineal clans, matrilocal marriage, residence in small villages under independent chiefs or headmen. They have elaborate initiation schools with circumcision for boys, and initiation without an operation for girls. It is mainly by variations in the initiation rites that their cultures can be distinguished from one another. They also distinguish themselves by linguistic variations and by cicatrizations. This is the region of the [301] *pelele*, or lip-ring, although Yao do not wear it.

THE YAO

TRIBAL AND SUB-TRIBAL GROUPINGS AND DEMOGRAPHY

NOMENCLATURE

101 The name of the tribe is spelt and pronounced in a variety of different ways: Yao, Ayo, Veiao, Hiao, Wahiao, Wahaiao, Wahyao, Ayawa, Myao, Achawa, Wajao, Adjao, Mujoa, Mujanos, Adsawa, Adsoa, Mudsau. Sometimes they are referred to by the name of one of the sections of the tribe or of one of the leaders: e.g. Amachinga, Amangoche, Massaninga (also spelt Amasaninga and Amazaninga), Chiwala, Katule, Kalenje, Mdeule.[1]

GROUPING

101 131 64 The Yao claim a hill called Yao, near Muembe, between the Rivers Lujenda and Luchilingo, as the original centre from which they dispersed. The main body of Yao is in Portuguese East Africa, and there are large settlements in Tanganyika and Nyasaland.

(*a*) *Portuguese East Africa.* The two main divisions of Yao in Portuguese East Africa are around Muembe and around Mtarika, on the Lujenda river.[2] Immediately south of the lower Ruvuma and at its mouth there are two smaller groups. The Yao occupy most of the territory between the Msinje, Luchilingo, and Ruvuma rivers in their upper courses.[3]

(*b*) *Tanganyika.* Yao entered Tanganyika Territory at two separate periods. In the 1850's they immigrated into Masasi, Chiwata, Newala, Tunduru districts and around Mikindani and Kyonga.[4] The other two groups are more recent comers: one (about 3,000), were taken as war-captives by the Ngoni in Songea district; the other (about 45,000), in the upper Lukuledi valley in Lindi district. They came in from Portuguese East Africa about 1912.[5]

(*c*) *Nyasaland.* There are four main groups of Yao:

(i) The largest group lives in the Southern Province, in upper Shire, and south Nyasa districts.

(ii) The second is near Blantyre, Chiradzulu, Zomba.

(iii) A small group is settled in a belt on the west coast of Lake Nyasa at Domira Bay.[6]

[1] Heckel, 1935, p. 7 n.; Hetherwick, 3, 1902, p. xviii; Abdullah, 1919; Burton, 1873, p. 81 n.
[2] *Handbook of Nyassa Co.*, 1898, p. 20.
[3] Johnson, W. P., 3, 1893.
[4] Weule, 1, 1909, p. 140.
[5] *Handbook of German East Africa*, pp. 56, 62.
[6] Murray, 1932, p. 246; Lawa, 1934, p. 37; Hetherwick, 4, 1927, p. 185.

1: Tew E-4 (no date) 1950 FT7 Yao FT7

(iv) Another group is on the south-west side of the lake, north of the Ngoni at Dedza and east of the Ngoni of Ncheu district.[1]

Although these are the main concentrations of Yao, smaller communities are scattered through most of the districts of south Nyasaland.

MAP SHOWING MORE IMPORTANT SITES CONCERNED WITH YAO INFILTRATION

Distribution of Yao shown as a percentage of the population of each district (1931 Census)

Over 50%:	South Nyasa	75%	10–20%:	Dedza 16%
	Upper Shire	60%		Dowa 8%
				Mlanje 6%
30–40%:	Blantyre	38%		Cholo 5%
20–30%:	Chiradzulu	26%	1–5%:	Chikwawa 2%
	Zomba	26%		Ncheu 1·3%

History

Nothing is known of the history of the Yao before their settlement at Muembe.[2] Their contact with the Arab traders from the east coast had probably continued for 200 years before the Europeans arrived.[3] When Lacerda wrote in 1798 the Yao were

[1] Codrington, 1898, p. 512.
[2] Stannus, 4, 1922, p. 231; Heckel, 1935, p. 7; Murray, 1932.
[3] Livingstone in 1866 noted the strength of Arab influence.

2: Mitchell E-5 (1946-1949) 1956 FT7 Yao FT7

TABLE XX

WHEN INITIATION RIGHTS WERE GRANTED TO NEWCOMERS AND INVADERS

622
643
554
881

Type of Initiation Right	By early Chiefs		By recent Chiefs*		Total
	Invaders	Newcomers	Invaders	Newcomers	
Both init. . .	8	6	3	2	19
One init. only .	9	10	3	14	36
Total . . .	17	16	6	16	55

* This is obviously a crude classification. I have taken roughly 35 years as the dividing line. As the early chiefs I have classified all the Kawingas before and including Kawinga V who died in 1913; all the Liwondes before and including Liwonde III who died in 1921; all the Ngokwes before and including Ngokwe IV who died in 1905; all the Mposas before and including Mposa II who died in 1913; and all the Chikweos before and including Chikweo II who died in 1914.

In other words, recent chiefs have been granting single initiation rights to Invaders in the same proportion as they have been granting both rights, but they have been granting Newcomer headmen the right to hold only one ceremony more often than the right to hold both. Of the six sets of rights to initiation ceremonies granted by recent chiefs to Invader headmen, three were rights to hold only one ceremony, while 14 of the 16 initiation rights granted to Newcomer headmen were for one ceremony only.[1]

622
554
881
795
619

Headmen do not make use of their bonds of common religion or tribe with the chief in their competition for initiation rights. Table XXI sets out the numbers of headmen of different religion. There is a substantially smaller proportion of Pagan headmen (9·7 per cent) holding initiation ceremonies than either Christians (25·5 per cent) or Moslems (24·4 per cent).[2] Most Pagans, however, are also Newcomers so that this difference is actually a reflex of the generally lower rank of Newcomers. Table XXII sets out the number of headmen of the chief's tribe and of other

[1] i.e. 50·0 per cent against 87·5 per cent; diff. of per cent = 37·5; S.E. of diff. = 20·08; C.R. = 1·87; p = 0·0614.

[2] Pagans = 9·7 per cent; Others 24·6 per cent; diff of per cent = 14·9; S.E. of diff. = 7·94; C.R. = 1·88; p = 0·0603.

2: Mitchell E-5 (1946-1949) 1956 FT7 Yao FT7

622
654
881
795
619

TABLE XXI

THE DISTRIBUTION OF INITIATION RIGHTS AMONG HEADMEN OF DIFFERENT RELIGIONS

Type of Initiation Holder	Moslem	Christian	Pagan	Total
Both init. rights . .	25	4	1	30*
Boys' init. rights only .	12	4	—	16
Girls' init. rights only .	31	6	2	39†
No init. rights . . .	211	41	28	280‡
Total	279	55	31	365

$n = 6$; $\chi^2 = 5{\cdot}05$; $p = 0{\cdot}53778$.

* Excludes 1 headman whose religion was unrecorded.
† Excludes 4 headmen whose religion was unrecorded.
‡ Excludes 2 headmen whose religion was unrecorded.

TABLE XXII

THE DISTRIBUTION OF INITIATION RIGHTS AMONG HEADMEN OF THE SAME AND DIFFERENT TRIBE AS THE CHIEF

Type of Initiation Holder	Same Tribe	Different Tribe	Total
Both init. holders	20	11	31
Boys' init. holders only . . .	7	9	16
Girls' init. holders only . . .	23	20	43
No init. rights	156	126	282
Total	206	166	372
% Init. holders	24·3	24·1	24·2

$n = 3$; $\chi^2 = 2{\cdot}17$; $p = 0{\cdot}54167$.

tribes who hold initiation rights. Once again the proportion of headmen of the same tribe as the chief who hold initiation rights is the same as that of headmen of different tribes from the chief. We may say, therefore, that membership of tribe is not an operative factor in the granting of initiation rights.[1]

[1] The factors contributing to the granting of initiation rights are obviously all intercorrelated.

III. The Entry OF THE WHITES

175 British started actively to pacify the country, the
648 sons of Mponda were at war with each other and Cingwalungwalu was on the way to dominating the whole of the west of the Shire River bank above the Murchison falls. After the British had demonstrated their efficiency by a few attacks on some of Nkata's forces, Kalembo approached the British leader and complained of the war in his territory. The British forces accordingly attacked and destroyed Cingwalungwalu's forces thereby leaving the way open for Kalembo to establish himself under the British wing as an important chief of the west bank of Lake Malombe. Amongst the chieftancies studied in this paper there appeared to have been no direct use of the British military forces in internal politics.[1] The Whites in this way immediately became a factor in tribal political organization. First of all some chiefs endeavoured to use the military force of the Whites directly in their tribal politics. Later on as military actions came to an end the power of the Whites continued to be tapped by chiefs and other personalities in the political structure in order to manipulate the tribal political set-up to their own advantage. In the main the power of the British Administration though still an active agent in tribal politics is now present as an abstract and invisible but nonetheless potent force. How this is done to-day I hope to be able to show by an analysis of the interaction of chiefs, African civil servants and village headmen.

101 As a foundation to this view of Yao politics,
175 the detailed history of the three chieftains Ka-
619 winga, Liwonde and Nyambi is illuminating.
643 Kawinga, Liwonde and Nyambi all belong to the same division of the Yao tribe, i.e. Macinga. There are about nine such divisions but only four are to be found in Nyasaland. The Acisi live near the Portuguese East African border in the Fort Johnston area (Katuli's area) and the

101 Amasininga in the Makanjila area of Fort Johnston District, i.e. to the east of the south end of
619 the Lake near Fort Maguire. These two divisions
175 are insignificant when compared with the other
643 two divisions in Nyasaland. The third division is the Mangoce Yao now settled around Blantyre, while the last division, the Macinga, are settled between Fort Johnston district and Zomba. These divisions arose from a breaking up of the Yao tribe which originally occupied the territory between the Rovuma and Lujenda Rivers in what is now Portuguese East Africa. These divisions are not very significant to-day. Members of a division recognize that they are more closely related to each other than to the members of another division, but this does not appear to affect modern political life in any way.

619 The first Kawinga, Liwonde and Nkata[1]
175 all belonged to the Macinga division which had settled near the tip of Lake Amaramba where it
551 empties into the Lujenda River. From this place of origin, the groups associated with these early
643 leaders moved into Nyasaland. In addition to belonging to the same division of the Yao tribe the three leaders mentioned also had the same clan-name, viz. *ambeme*.[2] The term that I have translated as clan-name is the Yao word *hukaryo*, which may also be translated as "kind" or "sort". Thus, if one asks a man the "kind" or "sort" of Yao he is, his answer may refer to the major divisions as above, i.e. Macinga or Mangoce or it may refer to the clan-name. Clan-names are inherited matrilineally, but holders of the same name are unable to trace their descent from a common ancestor. People with the same clan-
[582] names formerly did not marry but this prohibition has fallen away. For the commoners the clan-name seems to have lost most of its significance but it is carefully remembered in the royal lines and lines in which the rank of a village headman is passed down.

643 The present Kawinga and the present Liwonde
551 can trace their descent matrilineally from a com-
175

9:Lawson Y-5 (ca.1940)1949 FT7 Yao FT7
MARAVI FR4

[P. 180C]

and Yao tribes, who there predominate. These peoples seem to have come from different parts of the continent. Their languages, despite a common Bantu descent and much recent borrowing, remain as distinct as possible and are obviously not modern dialects of one more primitive tongue ; their original social structures must, however, have been similar enough to attract them to each other, for they have so intermarried and their customs so fused, that one can now scarcely distinguish their ways of life and village organization. Indeed, while homesteads of apparently pure Nyanja and Yao still predominate, every considerable district contains members of both tribes, with some people, at least, of mixed descent ; moreover, and although one perceive a difference of character and manners, and trace it to the influence of Mohammedanism on the Yaos, one may well be unconsciously exaggerating. This account of relationship terms, (with brief reference to underlying social structure), must be taken, therefore, to cover the fusion of two once-separate tribes, and Nyanja and Yao equivalents must—unless otherwise stated—be understood as identical in meaning. In fact, Nyanja often prefer Yao terms to their own.

How far can one isolate the Nyanja-Yao social structure in order to study it ? Ngoni immigrants in this district are few, and their original patrilineal social system has largely succumbed to the customs of these earlier comers. The matrilineal system of the still more recent and numerous Lomwe immigrants is, I believe, (though my evidence is fragmentary), exerting a considerable influence on the somewhat dissimilar but also matrilineal Nyanja and Yao.

1: Tew E-4 (no date) 1950 FT7 Yao FT7

lihele (plur. *mahele*), a breast. This includes all who are supposed to be descended from a common ancestress. Often the direct line of descent from the founder ancestress is not known for more than three or four generations. The small groups which can definitely claim to be 'of one breast' constitute the distinct matrilineal groups which live together in separate hamlets within a village. Each is undifferentiated in relation to other matrilineal groups, but internally each is differentiated on the principle of sibling unity. 614 613

The main emphasis of the kinship system is on the bond between a man and his sisters. Their relationship is summed up in the word *mbumba* (translated by Mitchell as 'sorority group'). A man speaking of his *mbumba* refers to all the women he calls sister, their daughters, and their daughters' daughters. Strictly speaking, female kin in the ascending generations are excluded, as belonging to the *mbumba* of his mother's brother. The 'warden' of a sorority group, *atyene mbumba*, is the senior of the brothers and is responsible for the behaviour of the women in his charge; he appears for them in court and pays fines on their account. He plays an important part in the marriage negotiations. It is his duty to consult the diviner if his sister or her child falls ill, and to be chief mourner at the funeral of either of them, also providing medicine for the ritual purification at the end of the mourning period. Formerly these obligations were balanced by certain rights. He could sell some of them into slavery for his own personal reasons. This privilege is ended, but even to-day it is through his sorority group that a man achieves status and independence. 593 602

The principle of sibling unity is expressed in many other ways. A man and his sister reciprocally call each other *acimbwangu*. More usually, a woman calls her brother, older or younger than herself, *acimweni* (a term of respect usually applied to a chief), for any brother may be regarded as warden of her sorority group. A man has the same duties to his younger brothers as to his sisters, so they also call him *acimweni*, but he calls them *mpwanga* 'younger brother', as they can never be in the position of warden in relation to him. Maternal uncles are called *akwelume*, and a sister's son *cipwa*. 601 602

Within each matrilineal descent group, differentiation takes place between members according to whether they are siblings or not. A man's sorority group included ideally his own siblings and their female matrilineal descendants. His sister's daughters are also the sorority group of his sister's son, their brother, so that any woman can belong at any one moment to the sorority groups of her brother, her mother's brother, her mother's mother's brother, &c., but the effective one is that of her own brother, if adult. He is consulted first in small disputes, and at the marriage ceremony each party is represented by a brother as well as by a mother's brother. In the break-up of a hamlet (described below, p. 12), siblings tend to hold together more closely than cousins and to form groups of their own, so that each woman in the descent line is a potential point of cleavage. Tension between brothers as they compete for control of the sorority group is a source of friction within the sibling group which eventually leads to its disruption. 602 593 578

Since marriage is mainly matrilocal, and extra-village, the husband in his wife's village is seen as a stranger by all the members of her matrilineal descent group. There is a tendency for members of such descent groups to live together in a cluster of huts. The word 'hamlet' is used by Mitchell to indicate a cluster of huts, in which 591 621 614

1: Tew E-4 (no date) 1950 FT7 Yao FT7

621 every adult member is a matrilineal descendant of a single ancestress, or a spouse of
619 one of these people. All husbands are called *alamu* by the male members of the descent group, but husbands call each other by the kinship terms for older and younger
[601] brother (i.e. *acimwemi* or *mpwanga*) according to the seniority of their wives. Similarly undifferentiated in kinship terms are the wives of all men of the descent group, who call each other 'sister'.

591 The husband is expected to work in his wife's garden, to help his mother-in-law,
606 and also, in the early stages of marriage, to avoid her. His attitude to his father-in-law is one of respect, relaxing as time goes on. His attitude to his wife's brother is also one of respect, which covers feelings of latent hostility. Although husband and wife's brother co-operate in affairs relating to the woman and her children (e.g. they jointly consult the diviner in case of illness, and the brother-in-law hears grievances the husband may have against his wife), there are elements of conflict arising from their competition for the affection of the woman and her children.

591 Patrilocal marriages are the rule in certain cases. The village headman commonly
622 has his wife in his own village. At his death his widow may return to her own village,
613 but if her daughters have married locally she may stay, and one of her sons, as warden
621 of his sisters, will also stay and marry patrilocally, as did his father, the headman. Thus a new matrilineal descent group, linked to that of the headman by a patrilineal link, develops. In every generation the number of separate but related matrilineal descent groups would double, and at such a rate of proliferation it might be expected that any village would contain many family groups. In fact, however, most members of a village can trace their descent from a common ancestress removed not more than about five generations. There are two reasons for this degree of homogeneity in the kin-grouping in the villages. One is that the villages tend to split up as they become
[582] too large and complex. The other is that the introduction of a new matrilineal descent group is often avoided by a cross-cousin marriage by the headman of the village or the warden of a sorority group.

605 There is a joking-relationship between cross-cousins, that is, for example, between the village headman's children and his sisters' children. The latter, as members of his
582 descent group, have interests and loyalties opposed to those of his own children. Although there is a strong tradition of cross-cousin marriage, such marriages are said to be likely to be unstable.

Betrothal and Marriage

584 Child betrothal was common among the Yao. Acceptance of a loin-cloth and the wearing of it was token of betrothal, giving the groom exclusive rights over the girl.[1] The negotiations for an adult marriage are conducted by senior matrilineal kinsmen of the parties, who at the subsequent ceremony act as witnesses or sureties to the marriage. Usually the senior is the mother's brother, and the junior the brother. The
585 act of validation, the *Cingonse* rite, takes place some time after the husband and wife have been living together. They meet in the hut of the woman for the rite, which consists in eating two pots of porridge, prepared by the female relatives of each party. The man's people bring a cockerel and the woman's a hen for relish. The exchange of food symbolizes the exchange of members of each matrilineal kin group, which is

[1] Macdonald, 1882, vol. i, p. 118; Johnston, 1897, pp. 411–13.

1: Tew E-4 (no date) 1950 FT7 Yao FT7

expressed also in the speeches by the marriage sureties. The couple are exhorted to refer disputes to the sureties, and to consult the diviner in case of sickness.[1] After the rite these two sureties have special responsibilities towards the couple; grievances are referred to them, and they must be present when adultery cases are heard in court. If the marriage witness ceremony has not been performed, the relationship is not regarded as legal and no adultery compensation can be claimed by the husband. 585

Divorce used to be a private affair, which was merely signalized by one party giving to the other an arrow as a token of separation.[2] Nowadays all divorce cases go to court. The woman is usually asked to choose between her husband and the adulterer, and the compensation paid to the former, if she decides to leave him, is higher—amounting to about 10*s*. A man can be sent away from the village by his wife's kin, but if he has given no grounds for divorce he can claim compensation and will also take back any gifts made to his wife. A few small gifts to his mother-in-law are not reclaimed. Divorces are easily obtained and frequent. Grounds for the divorce of a man may include failure to pay hut tax, one of the specific duties of the husband. 586 [431]

The custom of making a marriage payment is recorded by Johnson[3] (on the east coast of Lake Nyasa) as a relatively new adoption. When given it is divided between the bride's father, mother, and mother's brother and brother.[4] 583 177

Slavery

Domestic slavery was an important institution in the Yao social system. Slaves were obtained by capture, purchase, or in compensation for injury.[5] A man would pay a debt by giving slaves (wives or members of his matrilineal kin group) to his creditors.[6] A man might voluntarily enslave himself to a man having charge of many women, as a means of obtaining a wife.[7] The children of a free man and a slave woman were not emancipated, as their father could not take them from the village of their mother's master, who had the right to sell them.[8] Slaves took part in the ordinary life of the village; women slaves ranked as junior wives of their masters and shared the usual work of women. Men might be supplied with guns for hunting or might accompany their masters to war, trade for them, spin, weave, sew, make baskets.[9] The institution of domestic slavery was an expression of a dominant motif in Yao culture—the association of status with a large number of dependents. Its abolition by the British was in itself a major blow to the prestige and authority of the chiefs. 567 [554]

Information about the social organization of the Yao in Portuguese East Africa is scanty, but it is in agreement with what is known of the Nyasaland Yao; Heckel, who knew the Yao in Lindi district, Tanganyika Territory, confirms the correctness of Stannus's account of the South Nyasa Yao. 184 602

The Yao came into Nyasaland in small parties of kinsmen. Their experience and their superior weapons soon enabled them to dominate the Nyanja among whom they settled, and today they dominate the population of the Southern Province. They are organized into loose groups of villages, under petty, independent chiefs. They seem 175 [621] [631]

[1] Stannus, 4, 1922, p. 245; Hynde, 1893; Johnson, 5, 1922, pp. 69–73; Macdonald, 1882, vol. *i*; Werner, 1906, pp. 129–32.
[2] 1922, pp. 72–3.
[3] Stannus, 4, 1922, p. 280.
[4] Stannus, 4, 1922, p. 280.
[5] Werner, 1906, pp. 152–3; Stannus, 4, 1922, p. 237.
[6] Stigand, 1909, p. 122 (not a reliable source).
[7] Macdonald, 1882, vol. *i*, pp. 166–7.
[8] Ibid.
[9] Werner, 1906, p. 273.

CHAPTER I

THE PROBLEM IN ITS ECOLOGICAL SETTING

The Problem

At a joint meeting of the Royal Anthropological Institute and the International African Institute in 1948, Gluckman said: 'Many District Officers have described the village headman as the invaluable Non-Commissioned Officer of native administration. Yet despite various references in earlier literature to his important political, legal and ritual responsibility for his dependants, there has not yet been an adequate appreciation of his key position in the social structure.'[1]

In this essay, I have tried to examine this problem in relation to one of the tribal groups in British Central Africa. Gluckman pointed out that one fact among the diverse characteristics of Central African peoples is constant—people live in villages. This was observed by the earliest travellers in the region, who gave the English word 'village' to the groupings of huts they saw, and so this important point passed imperceptibly into the descriptions of the social organization of the peoples. Yet, perhaps because of its very obviousness, it is an interesting fact that no studies have been made of the position of the village as such in the social structure. It is clear that Lozi villages[2] and villages along the Luapula River, where the environment sets a stamp on the village composition,[3] are different from Nyakyusa villages where boys of one age-grade strike out to found a new village,[4] or from Ngoni villages where a diversified set of kinsmen

[1] Gluckman, M., Mitchell, J. C., and Barnes, J. A., 'The Village Headman in British Central Africa', *Africa*, xix, 2 (April 1949), 89–106.

[2] Gluckman, M., *The Economy of the Central Barotse Plain*, Rhodes-Livingstone Paper, No. 7 (1941), and his contribution to the symposium, *Seven Tribes of British Central Africa*, eds. Colson, E., and Gluckman, M., Oxford University Press for the Rhodes-Livingstone Institute (London, 1951).

[3] Cunnison, I., *Kinship and Local Organization on the Luapula*. Communication from the Rhodes-Livingstone Institute, No. V (Livingstone, 1950).

[4] Wilson, G., 'An Introduction to Nyakyusa Society', *Bantu Studies*, x, 3 (1936), and Wilson, M., *Good Company*, Oxford University Press for the International African Institute (London, 1951).

2: Mitchell E-5 (1946-1949) 1956 FT7 Yao FT7

121 adhere to a headman whose position is fixed in an historically
621 determined hierarchy.[1] Yet it stands the test of observation that there are in all tribes of this region small concentrated settlements of people who look upon themselves as groups, and who play an important part in the political activities of the community.

In my analysis of the social structure of the Yao, I have taken the village and tried to see it as a unit in a larger field of political relations. I have also tried to see it as a unit in itself, internally differentiated. I have taken the district under the jurisdiction of a Native Authority as the whole, the universe, which is to be resolved into parts. Before the British forces subjugated the
121 tribes of Nyasaland, there had been a period of intensive tribal
621 movement and intertribal warfare. Some groups had gathered
648 around successful warriors and maintained their identity; others had been broken and dissolved by stronger forces. The British conquest ended the period of military adjustment, and for administrative purposes the country was divided into districts. Within these districts some adherents gathered around their former leaders while others preferred to remain where they were. Tribes such as the Nyanja, who were the original inhabitants, remained in residence; newcomers such as the Lomwe immigrated from Portuguese East Africa. But when the Administration later officially recognized chiefs in these districts it was the successful Yao invaders who were recognized and not the indigenous Nyanja or immigrant Lomwe.

121 While the war-making units of the Yao—the tribal groups under numerous chieftains—were broken up by the British forces,
621 the smaller component units, the villages, survived. From early records and from the tales told by old men who can still remember something of the pre-White days, we know that the people have always lived in villages, though their structure has probably changed since those days. The villages were far and away the most important social units within any of the chiefdoms. The 'village' was and still is a key concept in Yao thought. I shall demonstrate later that it was the smallest group acting in the political field. At the same time it was, and still is, the field in which kinship was most significant. This is why I have taken

[1] Barnes, J. A., in his essay 'The Fort Jameson Ngoni', *Seven Tribes, and Politics in a Changing Society*, Oxford University Press for the Rhodes-Livingstone Institute (Cape Town, 1954).

2: Mitchell E-5 (1946-1949) 1956 FT7 Yao FT7

the village as the fundamental unit in my description of Yao social structure. I have tried to describe other social groups in a village context: for example, how lineages and families make up the village; how the religious congregations, particularly the Moslems, still organize their relationships on a village basis; and so on.

The position of the village in the social structure therefore has to be analysed from two aspects. Firstly, it is a unit within an organized whole—the chiefdom. Secondly, the village itself is a whole, with its own structure and morphology. Dividing the total structure into two sections and considering the village both as a part of a whole and as itself an organized whole, simplifies description. In fact, there is one continuum of social relationships, and the internal organization of a village reflects its position in the total structure. For example the fission of a matrilineage is significant in both the fields of kinship and politics, since through it kinsmen separate and found new villages.

Throughout this essay I use the word 'village' to mean both a concentration of huts and a social group. The two ideas are inseparable in Yao thought and it will be clear from the context of the sentence which meaning I intend. A word of warning is necessary here for those who are familiar with Administrative terminology in Nyasaland. The Administrative use of the word 'village' is different from mine. To me a village is a discrete cluster of huts occupied by a group of kinsmen who recognize their own identity against similar groups. The Administration has for its own purposes classified the population of each district into 'villages' under remunerated 'village headmen'. Very frequently these do not fall directly within the scope of this study. Wherever I refer to the villages in the Administrative sense I shall use the phrase 'Administrative village'; otherwise the word 'village' refers to the indigenous social group which I have defined.

In order to burden the reader with as few strange-sounding names as possible, and to spare him the task of learning many general village backgrounds, I have tried as far as possible to draw my illustrations from two villages, Ali Kasunka and Cikoja.[1]

[1] These names and the names of most of the characters in this book, except those of the well-known chiefs, are fictitious, so that their anonymity might be preserved.

2: Mitchell E-5 (1946-1949) 1956 FT7 Yao FT7

soon erected. As early as 1893 the Protectorate was divided into Administrative divisions and Collectors were appointed in each. Coinage was issued; a hut tax of 3*s.* was introduced; European claims to land and mineral rights were settled with the chiefs—all large estates were issued with certificates of claim; and a postal system was initiated. The old order of independent chiefdoms had gone for good and the Africans had to adjust their way of living to a new order.

The Village as a Unit in pre-White Times

Though there are earlier records of villages among related tribes, the earliest we have of the Yao are those of Livingstone.[1] In the records of his journeys up the Shire and the Rovuma Rivers, he states that the people lived in villages. Rowley's reports[2] of the Shire Highlands in 1861 show that the Nyanja were organized in villages similar to those of to-day, but the best reports on the Yao village are by Duff MacDonald, who worked as a missionary in the Shire Highlands and the Zomba area from 1878 to 1881. Duff MacDonald published both a general ethnographic account of the Yao around Blantyre and a journal of day-to-day events on the mission. From these descriptions we are able to reconstruct much of the political organization of Yao groups before the Whites came to Nyasaland. Though the information from these early accounts about the internal structure of villages is scant, the reports of the importance of domestic slavery are good, and this is valuable in assessing its effect on the internal structure of modern Yao villages.

From MacDonald's description it appears that each Yao chiefdom was a congeries of almost autonomous villages. The headman of these villages recognized the superiority of one of their number whom we may call 'chief'. The unity of each village and its corporateness were expressed in many ways. One of these was in connection with the worship of ancestor spirits. MacDonald writes:

> [The village headman] is the recognized high priest who presents prayers and offerings on behalf of all that live in his village. . . . It

[1] Livingstone, D. and C., *Narrative of an Expedition to the Zambesi and its Tributaries, and of the Discovery of Lakes Shirwa and Nyassa. 1858–64*, John Murray (London, 1865). Waller, *Last Journals*.

[2] Rowley, *The Story of the Universities Mission*.

2: Mitchell E-5 (1946-1949) 1956 FT7 Yao FT7

began to appear in the Territory. The chief in this situation had the same wants as his subjects but was in no way able to satisfy them. He was precluded by his position from becoming a labourer and thus securing a cash income, while his subjects, until recently dependent on his monopoly for their wealth, had been drawn into the new economy of the Protectorate and were comparatively affluent.

The cessation of warfare and slavery thus affected the prestige of the chiefs seriously. The Administration's policy was at first to impose a fine of guns on those who broke rules. In July 1894, for example, Chapola village on the south-west corner of Lake Malombe was fined 30 guns for being in possession of slaves.[1] Later the Administration introduced an ordinance requiring the registration and licensing of guns, and many guns were confiscated on account of breaches of this regulation. Not only were the Yao disarmed, but the Administration also punished those who broke the peace. At the same time the Government was pursuing an active policy against domestic slavery. For example, in the village of Chapola mentioned above, 26 slaves were released. The slaves, formerly bound to their masters by the physical sanction of being liable to death at his hands in cases of desertion, were now liberated. It is not surprising to find the Collector at Mlanje reporting, in 1895, that the power of Kuntirimanja and Matipwiri was failing, and that they were losing people.[2]

Statements of informants confirm that slaves were then starting to leave their erstwhile masters to set up villages of their own. In 1904, the Administration reported: 'The tendency is for the old large communities to be broken up; for the small man to collect a surrounding of friends and go off and build new hamlets in other localities'.[3]

From my own investigations, there appear to have been two possible reasons for this. First, communities may formerly have lived in consolidated groups in order to protect themselves from slave-raiders and other assailants. With the disappearance of the slaver and of war, the bond of the need for security would,

[1] *B.C.A. Gazette*, i, 10 (July 28th, 1894).
[2] *B.C.A. Gazette*, ii, 8 (June 15th, 1895).
[3] *The Annual Report of the Territory, 1903–4*, quoted by S. S. Murray (ed.), *Handbook of Nyasaland*, Crown Agents for the Colonies (London, 1932), 188.

2: Mitchell E-5 (1946-1949) 1956 FT7 Yao FT7

175 therefore, be weakened, and the component parts of the village
567 scattered. This is what the Administracion argued when it
621 wrote about the split-up of communities: 'This tendency is to
648 some extent gratifying, in that it originates in the native's sense of his complete security under the existing Government.'[1] I have not much evidence that this is true, and in fact do not think it is. Second, there is little doubt from my village histories that the slave-groups attached to various village headmen were deserting their former masters and setting up independent villages.

175 It is significant that the report speaks of the 'old large com-
361 munities'. Duff MacDonald, writing of the Blantyre area in
621 the period 1877–81, says: 'Usually the natives live in small
648 villages containing 10 or 11 huts, occasionally in large villages containing three times as many. They do not like to pack themselves closely. In time of peace few villages contain more than 100 people.'[2] Hynde, writing of the Domasi area, says: 'Sometimes a village consists only of five or six huts; more commonly twelve or twenty and rarely above thirty. The chief's village at Domasi consists of more than 100 houses but that is an exceptional case. The villages occur at intervals of quarter to one mile.'[3] In July 1895, the Collector at South Nyasa made a census of all the villages on the west bank of the Shire (64 villages). These were mainly Yao, but also included some Nyanja. The modal size of villages, calculated from his published figures, is 26 huts.[4] The reports of MacDonald and Hynde agree well, although they describe different areas. The Collector's average was slightly larger, but one is not sure that he has not included two or three settlements under one headman. A village, Changali, was marked as having 217 huts, but a note indicated that they were scattered. Also the numerical accuracy is not above question because a large proportion of hut totals end in 0 or 5, indicating estimation rather than enumeration. From my own observation, the arithmetic mean of a sample of 37 villages in two separate areas was 11 huts (mode was 8 huts).

It seems, therefore, that the optimum size for Yao villages has always been about 10 to 15 huts, and that the disintegration

[1] *Annual Report of the Territory, 1911–12*, Murray, *Handbook*, 128.
[2] MacDonald, *Africana*, i, 145.
[3] Hynde, R. S., 'Among the Machinga People'.
[4] *B.C.A. Gazette*, ii, 3 (Sept. 1895).

2: Mitchell E-5 (1946-1949) 1956 FT7 Yao FT7

noted by the Administration in 1904 was in fact the break-up of larger communities under important village headmen. These communities were, as is evident from MacDonald's writings, largely made up of slaves and their descendants. In the light of the internal structure of modern villages, I believe that the fragmentation going on at that time was due to the breaking of the bond between captor and slave—a bond formerly reinforced by physical sanctions that included the killing of a slave by his captor. Therefore, while the groups thus linked to the headman may have moved out of his village, his matrilineal kinsmen, who were bound to him by bonds of deep sentiment and religious beliefs, remained. The irreducible 10 to 15 huts were therefore likely to have been those of the headman's own matrilineal kinsmen. When the Administration ascribed the continuing tendency all over the Protectorate to the splitting up of villages into small family groups [1] it was probably describing the splitting off of descendants of slave-wives to found villages of their own. While this process of readjustment was going on, the Administration stepped in with legislation designed to control what it considered to be unchecked social disorganization. The Administration spoke of the necessity to

175 361 621 648 175 621 648

> build up an organization to control the rising generation of natives who, finding themselves without the restraining influences to which their parents were accustomed, have of recent years evinced an inclination to emancipate themselves from the disciplinary responsibilities of village life and obedience to authority, and to adopt habits prejudicial to native family life.[2]

To accomplish this task the Government introduced the District Administration (Natives) Ordinance of 1912. This was the Ordinance about which the Administration wrote in 1913:

> Framed, as it has been, in accord with native ideas and practice, it is a measure which none the less avoids the defects of the archaic system of tribal rule and which has as its aims the gradual formation of a subsidiary local government by means of Sectional Councils of Headmen chosen as far as possible by natives themselves and presided over by the District Resident.[3]

---

[1] *Annual Report, 1911–12*, Murray, *Handbook*, 128.
[2] *Annual Report on the Protectorate for 1912–13*, Murray, *Handbook*, 129.
[3] Murray, *Handbook*, 129.

2: Mitchell E-5 (1946-1949) 1956 FT7 Yao FT7

175 Under this Ordinance, the Administration provided first of all for the formation of 'villages'. A Rule made under Section 3 of the Ordinance and published in Gazette Notice No. 113 of 1913, gave the Resident the power to concentrate the native population, where necessary, into organized villages of not less than 20 huts and to disallow the erection of isolated huts. 'In order to give effect to this policy the erection of new huts was to be confined to existing villages, and the occupants of isolated huts were to be instructed to remove, as opportunity offered, to an approved village.'[1]

175 The Ordinance then proceeded to create a line of authority from the District Resident to the villagers through Village Headmen and Principal Headmen. Districts in the charge of Residents were divided into Administrative Sections. A Principal Headman was put in charge of each. The Sections in turn were sub-divided into Village areas (groups of villages), each in the charge of a Village Headman.

Under the Ordinance, Principal Headmen and Village Headmen were given specific duties and responsibilities in their respective areas. The Principal Headman, for example, was:

> to be responsible for the good order of his Administrative Section, the maintenance of discipline, the reporting of crime and the apprehension of criminals, sanitation, the control of the movement of cattle, reporting outbreaks of epidemic disease, and for any other matters in the interest of law and order and the general welfare of the native community.[2]

The Principal Headman was also to 'secure the attendance at the Magistrate's court of natives whose presence was required in connection with deceased estates, remittances, government labour and so on, and to exert his influence to accelerate the payment of hut and poll taxes'. These duties in turn devolved upon Village Headmen—they were responsible for their smaller areas as the Principal Headmen were responsible for the larger.

Unfortunately we have no information about the way in which Principal and Village Headmen were chosen. Murray records that

> Residents were not necessarily to recommend those natives who had hitherto been recognized as Chiefs or Headmen. It was considered

[1] Murray, *Handbook*, 132. [2] Murray, *Handbook*, 130.

2: Mitchell E-5 (1946-1949) 1956 FT7 Yao FT7

CHAPTER III

THE COMPOSITION OF MODERN CHIEFDOMS

Chiefdoms in the Administrative Mould

361 NO less than in MacDonald's time, modern chiefdoms are in the first place organizations of villages. Physically, the villages consist of solid pole and daub huts of varying sizes. [342] Some huts are rectangular, twenty feet long and fifteen feet wide, with glass windows, panelled doors, and thatched roofs. Others are small and round, about eight feet in diameter. There is also a considerable variation in the compactness of villages: often the huts are only a few yards apart, but sometimes at least a hundred yards or more. Most villages, however, could be circumscribed by a circle of a quarter-mile diameter, though, of course, there are many exceptions. There is a slight tendency for the village to spread itself along a path, in a way faintly suggesting ribbon development, but on the whole there is no particular physical pattern to the Yao village. In fact, though most villages have fairly distinct physical boundaries, and are definitely discrete clusters of huts, some are difficult to identify in this way. To the minds of the local people, however, the ● 621 village is quite clear and distinct. This is because they see the village primarily as a social unit, and tend to impute into physical boundaries more definition than actually exists. It is in the social sense that I use the word here: the 'village' is a spatial group which recognizes its identity against similar groups.

The importance of the village in Yao structure can hardly be over-emphasized. Membership of a village provides the first index whereby people determine a stranger's background. If, after village membership is fixed, no other links can be found with a stranger, such as distant kinship, the relationship will remain at that level. A gossip identifies the person about whom 621 he is speaking by giving his or her name and the name of his 551 or her village. He says, 'Bt.[1] Mwana of Cigwaja village'.

[1] I use this abbreviation for the Arabic 'binti', 'daughter of'. Binti, pronounced 'biti' by the Yao, with Ali and Wadi, 'son of', appear commonly in Yao names.

2: Mitchell E-5 (1946-1949) 1956 FT7 Yao FT7

The chief identifies a man who comes to see him in exactly the same way, and the Administration has adopted a similar system, except that it has its own definition of the village. During the initiation ceremonies, the initiands [1] are housed in long grass sheds which are subdivided into sections. Each section or room of the long shed houses the boys or girls from one village. If villages share a burial ground, they have allotted portions where they bury their dead separately. In these and many other ways the village is looked upon by the Yao as a distinct unit in the chiefdom.

The chiefdom in the old days was distinctly a territorial unit and all the villages within that area recognized the superiority of the chief. The boundaries of the old chiefdoms were marked by rivers and hills and fixed after conquest and agreement. They are still well remembered. Modern chiefdoms are defined in their limits partly by Government decree and partly by custom. When Principal Headmen were appointed, the districts under them were demarcated with 'due regard being given to the composition of the Native population'. The traditional areas under the various chiefs, therefore, were recognized by the Administration as districts, so that the districts or their sections almost coincided with the chiefdoms. Some disputes between chiefs over boundaries have occurred from time to time and the Administration has had to arbitrate. For example, the Provincial Commissioner of the Southern Province reported a difference between Liwonde and Kawinga in 1936,[2] but through time these differences have been eliminated.

Traditional and Administrative boundaries do not coincide in a few places, for two reasons. Firstly, the Administration has accepted an obvious and physical boundary in preference to an indistinct and social boundary. It has taken the Domasi River as the boundary between Ntumanje and Mposa, though in fact a few villages under Mbela, Kawinga III's son, live on the south side of the river, and fall for Administrative purposes in Ntumanje's area. Mbela is still very strongly associated with Kawinga in ritual and kinship matters. His dealings with the

[1] I am grateful to Prof. Schapera for suggesting this word for those who are undergoing initiation ceremonies. The parallel is with graduands, i.e. those who are undergoing graduation ceremonies.

[2] *Report of the Provincial Commissioner, Southern Province* (1936), 20.

2: Mitchell E-5 (1946-1949) 1956 FT7 Yao FT7

631 advocates the more orthodox type of Islamic devotion in which
643 a quiet restrained manner is emphasized. As far as I know the
745 *twaliki* sect are confined entirely to Jalasi's chiefdom and the *sukutu* to Kawinga and Liwonde. In this matter, Nyambi's people side with Kawinga's and Liwonde's.

On the other hand, local informal organization is well de-
631 veloped so that Chiwalo who is at the point of juxtaposition of
643 Kawinga, Liwonde, Nyambi and Jalasi chiefdoms, may try cases
692 involving headmen from any of these areas, and they usually accept his arbitration. His is the nearest court house. The actual boundaries of the four areas, however, are very clearly recognized and Chiwalo realizes the limits of his jurisdiction. Though he may arbitrate in a difference between headmen, he would not dare to apportion land outside his area. Headmen living on the boundaries of two chiefdoms arbitrate in each other's cases ; the
621 villagers under them intermarry. A village in Chiwalo's may procure garden lands in Jalasi's area, and children may be initiated
631 at ceremonies held by headmen in other chiefdoms. There is no
643 clear break in the normal social relationships of people across the boundaries of chiefdoms, and their members interact as freely with each other as members of two villages of the same chiefdom. The cleavage between the villages on different sides of the boundary of a chiefdom becomes apparent only in special situations.

631 The formal relationships of the chiefs, set by the history of their conquests and their kinship, and incorporated in and slightly
643 modified by the Administrative framework, are overlaid by an informal local organization where the interaction of village headmen only conforms to the formal pattern when no agreement can be reached.

The Position of the Modern Chief

643 In ritual situations a chiefdom is clearly differentiated from its
769 neighbours, and many of these situations arise in the cult of tendence on the ancestor spirits. The ancestor cult has fallen
782 away almost completely among village headmen, but among the chiefs it is still strong, and appears particularly in the rain-prayers and the initiation ceremonies. Later, I shall discuss at length the importance of the chief's sanction before headmen may conduct initiation ceremonies. This is because the spirits

2: Mitchell E-5 (1946-1949) 1956 FT7 Yao FT7

643 him about the laws it intends to introduce which affect his people. The Administration transmits new Ordinances and Regulations to the chief and he must then relay them to the village headmen. When it advises the chief of a new law it thereby advises the people of his chiefdom.

The Origin of Villages in Modern Chiefdoms

175 We have thus far been looking at the chiefdom as an organization of villages united by their common interests in and
621 association with one chief. But the villages that compose the chiefdom are not all equally closely integrated into the political structure. This is most clearly seen against the background of how the modern chiefdoms came into being.

175 By the time that the 1912 Ordinance was introduced the social composition of the chiefdoms had undergone some change from
621 what it was before the White conquest. Before the White
563 conquest the Yao chiefs had overcome the indigenous inhabitants of Southern Nyasaland. Some of these had been allowed to remain in the area as subjects. Others were enslaved. There were some Nguru, Nyanja and Mpotola village headmen who had come to seek the protection of the Yao chiefs.

175 During the conquest, the territory was thrown into confusion, and villages fled in abandon from their own into neighbouring
621 chiefdoms both in Southern Nyasaland and Mozambique.
166 When the Administration allowed the chiefs to return, most of the important village headmen and their followers returned with them. Kawinga, for example, was allowed to return, not to Mount Chikala but to the area immediately to the north of it. He brought back with him most of his important headmen who had fled with him to the country of the Mpotola chief Nkanyela, in Mozambique. Jalasi was allowed to return from Portuguese Territory in 1906,[1] not to his mountain fortress Mangoche, but to a smaller hill Sakalwe some miles to the east. He gathered round him a few of his important headmen.

When hostilities ceased, there was a certain amount of internal readjustment. Some villages which had fled to other chiefdoms in the Protectorate started to come back while others stayed behind. To-day there are villages here and there which had left their chiefdoms in the confusion and had then joined their present

[1] District Book, Fort Johnston.

2: Mitchell E-5 (1946-1949) 1956 FT7 Yao FT7

chiefs. Mpumbe's village, which in 1947 was about 2½ miles from Kawinga's court village Nanyumbu, was originally one of Jalasi's adherents. Mpumbe fled with many others when the British attacked Mangoche in 1896. He went to the place where Lake Amaramba spills into the Lujenda River in Portuguese East Africa. When things seemed more peaceful, Mpumbe did not return to Jalasi's area, but preferred to seek his son Ngongondo, who had fled with a section of the village to Kawinga's area. He found Ngongondo at approximately the present site of the village, and settled with him. Ngongondo later moved eastwards to his present home in the Liwonde area. Both village headmen have achieved a certain amount of prestige in their new chiefdoms. Mpumbe was once a court assessor of Kawinga, and now holds girls' initiation rights. They have lost all touch with their former chief and are most unlikely to return to him.

A considerable number of Kawinga's villages moved into Mposa's and Chamba's areas, when they returned to the Protectorate. Their descendants to-day say that they did so because the soil was better in those areas than in Kawinga's.

Shortly after the British expedition, i.e. between 1896 and 1900, the Portuguese Government launched a punitive campaign against the Africans along the Portuguese–Nyasaland boundary. Many thousands of refugees came pouring into the Protectorate. Most of these were Mpotola and Nguru. The great majority settled where they crossed the boundary, i.e. round Chiuta, and Ngokwe chiefdom arose from some of them. After the Portuguese campaigns ended many other migrants came into the area. All those I questioned gave Portuguese ill-treatment as the reason for their coming across.

During the first decade of the century the movement, as in the initial invasion, was predominantly south-westwards—from Lake Chiuta towards the Shire River and Highlands. Now, however, the movement is gradual. The first movement of a group may bring it just within the boundary. Then the next movement may take it to the south and west deeper into Nyasaland. Some of my village case histories show this. Table III sets out some movements within Kawinga–Liwonde area (except Chiwalo).[1] I asked about the place of origin of all the villages

[1] I use Kawinga–Liwonde area to include the chiefdoms Kawinga, Liwonde, Mposa, Chamba, Ngokwe, Chikweo and Chiwalo.

2: Mitchell E-5 (1946-1949) 1956 FT7 Yao FT7

TABLE III

MOVEMENT OF VILLAGES WITHIN KAWINGA-LIWONDE AREA

621
175
166

Losers: \ *Gainers:*	Ngokwe	Chikweo	Kawinga	Liwonde	Mposa	Chamba	Totals
Ngokwe .	—	—	7	2	—	—	9
Chikweo .	—	—	2	—	1	—	3
Kawinga .	—	—	—	27	1	20	48
Liwonde .	—	—	—	—	—	4	4
Mposa .	—	—	—	2	—	9	9
Chamba .	—	—	—	—	—	—	—
Totals .	—	—	—	2	—	—	73 2

Totals above the diagonal represent movements south-westwards. Totals below the diagonal represent movements north-eastwards.

extant in Kawinga's section, which had arrived since the White conquest. My enquiries about the headmen who are recognized by Government were easy, but for those who are not recognized I had to rely on the memories of my informants and I know that many were left out. I am not aware of any bias, but realize that wide generalization from the figures is not safe. A glance at Map II shows that Ngokwe area is the most north-easterly area and Chamba the most south-westerly. The others are intermediate. Of the 75 villages only two had moved counter to this direction, i.e. from Mposa to Liwonde in a north-westerly direction.

I have no measure of the number of villages which have moved entirely out of the Kawinga-Liwonde area, either to other parts of Nyasaland or back to Portuguese East Africa. I have never heard of a village's moving back to Portuguese East Africa, though I have heard of their moving westwards and southwards, and of a few moving northwards.

In Table IV, I set out the origin of villages which have arrived in Kawinga-Liwonde area since the White conquest, and which are still there. This table shows quite clearly, that by far the biggest influx into these areas has been from Portuguese East

2: Mitchell E-5 (1946-1949) 1956 FT7 Yao FT7

TABLE IV

ORIGIN OF VILLAGES WHICH HAVE ARRIVED IN THE KAWINGA-LIWONDE AREA SINCE THE WHITE CONQUEST AND ARE STILL THERE

Origin	Ngokwe	Chikweo	Kawinga	Liwonde	Mpoza	Chambe	Total
Northern Areas:							
Fort Johnston . . .	—	—	—	6	—	1	7
Nyambi	—	3	—	1	1	2	7
Jalasi	1	—	10	6	1	3	21
Southern Areas:							
Malemia and Ntumanje	—	—	—	8	7	28	43
Zomba	—	—	—	4	7	4	15
South of Zomba . .	—	—	—	2	1	3	6
Other Nyasaland Areas:	—	—	—	3	—	2	5
Port. E. Africa . . .	13	76	111	37	6	30	273
Unrecorded	—	—	—	2	1	31	34
Total	14	79	121	69	24	104	411

Africa. We have no record of how many villages have been lost to the Southern or Northern area from Kawinga-Liwonde area, so that we cannot evaluate the significance of the gain of 64 villages from Southern areas, and of only 35 from the Northern areas. The density of population in Malemia's area is 268 per square mile, and the average density of the Shire Highlands is about 156·6. It may well be that there is now a movement out of the Shire Highlands into the less densely populated Liwonde-Kawinga area.

THE PRINCIPLE OF PRIMACY

Migration and invasion have been the keynote of Machinga histories: village headmen recount with pride how their ancestors moved into Nyasaland with their bands of slaves and followers. 'The East' is the traditional home of the Yao and even young men who have never been there proudly say, 'We come from the East'. This sentiment is reflected in the belief that the rains from the east are beneficial and give rise to good crops, while the rains from the west are detrimental and cause

2: Mitchell E-5 (1946-1949) 1956 FT7 Yao FT7

622 is when it is used by an Administrative village headman, as I
554 shall illustrate later, it will not serve a minor village headman
643 much to move out of one chiefdom to another if his object is to become recognized as an Administrative village headman. If he goes to another chiefdom he is automatically regarded as one of the most junior of the headmen. If he goes to another chiefdom as an Administrative village headman already, he takes with him his 'book' and to some extent the rank associated with it.

162 The size of Administrative villages as measured by the number
621 of tax-payers in them is about equal in all three categories
622 of village headmen. Table X sets out the distribution. The

TABLE X

DISTRIBUTION BY SIZE OF VILLAGES UNDER ABORIGINAL, INVADER AND NEWCOMER ADMINISTRATIVE HEADMEN

Tax-payers	Totals			Total	Percentages			Total
	Aborigines*	Invaders	Newcomers†		Aborigines	Invaders	Newcomers	
0–19	6	29	56	91	30·0	21·3	22·0	22·2
20–39	7	49	85	141	35·0	36·0	33·5	34·4
40–59	2	25	57	84	10·0	18·4	22·4	20·5
60–79	3	16	29	48	15·0	11·8	11·4	11·7
80–99	1	1	13	15	5·0	0·7	5·1	3·7
100–119	1	6	4	11	5·0	4·4	1·6	2·7
120–139	—	4	4	8	—	2·9	1·6	2·0
140–159	—	1	1	2	—	0·7	0·4	0·5
160–179	—	1	1	2	—	0·7	0·4	0·5
180–199	—	1	1	2	—	0·7	0·4	0·5
200–249	—	3	—	3	—	2·2	—	0·7
250–300	—	—	3	3	—	—	1·2	0·7
Totals .	20	136	254	410‡	100·0	99·8	100·0	100·1
Mean .	39·0	48·5	45·1	45·9				
S.E. .	8·7	4·2	2·8	2·2				

* Excludes one village whose size was unknown.
† Excludes 3 villages whose sizes were unknown.
‡ The total excludes an additional 10 villages for which full details were not recorded.

Administrative villages of the Aborigines, mostly Nyanja, appear to be rather smaller than those of the Invaders and Newcomers.

2: Mitchell E-5 (1946-1949) 1956 FT7 Yao FT7

There were only 20 villages in that sample and the difference may not be significant though the distribution is skewed to the smaller villages. The mean number of tax-payers under Invader village headmen was slightly larger than that under Newcomers, but the difference was not significant.[1] Among the Invaders are included the chiefs and *ndunas* who usually have villages of over 100 tax-payers. Smaller villages are less likely to break away from chiefs and *ndunas* than they are from Newcomers and less important men.

Village headmen may exploit their connections with the chief in their competition with their fellows for Government recognition. In Tables XI to XIV inclusive, I have used the material I collected in Mposa, Chamba, Chikweo and Ngokwe areas only, because I know that my survey did not include many headmen in Kawinga and Liwonde areas. The total in these tables includes both Administrative and non-Administrative village headmen. From Table XI it is clear that there is a

TABLE XI

PROPORTION OF ADMINISTRATIVE VILLAGE HEADMEN AMONG ALL VILLAGE HEADMEN OF THE THREE CATEGORIES IN CHIKWEO, NGOKWE, CHAMBA AND MPOSA AREAS

Type of Headman	Aborigines	Invaders	Newcomers	Total
Administrative . . .	12	61	77	150
Non-Administrative .	1	37	111	149
Total	13	98	188	299
% Admin. Headmen.	92·3	62·2	41·0	50·2

$n = 2$; $\chi^2 = 21{\cdot}34$; $p = 0{\cdot}00002$.

significantly greater proportion of headmen of Invader descent than headmen of Newcomer descent who are recognized as Administrative headmen.[2] The percentage of Aborigines who are Administrative headmen is highest of all but it is based on such a small number that not much value can be placed on it.

[1] Diff. of means = 3·4; S.E. of diff. = 4·5; C.R. = 0·76; $p = 0{\cdot}4472$.
[2] Diff. of per cent = 21·2; S.E. of diff. = 6·07; C.R. = 3·49; $p = 0{\cdot}00048$.

2: Mitchell E-5 (1946-1949) 1956 FT7 Yao FT7

TABLE XII

162 621 622

PROPORTION OF ADMINISTRATIVE VILLAGE HEADMEN AMONG ALL VILLAGE HEADMEN WHO ARE RELATED AND NOT RELATED TO THE CHIEF IN CHIKWEO, NGOKWE, CHAMBA AND MPOSA AREAS

Type of Headman	Relatives		Non-Relatives	Total
	Direct	Clan		
Administrative . . .	38	36	76	150
Non-Administrative .	16	24	109	149
Total	54	60	185	299
% Admin. Headmen.	70·4	60·0	41·1	50·2

$n = 2$; $\chi^2 = 17{\cdot}23$; $p = 0{\cdot}00018$.

Table XII shows that among the chief's direct relatives (i.e. those who can trace some direct link, matrilineally, patrilaterally or affinally to the chief) there are more Administrative headmen than among the relatives who are related only through clan links. Further, it shows that there are more Administrative headmen among the chief's relatives as a whole than among those headmen who are not related to him at all.

It seems probable also that village headmen have used their link to the chiefs through religion to prosecute their claims to rank. From Table XIII we see that there are more Moslem

TABLE XIII

PROPORTION OF ADMINISTRATIVE HEADMEN AMONG ALL VILLAGE HEADMEN OF THE SAME RELIGION AS, OR DIFFERENT RELIGION FROM, THAT OF THE CHIEF (ISLAM) IN CHIKWEO, NGOKWE, CHAMBA AND MPOSA AREAS

Type of Headman	Moslem	Christian	Pagan	Total
Administrative . . .	113	27	9	149
Non-Administrative .	93	31	21	145
Total	206	58	30	294*
% Admin. Headmen.	54·9	46·6	30·0	50·2

$n = 2$; $\chi^2 = 6{\cdot}97$; $p = 0{\cdot}03078$.

* Excludes 5 village headmen whose religion I did not record.

2: Mitchell E-5 (1946-1949) 1956 FT7 Yao FT7

Administrative headmen than either Christian or Pagan. The chiefs, of course, are all Moslem. 162

Lastly, the same trend is seen among those headmen who are of the same tribe as the chief, against those who are of other tribes (Table XIV). Here, however, the difference is so small 621 622

TABLE XIV

PROPORTION OF ADMINISTRATIVE HEADMEN AMONG ALL VILLAGE HEADMEN OF THE SAME TRIBE AS, OR DIFFERENT TRIBES FROM, THE CHIEF IN CHIKWEO, NGOKWE, CHAMBA AND MPOSA AREAS

Type of Headman	Same Tribe	Different Tribe	Total
Administrative	85	65	150
Non-Administrative	76	73	149
Total	161	138	299
% Administrative Headmen .	52·8	47·1	50·2

$n = 1$; $\chi^2 = 0{\cdot}95$; $p = 0{\cdot}3422$.

that it may easily have arisen by chance. These factors, however, do not operate independently. There are more co-tribesmen, co-religionists and relatives of the chief among the Invaders than among the other categories. In other words, the factors are all intercorrelated and it is possible to consider any particular factor as the independent variable. From the point of view of the people themselves, to be an Invader is to have one of the best claims on the chief to become an Administrative headman.

THE SIGNIFICANCE OF THE SCARLET HEADBAND

Government recognition therefore provides the means whereby headmen are ranked in two major categories. But Administrative village headmen themselves are ranked by a number of prestige-indicating characteristics. The most important of these are the right to wear a plain scarlet headband and the right to hold boys' and girls' initiation ceremonies. 622 554 292

Of these two additional marks of rank the more important is the right to wear the scarlet headband. This headband is wrapped round the head, turban fashion. Most village headmen wear a headband of some sort, either of white or coloured cloth,

2: Mitchell E-5 (1946-1949) 1956 FT7 Yao FT7

CHAPTER V

THE VILLAGE HEADMAN

Villages as Discrete Units

622
621

THE village headman is a key personality in Yao social structure. Viewed as an organization of villages, the social structure may be described in terms of the positioning of village headmen in relation to each other and to the chief. But the village headman is a representative of a corporate group, the village. The position he occupies in the structure as a whole, the rôle he plays in his interaction with other village headmen and the chief, and the prestige that he has in the community as a whole, are all derived from the village of which he is the representative, and in particular from the history of the dominant matrilineage of that village.

I am now considering, of course, all village headmen, however small their villages are, and not only the Administrative village headmen, as in the previous chapter. Each group which sets up a village recognizes one man as the 'owner' or warden of the village (*asyene musi*). The word '*musi*' (pl. *misi*) in Yao, refers primarily to the physical concentration of huts, but it is impossible for the people to separate in their minds the dwellings in a village from the people who inhabit them. In Yao, a deserted village is no longer 'a village'. It is called instead *lisame* (pl. *masame*),[1] a word which refers now not to the village as a unit, but to the collection of deserted and individual huts. The word *musi* or its diminutive form *kamusi* may be applied to a cluster of only four or five huts, or at the other extreme it may be applied to a large concentration of more than 500 huts.[2] The essential point is that the cluster of huts is occupied by a group of kinsmen who are independent of their neighbours. For example, a stranger may see a cluster of huts and ask, 'Whose village is that?' The reply may be, 'That is no village, they are only homesteads.'[3]

[1] From the verb *hsama*—to migrate.

[2] Large complex villages may also be called *msinda*.

[3] *Mañasa* (sing. *liñasa*), which I have translated as 'homesteads', strictly speaking refers to the households set up by married men.

2: Mitchell E-5 (1946-1949) 1956 FT7 Yao FT7

Further enquiries may reveal that this is only a section of a larger village, possibly a hundred or more yards away. 622

The boundaries of a village may not always be clear. Clusters of huts which are part of one village may be physically nearer another, but in the minds of the Yao, who see not only the huts but also the social relationships of the people occupying them, there is no confusion at all. As a general rule the villages are fairly compact and clearly demarcated from others, and even strangers have no difficulty in recognizing the autonomy of the group which is expressed in many different ways. MacDonald recorded that formerly a headman performed a certain amount of ritual which symbolized the unity of the village.[1] Much of this has fallen away, but the unity remains. 621

The ritual surrounding the foundation of a new village bears testimony to its persisting political significance. In this ritual the unity of the group, against other similar groups, including the village from which it has sprung, is expressed. On first arrival at a new village site the men build grass sheds, beginning with that of the headman. That night the headman pours a cone of sacred flour at the root of a tree on the site, and asks the spirits of his ancestors whether the site is propitious. Early next morning he examines the cone to see the answer. If a side of the cone has collapsed it does not augur well and another site is selected. If the cone is still whole it is taken that the spirits acquiesce, and permanent huts can be started. The headman then goes into the bush to find medicines[2] which he mixes with groundbeans. That night, with the medicated groundbeans in the hut, the headman has intercourse with his wife. In the morning those who are not sexually active come to the headman's grass shed to drink some water in which the medicine has been steeped and eat some of the medicated beans with a little porridge, which the headman's wife has prepared from the sacred flour. This medicine is called 'the medicine to strengthen the village' (*mtera wakulimbika musi*). Until then all members of the village should have been continent but after this sexual relationships may be resumed. The object of the medicine is to prevent those 622 621 787 622 621 751 834 372

[1] See pp. 31–2.

[2] *Nkulungutu* and *nkuta*, two plants commonly used for protection against *ndaka*. See f.n., p. 112. [824]

2: Mitchell E-5 (1946-1949) 1956 FT7 Yao FT7

who are sexually inactive from contracting *ndaka*.[1] At the same time the headman gives each household a piece of the fire which has been newly kindled in the traditional way by rubbing two sticks together.

The mystical danger inherent in the act of setting up a new village is well brought out in the propitiatory prayer and the abstinence from sexual intercourse. Once again it is the village headman who must make the offering to his ancestors; and it is the village headman who has intercourse with his wife so that the effluvium from his sexual activity may permeate the medicine in the hut and so protect the villagers from *ndaka*. Lastly, it is very important that the whole village cooks and is warmed by one fire. 'We are of one fire' expresses the common origin of two villages; though in fact every time a new village is founded a new fire should be kindled. To bring fire from the village of origin is to bring sorcery, since the Yao believe that sorcery can operate between persons closely linked by kinship only. To have one's own fire is to be autonomous from other groups.

The Burdens and Rewards of Headmanship

MacDonald had the perspicuity to see not only that the village headman was the representative of a corporate group and that he represented this group to outsiders, but also that he represented external authority to his villagers. The village headman who in his person stood for the unity of the group, performed certain ritual acts which emphasized this, such as praying to the village ancestors. In spite of the decline of the ritual his position is still regarded as exceptional. Much, however, depends on the rank of the village headman. There may not be much difference in ritual observances and mystical dangers between a headman who has in his charge a meagre three or four huts, and a commoner. In the larger and more important

[1] This is one of the most important mystical concepts of the Yao. I have described this condition and its implications more fully in *Marriage among the Machinga Yao of Southern Nyasaland* (R.-L.I. Paper), forthcoming. Briefly it is a disease characterized by œdema which affects those who are sexually inactive when they are suddenly brought into contact with a person, or an object which he has touched, after having intercourse. The people most affected are the young and the old, i.e. those who cannot have sexual intercourse. Those who are capable of intercourse are expected to have ritual intercourse with a stranger, and so fortify themselves against this dread disease.

2: Mitchell E-5 (1946-1949) 1956 FT7 Yao FT7

of sorcery, but the representative takes no part in the proceedings at all; he is outside them and is there merely to see that affairs are conducted fairly.

The Value Attached to the United Village

The third aspect, the dominant theme in all speeches, is the emphasis on the position of the headman as a leader of a corporate group, and his duty to maintain its unity. The chief and the officiating headmen warn the successor about the possibility of conflict in the village. They advise him to settle differences at once lest these should lead to a split in the village. They also warn him that his wife's relationships with her sisters-in-law, living as she is, virilocally,[1] are a danger point and may lead to trouble. The danger from the 'husbands' who are members of other villages and whose loyalties do not lie directly with the new headman is made manifest to him. At Nyenje's ceremony the officiating headman remonstrated with Nyenje's sisters because some had left the village without giving him an opportunity to settle their differences. The frequent references to the danger of sorcery are also references to the fear of the breakdown of the village. The villagers are exhorted to respect the headman and to be obedient to him for the general welfare of the group as a whole. Regularly the image of the tree and its branches is invoked, and it is made clear that the headman is dependent on his people for his rank and status, and they on him for their unity.

The disintegration of a village in Yao eyes is a sad affair and the disruptive forces in it must be very strong before a section leaves it. People who want to leave a village are usually remonstrated with and told not to 'break' it. In the frequent conflicts between the headmen and their younger brothers the arbitrators usually try their utmost to prevent a migration. They always award compensation to the injured party and tell the disputants to live in peace, and not to leave the village. Frequently, however, the leader of the dissident group prefers to refuse the compensation money, which is often as much as £6 or £7, and

[1] i.e. living with her husband's kin. I use 'virilocal' and 'uxorilocal' in preference to the older but ambiguous terms 'patrilocal' and 'matrilocal'. See Richards, 'Some Types of Family Structure amongst the Central Bantu', 208-9.

2: Mitchell E-5 (1946-1949) 1956 FT7 Yao FT7

strike out with his adherents to found a new village. A sum of £6 or £7 is a considerable amount in everyday Yao life where the annual cash income of the average individual is not much more. The leader of a dissident group is prepared to forgo this wealth to get one foot on to the lowest rung of the political ladder—that is by becoming a village headman.

Obversely there is a great deal of sentiment attached to the idea of a united village. To the Yao way of thinking a village is broken by fighting or death, and these evils are linked by witchcraft beliefs. The association of death and the break-up of the village is brought out clearly by the funeral ablutions of villagers after the burial of one of their number.[1] An important ingredient in the medicine with which the mourners wash themselves after the funeral, is *cikula*. It is the earth from a particular type of termitary which is usually about 12 to 18 inches high, upright and almost cylindrical. The crust is very brittle and it is comparatively easy to chip off a piece. When this is done a mass of internal chambers and passages is revealed. The soldier ants, unlike those of other species that retreat into the darkness of their passages as soon as they are exposed, come into the open daylight and swarm in confusion over the fractured termitary. When I questioned my informant about *cikula*, he kicked the crust off the top of one of the hills and said, 'See all the houses in the village of the ants? I have broken their village. So *it* is with death. It breaks the village.'

The Yao believe that death 'breaks the village' and that conflicts through sorcery lead to death. Therefore, conflicts are the real cause of village splits. Hence differences must be settled immediately if the village is to persist, because if they last too long one of the aggrieved parties is sure to start using sorcery against its opponents. Those who do move away, go to a distant place because they believe that sorcery operates only where there is social interaction. But the fear of sorcery on the other hand is just as strong a force in maintaining the physical unity of the village. It is while the migration is being planned that sorcery is most likely to be used. This is particularly so if the village break is taking the form of a lineage split. This happened, for example, in Lupunje village.

Kalambo, the sister's son of Lupunje, wanted to leave the village and had gone to seek a suitable site. When he returned he found that

2: Mitchell E-5 (1946-1949) 1956 FT7 Yao FT7

621 his mother was ill and had gone with Lupunje's younger brother to
626 the diviner to find out the cause of the illness. The diviner indicated
753 that Lupunje thought that Kalambo was not showing him the proper respect. Lupunje knew that his sisters had lost their value in the lineage since they had stopped bearing children, whereas Kalambo's sisters were still reproducing. His malice had caused the woman's illness. When Kalambo got home he asked his mother's brother to blow water out of his mouth [1] and help him to prepare some medicine for the sick woman. This Lupunje did and the woman recovered immediately.

Shortly afterwards Kalambo remonstrated with his mother's brother for causing the illness of his sister, but Lupunje said that he had no control over it: the spirits had brought it on her. Kalambo knew that he could do nothing and abandoned the idea of building his own village. He knew that there was bound to be more illness if he carried on with his plan.

182 Clearly the belief in the mystical powers of the ancestors or of
621 sorcery is a force which prevents sections from breaking away
626 from the village. A break follows only when opposition within the village has reached sufficient pitch to force one of the sections to take the risk of illness, rather than to continue living in the village. Sometimes the dissident group comes back because further deaths at their new village site convince them that their action was wrong.[2]

Effects of the Headman's Personality

622 Whether a village maintains its unity or not, depends very largely on the personality of the headman. This is why the officiating headmen and others at the installation ceremonies are so insistent that cases should be settled quickly. The main duty of a headman is to maintain harmonious relationships within his village and to see to the welfare of its members. All severe [718] illnesses are immediately reported to him, and so are the results of all divinations. He usually sends his representative to divina- [764] tions concerning kinsmen not related to him matrilineally. He is immediately notified of all deaths and he organizes the funeral rites. Squabbles are brought to him for arbitration and even
622 where squabbles are settled by kinsmen in the village, usually the
692 headman is formally told of them. Frequently marriage diffi-

[1] An act which means malice. See Chap. VI, p. 139.
[2] See the case history in Chap. VI, p. 133.

2: Mitchell E-5 (1946-1949) 1956 FT7 Yao FT7

a severe drought, and he claimed the rights over it. One day in 1930, some boys from Mapata village came down to the pool with fish-poison. At about noon some boys from Cikoja's village arrived with their traps. When they saw the Mapata boys using fish-poison they told them to desist and tried to take away the fish. This led to a fight in which knives were drawn. One of Cikoja's boys ran back to tell him, and in anger he came down to the pool with some adults. The Mapata boys now ran back to Masimbo who immediately assembled some men and came to the assistance of the Mapata boys. The two groups joined battle immediately and there were casualties on both sides. Mapata heard about this and came running down to separate them. 622 689 423 226

The next morning they took the dispute to Chiwalo. He started by asking why Mapata had used fish-poison in someone else's pool without permission. Mapata replied that he did not know that his boys had gone down there. He said that Masimbo had told him about the conflict and that he had gone down to stop it. He was not aware of it before. Chiwalo now turned to Masimbo and said, 'Masimbo, you are in the wrong. You have caused the children to suffer. You went to make war because of your children. The people of Mapata, they are in the wrong because they did not report to the owner of the pool.' 622 689 423

When Cikoja was asked if he had anything to say he only replied that he was ashamed of what had happened because he was the first in the area, and until then they had been friends. The conflict had arisen because the children had done something which they did not know was wrong.

Chiwalo ordered Masimbo to pay 5s. and Mapata 6s. to Cikoja. He then told Cikoja that he should brew some beer and share it with the other two villages so that friendship might be restored and the children might go from village to village without fear. The chief's instructions were carried out and normal amicable relationships were re-established.

The way in which the villages acted as corporate groups is well illustrated by this incident. The responsibility of the village headmen for the activity of their members also emerges. The chief found Masimbo in the wrong for causing the fight, but he also fined Mapata because his boys had used fish-poison. The fines were paid by the village headmen, Masimbo and Mapata, to the village headman Cikoja, for they are the representatives of the corporate groups under them. 622 689

In no other field of village relationships is the corporate 621 423

2: Mitchell E-5 (1946-1949) 1956 FT7 Yao FT7

621 423 identity of villages more clearly seen than in the arguments that arise over rights over waterholes. These are usually dug next to a stream or a marsh, or in some other place where the water will percolate into them. The physical labour of digging a waterhole establishes the rights to it, and a village retains these rights if at some time in the past any of its members had dug it.

601 423 685 622 In normal years, and of course during the rainy season, there is enough water for all and no friction arises, but in drought years difficulties arise. Friction between Nampeya and Cikuwita arose in this way in 1933.

During the dry season the waterholes that were normally used were drying up and the people of Nampeya decided to open up a disused one. When Cikuwita's people saw Nampeya's people using it they came to use it too. Nampeya's women saw this and told the other people they had no right to use the waterhole. Words passed between them and eventually there was a tussle between the two groups, during which a waterjar of one of Cikuwita's women was broken. Cikuwita's women said they would take the case up to Ntibwilibwi, a headman of local importance, and when they returned to their village they complained to their headman who took the complaint to Ntibwilibwi. He sent a message to Nampeya to arrange a date on which the dispute might be settled. On that day the members of the two villages gathered at Ntibwilibwi's hut. The dispute was settled amicably: the person who broke the waterjar was ordered to take a chicken and give it to the owner of the jar, and Cikuwita was told to gather his people the next day and make them dig a waterhole of their own.

The villagers in each of these situations had acted with regard to their fellows primarily as members of villages. They had seen themselves as members of corporate groups and had interacted as such. In the dispute in which the jar was broken, the individual responsibility was fixed and compensation awarded, but at the same time the village headman was instructed on behalf of his villagers to make a new well and thereby ensure peace in the future. In all these disputes, however, the headman had appeared as the responsible representative of his village.

2: Mitchell E-5 (1946-1949) 1956 FT7 Yao FT7

CHAPTER VI

THE LINEAGE FRAMEWORK OF VILLAGES

Matrilineal Kinship

TO outsiders a village appears to be an undifferentiated whole and in interaction with other villages it acts as such. But within the village, social actions are determined by membership of kinship groups whose genealogical relationships to each other differ from one village to another. The village headman who represents the unity of the village is usually a kinsman of all the villagers, but the links to him are different and diverse. Yet he commands the leadership of the village, not so much by his kinship to the villagers, for a villager may have other mother's brothers and fathers in the village, but by his position in a political structure, where he represents the village to outsiders and to external authority. 621 622 571

Yao social groups are organized on a principle of matrilineal descent but we shall see that, although this is the main principle, it is modified by the general political mould into which villages are forced. We have already seen that, at least in the lines of important headmen, clan-names are inherited from the mother.[1] This is the simplest and most direct way in which matrilineal descent affects social relationships. The principle of matrilineal descent is far more important in organizing the smallest group which acts corporately within the village—the matrilineage. 611

A significant feature of Yao social structure is that the village organization tends to cut across lineages. In the process of segmentation of matrilineages, which I shall discuss in detail later, new villages are formed. When this happens the dissident kin usually set up their homesteads a good distance from the original or parent village. The links between different sections of the same matrilineage, therefore, tend to become lost, and the new village, conscious of its own identity and unity, gradually loses its links with the parent village. The general structural relationship between the villages as wholes, and their headmen as their representatives, is fixed at the time when the division takes place, and this is remembered. But the actual genealogical 621 613

[1] See Chap. III, p. 71.

2: Mitchell E-5 (1946-1949) 1956 FT7 Yao FT7

621 links are usually forgotten, so that the two villages are known to
613 be related, but it is not certain how. The matrilineages to which the two headmen belong recognize this forgotten link and they refer to this relationship as *ulonga shakumbana*, which I can only translate as 'distant relationship'. In Cikoja village, for example, the headman's matrilineage, or as I shall call it, dominant matrilineage, is related to at least two other villages. These are Mbande and Cibwana Kawinga, both in Jalasi's area. The links with these two groups cannot be remembered. The first Mbande and the first Cikoja, I am told, had the same mother. Neither the present Cikoja nor any of his villagers could remember the genealogy earlier than the fourth Cikoja. A section of Mbande village, nevertheless, lives in Chiwalo's area near Cikoja and there is a fair amount of co-operation between the two villages to-day. Cibwana Kawinga is by the same explanation a 'mother's brother' of the present Cikoja; he is called in whenever there are serious disputes in Cikoja's village, and brings the force of a senior relative to bear on Cikoja.

621 People who are thus vaguely and distantly related may express
613 their kinship in many ways. For example, they say that they are
601 'the people of one founding ancestor or ancestress'. They may say that they are *acina Masumba*, 'the people of Masumba', or *acina Nkopo*, 'the people of Nkopo'. Masumba and Nkopo here may be either a woman from whom they are descended, or a man who was the leader of the group when they first moved into the area. Where a man is mentioned as the founder the term is used for the descendants of the man's sisters. But like most terms for social groups its meaning changes in different contexts. In another context, for example, *acina Cikoja* means simply the people of Cikoja village and has no reference to matrilineal descent at all.

Other terms are more specific. The word *mpago* may be used in the sense of one type or kind, as *pampago pamo*. An arbitrator at an intra-lineage dispute said, for example, 'You people who have a case are people of one kind [*shandu pampago*].' The word *cipago* may be used in much the same way. But even here the reference may be to the entire span of matrilineal relatives whose relationship is vague and uncertain (*shakumbana*); or it may refer to a section of relatives having one known ancestress; or it may even refer to a segment within the section.

2: Mitchell E-5 (1946-1949) 1956 FT7 Yao FT7

Among the relatives of the largest order of kinship (*cipapo*) there is a bond only slightly more intimate than that among people who have the same clan-name. There are none of the jural and moral obligations which characterize membership of a matrilineage which is a part of a village. The larger group, for which there is no exact Yao term, may be looked upon as a maximal lineage. It is characterized by a relationship of a more definite bond than that of having a common clan-name, but the members may still marry.

The Matrilineage

It is within the village that the matrilineage operates most clearly. The distant matrilineal link which connects villages such as Cikoja, Mbande and Cibwana Kawinga, is set in a context of inter-village relationships and is therefore part of the political system. Within the village the matrilineage becomes a corporately acting group of a different dimension. It is in this order of lineage within the village that we have the set of relationships described by Professor Fortes as applying to the inner lineage[1] among the Gold Coast Tallensi.

The depth of a matrilineage within a village is seldom more than five or six generations from the founding ancestress to the new-born children. The name of the founding ancestress is remembered and the descent of each member of the matrilineage can easily be recounted. The ancestress is known as the *likolo* or *lipata*, words which also refer to the trunk of a tree. We have seen how at a headman's installation ceremony the image of a tree was invoked in describing the lineage.[2] We find it once again here, where the founding ancestress is seen as the stem or root from which all members of the lineage have sprung, and the various sections of the matrilineage are seen as the branches (*nyambi*). This symbol of the lineage appears also during offerings to the ancestors. The chief, or headman, in

[1] See Fortes, M., *Dynamics of Clanship among the Tallensi*, Oxford University Press (London, 1945), and *The Web of Kinship among the Tallensi*, Oxford University Press (London, 1948). The Yao system of lineages is not the clearly segmented type of structure characteristic of the Tallensi. I hesitate, therefore, to use Fortes's terms, and use *matrilineage* for the localized unit which is usually a component of a village.

[2] See Chap. V, p. 119.

2: Mitchell E-5 (1946-1949) 1956 FT7 Yao FT7

621 making the oblation, pours the beer or sprinkles the flour at the
613 root (*lipata*) of a shrine-tree. As would be consistent with this
769 way of looking at the lineage, genealogically-distant ancestors are said to be 'below' (*pasi*), so that if a Yao wishes to say that a certain person was a matrilineal ancestor many generations back, he would say that he was 'very much below'.

The Concept of 'The Mother'

613 The matrilineal descendants of the founder look upon them-
562 selves as having been fed from the same breast and may express this by saying 'we are of one breast'.[1] Deep sentiment is
843 attached to the idea of the mother among the Yao. There is, for example, a sharp distinction drawn between those women who have had children and those who have not. When a woman becomes pregnant for the first time, she is given instruction in child welfare when she undergoes a special ceremony (*litiwo*). This is a ceremony which is publicly announced and attended by most of her matrilineal and other kinswomen and acquaintances. No woman may attend this ceremony if she has not herself had a baby. Thus her change in status in the community is clearly shown by the public recognition of her condition, and the fact that she is initiated into secrets which are shared by other mothers only. Her position in the lineage is much enhanced when she becomes a mother. It is the most important step towards becoming a village founder herself.

562 The concept of 'the mother', in general, also appears in the
601 boys' initiation ceremonies. Certain phases of ceremonies may be conducted only with the help of the women. They have to
881 clap the rhythm to which the 'tailmen'[2] do their dances. Here all women are classified as 'mothers' and without their co-operation the ceremonies could not be conducted. During the same ceremonies three women appear with baskets of food on their heads. The tailmen remove the baskets and sacralize the

[1] *Tuli peûvele pamo.* The word *mlango*, a doorway, is also commonly used. The idea in essence is exactly the same. It is the concept of the children who come to settle around a woman's hut door. It is used as *ûandu pamlango pao*, the people of his lineage section.

[2] The *m'mchira*. These are the functionaries in the initiation ceremonies. They carry medicated zebra tails during these ceremonies, and this gives them their names. See especially Stannus, 'The Wayao of Nyasaland', 229 ff.

2: Mitchell E-5 (1946-1949) 1956 FT7 Yao FT7

613 memory of the ancestors. These are called *sadaka*[1] and are
769 similar to those held at the end of the mourning period. They
are usually held when one of the lineage members has had a
178 dream about an ancestor. The senior members are told of this and interpret it to mean that a feast in his memory should be held. The women cook a meal of mush and relish and on an appointed day the members of the matrilineage who live within a reasonable distance gather at the village of the senior section and share the feast. During this feast Islamic texts are chanted in Arabic. It is clear that in this situation the context of the meeting is exactly the same as that of the old offerings made by the lineage leader at the shrine-tree. The common ancestor is recalled and the matrilineage by meeting reaffirms its solidarity.

The Localized Matrilineage

613 The matrilineage may itself be localized in the form of a
621 hamlet or small village, as in Ali Kasunka village. It has 9 huts situated about half a mile from Chiwalo's court house in Kawinga's area. The genealogy, hut plan and census are set out in Appendix B. I summarize the genealogy here to show how the hut owners in the village are related. The village is about 300 yards across and about a quarter of a mile from the main road.

Ali Kasunka (C6),[2] the warden of the village, formerly lived in a village known by his mother's brother's name Msilo (B1). Ali Kasunka is the son of the chieftain Mposa in Kawinga's area. The village of Msilo still exists in Mposa area. Ali Kasunka and his sisters moved out of Msilo village and established a hamlet in Malemia's area near Zomba township. While they were there Ali Kasunka went to work as a domestic servant in Zomba. One day the sister of the cook in the household in which he was
[595] working came down to visit her brother. She became Ali Kasunka's second wife (he was already married to a woman from Malemia area) and lived with him in Zomba. She was the daughter of the present chief Chiwalo, and was living at her

[1] Sanderson says that this is derived from the Arabic word *sadaqa* which means 'alms'. Sanderson, M., on 'Ceremonial Purification among the Wayao, Nyasaland', *Man*, xxii, 55 (June 1922), 91–3.

[2] The reference number is to assist the reader to identify the person on the genealogy in Appendix B.

2: Mitchell E-5 (1946-1949) 1956 FT7 Yao FT7

village of birth in Chiwalo's before going to Zomba. After six years, when the land round Ali Kasunka's village in Malemia's had become exhausted, he decided to move the hamlet to Chiwalo's and selected a site about a mile from the hut of his second wife. This is where the village has been since 1940.

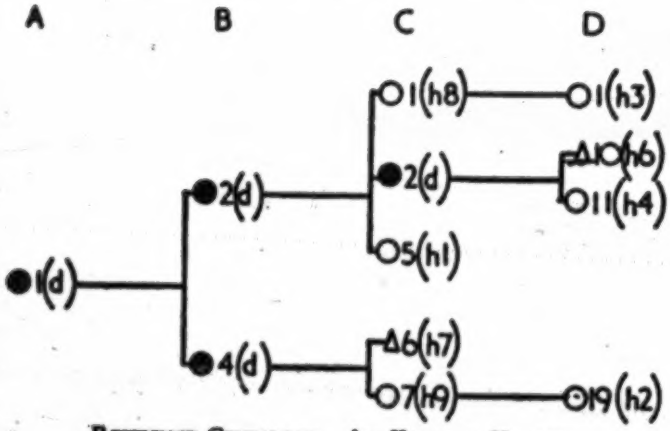

Reference Genealogy. Ali Kasunka Village.

Considering the matrilineage in detail: although Ali Kasunka's mother's mother is known, her collaterals are not, and Ali Kasunka's mother's mother's only sibling was her brother Kasembe. This genealogy is, therefore, built up from Ali Kasunka's mother's mother (A1). She had three daughters. One (B6) died before she had any children. Nyangu (B2), one of her other daughters, has two surviving daughters, Mbalasyao (C1) and Biti Kasembe (C5). Nyangu's other daughters, Amaliama (C2), Amwikonde (C3), and Amasingati (C4), all died when the village was at its present site. Amasingati died before she had any children.

Mbalasyao's (C1) daughter, Biti Mtuwa (D1), is in the village. Nalolape (D2) accompanied her husband to Cholo, where he went to work in 1947. Yahaya (D3), Ajida (D4), and Atwabi (D5) have all married uxorilocally. Taimu (D6) is unmarried and is away working for an Indian transport driver in Zomba, and Idi (D7) is working for a local Indian storekeeper as a domestic servant. Loni (D8), a girl of about 8 years, sleeps in her mother's hut.

2: Mitchell E-5 (1946-1949) 1956 FT7 Yao FT7

613 621 Amaliama (C2) had five children before she died. The eldest Golosi (D9) is dead but he had married out before he died. The second, Mwanace (D10) has married virilocally and occupies hut 6. He has no children. Nyangu II (D11) has taken the name of her mother's mother (B2). She has gone to her husband's village with her five children, because he succeeded to a village headmanship in Mposa's area. Alieje (D12) is in the village and has three children, Kasonga (E9), Undeje (E10), and Amale (E11). All of them have not yet reached puberty and they sleep in their mother's hut.

Before she died Amwikonde (C3) had only one son, Mboga (D14), who is now about 5 years old and is cared for by his mother's elder sister, Mbalasyao (C1), in whose hut he sleeps.

Amasingati (C4) died before she had children.

Biti Kasembe (C5) is still living in the village (hut 1). She had only one daughter, Biti Sale (D15), who is in the village and who in turn had two sons, Taibu (E12), who died in infancy, and Rajabu (E13), who is an infant.

The other main section of the hamlet is made up of the descendants of Nyangu's sister Abeda (B4), who had six children. Ali Kasunka (C6), who is the warden of the village, is married uxorilocally about half a mile away at the village of his second wife. His first wife who was living virilocally has recently gone back to her village in Zomba to look after the children of her late elder sister. Ali Kasunka does not expect her to return. He had three children by her. They were Biliate (D16), who is married out, and two children who died in infancy. His children by his second wife live with her in her village. Ali Kasunka's sister Atawile (C7) had in all fourteen children of whom only Biti Mtemula (D19) survived infancy. She is living in the village (hut 2) and has had two children of whom only Wilson (E14), now aged 7, has survived.

Ali Kasunka's other surviving sister, Asausyeje (C8), with her 7-year-old child Mboga (D33), has gone to Zomba with her husband who is working there. Twalieje (C9) died before the village moved into this area and before she had children. Twalilemwapi (C10) also died before she had children. Andondonyeje (C11) died while living virilocally and her two sons married near her husband's village and have never lived in Ali Kasunka's village.

2: Mitchell E-5 (1946-1949) 1956 FT7 Yao FT7

Table XXV sets out the disposition of the adult survivors of this matrilineage. 613 621

TABLE XXV

RELATIONSHIP OF ADULT SURVIVORS: ALI KASUNKA VILLAGE

Relationship to Founder	In Village	Married out	Labour Migrants	Total
D	—	—	—	—
S	—	—	—	—
DD	3	—	1	4
DS	1	—	—	1
DDD	4	1	1	6
DDS	1	4	2	7
Females	7	1	2	10
Males	2	4	2	8

In this hamlet Ali Kasunka is both village headman and the senior male member of the matrilineage. He brought the village into Chiwalo's area and he had the responsibility for the welfare of its members. He has to arbitrate in the disputes that arise within the village and he must at least appear at arbitrations where the members of his village have come into conflict with outsiders. 613 621 622

THE CONFLICT OF MALE AUTHORITY AND UXORILOCALITY

Although descent is matrilineal, authority still rests with the men. The senior man by generation and age is the leader of the matrilineage. It is true that there are a number of small hamlets under women. Biti Nkula village is one, Biti Cimeta is another. But even for these villages there is usually a man who can be called in to handle the affairs of the village. He may be a classificatory brother of the village headwoman, or he may be her own son if he is old enough. For example, in Biti Nkula's village, it is her own son Adam who goes to the divinations and finds the necessary medicine when people fall ill. He also attends the court cases involving a member of the village. Adam is married to a woman in Ndiwagani's village about three-quarters of a mile away from his home and he is therefore easily 562 591 613

2: Mitchell E-5 (1946-1949) 1956 FT7 Yao FT7

562 available when needed. When he became a labour migrant in
591 1945, his younger uterine brother Lipepeje took over the responsi-
613 bilities. He is married in Ali Kasunka's village, which is about a mile from Biti Nkula's. In Biti Cimeta's village the minor disputes are settled by the headwoman herself. Her younger sister's son is married in a village ten miles away, and he would take over the duties if he could. He is married to his sister's husband's sister, and his sister's husband has threatened if he should try to take his wife home he will in turn take his wife to his home. Rather than stand the loss of a member from his matrilineal village he prefers to remain married uxorilocally. When more serious disputes occur he comes to Biti Cimeta's to settle them.

The principle of uxorilocal marriage is thus in conflict with the principle of male leadership of the lineage. If a man is living too far away he cannot attend to his numerous duties. The conflict can be solved in one of three ways. The first is that the man may marry in a village which is close at hand, and most marriages do take place between people who live near each other.[1] Second, he may marry a cross-cousin who is living in the village, albeit in another section of it. He need not then move out. Third, he may bring his wife into his village. The last two alternatives are from his point of view the best. He is then living with his matrilineal relatives, and among the group in which he has clearly defined rights and unequivocal status. But his wife's brothers will resist his attempts to take his wife from her village, especially if she is still capable of bearing children. He has to persuade her brothers to let her go with him and if they refuse, or if the woman herself refuses to go, he is helpless. Is he wishes to live virilocally now his only course is to divorce the woman and marry a woman who will live virilocally with him. If he does bring his wife to his village she is kept there by only loose ties of marriage, and on the slightest pretext her male relatives will take her back to her village or she herself will run away home.

562 The larger the group of relatives to be looked after, the more
591 urgent is the need for the senior matrilineal male to live with his
613 lineage. All the villages headed by females are small. Table

[1] 75 per cent of marriages are contracted by people who live within 10 miles
621 of each other. See *Marriage among the Machinga Yao.*

2: Mitchell E-5 (1946-1949) 1956 FT7 Yao FT7

XXVI sets out the position of a casual sample of 36 villages in Chiwalo and Nyambi areas. Among the 23 villages which had

TABLE XXVI

SIZE OF VILLAGES UNDER HEADWOMEN AND HEADMEN

Type of Village	Under 10 Huts	Over 10 Huts	Total
No matrilineage male resident .	13	2	15
Matrilineage male resident . .	10	11	21
Total	23	13	36

less than 10 huts each, 13 or 56·6 per cent had no male matrilineage members living in them. Among the 13 villages which had more than 10 huts, only two or 15·4 per cent had no matrilineage male members living in them.[1] The largest village in which there was no matrilineal male had only 11 huts. When the size of the village increases, the senior male matrilineage member tends to move in to live with his wards.

THE SORORITY-GROUP (*mbumba*)

But as the village grows and the duties of a senior matrilineage male become more onerous, a form of organization appears within the lineage which lessens his burden. This takes the form of the differentiation of sibling groups, and is part of the normal process of segmentation which is inherent in any lineage system. Consistent with the Yao idea that men should take care of the affairs of the lineage, sisters look to their eldest brother when they are in trouble. This group of sisters in the care of their brother is called *mbumba*. In the plural *acambumba* the word refers to women in general, but in the singular it refers to a particular group of women in the way I have explained. The word is always used in the sense of 'so-and-so's *mbumba*', as *mbumba ja CeMayele*. The central concept here is the brother-sister link and I have accordingly translated the word *mbumba* as sorority-group.

The man who is in charge of the women, usually their eldest

[1] Diff. of per cent = 41·1 ; S.E. of diff. = 17·1 ; C.R. = 2·4 ; p = 0·0164.

2: Mitchell E-5 (1946-1949) 1956 FT7 Yao FT7

593 one brother is unsuitable, they turn to another, uterine or collateral, and only if he too is unsuitable do they then turn to other relatives.

The attitude of Naliwa shows very clearly, too, the dependence of the women on the man. They have to wait for his action before they can settle their difficulties. This is part of the general process of internal differentiation within the lineage. The women become organized into small groups, each under the care of a man. These are siblings, so that their common descent, well expressed by the Yao *mucitumbo cimo*, 'in one womb', is the real unifying bond between them. When a Yao wants to express his close link with his uterine sister, that is to emphasize that she is not a collateral or classificatory sister, he stresses that they are from 'only one womb' (*citumbo cimpepe*). Naliwa says that a man who controls his sorority-group so that they live happily together is a happy man. He is happy also because his prestige is enhanced if he is a warden of a sorority-group. Being a warden is the first step on the ladder which leads eventually to independent village headmanship, and the man who has a large sorority-group under him can achieve this aim more easily. Therefore, the warden of a large sorority-group has even higher prestige than a man who has only a few sisters to look after. But the aphorism that 'chieftainship is slavery'[1] achieves significance when a man acquires more dependants.

Segmentation and Fission in the Matrilineage

613 The sorority-group organization in the matrilineage assumes
621 most significance when viewed in its political setting. Segmentation and differentiation within the matrilineage consistently leads to splits, hence to village break-ups and the birth of new villages. Fission in the matrilineage usually appears when the wardens of the younger sorority-groups are over the age of 30. At that age each man is adult and therefore old enough to be responsible for his own and his sorority-group's actions and, usually, his mother's brothers, who when alive had kept their younger relatives united, are dead.

The events leading up to a split in a matrilineage usually follow

[1] From Smith and Dale, *The Ila-speaking Peoples of Northern Rhodesia*, Macmillan (London, 1920). For its significance, see Gluckman, Barnes and Mitchell, 'The Village Headman in British Central Africa', *Africa*, xix, 3.

2: Mitchell E-5 (1946-1949) 1956 FT7 Yao FT7

The events leading up to a split in a matrilineage usually follow a definite pattern. Very frequently indeed an accusation of sorcery is involved.[1] This usually stimulates a dissatisfied warden to gather his dependants together and to move off to found a new village. Elsewhere I have set out in detail the typical events which precede a village break-up when the lineage splits after a man quarrels with his mother's younger sister's sons.[2] These splits are not always successful because the seniority of the older relative, especially if he is a headman of some standing, may serve to reunite the village, and the leader of the dissident group may be unable to maintain its independence. This is what happened in Mwambajila village.

613 578 621

Mwambajila is one of the more important village headmen in Jalasi's area. The tension between him and his mother's younger sister's son Mbwana Somu reached a climax after a series of deaths among Mbwana Somu's children. He consulted a diviner and found that Mwambajila was the sorcerer causing these deaths. Mbwana Somu was very angry at this and told his sisters that they ought to leave the village and go to live in Liwonde's area, i.e. about 15 miles away. Eventually he persuaded them to move and they went to live on the Masanje river banks. But the deaths continued. The women now started to be worried because they had left Mwambajila's village

---

[1] The implication of this cannot be understood without some knowledge of Yao divining procedure. The type of divining is usually by gourd and object (*ndumba*). The diviner first of all establishes the reason for the visit, i.e. death, illness, theft, or whatever it is. He then consults his gourd and throws into his hand a variety of symbolic objects. He builds a story round these objects, and finally pronounces that he sees some person whom he vaguely defines. The consultor is then asked to mention who this could be. Though sorcery is supposed to be practised mainly in order to get human flesh for ghoulish feasts, it is not believed to act haphazard. In other words, a sorcerer is supposed to select his victims for revenge as well as for meat. The selective processes at work, therefore, when the consultor seeks to reconcile the diviner's findings with his own suspicions, are that he should select someone who is obviously evil, i.e. from his point of view, one with whom he has been quarrelling, and he should appraise the possible motivation for sorcery. After he has made the selection the name is tested by the diviner and the consultor may later submit a chicken to the poison ordeal to test the diviner's findings.

[787 754]

This, of course, confirms Evans-Pritchard's analysis of Azande witchcraft and I here acknowledge my debt to him for stimulus both from his book and from the discussions we have had on the topic. I assume his analysis in my discussion. See Evans-Pritchard, E. E., *Witchcraft, Oracles and Magic among the Azande*, Clarendon Press (Oxford, 1937).

[2] In *Seven Tribes*. Case History II, 321.

2: Mitchell E-5 (1946-1949) 1956 FT7 Yao FT7

613 as he was supposed to be the sorcerer. Suspicion fell on Mbwana
578 Somu and eventually one of his sisters went back to Mwambajila and
621 complained to him. Later the sisters consulted a diviner and found, as they suspected, that Mbwana Somu was the sorcerer. Thereupon, they returned to Mwambajila and left Mbwana Somu living alone with his wife.

Here is an example of a village which did not manage to maintain its identity but returned to be re-integrated into its village of origin.

578 Conflicts between collateral brothers are not frequent. This
593 is for two reasons. Firstly, the opposition between lineage
621 segments is usually expressed in a conflict between a man and his mother's brother, a fact which is no doubt related to the opposition of proximate generations. Secondly, lineages seldom persist long enough to contain within them several segments in which collateral brothers are leaders.

Conflicts seem to occur more frequently among uterine brothers, a fact which is significant in the light of the particularly strong bonds which unite them. The relationship between uterine brothers is much the same as that between sisters.[1] They are intimately linked by their bond of kinship and depend on one another for care and support. Usually the elder brother has his younger brothers in his care, in the same way that he has his sisters.

But at the same time they compete for the control of the sorority-group. A man, we have seen, can seek prestige in the indigenous political system only by becoming a village headman. He can become a village headman only by mustering his sisters and setting up a small hamlet with them. The elder brother prevents his younger brothers from doing this because the sorority-group is usually under his care. The younger brother can gain control only if he can persuade his sisters that the elder is a sorcerer, or incapable, or in some way unsuitable for his position. Hence the frequent accusations of sorcery among brothers: it is a rationalization of a hostility arising from the structural position of uterine brothers, which, in view of the commonly accepted strong sentiments uniting brothers, may not be otherwise expressed.

The break-up of Mponda's village in 1940 clearly illustrates

[1] I have dealt with this more fully in my essay in *Seven Tribes*.

2: Mitchell E-5 (1946-1949) 1956 FT7 Yao FT7

how the opposition of brothers emerges in a situation where the lineage is concerned. 578 593 621

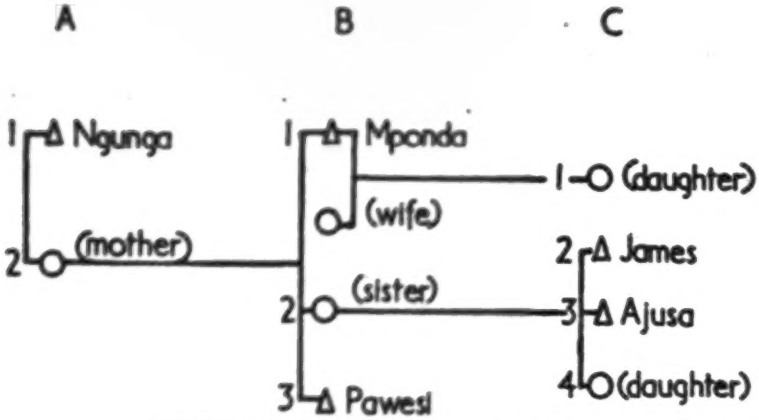

REFERENCE GENEALOGY. MPONDA VILLAGE.

Mponda, a village headman, was married virilocally. One day his daughter went to the pounding point in the village and found that her cross-cousin, the daughter of the headman's sister, was there. A quarrel arose between the two girls over the pounding mortar. Presently they started to fight. The wife of Mponda then came out and caught hold of her husband's sister's daughter and beat her. Mponda's sister had gone to draw water and was just returning. She heard her daughter crying out and ran to the place to find her sister-in-law beating her. The two women had a quarrel about this and separated with bad feelings. The next morning the quarrel broke out again. In the altercation that morning the headman's sister rebuked the headman's wife for behaving in a way which did not befit her position. The headman's wife on the other hand threatened to leave the village if this went on. The bickering continued for some time and eventually the two women came to blows. The headman's sister, who got the worst of this encounter, now decided to take the matter up to the headman. When she told him about it he refused to listen to her complaint. He told her that he had brought his wife to the village and that he did not want to have her treated like a slave. Another sister now chimed in and said that Mponda ought to invite his younger brother along to help him to settle the case. Another recommended their leaving him altogether because he was telling his wife to despise his sisters. To this Mponda replied that the village was his and that his sisters were only children

2: Mitchell E-5 (1946-1949) 1956 FT7 Yao FT7

578 and that he could not understand who could be inducing them to
593 talk like this. He told them also that as far as he was concerned they
621 could report the case to whomsoever they wished. The women came out of the hut and went straight to Pawesi who was the headman's younger brother. He told them to go back and to wait a while before they took further action.

578 After four days had passed the headman's sister who had fought
593 with the headman's wife, became ill. In the morning the sisters sent
754 a message to Mponda but he did not come. They sent another
787 message to Pawesi who came and asked if they had told Mponda. They said that they had, but he had refused to come. Pawesi called James and Ajusa, the sister's sons of the headman, and told them that he would tell the headman that they were going to find out the cause of the illness. This they did. The diviner indicated that the headman had caused the illness by sorcery, because of the fight between his wife and sisters. Pawesi tested the divination by giving a chicken some poison. It died, indicating that the divination was accurate. He took the chicken's head to Ngunga who was Mponda's perpetual mother's brother.

When Ngunga heard this he refused to believe it. However, he agreed to send for Mponda and to ask him about it. When he did so Mponda denied the accusation. Ngunga now produced the chicken's head and accused Mponda of being a liar. At that moment a child came to tell them that the woman was dead and the interview ended. They went to the funeral and the next morning they decided to have a post-mortem meeting (*mapeto*) in order to decide the cause of the death. Mitomoni, one of Nyambi's perpetual sons, represented the chief. Ngunga opened the discussion by telling the meeting that the woman had been killed by the headman because of the fight between his sisters and wife. Mitomoni asked how they knew this and Ngunga told of the divination and the poison ordeal. He then asked Mponda if he had heard what had been said and what he had to say. Mponda replied that he knew nothing of it. Ngunga said that Mponda was a bad man and that the others would leave him and he would have to live alone. Mitomoni told Pawesi and Ngunga that they must not leave the village. Ngunga replied that it was impossible to stay there while Mponda was so bad. If the women stayed with him he would finish them all. Pawesi collected 30 of the 40 huts that made up the village and took them away to Chikweo's area, a distance of about 15 miles. Those who stayed behind with Mponda were his 'children' and some unrelated people.

593 This case brings to the fore the position of the younger brother
578 as a constant challenge to his elder for the care of his sisters.

2: Mitchell E-5 (1946-1949) 1956 FT7 Yao FT7

593 sisters are the points of cleavage in the matrilineage and the
611 group of uterine sisters is seldom divided, unless their daughters are old enough to form a corporate group and to move off with their mother to found a new village under their brother.

The Spatial Representation of Lineage Segmentation

361 The segmentation of the matrilineage is also shown in the
613 spatial distribution of the huts in a village. The daughters of
621 the women of the matrilineage set up their huts near to their mothers', and as this continues over a number of years, the internal segmentation of the matrilineage is automatically reflected in the disposition of huts. Most Yao villages will show this spatial representation of social distance, some more clearly than others. The clearest example I have is in Meni section of Majaja village, Nyambi's area. The disposition of the huts is set out in the village plan in Appendix C. Here are five fairly distinct groups of huts in the village. Four are descendants of four uterine sisters, the children of the previous Majaja. The space between these four groups is cleared and paths reticulate among the huts. About 200 yards away, the fifth group is out of sight of the others and must be reached by a path leading through the fields. In this cluster of huts live the children of the uterine brother of the four sisters. The matrilineal relatives of Majaja live about half a mile away in a quite distinct cluster.

In Cikoja village the same principles are at work but the situation is somewhat obscured by the number of patrilaterally-linked relatives. A glance at the village plan in Appendix D shows that the major segments, denoted by the symbols Ma and Mc in the plan, are quite distinct in the old village site, the huts of Ma being separated from those of Mc by a broad path and by a patch of bamboos. In the new village site across the stream the same general segmentation is shown where the two sections, Ma_1 and Ma_2, are separated by a path.[1] The separation of the clusters of huts is difficult to represent on a diagram because not only are the huts placed in discrete clusters, but they face in towards one another and the space between them is kept clean. Between the clusters there may be rubbish heaps and small garden patches. I describe later how the village continually

[1] I describe how this section of the village came to be across the river on p. 169.

2: Mitchell E-5 (1946-1949) 1956 FT7 Yao FT7

adjusts itself to the changes in its composition. At this point I wish only to indicate how the differentiation among the various segments of a matrilineage is reflected in the way the members site their huts in a village.

The Segmentary Process

The segmentary tendencies within the lineage are countered by unifying forces, but the cleavages between the lineage sections show up at the slightest provocation. Once the cleavage starts it widens rapidly and charges of sorcery become more and more frequent between the two sections until eventually one moves out to found a new village. A cleavage of this type has been developing in Cikoja village for the last eight years. When I left the field in 1949, talk of migration was in the air but it had not yet happened. I summarize the major events which led to the present situation.

The cleavage first manifested itself in 1942 when Bt. Mbwana (F2)[1] fought with her mother's younger 'sister' Ayesi (E8). These two were pounding at the same place in the village and Bt. Mbwana took Ayesi's flat sifting basket. She retained it for about four days without telling Ayesi that she had it. One day Ayesi saw it at the pounding point and asked Bt. Mbwana where she got it. They had a few words about it and Bt. Mbwana returned it and thought no more of it. She was pregnant at the time and was confined about a month later. It was her fifth child but she had a greatly prolonged labour. After labour had been going on for some hours, Cilimba (F1), her eldest brother, thought that there must be something wrong and sent his two younger brothers, Kausi (F3) and Gwili (F4) to a diviner. The diviner indicated that the cause of the difficult birth was that her 'younger mother' Ayesi was bearing her malice,[2] and advised that Ayesi should blow water from her mouth and declare that she bore no malice. Kausi and Gwili returned and went to Bt. Amina (E4) who was Ayesi's elder sister and told her what the diviner had said. Bt. Amina did as she was advised and fetched Ayesi to the door of the hut in which Bt. Mbwana was lying, and made her confess. The child was born immediately. After a week Cilimba and Kausi brought a complaint to the village headman Cikoja (E7). They accused Ayesi of trying to kill their sister. Cikoja sent a message to

[1] The reference numbers refer to the genealogy in Appendix D.

[2] Difficult labour is usually assumed to be due to adultery, but it may also be due to sorcery or malice. See p. 138, and Chap. VII, p. 183.

2: Mitchell E-5 (1946-1949) 1956 FT7 Yao FT7

him. The woman in the meantime had run to Chiwalo's but half a mile away. Here she complained to the chief that Mwanace wanted to kill her. Chiwalo refused to listen to her complaint and sent for Ali Kasunka. When he had come and explained the sequence of events, he continued saying that he would like to take the case to court. Chiwalo, who was Ali Kasunka's wife's father's sister's son (hence a classificatory younger brother) and whose henchman Ali Kasunka was, refused to arbitrate in the case but referred it to Kawinga. On the day of the case the woman's husband came back from the Army. The case was tried and eventually the court assessors awarded a damages claim of £1 to be paid by Mwanace to his sister. The husband, at the same time, said that he could not remain married to her because whenever he saw her he would think that she had slept with her brother and in court he gave Ali Kasunka a marriage termination payment. The tension between Ali Kasunka and his 'sister's son' did not end there however. When they got back to the village Ali Kasunka remonstrated with Mwanace saying, 'Are you not ashamed to have married your sister?' Mwanace said that he could not stand that sort of thing and went back to live uxorilocally.

A crucial point in this case history is that the women did not like Mwanace. Almost certainly there would have been a split in the village had the women had more confidence in Mwanace. The tension between Ali Kasunka and Mwanace, although the conflict is inter-generational, started, as it consistently does, from the relationships of a man to the women of his matrilineage. Without the support of the women, younger brothers or sister's sons are impotent against the power of their senior relatives. It is only when they can induce the women to follow them and to leave their rivals that they can found a new village and thereby begin to earn prestige. Therefore, although the men are the active agents in bringing about a physical act of fission, they are in fact only making manifest a situation which is latent within the lineage.

The position of the senior male matrilineal relative is of fundamental importance in questions involving segmentation. His position is seen most clearly in the dominant matrilineage, in which the name of the village is inherited. The Yao practise 'positional succession'. A man not only succeeds to his mother's brother's name but also to the position of the mother's brother in the social structure as a whole.[1] It follows that when the

[1] See Chap. V, p. 121.

2: Mitchell E-5 (1946-1949) 1956 FT7 Yao FT7

613 621 successor takes over the name of his predecessor, he assumes the position in the structure of the village as a whole, which was occupied by the first of that name. For example, when Cikoja VI succeeded to the name he moved to the position of Cikoja IV (who founded the village), as far as the members of the village were concerned. He is therefore the senior male matrilineal kinsman in the dominant lineage in the village, and Salimu, in spite of being more senior by generation, must call him mother's brother. The man who succeeds to the name of the founder of a village, or to the name of any important matrilineage member, therefore represents its maximum span to the members. From one point of view he is founding ancestor of the dominant lineage and is, therefore, lifted above the conflicts of the component sections; but from another, since he represents all other sections to any one segment, he is involved in all the conflicts. Cikoja, for example, is the senior marriage surety to all the members of the dominant matrilineage in his village, while the junior marriage sureties are drawn from the component lineage segments. In this way he unites the dominant lineage in that all difficulties are brought to him by the junior sureties. But the junior sureties accuse Cikoja of being a sorcerer when they see him as a representative of an opposed section. Whatever the degree of segmentation within a matrilineage, he is still a mother's brother to them all, and all the component segments are united through him. This is a concept aptly figured in the synonym for a senior matrilineage member, a village headman, or a chief *cikunje* — a bundle of grass; that is, a person in whom many different members are bound into one.

CHAPTER VII

THE PATRILATERALLY-LINKED GROUPS

The Position of the Husband and Father

MATRILINEAL descent provides the principle on which the smallest of villages, the hamlets, are organized. But not all villages are made up of huts owned by members of one matrilineage as in Ali Kasumka's village.[1] Most villages in fact have a more complex internal organization which may be epitomized as a dominant matrilineage which carries the village headmanship, and a number of subsidiary lineages linked to the dominant lineage by various means. The most common of these is the patrilateral link whereby the subsidiary lineage is connected to the dominant lineage through one of its men.[2] The subsidiary lineage develops in the village from the matrilineal descendants of the virilocally-married wife of one of the men of the dominant lineage, so that the subsidiary lineage, initially at least, are the 'children' of one of the men of the headman's matrilineage. Their peculiar position in the village must be seen in the light of the general position of the father in Yao society.

The father, obviously enough, is also a son-in-law; obvious as this may seem in English it is charged with meaning for the Yao. When parents-in-law refer to their daughters' husbands they use the term *akwegwe*; and they in turn are called this by their sons-in-law. But the *akwawini* are essentially men who are living uxorilocally and *akwawini* is the general status of being a man in uxorilocal marriage. *Mkwawini* thus cannot be translated into English without periphrasis and I translate it merely as 'husband'. I emphasize, however, that whenever I speak of *husbands* or the *husband* in general I mean 'husbands in uxorilocal marriage'. The Yao assume that marriages as a rule are uxorilocal. Usually the young husband builds a house in his wife's village and is expected to live there for the rest of his life. But

[1] See Chap. VI, pp. 140-3.

[2] I have called this type of village structure the 'chop' in my earlier essay, 'The Yao of Southern Nyasaland', *Seven Tribes*, 132 ff.

2: Mitchell E-5 (1946-1949) 1956 FT7 Yao FT7

613 he cannot escape the fact that in his wife's village he is only
593 a 'billy goat' and that his 'true home' is in his matrilineal
606 village. The pull of the matrilineal village on him, therefore,
591 is always very strong and he is constantly trying to return there.
621 His wife's responsible relatives are constantly trying to avoid this because they know that in time they are likely to lose the children who will probably settle in their father's village if they grow up there. In general, therefore, a husband must have a very good reason before he can get his wife's kinsmen's permission to take her and her children to his village. His wife's relatives do not easily yield. But a headman must live in his own village so that nearly all headmen bring at least one of their wives into their villages. Other men sometimes succeed in doing so especially if their wives are past child-bearing, but it is typically the headman's wife who lives virilocally.

621 The husband's interest in returning to his matrilineal village
591 is heightened by the fact that a man in his wife's village is looked
594 upon as the typical man without prestige: a stranger, whose duty is largely procreative. The theme song at the installation ceremony where the husband was compared with a billy goat, and the common epithet 'chicken rooster' for a husband, reflect the attitude of the Yao towards him. In the song I quoted, the husband was said to be unable to climb high in his village of marriage, however rich he may become.[1] He is, nevertheless, an essential member of the village and the Yao say that it can succeed neither economically nor physically without his aid.

A husband becomes more important when he stays in a village for a long time. He becomes known intimately to the villagers and is conversant with their affairs. He is, therefore, able to advise on many private intra-lineage and intra-village affairs and may even become a marriage surety if there is no more suitable person available. Also in time the husband's position in the village changes. As his children grow up and become active members in the matrilineage, his position of husband becomes supplanted by his position of father, which, in a matrilineal society like that of the Yao, is significant in the same way as that of the mother's brother is in patrilineal societies.

593 The Yao recognize the close bond between father and child.
90 This bond is conceived to be both social and physical and is

[1] See Chap. V, p. 119.

2: Mitchell E-5 (1946-1949) 1956 FT7 Yao FT7

 582

of patrilateral kinsmen, so that these bonds are personal and 586
distinctive for each member. 613

The Development of the Corporate Identity of Patrilaterally-linked Groups

The parent-child relationship is reflected in the structural 591
relationships of a patrilateral group to the dominant matrilineage. 593
Children are less strongly tied to their father than to their matrilineal kinsmen. Usually when a woman dies or is divorced while living virilocally, her children return to her matrilineal village. If the children are too young to express their own wishes, their mother's brother comes for them and they are formally returned to their village of origin. Occasionally children who have grown up in their father's village, especially if they have married their cross-cousins there, refuse to move back to their matrilineal village. They prefer to remain in their father's matrilineal village where they know people more intimately. In time, as they grow older, the women have daughters who may marry uxorilocally and thus a section of a foreign matrilineage begins to develop in the village.

The village as a social unit is more closely intergrated when 593
the children who are living there with their father are still young. 613
They do not yet form a corporate group within the village. 621
Their affairs are supposed to be controlled by their mother's brother, but in fact the headman, who is usually their father or a paternal kinsman, may settle many of their minor difficulties and find medicine for lesser illnesses, without bothering their mother's brother. When the children become adults and begin to assert their own wills the position in the village becomes more unstable. As the daughters grow up and marry, their brothers become their junior marriage sureties. If the mother's brother lives far away, the father of the children may be the senior marriage surety. He still has a personal attachment to his children, but his sons' relationships with him may now become affected by structural elements as they tend to interact, with him and others, in certain situations as representatives of corporate groups. As the village develops a son takes over the position of senior marriage surety to the headman's wife's descendants and he becomes the senior male lineage member, while his sisters' sons begin to take over responsibilities for their sorority-groups.

2: Mitchell E-5 (1946-1949) 1956 FT7 Yao FT7

593 613 621 The headman and father is now no longer directly concerned in the affairs of the linked lineage, and may only appear in their affairs formally as an adviser or an arbitrator in disputes. For example, he is advised of deaths in the village and of the disputes that have arisen and been settled. But this is part of his relationship to the linked lineage because of his headmanship. A fairly long-established village, therefore, contains two, three or four related lineages with complete autonomy in internal affairs yet together forming one community—one village under the leadership of the headman. As the village persists in time and successive village headmen and other men of the dominant matrilineage bring their wives into the village, related lineage segments develop from them, and the internal structure of the village becomes more and more complex.

613 621 An example of a village of this kind is Cikoja. It has 47 huts.

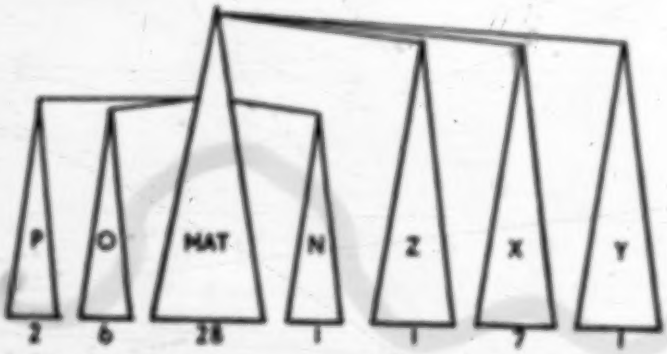

Diagram 4. The Ownership of Huts in Cikoja Village.

One of them is a dormitory for adolescent boys and we may ignore it in this analysis. Members of the dominant matrilineage live in 28 of the huts. Members of patrilaterally-linked groups are living in the remaining 19 huts. There are 6 of these patrilaterally-linked groups in the village and I have indicated them by the letters N, O, P, X, Y and Z. Their origin is as follows:

Z	A descendant of Cikoja IV's first wife	1 hut
X	The descendants of Cikoja IV's second wife	7 huts
Y	The descendants of Cikoja IV's third wife	1 hut

2: Mitchell E-5 (1946-1949) 1956 FT7 Yao FT7

N A descendant of Cikoja V's first wife . . . . 1 hut 613
O The descendants of Cikoja V's brother's first wife . . 6 huts 621
P The descendants of Cikoja V's brother's second wife . . 2 huts

All these wives were slaves. The present Cikoja has no children.

In this table I have counted huts owned jointly by a member of the dominant matrilineage and a patrilateral group (i.e. in cross-cousin marriage) as belonging to the matrilineage; huts belonging to Z and X group as Z, etc. The exact ownership of the huts is set out in Table XXVII. It shows the number of

TABLE XXVII

OWNERSHIP OF HUTS IN CIKOJA VILLAGE

Origin of wife:	Origin of husband: Mat.	Z	X	Y	N	O	P	Outsid.	Wid.	Div.	Total
Mat. .	—	1	2	—	1	—	—	15	1	1	21
Z . .	—	—	—	—	—	—	—	1	—	—	1
X . .	1	—	—	—	—	—	—	7	—	—	8
Y . .	1	—	—	—	—	—	—	1	—	—	2
N . .	2	—	—	—	—	—	—	1	—	—	3
O . .	—	—	—	—	—	—	—	3	—	2	5
P . .	—	—	—	—	—	—	—	1	1	—	2
Outsid.	3	—	—	—	—	1	—	—	—	—	4
Wid. .	—	—	—	—	—	—	—	—	—	—	—
Div. .	—	—	—	—	—	—	—	—	—	—	—
Total	7	1	2	—	1	1	—	29	2	3	46

Mat. = Member of the dominant matrilineage.
Z, X, Y, N, O, P = Groups linked patrilaterally to the dominant matrilineage.
Outsid. = Outsiders or members of other villages.

men and women in the village who are married either to spouses from other villages or from this village, and the men and women who own huts but who are widowed and divorced. The distribution of these huts is set out in the village plan in Appendix D.

We have already seen that the social distance between sections of the matrilineage is reflected in the physical separation of their huts.[1] The social distance between the dominant matrilineage and the patrilaterally-linked groups is much greater than between

[1] See Chap. VI, p. 164.

2: Mitchell E-5 (1946-1949) 1956 FT7 Yao FT7

613 621 sections of a matrilineage, and accordingly the huts of members of the dominant matrilineage are physically separated more distinctly from the huts of members of the patrilaterally-linked groups than from one another. As they develop their corporate identity the members of each matrilineage tend to build together and a little distance away from the main settlement of the other matrilineages. In Cikoja's village this tendency is seen quite plainly. There are two large patrilaterally-linked groups in the village. These are the children and matrilineal descendants of Cikoja IV's second wife (represented in the plan as N), and the children and matrilineal descendants of the first wife of Maperera, the brother of Cikoja V (represented in the plan as O). These two groups are situated quite separately from the main matrilineal block of the village. The huts of X matrilineage are hidden from the view of the rest of the village and must be reached by a path. The space between huts of O matrilineage and the remainder of the matrilineal block is clear, but in it there are some large trees and the grave of Cikoja V. The huts of the three women and the one man of N matrilineage are close together in the village but scarcely distinguishable from the huts of the main matrilineage. The huts of two women of Y matrilineage are set on the extremity of the village and are not yet separated from the huts of other lineages. Note how the huts of the villagers who have married their 'cross-cousins' are placed within the village as a whole. Huts 32 and 33 belonging to the two women of X lineage have been placed between the main block of the X matrilineage and the matrilineage of Jauma (Ma_1), who is married to one of these women. Huts 10 and 11, where members of the dominant matrilineage and the patrilaterally-linked lineage N have intermarried, are placed on the mutual fringe of these two groups. The three men of the patrilaterally-linked lineage X who are married into the dominant lineage form a little block in the north-western corner of the village. As soon as the patrilaterally-linked groups develop their identity and are able to express their autonomy, they tend to build in separate sections and to form corporate but component parts of the village.

613 582 One of the clearest ways in which the autonomy of the matrilineage is expressed is in the arrangements made about marriage sureties. In Cikoja's village, Cikoja himself is senior

2: Mitchell E-5 (1946-1949) 1956 FT7 Yao FT7

613 The father and headman is almost forgotten in those villages which, though founded by him, do not contain any of his
● 621 matrilineage. Sometimes men who have a number of adult
622 children move away and found small villages of their own. I have struck a few villages of this type on the outskirts of White settlement areas at Namwera and near Zomba. The man has been a servant of the Whites as, say, an estate labourer. After ten or fifteen years on the estates he decides to stop working. Local men have probably married his daughters and he has made acquaintances with local people, while his attachment to his home village has become attenuated. Consequently, with his daughters he sets up his own homestead somewhere near the estate. He is probably both senior and junior marriage surety for his daughters' marriages, and also responsible for the welfare of his children and grandchildren. He reports serious illnesses and deaths to his wife's brother or her male uterine kinsmen, but otherwise he runs the internal affairs of his village as if he were the senior matrilineal kinsman. But as his sons grow up the sorority-group organization exerts itself, and soon his adult sons begin to take over the more arduous duties concerning the affairs of their sisters. They now walk to a sister's husband's home to tell of the husband's illnesses, or trudge for miles to find a diviner when one of the babies is ill. Their father still retains control over the village land and other important affairs concerning the village as a whole. At this stage in its history the hamlet will be known by his name. When he dies the control of the hamlet passes to his eldest son, and now it assumes once again the pattern of the ordinary Yao village. For a while it may retain the name of the father, but in due course it begins to be known by the name of the son. Gradually the father fades into the background and the son comes to the fore. Eventually, when the son dies, his sister's son assumes control over the village and inherits the name. Now there are probably some of the original headman's sons' children living in the village and forming the nucleus of a linked matrilineage. In spite of the foundation of the village as an extended family, the lineage principle soon begins to mould the village into the typical Yao pattern. It is clear from many of my genealogies in Malemia area that when villages first moved in they were made up of a man and wife and children. Now after, say, twenty years the 'extended family' pattern has com-

2: Mitchell E-5 (1946-1949) 1956 FT7 Yao FT7

 613

pletely disappeared and we have in its place a straightforward 621
localized matrilineage as in Ali Kasunka village. 622

The Headman as the Link between the Dominant Lineage and the Patrilaterally-linked Groups

A headman's position when his own children or the children 578
of his predecessor have started to operate as a corporate group 613
in the village is clearly difficult. To the dominant matrilineage 622
they are outsiders, and they are a source of tension in the more complex villages. This, in essence, is the situation about which the officiating headmen have almost certainly warned him at the installation ceremony, when they told him to beware of his wife's chatter, because it may bring about a split of the village. The headman occupies a position of jural authority over his matrilineal relatives. He has succeeded to the name of his mother's brother and is structurally the most senior matrilineal kinsman in the village. He is directly responsible in court and outside it for the behaviour and welfare of the matrilineage members. At the same time he is personally attached to his children by ties of intimacy and sentiment. Where there is a conflict between his own children and the matrilineage members he is placed in an invidious position. By legal right he should support his lineage members, by moral right he cannot spurn his children. What he tries to do as a rule is to browbeat his matrilineal relatives into submission to maintain the peace within the village. He runs the risk, however, of alienating the support of his sisters who may turn to his younger brothers and leave the village. This is what happened in Mponda's village, as I have outlined earlier.[1] Here, it will be recalled, a quarrel started between two young girls over a pounding mortar. It spread to the mothers of the girls, who were the headman's wife and his sister. The headman tried to browbeat his sister into submission, but she immediately turned to her younger brother. The result was that the headman lost his sisters to his younger brother.

The way in which the two opposed groups in the village crystallize out into opposed factions cannot be more clearly shown than in the sequence of events in Mpakata village, in January 1947.

Mpakata was the headman of the village, and he had three younger brothers, Walusa, Merison and Nanculuya. Ali Cibwana, Mpakata's

[1] See Chap. VI, p. 155.

2: Mitchell E-5 (1946-1949) 1956 FT7 Yao FT7

the significance of this formulation of his position is clear. It is when he shows partiality that the village under him is likely to break up. If he sides with his children his matrilineal kin are almost sure to move out; if he sides with his matrilineal kin, his children are likely either to return to their matrilineal village or, if they are adult, split off to set up a village of their own. The situation is precarious for the headman and it is very difficult for him to avoid a split in the village if he cannot keep the two opposed groups at peace.

My investigations show that few villages have contained patrilaterally-linked groups through the lives of two village headmen, unless these groups were descended from slaves. When the headman dies his successor assumes his name and social rôle. He also assumes the position of father towards the remaining children, who are in fact his cross-cousins. But his relationship towards them is not the same as that of father to children. The intimate link of the blood tie has been lost and the relationship becomes formalized. As more and more headmen succeed the genealogical link between the patrilaterally-linked groups and the dominant matrilineage becomes more and more remote, and the relationship becomes more and more casual. What usually happens is that shortly after the death of the headman and father, the patrilaterally-linked group takes exception to what the new headman does or says and moves off to found a village of its own. The case history I quoted earlier [1] brought this out clearly. The new headman had had intercourse with the wives of his 'son'. The son complained to the arbitrators in the dispute that 'he should have been as a father to me, and he is not'. The result was that the son refused compensation, and moved out of the village with his sisters to build on his own. When this happens the father-son relationship between the two villages is preserved and perpetuated, but the link is entirely formal and co-operation between them is limited to mutual attendance at funerals.

Patrilaterally-linked Groups as the Legacy of Slavery

Slave-groups in a village are usually linked patrilaterally to the dominant lineage. This is because the headman who was usually the captor of the slaves kept the women as concubines. They were given quasi-child status in the village, so that their children

[1] 'The Split of Cikumba Village', see Chap. V, p. 127.

2: Mitchell E-5 (1946-1949) 1956 FT7 Yao FT7

567 613 621 [608] were called *yisikulu* (grandchildren) by the headman, who in turn was called *ambuje* (grandparent or master) by the slaves. The grandchild–grandparent relationship became fused with the master–slave relationship as the use of the term *ambuje* for master suggests. The slave descendants as a rule have no relatives in the neighbourhood. The Yao always redeemed uterine kin whom they found in slavery by replacing them with other slaves, usually taken or bought from the Nyanja, Ngoni or Bisa. Where there are slave-groups in a village to-day, they have frequently been bought or captured in distant places, so that their kinsmen have been unable to trace them. How much this

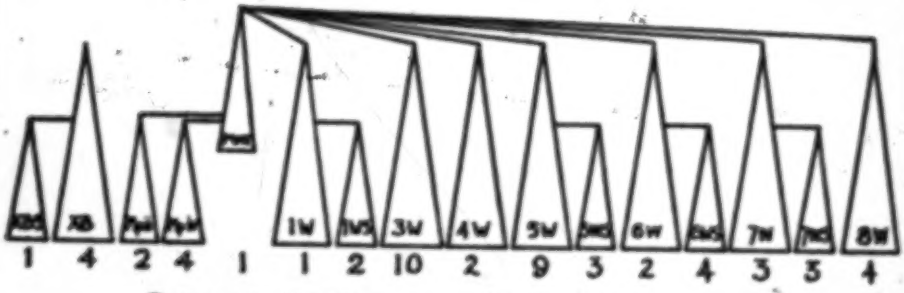

Diagram 5. The Ownership of Huts in Mpumbe Village.

has prevented slave-groups from leaving Yao villages I cannot say. Certainly before the White conquest members of a slave-group could only leave their captor's village at the risk of death. But after the White conquest it seems that many of the slave-groups left to set up their own villages. Many, on the other hand, no doubt for personal reasons, stayed with their captors in their villages, and are there to-day. In Cikoja's village, for example, there are six of these groups. Some are not very large, but only 20 of the 46 huts are owned by members of the dominant matrilineage who are not married to descendants of slaves. Eight are owned by members of the dominant matrilineage who have married slave descendants, and the remainder, 18 huts, are owned by members of the slave-groups who have married outsiders. This is a typical distribution of hut ownership. At one extreme is the pure matrilineal village such as Ali Kasunka's and at the other is the village in which the dominant lineage is barely represented. A village of this type was Mpumbe

2: Mitchell E-5 (1946-1949) 1956 FT7 Yao FT7

when I visited it in 1947.[1] The basic structure of this village is set out in Diagram 5. Here the headman[2] was the last surviving member of the dominant matrilineage. The founder of the village, his mother's brother, had thirteen slave concubines. Some of these were barren but others produced children to give this complex structure. In this village the 55 huts were arranged in 16 different affiliations. The details are set out in Table XXIX. These groups were held together by Mpumbe IV, old, blind and doddering as he was. The virtual leader of the village was his elder brother's son, a man in his late forties or early fifties. When Mpumbe died, late in 1948, the people said that it was because of the sorcery of his brother's son who wished to take over the name of the village. This led to a dispute, which ended in the brother's son's leaving to found a new village about 15 miles away. A distant sister's son, as I have said, succeeded to the headmanship, and the reduced village was reunited under this new leader. 567 613 621

However, this is an extremely unusual type of village as most villages, if they are not simple matrilineal groups, have only one patrilaterally-linked group living with them. The reasons for this are firstly, that if patrilaterally-linked matrilineages develop at all in the modern villages, they move out very soon after the death of their progenitor, and, secondly, that there are very few of the old slave-raiders' villages left intact.

Cross-cousin and Other Kinds of Intra-village Marriages 582

A most important factor in the welding of patrilaterally-linked groups to the dominant matrilineage is marriage. The tradition of cross-cousin marriage is very strong among the Yao. A person may marry either type of cross-cousin but in practice preference is given to a father's sister's daughter—i.e. the woman is married to her mother's brother's son. There is a special term for cross-cousins, *asiwani*, which is used by either male or female talking to either sex. Between cross-cousins, especially cross-sexually, there is a joking-relationship which may vary all the way from ribald joking to sexual advances. Some of my male informants say that sexual intercourse may take place between cross-cousins 601 605

[1] See also Chap. VI, p. 161, and Chap. III, p. 59.

[2] He died late in 1948 and was succeeded by a distant 'sister's son' from the village of his perpetual son, Ngongondo.

[text continues on p. 199]

2: Mitchell E-5 (1946-1949) 1956 FT7 Yao FT7

613
621

TABLE XXIX

OWNERSHIP OF HUTS IN MPUMBE VILLAGE

Affiliation of women:	*Affiliation of men:* Mat.	IW	IWS	3W	4W	5W	5WS	6W	6WS	7W	7WS	8W	Mpii	Mpiv	XB	XBS	Out.	Div.	Wid.	Total
Mat.	–	–	–	–	–	–	–	–	–	–	–	–	–	–	–	–	–	–	–	–
IW	–	–	–	–	–	–	–	–	–	–	–	–	–	–	–	–	1	–	–	1
IWS	–	–	–	–	–	–	–	–	–	–	–	–	–	–	–	–	1	1	–	2
3W	–	–	–	–	–	1	–	–	–	–	–	–	–	–	1	–	4	–	1	7
4W	–	–	–	–	–	–	–	–	–	–	–	–	–	–	–	–	–	–	–	–
5W	–	–	–	1	–	–	–	–	–	–	–	–	–	–	–	–	5	–	2	8
5WS	–	–	–	–	–	–	–	–	–	–	–	–	–	–	–	–	2	1	–	3
6W	–	–	–	–	–	–	–	–	–	–	–	–	–	–	–	–	1	–	–	1
6WS	–	–	–	–	–	–	–	–	–	–	–	–	–	–	–	–	2	–	–	2
7W	–	–	–	–	–	–	–	–	–	–	–	–	–	–	–	–	–	–	–	–
7WS	–	–	–	1	–	–	–	–	–	–	–	–	–	–	–	–	3	–	–	4
8W	–	–	–	–	–	–	–	–	–	–	–	–	–	–	–	–	1	–	1	2
Mpii	–	–	–	–	2	–	–	–	–	–	–	–	–	–	–	–	–	1	1	4
Mpiv	1	–	–	–	–	–	–	–	–	–	–	–	–	–	–	–	3	–	1	5
XB	–	–	1	–	–	–	–	–	–	–	–	1	–	–	–	–	–	3	–	5
XBS	–	–	–	1	–	–	–	–	–	–	–	–	–	–	–	–	–	–	–	1
Out.	–	–	–	–	–	2	–	1	2	3	–	1	–	–	–	1	–	–	–	10
Div.	–	–	–	–	–	–	–	–	–	–	–	–	–	–	–	–	–	–	–	–
Wid.	–	–	–	–	–	–	–	–	–	–	–	–	–	–	–	–	–	–	–	–
Total	1	–	1	3	2	3	–	1	2	3	–	2	–	–	1	1	23	6	6	55

Notes. This table is on the same principle as Table XXVII. Here IW stands for the matrilineal descendants of Mpumbe I's first wife, 2WS for the matrilineal descendants of his second wife's son. Mpii stands for the matrilineal descendants of Mpumbe II's wife, and of course if she is alive she is included in the group. XB are the descendants of a classificatory brother of Mpumbe I. I am uncertain of his exact genealogical relationship to Mpumbe I. There are two huts not in this table. Hut 23 is occupied by Mpumbe II's late daughter's husband. Instead of moving back to his matrilineal village, this man has brought another woman into Mpumbe's. Hut 16 is occupied by the widow of Capola (Mpumbe I's ZS) and she has had no children.

In a village as complex as this the classification of the ownership of huts becomes arbitrary. Because of the amount of intermarriage between the component lineages most individuals can trace their descent from Mpumbe I by two or three lines. Here I have classified people into lineages by matrilineal descent as the first criterion. I have classified them into groups after that by one patrilateral link rather than by two, etc.

601 To Ego therefore, in a lineage linked through one patrilateral link:

605 Any person in the first ascending generation is 'father' or
613 'female father'.

Any person in the same generation is 'cross-cousin'.

Any person in the first descending generation is 'child'.

Those in the second ascending generation are called 'grandparent' and those in the second descending generation are called 'grandchildren'. By the merging of alternate generations, those in the second ascending and second descending generation may also be called 'cross-cousin'.

Where the subsidiary lineage is connected to the dominant lineage through two patrilateral links the kinship terms for siblings is applied to Ego's generation. In Diagram 7 the linked lineage marked A is connected to the dominant lineage through Ego's MMBS. Ego calls his mother's mother's brother's son 'father' and, therefore, calls his mother's mother's brother's sons' children by the appropriate sibling terms.

If a subsidiary lineage were connected through three patrilateral links the kinship nomenclature would be the same as if there were only one link. Lineages connected to dominant lineages through two or more patrilateral links are very rare. Most subsidiary lineages are connected through one patrilateral link only. In any village the generation differences between members of dominant and subsidiary lineages tend to be obscured. The Yao tend to see the component lineages as wholes, and therefore speak of the relationships between members of the dominant lineage and members of the subsidiary lineages in general as 'cross-cousinship' (*cisuwani*). It is only in special situations that the exact relationship becomes important.

605 The pattern of behaviour between cross-cousins is consistent
578 with this view of their rôles in the make-up of a village. In the
621 typical Yao village there are two or three groups who are united in their extra-village affairs but opposed in internal relationships. Their hostility to each other comes to the surface at the slightest provocation, but they are, nevertheless, co-villagers. They are kin and yet not kin, because the Yao look upon kinship as primarily matrilineal. They talk of the link through the father as 'not proper kinship'. The hostility between the members of the different cross-cousin groups in the village is dissipated

2: Mitchell E-5 (1946-1949) 1956 FT7 Yao FT7

in a joking-relationship which is more intense between men and women. Men and women in Yao public life always behave distantly to each other; hence joking-relationships are most intense between male and female cross-cousins. The joking-relationships between cross-cousins of the same sex is much more subdued and limited. The village headman himself, if he is not the actual father of the cross-cousins, is likely to be the butt of most of this. His visits to the huts of his cross-cousins to give them irksome instructions is an especial occasion for this sort of joking. Cikoja ordered his female cross-cousins to sweep a site for my tent when I first went to his village. I was most embarrassed by the insults that were hurled at his head during this procedure, but he took it all calmly and said nothing. The hostility inherent in the headman–villager relationship, together with the opposition between the dominant matrilineage and the patrilaterally-linked groups, provided an opportunity *par excellence* for joking. Thus the joking between cross-cousins in the village context is a means whereby the hostility between the component groups is dissipated and the harmony within the village maintained.

The groups are, of course, welded more closely by cross-cousin marriages which are not only allowed but prescribed. By cross-cousin marriage a man from one of the component groups of the village may marry and yet not leave the village. He may in fact have to build a hut in another part of the village, but this is obviously not the separation that uxorilocal marriage entails. At the same time, in a village where the headmen have married their cross-cousins, there will be fewer patrilaterally-linked groups, so that the village will be less complex and consequently less liable to internal dissension. If cross-cousin marriages were not practised, and if the children of the headmen and senior members of the linked lineages did not return to their matrilineal villages on the death of one of their parents, the intra-village situation could in time become extremely complex. Assuming that each linked group had at least one male member married virilocally, the number of related groups would double itself in each generation.[1] However, because of limiting economic factors I describe later and the disruptive social processes within villages, this situation never occurs in practice, and Yao villages on the whole remain relatively simple in structure.

[1] See detailed argument and diagram in *Seven Tribes*, 333.

2: Mitchell E-5 (1946-1949) 1956 FT7 Yao FT7

Other Types of Village Structure

621 571 Linked groups in most villages are connected by patrilateral ties, but other kinsmen, or even unrelated persons, are also found in villages. I have been describing essentially the organization of groups. Some kinsmen do in fact come to live in villages because of personal links to the headman or some other villager. If a man or woman does this, he or she usually has a single hut which is placed close to his or her kinsman. If the person lives in the village long enough a related group may grow up around him or her, and when the children reach adulthood this group will become internally organized and corporate in its dealings with the other groups in the village. But this seldom happens, because the ties to the resident kinsman are usually too weak to hold the children, or the causes which drove the founder of the new group out of his or her original village have disappeared. Children may leave a village with their mother because she was accused of being a sorceress, and go to live in the village where her brother is married. When she dies, or the incident is forgotten, they may go back to their matrilineal village. For example, Bt. Mkwinda of Cikoja village ran away with her husband after her child was supposed to have been bewitched by her mother. But her children, as they grew up, came back to marry in the village of origin, or at least to contract marriages near it. In Chiwalo's, Nyambi's and Kawinga's areas, where I have recorded most genealogies of villages, I found few people who were neither matrilineal- nor patrilaterally-linked relatives. In Malemia area, which is nearer Zomba, the situation was 621 somewhat different. The dominant matrilineage- and patrilater- 571 ally-linked groups of the typical Yao village were still quite easily 361 discernible. But there were other related and unrelated groups and huts in the villages. An example of this is Citenjele village,[1] on the north boundary of Malemia's area. There the main village contained the following huts:

Dominant matrilineage	22
Groups linked through present headman	5
Hut linked through present headman's brother	1
Groups linked through previous headman	5
Groups linked through previous headman's brother	4
	37 huts

[1] See also 'An Outline of the Social Structure of Malemia Area', 36–40.

2: Mitchell E-5 (1946-1949) 1956 FT7 Yao FT7

About 250 yards to the north-west is a single hut belonging to the sister of the husband of one of the present headman's daughters. In the middle of the group on the road is a single hut of a woman who has no connections in the village at all. Her husband works in a mission garden about a mile away. About 100 yards from the north-east edge of the main block is a group of 4 huts which are unrelated to Citenjele, but which had joined him about 25 years ago before he had moved into Malemia area. About 250 yards farther to the north-east there are 2 huts owned by the daughters of the sister of the wife of a man who had married one of the female members of the dominant matrilineage. Due east about half a mile away, there is a group of 6 huts which are owned by Yao. These are unrelated groups and are under Citenjele as Administrative Village Headman, but they are for all intents and purposes separate villages.

There are other types of villages. For example, in Namwera area I found a village composed of a number of unrelated sections. The huts of each could quite easily be distinguished from those of other sections though they were built very close to each other in some parts of the village. Each section was built up on exactly the same pattern as other Yao villages—that is, there was a dominant matrilineage and sometimes some patrilaterally-linked huts. Each section had its own leader who concerned himself with its internal affairs. He, nevertheless, recognized the authority in general of a village headman, who lived in one of the sections of the village. He was the Administrative Headman for the village and he was the first to come into the area. All the other sections had had to ask him for land when they had moved into the area. His authority was confined to his duties as Administrative Headman though he was much respected and the sections called h[illegible] in regularly as an arbitrator in their affairs. But if the chief called all village headmen to the court, the leaders of the various sections went as well, so that he was not in fact their representative to outside authority in all situations. The relationships between the various sections, therefore, were very much like those between village headmen in Kawinga's area. The only difference seemed to be the amount of physical concentration of the huts.

I tried to find out why these sections lived so close to one another. My informants told me that there were many men away at labour centres and it was necessary to build the huts

2: Mitchell E-5 (1946-1949) 1956 FT7 Yao FT7

•621 close together so that the few men left in the village could protect
571 the village against man-eating lions. This is certainly an area
361 where man-eating lions are common and kill people every year. It is true also that man-eating lions have ceased their depredations in Kawinga and Nyambi areas. But I also found a similar type of village in Malemia area.[1] Here the explanation was that the villages had been made to live together by the Administration under the 1912 Ordinance. But the Ordinance was applied to the whole district, yet there are not many of these villages.

The relationships between the section leaders and the village headman are exactly the same as those between independent headmen farther south. The difference in the villages is the degree of physical concentration of the huts; which brings up for review the concept of 'the village'. I have defined the village as a discrete cluster of huts occupied by a group of kinsmen[2] and hinted that the huts were not always clearly separated from neighbouring huts. In fact the Yao word for village, *musi*, may be applied to social groups of different orders. I have already mentioned that different sections of a village may be scattered in discrete groups. The term *kamusi* (diminutive) or even *musi* may be applied to any of these clusters of huts in a situation where the larger kinship section is not involved. A man may tell his friend that he has bought some maize at Meni's village. He means that he bought the maize at the group of huts under Meni in Majaja village. In a court case, however, he would say that he had married a woman in Majaja village even though he were referring to the daughter of Meni.

621 The expanded village—i.e. the groups of kinsmen who recog-
571 nize the leadership of one man, but whose huts are relatively distantly spaced in discrete clusters—may give a stamp to the social organization in a small area of, say, a square mile or two. The dominant matrilineage of the senior headman and his patrilaterally-linked groups may all live in this area in physically separate groups, but their kinship is still dominant and they are for ritual purposes still 'of one fire'. In time any of these groups may move off and be replaced by complete strangers. The senior headman still retains his position of authority over the

[1] Ngalango village. It is described in 'An Outline of the Social Structure of Malemia Area', 35-6.

[2] Chap. I, p. 3, and Chap. V, p. 110 f.

2: Mitchell E-5 (1946-1949) 1956 FT7 Yao FT7

strangers. Meantime, the seceding group moves into some other village area at a distant place, where they are strangers themselves. The result is that kinship soon ceases to be the organizing principle in local areas, and the principle of primacy takes its place. Hence, primary[1] kinship provides the principle on which the relationships among village headmen, and therefore villages, may be organized in a local area, for only a relatively short time. Before long, for a variety of reasons, the smaller villages move away and their sites are taken by others.

Primary matrilineal kinship on the other hand retains its significance as the means whereby relationships are organized within villages. In other words, outside the lineages of the ruling families it is very difficult to record a genealogy which does more than link the component parts of a village. Beyond this genealogies are socially insignificant. Therefore, since villages are continually breaking up, genealogies are usually shallow. Once a group has broken away to found a new village, its exact genealogical link with the parent village tends to be forgotten and replaced by a formalized link of perpetual kinship between the two village headmen.

Yao society, therefore, is not 'organic' in the way that Fortes describes Tallensi society: it is not 'governed by the same principles at all levels and in every sector of the social structure'.[2] Instead different principles of organization apply at different levels of Yao society. Thus the shallow lineages that form the cores of villages are internally segmented. Villages are composed of matrilineages linked to each other usually through patrilateral ties, ties which are initially primary but become perpetual. Chiefdoms, on the other hand, may be seen as organizations of villages ranked in relation to each other and to the chief in terms of their perpetual kinship links, their antecedents, and their strength of following.

The same groups of matrilineal kinsmen may interact in three different fields of social relationships. Firstly, they may form a segment within a matrilineage. Secondly, they may form a group in a village linked initially by a primary and later by a perpetual patrilateral tie to the headman. Thirdly, if they

[1] i.e. kinship that can actually be traced as against 'putative' or 'perpetual' kinship.

[2] Fortes, *The Web of Kinship*, 341.

2: Mitchell E-5 (1946-1949) 1956 FT7 Yao FT7

621 should break away to found a new village they may become a
571 Newcomer and relatively junior hamlet in political relationships with other villages in a local area of a chiefdom.

613 The group of kinsmen in each situation exhibits different degrees of corporate identity. As part of a lineage the identity of the group, except in unusual circumstances, is merged in the identity of the lineage. As part of a village the identity of the group appears clearly enough in intra-village affairs, but is merged in the identity of the village otherwise. It is only when the group can set up as a village of its own that its identity is finally established, that is, when the group becomes fully autonomous.

The identity of a group of matrilineal kinsmen therefore varies with the extent to which matrilineal ties with other kinsmen are attenuated. They can emphasize their independence of their kinsmen by playing down the link between them. A linked lineage in a village emphasizes its *patrilateral* link with the dominant lineage and so maintains its identity within its village of residence. The members do not consider themselves a part of a matrilineage which is dominant in some other village. By the same process a newly-founded hamlet does not emphasize its detailed and intimate links with its parent village, but tends to subsume these into a formal, perpetual relationship between the respective village headmen.

In Yao society, therefore, we may distinguish three orders or levels of social grouping:

1. The matrilineage which consists of ranked lineage segments.
2. The village which consists of ranked matrilineages.
3. The chiefdom which consists of ranked villages.

It is only at the most fundamental of these levels, i.e. within the matrilineage, that matrilineal descent provides a principle for organizing group relations. At the next level, i.e. within the village, matrilineal kinship gives way to other types of primary kinship between key personalities in the structure. At the third level, i.e. within the chiefdom, kinship appears only in the form of the highly formalized 'perpetual' kinship—the actual links may well have been forgotten long ago. The same kinship term may be applied between personalities at all three levels of organization, but the content of the term changes according to the field of interaction.

2: Mitchell E-5 (1946-1949) 1956 FT7 Yao FT7

CHAPTER VIII

THE VILLAGE THROUGH TIME

IN order to present my analysis of the internal structure of Yao villages and of the position of the village in the social structure as a whole, I have given static pictures of villages at particular moments of time. But it should be clear that this description of the enduring social relationships, which appear as a static social structure, is abstracted from a series of on-going processes in which certain social relationships appear as repetitive elements.

In reality villages are constantly changing. Their personnel is replaced, their internal lineage composition changes, and they change their sites from chiefdom to chiefdom. It is perhaps easiest to visualise these changes, and the way they affect the structure, by viewing them in terms of the slow ontogenetic development of villages. Villages pass through a cycle which leads from their inception, through internal differentiation out of a larger group, to final break-up through their own differentiation, and the resumption of their original simple form.

Let us consider the typical life history of a hamlet which has just moved into a particular area. It is composed of four or five huts belonging to the daughters of one woman. The mother herself may be alive, as an old woman and very probably a widow. The daughters are adults and have with them their husbands and children. The hamlet settles down to its life in its new area. The warden of this sorority-group probably lives some miles away and the women have to send the older children to call him when they need his help. As the daughters of the women grow up, young men come to marry them. Each couple may start to live in the girl's mother's kitchen at the back of the hut. In time the husband builds a hut next door to the hut of his mother-in-law. Yao huts as a rule are made from pole and daub and they last from five to ten years. White ants eat the poles away and the thatch always leaks a little in very wet weather. The winds and the rains erode away the plaster.

2: Mitchell E-5 (1946-1949) 1956 FT7 Yao FT7

621 When a villager died in pre-White days, the hut and personal effects were destroyed. Nowadays, with the improving type of [768] dwelling, which frequently includes well-timbered doors and glass-windows, huts are treated with medicine to cleanse them of the harmful effects of the death and they are used again. But [354] all houses must be repaired continually if they are to remain habitable. Eventually most houses fall beyond repair and new houses must be built. The women pull the poles out of the ground and use them for firewood and the site is planted with pumpkins or maize by the nearest relative.[1] A new hut site is then chosen according to the wishes of the owners. As a rule outsiders are neutral about this, and a village member selects a site in accordance with his or her social position in the village. The women still stay near their mother, but they may build on the outside fringe of a group of huts. When the mother's house collapses she may in turn build her hut on the outside fringe of the group near her daughter's hut. In this way the spatial distribution of the huts gradually comes to reflect the segmentation of the lineage.

621 As the woman's daughter's children grow up and marry, the 591 woman's son persuades his wife's relatives to allow him to take his wife to live in his home village. If he is a polygynist he usually takes the senior wife, but he may take the other or others as well. His own daughters now marry uxorilocally in the village if their mother is still alive. If the parents live long enough their daughter's daughters in turn marry and build their huts there. A crisis comes when either the man or his wife dies. The children have to decide whether to stay where they are or to move back to their own matrilineal village. If they do stay at their father's village they form the nucleus of a patrilaterally-linked group. As they grow older the senior male of their matrilineage may come to live with them. Through the years while this internal differentiation is developing within the village, the huts are decaying and being rebuilt. While new hut sites are being selected the physical form of the village is reflecting the continuing social differentiation.

621 At the same time gardens are being planted and crops reaped 361 each year. The soil in the first garden sites has probably been 166 depleted already and is either lying fallow or is under cassava.

[1] Usually the name-heir of a woman, i.e. her daughter's daughter.

2: Mitchell E-5 (1946-1949) 1956 FT7 Yao FT7

As garden land becomes scarcer, members of the village have probably approached patrilateral or affinal kinsmen in other villages for personal grants of land. The lands immediately surrounding the village have long since become depleted and crops will only thrive on lands some miles away; then the village moves its site. How long it will be before this becomes necessary, depends on the fertility of the soil. Most villages must move eventually. When they do they may move a few hundred yards only, or on the other hand, they may select a site thirty to forty miles away. Whether the site is far or near, the migration is not a mass movement of the village as I have so far assumed for the purposes of analysis. As a rule a few villagers, including the headman, move first. The headman may be there a year or more before the second lot of villagers move. They usually move in sorority-groups so that when they build at the new site they place their huts in sections. Thus, the internal social organization of the village is reflected in the same way as before. The whole move may take three or four years before it is completed.

This process of development of the village and its gradual and continual reformation is sometimes hastened by the conflicts that appear within it. I have from time to time mentioned various conflicts that have led to the split of a village and the subsequent migration of one of its sections. The new section sets up a small hamlet in a distant locality, especially if the reason for its secession was sorcery. Here the general process of evolution is started anew. Its parent village, however, is strengthened by the migration since the dissident elements have left it. It continues to carry on its existence and to throw off other villages from time to time.

The number of villages, in the area I studied, is increasing with the increase of population, but the average size of each village remains constant and appears to have done so for many years.[1] But at the same time some villages as entities are disappearing while new ones are being formed. A few new villages become resorbed by their parent villages when for some reason they cannot continue their separate existence. Other villages fragment and do not split. The individual village members leave the village and go their separate ways. Very frequently when

[1] See the argument in Chap. II, p. 40.

2: Mitchell E-5 (1946-1949) 1956 FT7 Yao FT7

621 this happens the husbands take their wives to their several villages with them.

Throughout this general process the links between groups of any particular area are constantly changing but the general pattern remains constant. A village expands outwards, and the various patrilaterally-linked groups, and often some of the segments of the dominant lineage, form hamlets separate from each other. The dominance of one of the local headmen over the others is still recognized and the general pattern of primacy is maintained. Some of the earliest villages in the area remain intact through many years. Villages which were small hamlets twenty or thirty years ago, when they had just moved into the area, have become relatively senior. Many headmen who were senior then have moved, or their villages have disintegrated, or ceased to exist. Other villages have moved in and are ranked lower. Thus through time the rank of any one headman may have changed, but the ranking system and the relationships of senior to junior headmen remain unaltered.

621 The general process is the same for the whole chiefdom,
622 though there is less overall structural change than in smaller
631 areas. The more important a village headman, the less likely is his village to disappear entirely. The most important village headmen, therefore, have long histories of association with the chief. Thus while there is considerable change going on at the lowest levels of the social system, the social structure of the whole chiefdom is remarkably stable. In other words, the rate of change taking place within the structure varies directly with the level of organization within that structure. The names of the *ndona* of Kawinga, Liwonde and Malemia are the same as those of the *ndona* who accompanied these chiefs into Nyasaland in the middle of the nineteenth century. Relatively few of them have disappeared. And so it is with important village headmen. The links between them, fixed by their rank and status relative to each other in perpetual kinship and other ties, form the political structure of the chiefdoms. From chiefdom to chiefdom the same pattern of organization is concealed behind an apparent diversity of actual links.

178 But, as a result of their contact with other peoples and their
622 absorption into the economic and administrative framework of
643 the British Empire, new social relationships are developing

2: Mitchell E-5 (1946-1949) 1956 FT7 Yao FT7

APPENDIX B

GENEALOGY, HUT COUNT AND VILLAGE PLAN: ALI KASUNKA VILLAGE

Hut numbers in brackets after the names in the genealogy.
Other symbols: d = dead; mw = married out; lm = labour migrant; u = below age of puberty; k = kitchen.

361
613
621

Hut Ownership

Hut No.	Owner	Gen. Ref.
1	Bt. Kasunka	C5
2	Bt. Nsunsula	D19
3	Bt. Nzowa	D1
4	Alinje	D12
5	Bt. Tale	D15
6	Mwanaso	D10
7	Ali Kasunka	C6
8	Mbulanyao	C1
9	Anawile	C7

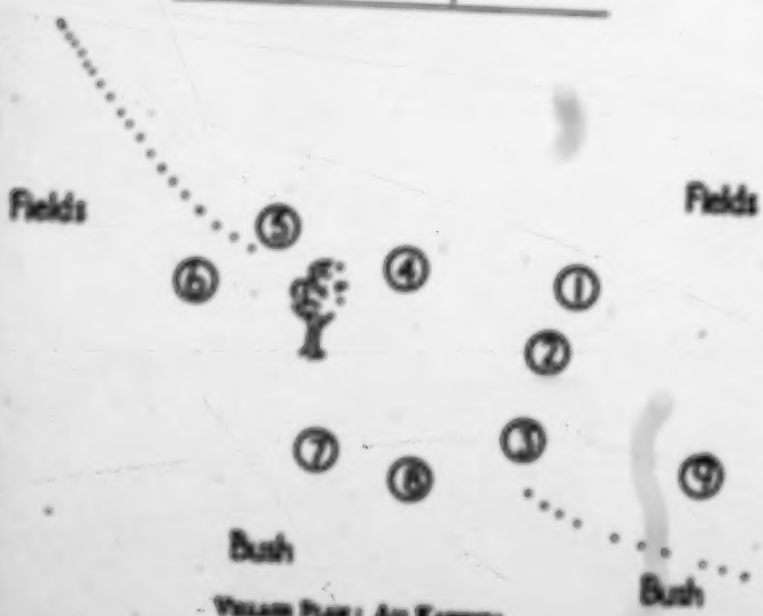

Village Plan: Ali Kasunka
(Not to Scale)
[illegible]

2: Mitchell E-5 (1946-1949) 1956 FT7 Yao FT7

APPENDIX C

SKELETON GENEALOGY, HUT COUNT AND VILLAGE PLAN: MENI SECTION OF MAJAJA VILLAGE

Only hut owners are shown in the genealogy.

361
613
621

Hut Count

Hut No.	Owner	Gen. Ref.	Hut No.	Owner	Gen. Ref.
1	Meni	B4	19	Bt. Taimu	D6
2	Empty		20	Kitchen to hut 18	
3	Ashinyenje	C8	21	Bt. Wuci	D7
4	Girls' dormitory		22	Ngwalaka	nil
5	Sayisi	D11	23	Bt. Teyali	D3
6	Dimmel		24	Bt. Saidi	D9
7	Bt. Nyili	D1	25	Bt. Saidi	D10
8	Bt. Mlungwi	D3	26	Bt. Gwemembe	C4
9	Bt. Dowa	E1	27	Ali Aini	D4
10	Bt. Wembe	D2	28	Boys' dormitory	
11	Ariwanjila	C1	29	Bt. Cimungu	C3
12	Binya	B1	30	Bt. Juma	nil
13	Ednani	C6	31	Anawyungu	B2
14	Bt. Mlenje	C5	32	Palinjeje	D8
15	Amina	B3	33	Bt. Mainja	B3
16	Bt. Cilewana	C7	34	Ambalaje	C12
17	Mwapu		35	Elbi	C11
18	Cilewi	C2	36	Lusi	C10

The following huts are not included in the genealogy:

Hut 2—Empty.
Hut 4—Girls' dormitory.
Hut 5—Dimmel.
Hut 17—Mwapu.
Hut 20—Kitchen to Hut 18.
Hut 22—Ngwalaka, a non-relative.
Hut 27—Boys' dormitory.
Hut 29—Bt. Juma, a relative of Ngwalaka.

2: Mitchell E-3 (1946-1949) 1956 FT7 Yao FT7

[p. 214]

341
613
621

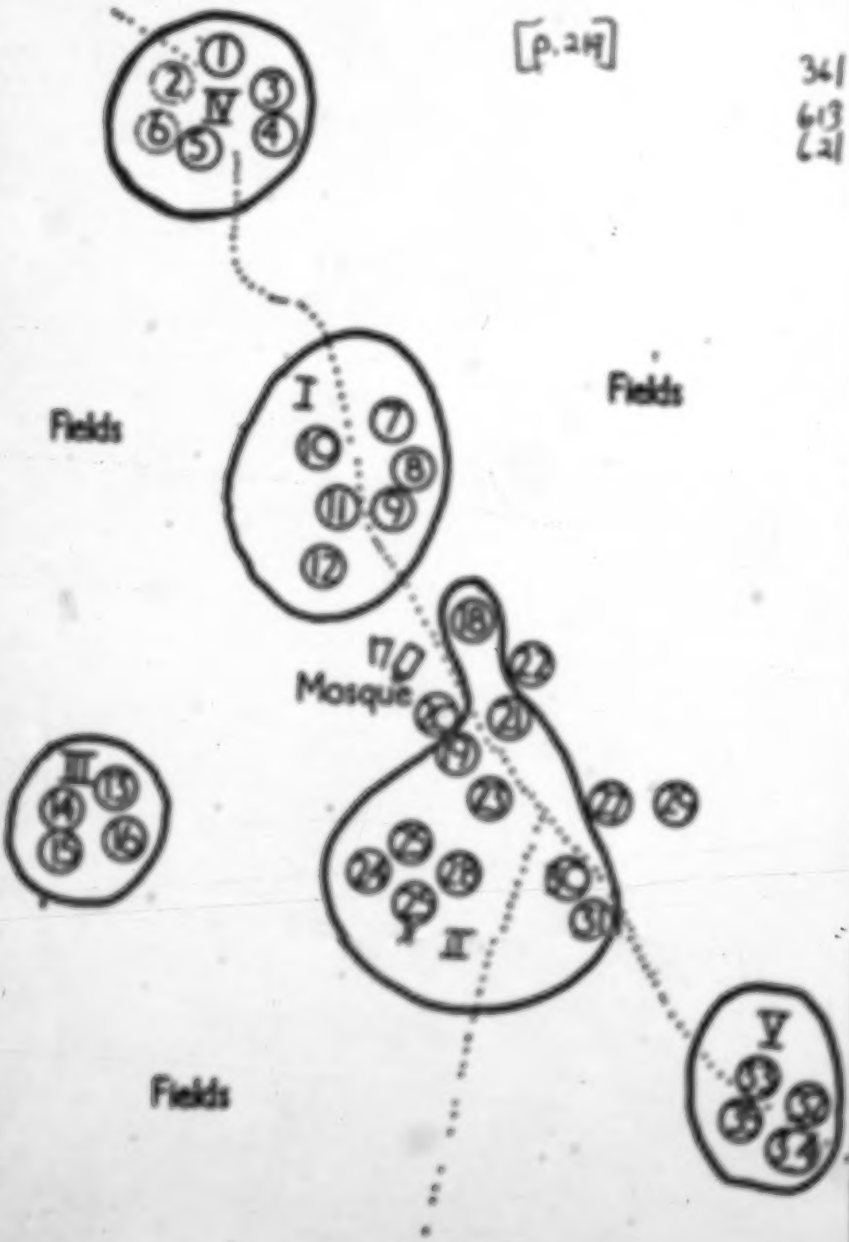

Village Plan: Mapuja
(Not to Scale)

APPENDIX D

GENEALOGY AND HUT COUNT: CIKOJA VILLAGE

Hut Count

361
613
621

Hut No.	Wife's name	Gen. Ref.	Name of husband	Gen. Ref.
1	Amazuda	D14	Mbwana	C11
2	Ayusi	E8	Katoli	D33
3	(Boys' dormitory)			
4	Bt. Tepani	F37	Mapila	E52
5	Bt. Bonda	E19	(outsider)	
6	Aniya	D15	(outsider)	
7	Bt. Azuzuma	E14	(outsider)	
8	Alusi	D16	Ali Mkwinda	C13
9	Lunjela	E13	(outsider)	
10	Ajumo	E25	Musa	D7
11	Bt. Mwumadi	G10	Nkazwila	D20
12	Bt. Bwana Isa	F16	(outsider)	
13	Bt. Amina	E4	(outsider)	
14	Anabiya	E9	(outsider)	
15	Abena	E30	Rajabu	F20
16	Bt. Selemani	D19	(outsider)	
17	Narwata	E60	Salimu ii	D3
18	Bt. Kacungu	D40	(outsider)	
19	(outsider)		Ali Tepani	E40
20	Alima	D22	(outsider)	
21	Abiya	D23	(divorced)	
22	Kalingule	E38	(outsider)	
23	Akumbiripe	E31	(outsider)	
24	Bt. Ciwina	E33	(outsider)	
25	Bt. Mwenye	C14	(outsider)	
26	Bt. Mwanjele	E55	(outsider)	
27	Alusi	E57	(outsider)	
28	Bt. Cisingu	E59	(outsider)	
29	Asideya	E56	(outsider)	
30	Tuwenje	E54	(outsider)	
31	Bt. Ulungu	D34	(outsider)	
32	Bt. Lilombu	E53	Juma	F7
33	Bt. Cikwengu	F64	(outsider)	
34	(outsider)		Cilimbu	F1
35	Bt. Madi	F10	(outsider)	
36	Bt. Aliya	F11	(outsider)	

2: Mitchell E-5 (1946-1949) 1956 FT7 Yao FT7

HUT COUNT—*continued*

Hut No.	Wife's name	Gen. Ref.	Name of husband	Gen. Ref.
37	Bt. Ntalika	E3	(outsider)	
38	Bt. Kimu	G1	(outsider)	
39	Ajawile	E50	(outsider)	
40	Bt. Maperera	D32	(outsider)	
41	(outsider)		Kasui	F3
42	Mege	F28	(outsider)	
43	Bt. Mbwana	F2	(outsider)	
44	Ayuyuje	F29	(outsider)	
45	Kasingati	F30	(outsider)	
46	Asimwana	E6	(outsider)	
47	(outsider)		Cikoja VI	E7

361
613
621

Note: The genealogies for Appendices B, C and D have been inserted as folding plates at the end of the book.

361
613
621

Village Plan: Canya
(Not to Scale)

[p.222]

KEY TO CIKOJA VILLAGE PLAN

361
613
624

Ma = Senior segment of dominant matrilineage, i.e. descendants of Ncilaga (C5).

Mb = Second segment of dominant matrilineage, i.e. descendants of Bt. Mkwinda (C6).

Mc = Third segment of dominant matrilineage, i.e. descendants of Lunjela (C8).

Ma_1 = Descendants of Atabiya (D1).

Ma_2 = Descendants of Amaliama (D2).

Mc_1 = Descendants of Amaenda (D14).

Mc_2 = Descendants of Aniya (D15).

Mc_3 = Descendants of Ahai (D16).

N, O, P, X, Y, Z = Patrilaterally-linked lineages.

S = Outsiders.

Mc_1/B = A female descendant of Amaenda married to a man from B patrilaterally-linked lineage.

[p.223]

2: Mitchell E-5 (1946-1949) 1956 FT7 Yao FT7

Generation—A B C

361
613
624

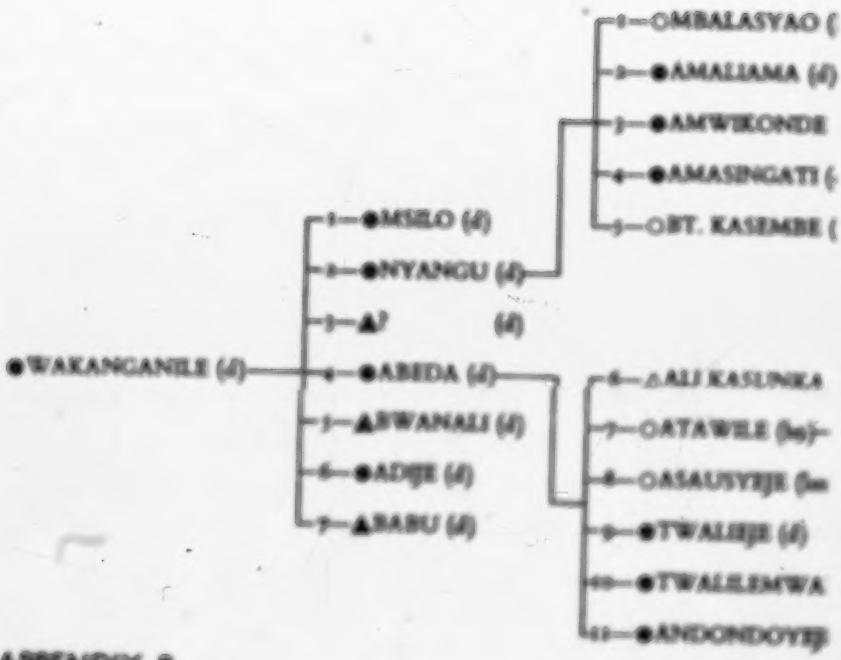

APPENDIX B

[End chart 10]

2: Mitchell E-5 (1946-1949) 1956 FT7 Yao FT7

361
613
624

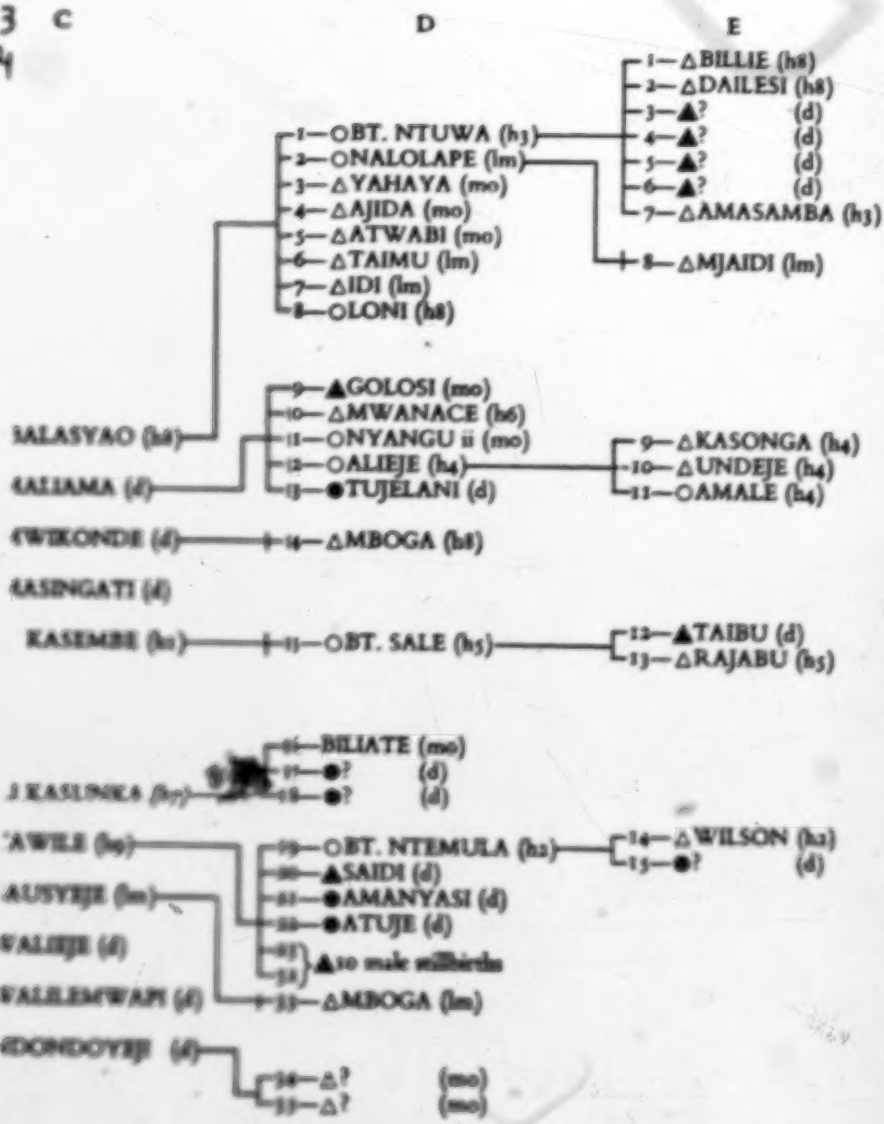

[End Chart 1b]

2: Mitchell E-5 (1946-1949) 1956 FT7 Yao FT7

361
613
621

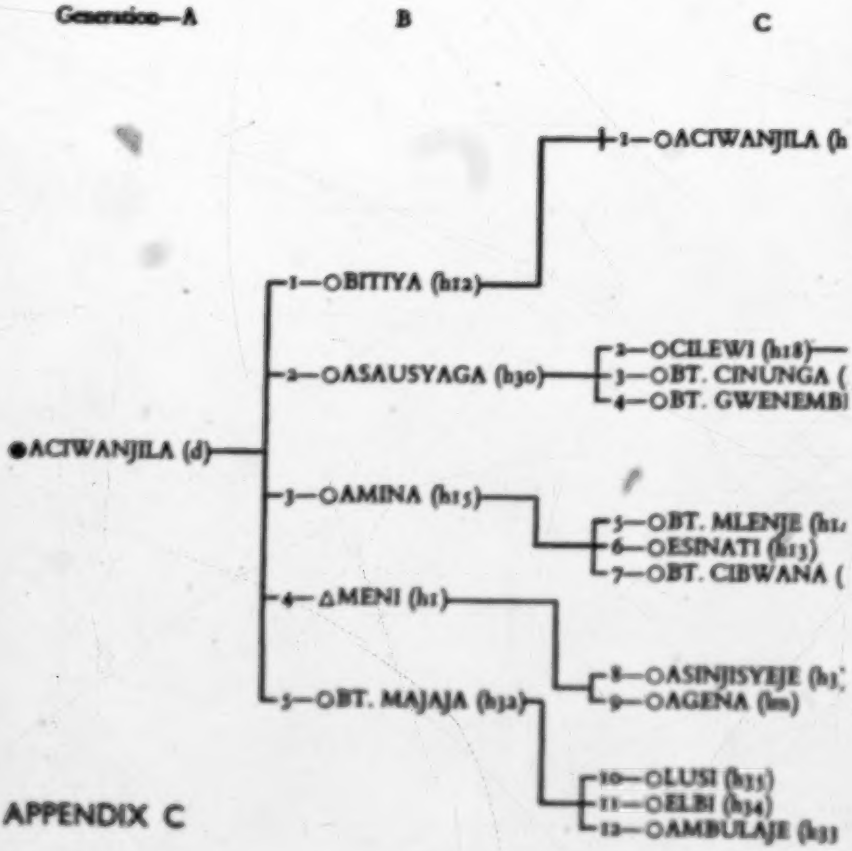

APPENDIX C

[End chart 2a]

2: Mitchell E-5 (1946-1949) 1956 FT7 Yao FT7

361
613
621

C D E

ANJILA (h11)
1—OBT. NYILI (h7) — 1—OBT. DUWA (h9)
2—OBT. WEMBA (h10)
3—OBT. MLUNGUSI (h8)
} I

4—△ALI ASINI (h26)
5—OBT. TAYALI (h23)
6—OBT. TAIMU (h19)
7—OBT. WOCI (h21)
'I (h18)
NUNGA (h28) — 8—OPALINJEJE (h31)
VENEMBE (h25)
9—OBT. SAIDI (h24)
10—OBT. SAIDI (h25k)
} II

ENJE (h14)
TI (h13)
BWANA (h16)
} III

SYEJE (h1) — 11—OSAYISI (h5)
S (hm)
} IV

35)
34)
LAJE (h33)
} V

[End chart 2b]

2: Mitchell E-5 (1946-1949) 1956 FT7 Yao FT7

Generation A B

361
613
624 APPENDIX D

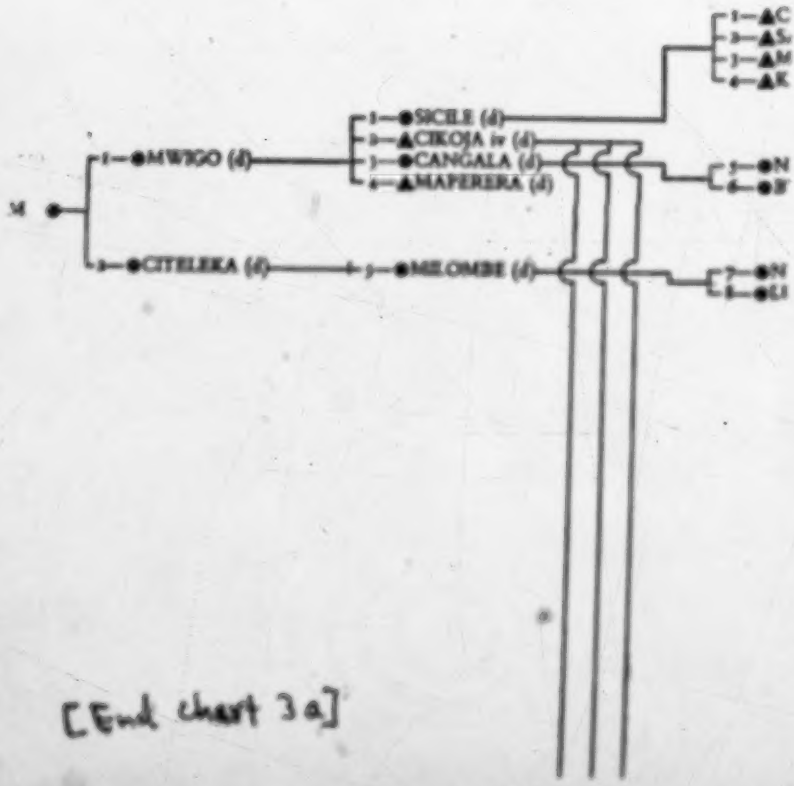

[End chart 3a]

2: Mitchell E-5 (1946-1949) 1956 FT7 Yao FT7

C D

361
613
624

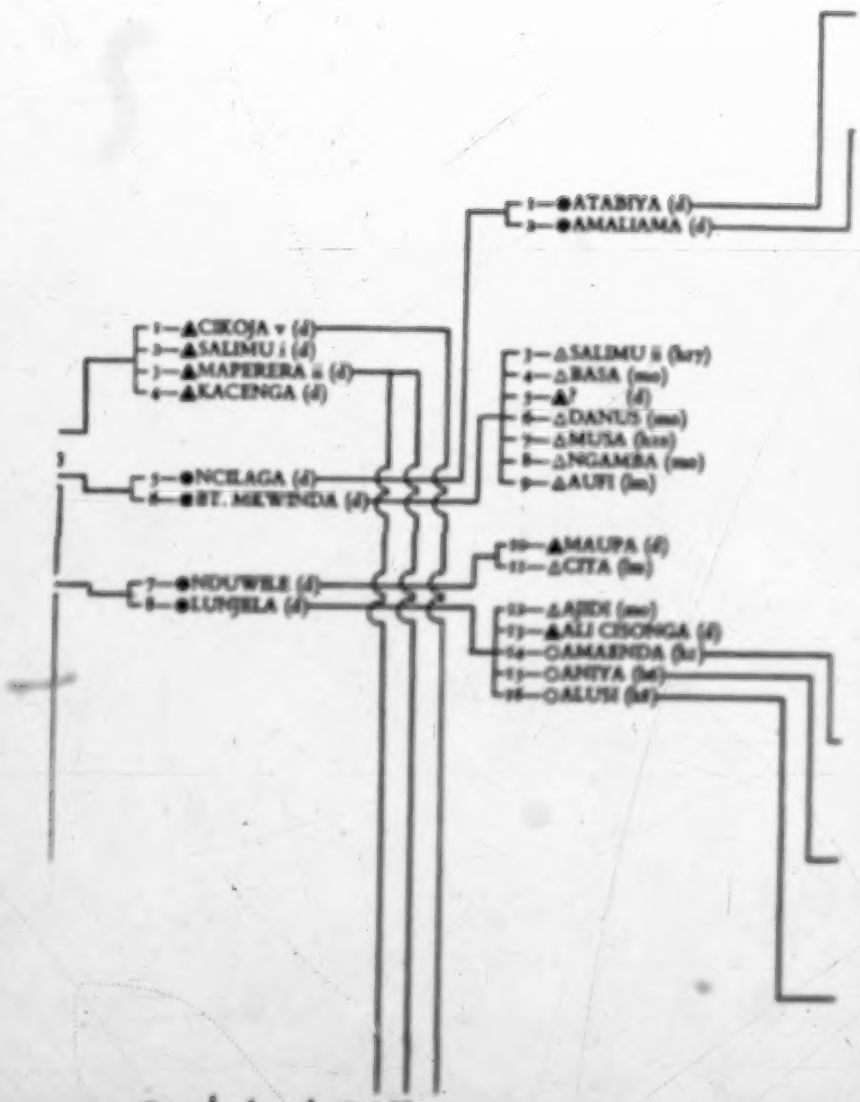

[End chart, 3 b]

2: Mitchell E-5 (1946-1949) 1956 FT7 Yao FT7

361
613
621

E

1—●WEGAMI (d)
2—●ASUNA (d)
3—○BT. NTALIKA (h37)
4—○BT. AMISA (h13)
5—●? (d)
6—○ASIMAMA (h46)
7—△CIKOJA vi (h47)
8—○AYESI (h2)
9—○ASUBIYA (h14)

F

1—△CILIMBA (h34)
2—○BT. MBWANA (h43)
3—△KAUSI (h41)
4—△GWILI (mo)
5—●? (d)
6—△SEMU (mo)
7—△JAUMA (h32)
8—▲ASSAM (d)
9—△AJISA (mo)
10—○BT. MADI (h35)
11—○BT. ALIYA (h36)
12—△SIME (u, h3)
13—△IDI (u, h3)
14—●? (d)
15—▲? (d)
16—○BT. BWANA ISA (h1
17—▲DELEMANI (d)
18—△AMIDU (mo)
19—△KANYENGA (mo)
20—△RAJABU (h15)
21—△KAPINGU (KAR)
22—△AKIBA (u, h15)
23—▲AJISA (d)
24—△FRED (mo)
25—△GERALD (u, h12k)
26—▲AJISA (d)
27—○BT. MAKWESA (lm)
28—○MEGE (h42)
29—○AYUYEJE (h44)
30—○KASI NGATI (h45)
31—○NKATENDESYAGA
32—△BILI (u, h47)
33—●? (d)
34—●? (d)
35—●? (d)
36—△KAIFA (mo)
37—○BT. TEPANI (h4)
38—△AIDINI (u, h2k)
39—△ALANGA (u, h2k)
40—▲? (d)
41—△KAUSI (u, h2)
42—△JAMES (u, h2)
43—▲? (d)
44—▲? (d)
45—△MALOGWAGA (u, h
46—▲SELEMU (d)
47—●ALUWINDA (d)
48—○? (h14)
49—○NDEWASYAGA (u, l
50—●? (d)
51—●? (d)
52—●? (d)
53—○? (u, l

(d)
(d)
47)
)
m)
A (d)
h2)
10—△LILE (mo)
11—△WAISONO (lm)
12—△AMULI (h1)
13—○LUMBELA ii (h4)
14—○BT. AMAMU (h7)
15—○INDI (h3)
16—○ALIJEPANYUMA (u, h6)
17—○AIDI (u, h6)
18—●? (d)
19—○BT. BELULA (h1)
20—△TEMBO (lm)
21—○AWULUSYA (u, h6)
22—○? (u, h6)
23—●? (d)

[Bed chart 7c]

2: Mitchell E-5 (1946-1949) 1956 FT7 Yao FT7

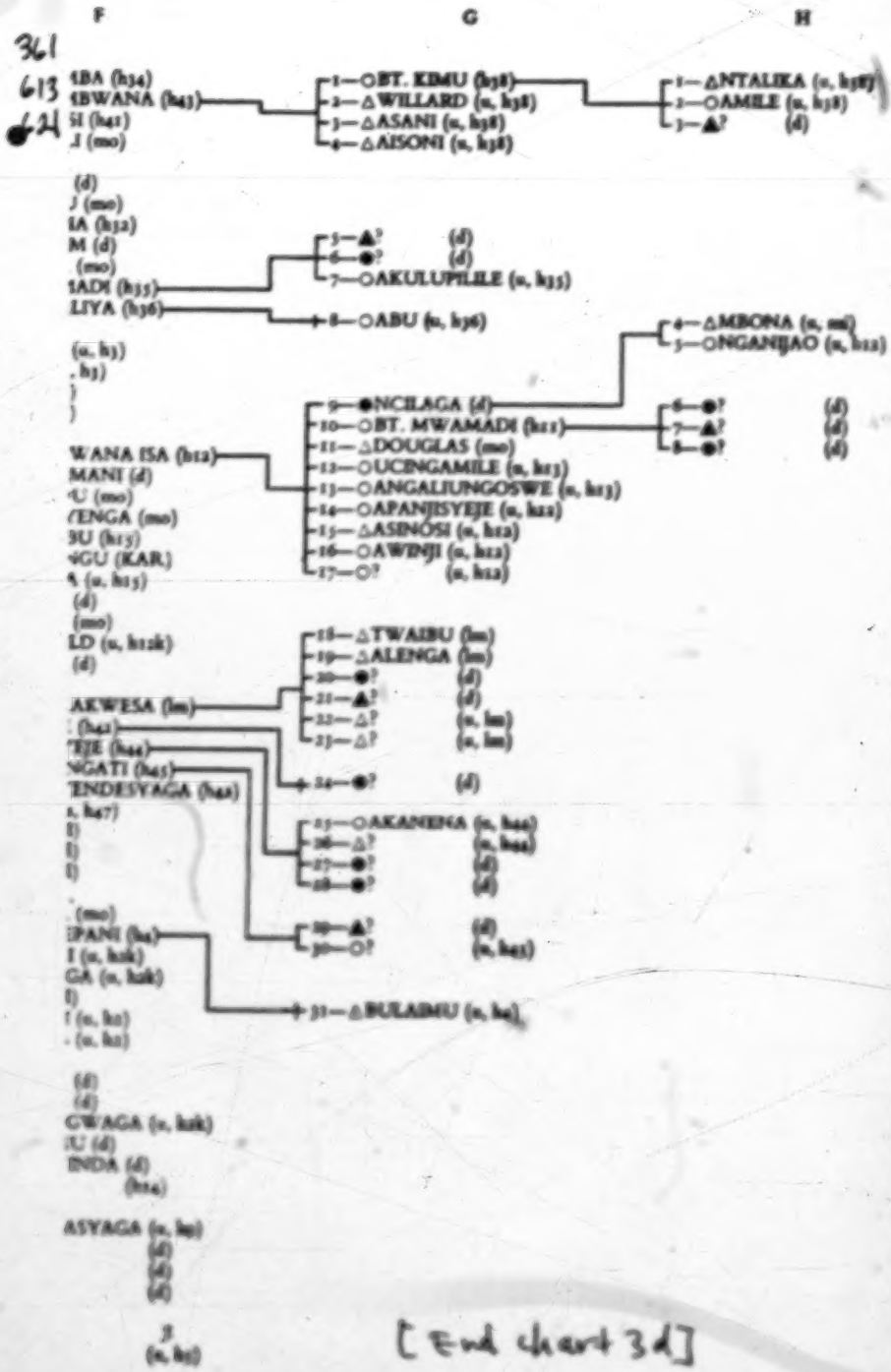

[End chart 3d]

361
613
621

Dressmaker maidiwanga in CAPITALS
Hut numbers in brackets after names
Other symbols :—
d = dead
mu = married out
lm = labour migrant
u = below age of puberty
mi = migrated
k = kitchen
KAR = King's African Rifles

[End chart 3a]

2: Mitchell E-5 (1946-1949) 1956 FT7 Yao FT7

361
613
621

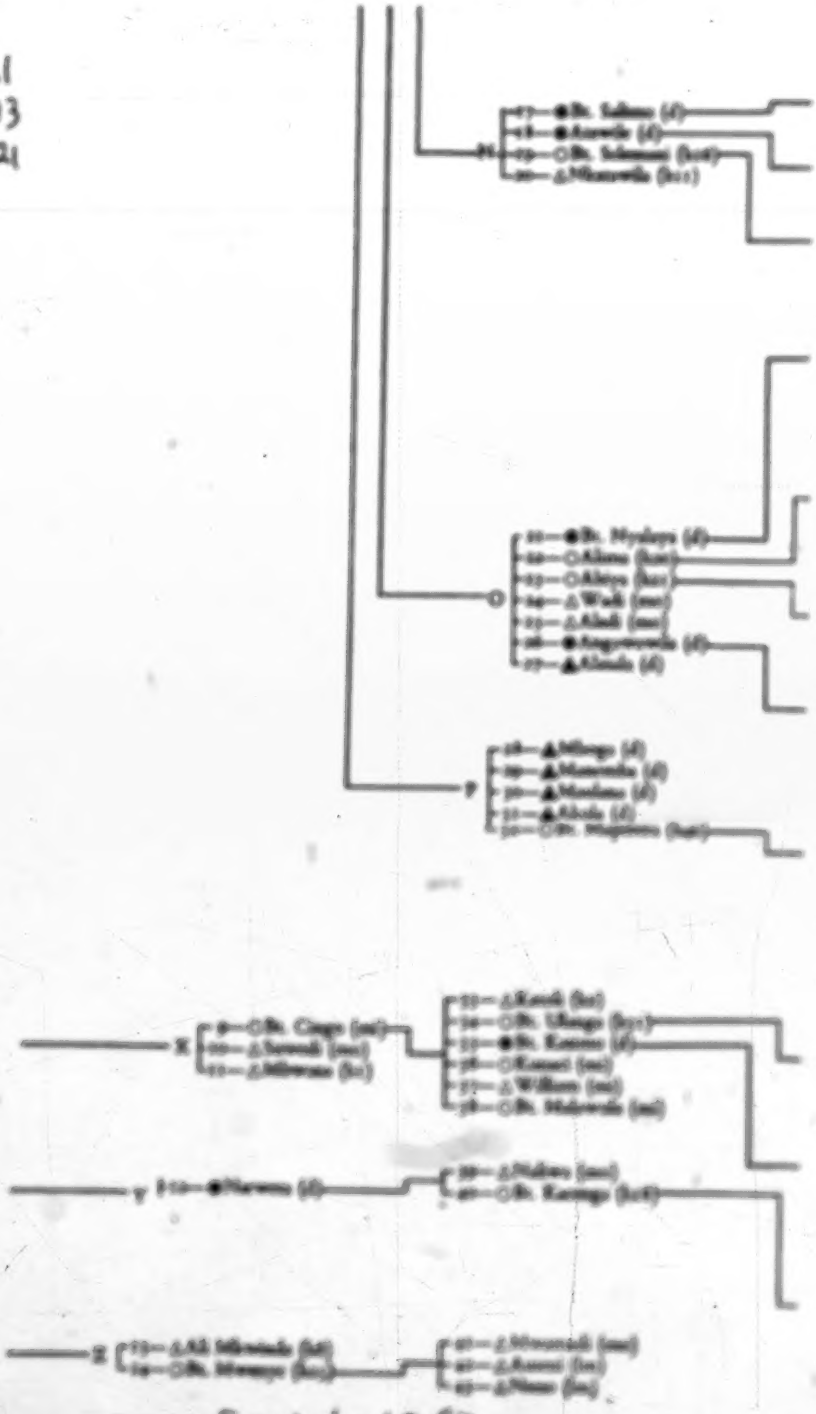

[End chart 3f]

2: Mitchell E-5 (1946-1949) 1956 FTT Yao FTT

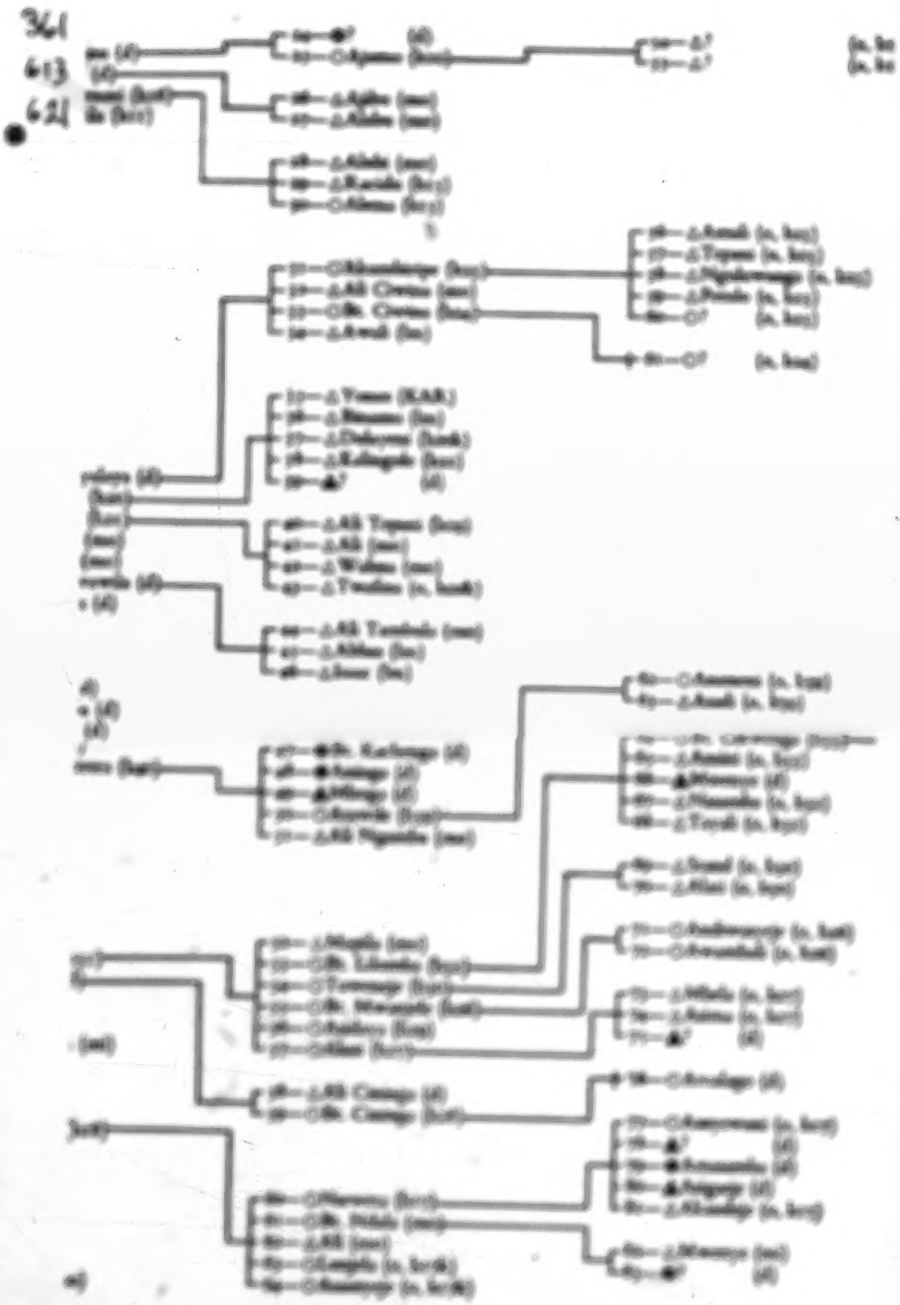

[End chart 3g]

361

613

621

[illegible]

[illegible]

[illegible]

5: Mitchell E-5 (1946-1948) 1949 FT7 Yao FT7

ship. The difficulties of his position are brought home to the neophyte village headman in speeches made by old and experienced men. On one such occasion I heard a man say, 'Some men who marry into a village are bad and can split a village like this one by telling lies to the headman, saying that his sisters are talking behind his back and are insulting him. When a headman hears all this he might break his village by ill-treating his relatives, thus causing himself to be left all alone.' In this way the headman's responsibility for maintaining harmonious relations between the members of the village and himself is emphasized. His failure to do so results in what they call a break in the village—the departure of some of the members to live elsewhere—which is a severe blow to the status of the headman. In fact, he is dependent on his dependants for status, and the Yao are quick to point this out to neophyte headmen, saying, 'A tree cannot grow without branches.'

We can better understand the situation if we consider the social structure of the Yao village a little more closely. The Yao are a matrilineal people and are dominantly matrilocal. They live in small groups of huts scattered fairly evenly over the country and from a few hundred yards to possibly a mile or so apart. Such clusters may contain as few as five or as many as sixty or more huts, occupied by between 20 and 200 people.

These people are almost always kinsfolk, and in the smaller villages they are usually all either matrilineal descendants of a common ancestress or their spouses. In the larger groups there is a more complex situation which I shall analyse below. In the simpler groups there may be no male matrilineal descendant in the village and the leadership of the group is taken over by a senior female descendant of the founder of the village. Usually, however, if the group is large, one of the male matrilineal descendants lives patrilocally in the village and assumes leadership.

The relationship between a male matrilineal descendant and the female matrilineal descendants who are in his charge is signified by the word '*ubanko*'. The word particularly refers to the relationship between a man and his sisters and I have therefore translated it as 'sorority-group'. It includes a man's full sisters, matrilineal female collaterals (whom he calls sisters), their female children, and the female children of those female children, and so on. It is usually used in the sense of 'somebody's sorority-group'. A man belonging to the descent-group of the sorority-group may refer to these women as 'our sorority-group'. The man who is in charge of the sorority-group is referred to as the *ayaw ubanko*. This could be translated as 'owner of the sorority-group' but because of the property associations with the word 'owner' in our language, I have instead translated this as 'warden of the sorority-group' which expresses more accurately the relationship between a man and his female relatives. Even in those groups where there is a female in charge of the village and no male matrilineal descendant is resident in the group, there is usually some one man, possibly married in some other village, who is warden of the sorority-group. The warden of a sorority-group has certain persons duties to perform on behalf of his charges. First, he is concerned with the good relations between members of the sorority-group and with other such groups. He has to settle most of the domestic quarrels that take place between members of the sorority-group. Second, and this is considered to be a most important function, he is the person who is the

marriage-money for the marriages of the members of the group. Briefly this means that he must be approached before a marriage can be legally contracted by any member of his charge, he or his representative is present at the ceremony which formally sanctions the marriage, and he is responsible for the behaviour of his female relative in that marriage. Third, he is immediately concerned with the physical welfare and health of his matrilineal group. He must track down the witchcraft causing their illnesses and supply the medicine to heal them. He has to arrange for the ritual purification of witchcraft after the death of one of the matrilineal group's members. Fourth, he must be present in the court-house if one of his charges is involved in a case and he is usually looked to for the money for the fine. I have known a case not to begin because the headman of the matrilineal group was not present. Frequently if the husbands of the female members of his charge default, he has to provide the hut-tax money.

Usually the headman of the matrilineal group is the eldest brother of a group of adult full sisters. The younger brothers of the group of sisters, while concerned with their welfare, do not stand in this particular responsible position. They refer to the matrilineal group as 'our matrilineal group'. The elder brother refers to the matrilineal group, he is named, as 'my matrilineal group', and this sets him over and against his younger brothers. The position that the headman holds, however, is not rigidly fixed, for a younger brother may assume control of the matrilineal group if for some reason he is dissatisfied with the way in which affairs are being conducted, and is able to assert himself.

If we recall that the status of a man in a Yao community is determined by the number of dependants that he can command, it is easy to see that relationships between an elder brother and his younger brother are distinctive. The elder brother is responsible for the actions of his younger brother in much the same way as he is for one of his matrilineal group, and the younger brothers have a great emotional attachment to their elder brothers. Yet at the same time the elder brother stands in the way of the younger brother in his striving for status, in that while the elder brother is headman of the matrilineal group the younger brother cannot be, and therefore cannot have dependants and status. It is not surprising to find that accusations of witchcraft are frequently made between brothers and the result often is that the younger brother takes the matrilineal group away from his senior brother to some other place and sets up a new village with it. Therefore, one possible source of instability in a Yao village lies in the opposition of the kinship system in a system of values which embraces status by adherence.

I have thus far been describing the simpler types of village. In the larger groups it is common for the headman of the matrilineal group to live in the village where his matrilineal group is. There he usually brings one (or sometimes more) of his wives to the village, where she lives patrilocally. The daughters that are born to her do not return to the matrilineal group from which the headman's wife came but marry and set up households near their mother in the village of their father. Thus there develops in time a second matrilineal group in the village, alongside the first matrilineal group, and related to it through the headman. At this point we may say that the man's position has changed from that of headman of a village containing a single matrilineal group, to the more complicated and less secure one of village headman over a more hetero-

5: Mitchell E-5 (1946-1948) 1949 FT7 Yao FT7

gamme group, in which his jurisdiction over one part of the village arises from his position as the warden of a sorority-group, and that which he exercises over the other sorority-group derives partly from his position as a non-matrilineal relative and partly from his own personal qualities. The warden of the second sorority-group is the headman's own son and it is he who takes over all the functions proper to that position, but the succession to the headmanship is a man's sister's son, usually, though not invariably, the first-born son of the eldest sister. Each village headman in turn brings his wife to live in his village and each headman's wife in turn tends to set up a fresh group which is of a different lineage affiliation from that of the headman. In addition to this the warden of the sorority-group formed from the first headman's children tends in due course to live patrilocally and the children of his wife set up yet another foreign group in the village. Hence, theoretically, with each generation the number of opposed groups in a village doubles itself, and in a few generations, were this to continue, the position would become extremely complex. In fact a village of long standing is seen to be composed of a central lineage group to which the headman belongs, and a series of other lineage groups related to the headman's lineage group through one or other of the past and present headmen of that village. Such groups of different lineage make-up are usually mutually opposed and are held together only by the combined influences of a weak patrilineal connexion with the headman's lineage and the personality of the present headman.

This situation is clearly an uneasy one for the headman. His wife is looked upon as a stranger and is often made to feel it. The headman's sorority-group often expresses its hostility and jealousy towards her. The children of the two groups are on no easier terms. They call each other "cross-cousin" (*jaulawa*) and are expected to marry one another. At the same time the hostility between them is formulated in joking relationships. This critical situation of the headman is made clear to him on the day of his succession. One headman was told: "As you have got wives, do not listen to what they say. They may be lying. Sometimes they will quarrel with your sisters and say that your sisters have been insulting you. This is false. When you hear these reports you may be unfair to your sisters and the people will say that you have broken your village through listening to women." Thus when conflicts arise between members of a village the headman is in a peculiar position and it is difficult for him to remain impartial. In such a situation the tendency is to call in an outsider to try to settle the differences. Sometimes these differences are patched up and the village continues as a unit. But, particularly after the death of the first village headman, the tendency is for one of the groups to move away to a completely new area, there to set up a unit of its own.

I quote an actual case to illustrate this procedure:

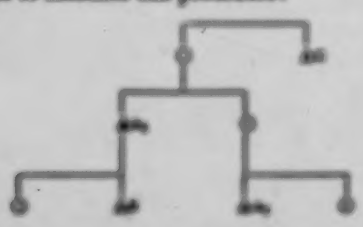

621 "In 1948 village A had about 30 huts in it. A certain man B was the son of the previous headman called A_1 and hence mother's brother's son or cross-cousin of the present headman called A_2. B had two wives living patrilocally and while B was serving in the Army he had a letter from one of his sisters (i.e. his mother's brother's daughter or cross-cousin to the headman) to say that A_2 was sleeping with B's wives. When B returned he started making inquiries from his wives and he eventually secured a confession from them. B then went to a man called C, who stood in the relationship of mother's brother to the original A_1, and complained about the behaviour of the village headman. C also instituted inquiries and ascertained that it was true. C then approached a local headman of some standing (whom I shall call D) and asked him to adjudicate in the case. D pronounced A_2 guilty and awarded compensation of £5. 10s. to B. B, however, refused to take the money, and said that he wished to leave the village. D observed that he had every right to do this and that A_2 had no right to complain "since he had broken the village himself". B took his security-group, who comprised about twenty of the thirty huts, to a place about thirty miles away and set up a village of his own. The security-group of the village headman A_2 remained behind in the old village."

622 578 689

This case illustrates the points that I have made. It shows how the two groups in this village stood opposed to each other in that B's sister wrote to tell him of A_2's conduct. Also when the village did break up it did so along certain very clear lines of genealogical relationship. Second, it illustrates the operation of the desire for dependence in that B refused when by Yao standards is a very large sum of money for compensation and preferred to move off and establish a village of his own. This attitude is also shown by the adjudicator who takes the point of view that regrettable as it is, the village must in the circumstances split, and while he appreciates the headman's feelings he makes it clear that the headman has no one to blame but himself. Third, it is interesting to note that this split took place after the death of the old village headman when the personal ties with both opposed groups were severed. Though the new village headman A_2 assumes the kinship terms of his predecessor and also calls the children of A_1 "children" yet in fact he is their cross-cousin while the old village headman was their father.

622 554 621

The position of the village headman in Yao social structure may be summarized thus: the village headman is the leader of a group which may be a simple kin-group or a composite group of two or more opposed matrilineages linked to each other through himself or one of his predecessors whom he represents to them. The numerical size of the village determines the status of the headman, but the size that it can reach is limited by an increasing instability in the kinship structure which is expressed, in terms of their status system, first, in the competition of headmen for the membership of the security-group, and second, in the competition between the headman and the members of the patrilineally linked security-groups, who wish to set up villages of their own.

621 881

The Yao are villagers as units and this is clearly shown at the initiation ceremonies of boys, when the initiates are kept in grass-sheds, each partition of which refers to a particular village. In the same way a person is identified as belonging to a particular village known by the name of the village headman. Thus a man might say: "I come from Kumpendo's village."

Sr Mitchell E-5 (1946-1948) 1949 FT7 Yao FT7

Village headmen themselves are graded in importance and there are certain marks of rank which distinguish the more important headmen. We have already mentioned one of the most obvious ways in which the village headman's importance is judged, that is, by the number of people in his village. In addition there are other ways in which village headmen may be distinguished both from the commoner people and from less important headmen. Thus, for example, some of the more important village headmen have the right to conduct initiation ceremonies, this right being granted to them by the man who is in a way the most important village headman of all—the Chief. The right to hold a boys' initiation ceremony (*lipando*) is of more importance than the right to hold a girls' initiation ceremony (*ciputo*). Yet another mark of rank is the right to wear a plain crimson band around the forehead (*mlangali*), this right also being granted by the Chief. 622 554 881

The Administration has recognized the more important village headmen and has entrusted to them certain duties. By no means all the people called "village headmen" in this paper are recognized as such by the Administration, but I do not know of any person who has the right to wear a red band and is not also an Administrative village headman. 622 554

The status system has apparently been taken over from pre-European days, but it is uncertain to what extent these important village headmen had powers. Some to-day have all the marks of rank that the Chief has, i.e., they hold both boys' and girls' initiation ceremonies, are entitled to the special greeting accorded to important village headmen (*mkulu*), wear a red band, have the right to be buried in the village and not in the commoner cemeteries, and to have their bodies prepared for interment by people of similar rank. It appears that such people exercised a certain amount of power, by reason of their personal qualities, over less powerful neighbours, and some were able in the past to demonstrate their autonomy by moving off to establish petty chiefdoms of their own.

Nowadays the Administrative village headmen have certain ceremony duties to perform towards other minor groups actually independent but considered, for the purposes of the Administration, to belong to the village. The relative importance of the headmen is still the deciding factor in such questions as determining who is to be called in to arbitrate in a case. Thus, though for Administrative purposes a small village may be considered to be a part of a larger Administrative village under an Administrative village headman, yet when a case for arbitration occurs within that smaller village, some other person than the Administrative village headman may be called in as arbitrator. 622 554 631 682

Laws promulgated by the Administration are conveyed through the Chief to the Administrative village headmen and in this way a hierarchy of power is being introduced. The small village headmen now see the Administrative village headmen as a representative of the Chief and the Administration. The Administrative village headmen in turn see the Chief in this light. But in matters directly affecting the Administration, the small village headmen also see the Administrative village headmen as his own representative *vis-à-vis* the Chief and the Administration. 622 631

In general the village is by far the most important corporate body in the social organization of the Yao, not only as a significant primary group but also as an element 621 622

in the political sphere. The position of the village headman therefore is of cardinal importance and merits further study.

III. THE FORT JAMESON NGONI

[P. 141 8]

(1) The people with whom this paper is concerned[1] occupy that part of Nyasaland between the Chikala Range in the South; Mount Mangoche in the North; the Shire River to the West; and the Portuguese East African border to the East. This area is represented on the accompanying diagrammatic map. A more detailed description of the general social organization of the Yao in this area, and of their history and general cultural background is to be published shortly.[2] At
36(this point it is sufficient to say that the Yao are semi-subsistence cultivators living in village settlements ranging from a few huts to sixty or more, with an average of about twelve. This represents say a population average of about 40 per village but ranging from 15 to over 200.
●(2) These village settlements are inhabited by groups
(1) of kinsmen. In general there is a matrilineal core
(2) of kinsmen of whom the village headman, who has the same name as the village, is one. In some more complex villages there are subsidiary matrilineages related to the matrilineal core agnatically

[P.141C]

(22) through one or other incumbent of the position
of village headman.[2] Succession to posts of author-
(21) ity, including that of the chief, is matrilineal.
(22) Ideally the succession should pass to the first-
born son of a man's eldest sister, but this is not
always followed, for the personal qualities of the
successor are more important.

(16) The total African population of the area studied
is 65,000. There are one or two Indian traders
and two Europeans permanently resident in
the area. One European is a missionary in the
north-east corner and the other an Agricultural
officer in the north centre of the area. Part of
(31) the area is administered by the District Commis-
sioner, Zomba, and part by District Commis-
sioner, Fort Johnston, and these officers tour
the districts under their jurisdiction. Occasionally
other White officials and labour recruiters appear,
but in the main, Whites are not often seen in this
(49) area. The one road traversing it is usually impas-
sable for a part of the rainy season.

563 to be initiated according to the Yao custom (*kpamde*). In general, the Nigaru headmen are village headmen in the same way as the Yao are and they follow the same pattern in political behaviour.

563 (2) At the moment, throughout the area, the various tribal groups live in kinship clusters as their under one Yao administrative headman there may be two or three unrelated Yao kin-groups and possibly one or two Nigaru groups living quite separately. Though the population in the area as a whole is mixed, usually the village groups are tribally homogeneous. So far little inter-marriage has taken place. I shall not here analyse this situation, though it is politically pregnant. In many ways the Nigaru immigrants [171] are more progressive than the Yao. Most Yao in this area are professed Moslems and do not attend the local schools which are Christian. However, the missions have been more successful among the Nigaru and they are becoming more educated and advanced. A good proportion of the Government posts in the area is filled by Nigaru for this reason. This is most significant in the context of the general situation as will become apparent in the description below. For the rest of the paper I shall consider the political structure as I see it, in terms of the social personalities in the structure, and the presence of these non-Yao groups is implicit in the rest of this analysis.

V. THE POLITICAL STRUCTURE

449 442 177 the Administration has persuaded the chief to pass and the full significance of which lies in a system of European values. These systems of values are foreign to each other in many features. Opposition between the two groups, White and Black, must arise if their behaviour is affected by different sets of values. The Yao, for example, believe that most deaths are caused by sorcery and claim the right to take punitive measures against the sorcerer. The Whites do not believe in this and prevent punitive action against people

1: Tew E-4 (no date) 1950 FT7 Tao FT7

every adult member is a matrilineal descendant of a single ancestress, or a spouse of one of these people. All husbands are called *alamu* by the male members of the descent group, but husbands call each other by the kinship terms for older and younger brother (*i.e. ambuwe* or *mpwanga*) according to the seniority of their wives. Similarly undifferentiated in kinship terms are the wives of all men of the descent group, who call each other 'sister'.

The husband is expected to work in his wife's garden, to help his mother-in-law, and also, in the early stages of marriage, to avoid her. His attitude to his father-in-law is one of respect, relaxing as time goes on. His attitude to his wife's brother is also one of respect, which covers feelings of latent hostility. Although husband and wife's brother co-operate in affairs relating to the woman and her children (e.g. they jointly consult the diviner in case of illness, and the brother-in-law hears grievances the husband may have against his wife), there are elements of conflict arising from their competition for the affection of the woman and her children.

Patrilocal marriages are the rule in certain cases. The village headman commonly has his wife in his own village. At his death his widow may return to her own village, but if her daughters have married locally she may stay, and one of her sons, as warden of his sisters, will also stay and marry patrilocally, as did his father, the headman. Thus a new matrilineal descent group, linked to that of the headman by a patrilineal link, develops. In every generation the number of separate but related matrilineal descent groups would double, and at such a rate of proliferation it might be expected that any village would contain many family groups. In fact, however, most members of a village can trace their descent from a common ancestress removed not more than about five generations. There are two reasons for this degree of homogeneity in the kin-grouping in the villages. One is that the villages tend to split up as they become too large and complex. The other is that the introduction of a new matrilineal descent group is often avoided by a cross-cousin marriage by the headman of the village or the warden of a minority group.

There is a joking relationship between cross-cousins, that is, for example, between the village headman's children and his sisters' children. The latter, as members of his descent group, have interests and loyalties opposed to those of his own children. Although there is a strong tradition of cross-cousin marriage, such marriages are said to be likely to be unstable.

Betrothal and Marriage

Child betrothal was common among the Yao. Acceptance of a loin-cloth and the wearing of it was taken of betrothal, giving the groom exclusive rights over the girl.[1] The negotiations for an adult marriage are conducted by senior matrilineal kinsmen of the parties, who at the subsequent ceremony act as witnesses or sponsors to the marriage. Usually the senior is the mother's brother, and the junior the brother. The act of validation, the *Chipanda* rite, takes place some time after the husband and wife have been living together. They meet in the hut of the woman for the rite, which consists in eating two pots of porridge, prepared by the female relatives of each party. The man's people bring a cockerel and the woman's a hen for relish. The exchange of food symbolizes the exchange of members of each matrilineal kin group, which is

[1] Duckworth, *ibid.*, vol. i, p. 108; Johnston, *ibid.*, pp. 410–13.

1: Tew E-4 (no date) 1950 FT7 Yao FT7

never to have had any large-scale central political organization, and their history is full of occasions when one group of Yao has attacked another. Even within his own area the authority of the chief was not, apparently, sufficiently strong to prevent one village headman from raiding his neighbours; the chief maintained no standing army.[1] The chief held certain rights and privileges. He was entitled to the ground tusk of any elephant found in his territory (the finder was rewarded after it had been sold, with a cloth); he received tribute in food,[2] with which he entertained visitors. He took a share of the spoils of war and was also entitled to annual labour service and to a gift when he made a new burial place. Apart from his military and judicial responsibilities, he had authority to settle when and where initiation ceremonies should be held.[3] The right to hold these ceremonies was sought after by the village headmen as a mark of status.[4] The chiefs or headmen of certain families had the right to wear a white cloth bound round their temples as insignia of rank.[5]

In addition the chief had a certain ritual status. He was thought to incur mystical danger by contact with death, and so was not allowed to attend a funeral nor to eat a chicken brought by a messenger announcing a death, nor to accompany his military expeditions. He was supposed to have great power through special medicines. He had to make offerings to the ancestors, especially in affairs concerning the whole people, such as drought or epidemic. He was expected to give a burial cloth at the death of an important man. At his death a period of social disorganization was recognized, members of his village were allowed to pillage and rape, until he was buried.

Succession to the chiefly office was matrilineal. The chief's position was based partly on his status as the senior male of his own matrilineal kin group, partly on his wealth. His command over slaves, guns, and carriers to the coast was greater than that of others, and from these his military strength was derived, for a chief was powerless without his following of dependants. The chief of the area was also headman of his own village. In fact, the position and duties of a village headman (except that he could not exact tribute)[6] reproduced in small scale those of the chief. The headmen also were in mystical danger through contact with death and were the channel through which the ancestors were approached in affairs concerning the village. They, too, built up their prestige and wealth by slaving activities. They seem to have been largely independent of the chief, carrying on slave raids of their own, and if they could gain a sufficient following, they might break away from the chief, and set up their own chiefdoms.[7]

The chief ruled through a hierarchy of headmen. His councillors were superior headmen, placed over a number of village headmen. Commoners could approach the chief only through the councillor in whose area their village belonged. The councillor's special duties were to report daily to the chief on the affairs of his district, to advise, and to arbitrate in the chief's own domestic affairs, e.g. in conflicts between the chief and his brothers and nephews. The councillors were not necessarily relatives of the chief,[8] but were chosen on account of their general status in the community, and their

[1] Elmslie, o. cit., p. 109, says of the Yao in the Shire highlands: 'Every south-east area was not subject to one chief . . . petty quarrels of petty chiefs were abundant. . . .' See Macdonald, cit., vol. i, pp. 189 and 190.

[2] Stannus, o. cit., says that only force was owed to him.

[3] Ibid., p. 270.

[4] Duff, op. cit., p. 310.

[5] Macdonald, cit., vol. i, p. 18; Watson, op. cit., p. 180.

[6] Macdonald, cit., vol. i, p. 193.

[7] Ibid., pp. 30 and 198.

[8] Ibid., p. 198.

1: Tew E-4 (no date) 1950 FT7 Yao FT7

office tended to become hereditary. Each councillor had his own village which he administered as a headman. A second set of officials were the court assessors, *mapolisa*, who, unlike the councillors, were not in charge of villages of their own in addition to their court duties. Their office was not hereditary and they were chosen for their wisdom and their debating ability. They lived at the court of the chief and their main duty was to sift the evidence in the judicial cases which came before him.

The village headmen were expected to send elephant tusks to the chief (receiving small gifts in return), and to invite him to a yearly beer drink. Like the chief, the village headman governed through a council of the most important men in his village. They constituted a kind of village court over which he presided, and in the old days he could give capital sentences, or award a fine of as many as four slaves. Appeal from his decision lay to the court of the superior headman, or to the chief. Important cases would be reported direct to the chief. Most crimes would be settled by compensation. In cases of murder, several slaves were paid to the kin of the victim, and a fine for spilling blood to the chief. When compensation was handed over, the recipient always returned some part of it as sign that friendship was restored.[1]

Macdonald's further account of the treatment of crime shows how weak was the political organization, in spite of the apparent orderliness of the system of inferior and superior courts. A murderer caught red-handed might be killed at once. If captured alive he might be ransomed on payment of a fine of from four to twenty slaves, some of whom might be killed to accompany the dead. If the murderer escaped a relative of his would be captured and ransomed. This applied to murders occurring among parties friendly to one another and living in the same village. If the murderer was from another village, the injured village, if strong enough, would fall upon the other and kill and enslave the inhabitants. If not strong enough, the chief might be called in to help to annihilate the guilty village.[2]

Modern Administration

In the whole of Nyasaland there must be between thirty and forty Yao chiefs. In the districts of Liwonde, Fort Johnston, and Zomba, where 60 per cent. of the Yao population is concentrated (1931 boundaries), there are at least fifteen such chiefs. Not all those who have the rank of chief in the old Yao system are recognized as Native Authorities or even as Sub-Native Authorities by the Nyasaland Administration, and many Sub-Native Authorities would be full chiefs in the Yao system, and quite independent of the Native Authorities under whom they are placed.

Nowadays the chief has lost many of his former claims to status. He no longer has monopoly of the trade to the coast, for goods are brought in by Indian traders and bought by African tobacco growers or returned labour migrants. He can no longer use his slaves to increase his wealth by running slaving expeditions. His tribute of food and ivory has ceased, and he can no longer entertain lavishly, but he is still expected to give burial cloths and to make gifts to headmen on their succession to office. Some of his councillors have been made court assessors, and are paid for those duties, but others are expected to work for him unpaid. Some chiefs do reward councillors who retain their traditional status but are not officially recognized as assessors by the

[1] Macdonald, *Africa*, vol. i, pp. 136-8; Swanson, n. 1970, p. 270.
[2] Macdonald, op. cit., pp. 139-1.

1: Tew E-4 (no date) 1950 FT7 Tao FT7

Administration, but many cannot afford to do this. The people regard the taxes they pay to the Administration as a substitute for the chief's tribute. As the Native Authority the chief appears to be responsible for tax-collection, as the tax-clerk lives at the court.

The chief is responsible to the Administration, among other things, for latrine construction and for punishing the infringement of various regulations. His main duties are judicial, as judge of the Native Authority Court. The bureaucracy attached to the Native Authority includes a number of functionaries, e.g. Kwinga's, in 1947 one of the larger courts, had 1 court clerk, 1 assistant court clerk, 1 community worker, 1 forest guard, 1 agricultural demonstrator, 1 sanitary inspector, 9 court messengers, 2 caretakers, 4 gaoler men, 1 market clerk, 1 market sweeper, 6 court assessors. These are paid by the Native Treasury. Court assessors help in the arbitration of cases. The key position at court is held by the court clerk, and usually he is not a Yao, but an Ngoni, who, because he is literate, is the medium of all written communications to and from the chief. The court sergeant is the correct channel of approach to the chief, and the court messengers represent the chief to the villages.

The territory of a Native Authority is divided into 'administrative villages', under officially recognized and paid headmen. Within these areas there are clusters of huts, which do not form officially recognized administrative units, but which are none the less villages under their own hereditary headmen. The administrative village headman is responsible for the payment of taxes in his area, and for the observance of various regulations. He is usually a man with some standing in the Yao social system: one who has the right to conduct a boys' initiation ceremony, or to wear the head-band signifying rank. His authority is derived partly from his status as a senior kinsman, partly from his status as a village headman. If the administrative village under him includes a number of hamlets unrelated to the administrative village headman, he will delegate his responsibilities in these hamlets to their own headmen. Consequently, since village headmen perform administrative duties, whether they are officially recognized or not, there is competition among them for the official posts. In order to bring pressure to bear on the chief to make him concede marks of rank, they may threaten to move out of his area, and so to deplete his following. In spite of this bargaining tool, the position of the village headman *vis-à-vis* the chief is said to be getting progressively weaker. Cases once tried by them are now being taken to the chief's court, and the latter is able to draw on the power of the Administration to establish his dominance over the headmen.

The chief in the modern system stands as the representative of the people to the white Administration, and as the representative of the white Administration to the people. One reason for the lack of direct contact between the Administration and the people is the fact that Yao is not the official language of the district, and therefore Yao interpreters are necessary.

There are some occasions when the chief and his officials perform the functions proper to their office under the old social system. The white Administration is not concerned with their ritual functions, nor with initiation rites, nor does it take cognizance of witchcraft offences. Accusations of witchcraft are judged by the same personnel as accusations of theft or adultery, but they are not dealt with in the court house, nor recorded in the book.

1: Tew E-4 (no date) 1950 FT7 Yao FT7

Land Tenure

The rules governing land tenure were those which would be expected of a society which suffered from no land shortage. A man was entitled to as much land as he could cultivate, the limitation being that he should consult the headman as to his neighbours' boundaries. Abandoned gardens could only be taken up with the permission of the original cultivator.[1]

MAIN CULTURAL FEATURES

Religion

The Yao are largely Islamized. Cadrington remarked that the propagation of this faith was distinctly antagonistic to British influence, and it received considerable attention from chiefs and headmen. Schools for the instruction of youth in reading and writing Swahili in Arabic characters were established in nearly every village, where also prayers were made at regular intervals in the day. The Moslem fasts and feasts were also observed, and the Yao were not inclined to embrace Christianity.[2] Their conversion to Islam did not take place till the nineteenth century, long after their first introduction to the Arab traders at Kilwa and Zanzibar, although they had adopted Swahili modes of dress much earlier.[3]

According to Hetherwick, Islam is strongest on the lake shore and on the east border of Nyasaland, chiefly round the old slave-trade centres. Makanjira's on the south-east side of the lake, and Domira Bay on the west, were the centres of Moslem propaganda. The Moslem population around Zomba and Blantyre consists mainly of Yao men, who have built themselves mosques in their own villages, or use the large mosques of Indian Moslem merchants. In the west districts, lower Shire, Ruo, central Shire, Liwonde, Fort Manning, the Moslem population does not total more than 750. In the districts round Fort Johnston and Karonga, the Moslems are one-ninth of the total population, while in Zomba district they number one-fifth.[4]

The Yao pagan religion was a form of ancestor worship. Apart from diviners and medicine men, there was no regular priestly profession. Intercession with the ancestors was performed by the chief, on behalf of the chiefdom, by the headman on behalf of the village, and by the head of the matrilineal kin for his dependents.[5] A man was qualified to approach his ancestors individually only if he had been initiated and had a house of his own.[6]

Some of the ritual duties of the chief have already been mentioned. When his people were visited by drought or epidemic, or when he fixed the day for the beginning of the millet harvest, he made an offering of flour and of beer poured into a pot in the ground at the grave of a dead chief. The village headmen made similar offerings to the spirit of his dead predecessor. The spirits of the dead Nyanja chiefs, ousted by the Yao invasion, were regarded as still powerful in the homeland of their people. For instance, Kangombe, whose shrine was on Mount Sochi, used to be appealed to for rain, and on the principle that the most appropriate mediator between a dead man and the living is a descendant of the former, the Yao chief, Kapeni, when he wished to propitiate

[1] Macdonald, Africa, vol. 1, pp. [illegible]; Sanderson, A., op. cit., p. [illegible].
[2] Cadrington, ibid., p. [illegible]; see also Stephen, A., ibid.
[3] Young, T. C., op. cit., p. [illegible].
[4] Hetherwick, op. cit., p. [illegible]; Sanderson, A., op. cit., p. [illegible].
[5] Hetherwick, op. cit., p. [illegible].
[6] Macdonald, Africa, vol. 1, p. [illegible].

Z: Mitchell E-5 (1946-1949) 1956 FT7 Yao FT7

soon erected. As early as 1895 the Protectorate was divided into Administrative divisions and Collectors were appointed in each. Coinage was issued; a hut tax of 3s. was introduced; European claims to land and mineral rights were settled with the chiefs—all large estates were issued with certificates of claim; and a postal system was initiated. The old order of independent chieftdoms had gone for good and the Africans had to adjust their way of living to a new order.

The Village as a Unit in pre-White Times

Though there are earlier records of villages among related tribes, the earliest we have of the Yao are those of Livingstone.[1] In the records of his journeys up the Shire and the Rovuma Rivers, he states that the people lived in villages. Rowley's reports[2] of the Shire Highlands in 1861 show that the Nyanja were organized in villages similar to those of to-day, but the best reports on the Yao village are by Duff MacDonald, who worked as a missionary in the Shire Highlands and the Zomba area from 1878 to 1881. Duff MacDonald published both a general ethnographic account of the Yao around Blantyre and a journal of day-to-day events on the mission. From these descriptions we are able to reconstruct much of the political organization of Yao groups before the Whites came to Nyasaland. Though the information from these early accounts about the internal structure of villages is scant, the reports of the importance of domestic slavery are good, and this is valuable in assessing its effect on the internal structure of modern Yao villages.

From MacDonald's description it appears that each Yao chieftdom was a congeries of almost autonomous villages. The headmen of these villages recognized the superiority of one of their number whom we may call "chief". The unity of each village and its corporateness were expressed in many ways. One of these was in connection with the worship of ancestor spirits. MacDonald writes:

> [The village headman] is the recognized high priest who presents prayers and offerings on behalf of all that live in his village. . . . It

[1] Livingstone, D. and C., *Narrative of an Expedition to the Zambesi and its Tributaries, and of the Discovery of Lakes Shirwa and Nyassa. 1858-64.* John Murray (London, 1865). Waller, *Last Journals.*

[2] Rowley, *The Story of the Universities Mission.*

2: Mitchell E-5 (1946-1949) 1956 FT7 Yao FT7

175 622 is his relatives that are the village gods. Everyone that lives in the village recognizes these gods but if anyone removes to another village he changes his gods. He now recognizes the gods of his new chief. One wishing to pray to the god (or gods) of any village naturally desires to have his prayers presented through the village chief, because the latter is nearly related to the village god, and may be expected to be better listened to than a stranger.[1]

In this quotation the word 'chief' is used for village headman. In Yao the same term is used for both the chief of the country and the chief of the village (*mwenye*).

It is clear from MacDonald's description that foreign villages were looked upon as undifferentiated wholes. When discussing punishment in general he writes:

175 672 681 682

We find that almost every offence may be punished by death, but when an offender is not redeemed, the particular punishment is left to the headman of the injured party. For instance, if a headman of Kumpama's go and say, 'Chenyono has killed a subject of mine; I have caught a subject of his and want to kill him,' the chief's answer will be, 'He has done you wrong, do according to your heart (*pole mtima wenu*).' The punishment is thus inflicted not by the criminal's own chief, but by the injured party, and it may fall, not on the guilty person, but on one connected with him.[2]

For example, he describes how some children had been carried off from Che Lomoni's village one night in 1880.

Towards the end of 1880 [he remarks], Che Lomoni, a Blateyre headman, captured two men from Mpingwi, and put them in dawsticks. They belonged to the village that had kidnapped the children a few months before, and native law did not require proof that the men were personally guilty. They were undoubtedly innocent. Still they were kept in close confinement till their friends returned the captives in February.[3]

175 622 The village headman—called the 'owner of the village' (*mwene mzi*)—was the representative of the village in all public transactions, and also the representative of such higher authority as existed, to the village members. Duff MacDonald writes: 'A chief represents and is responsible for all his people. If anyone wish to treat with a native village it is with the village

[1] MacDonald, *Africana*, i. 65.
[2] MacDonald, *Africana*, i. 181.
[3] MacDonald, *Africana*, ii. 234.

2: Mitchell E-5 (1946-1949) 1956 FT7 Yao FT7

chief that he must deal. If we give a present to a village it is to the village chief that we must give it'; and, 'It is when a man transgresses against his own village chief that *personal responsibility* is brought home to him. When he transgresses against another village, his own chief pays for him.'[1] The village headman accepted liability for offences committed by his villagers against members of other villages, but could punish his own villagers by fines and by putting them into slave-sticks. Within the village, according to MacDonald,

> The headman cannot make his villagers hoe his farm for him, or do such private work. Neither does he exact tribute from them. . . . Still he expects them not only to stand by him in war, but to support his government on all occasions, and to render special assistance in the trial of judicial cases. . . . He may pronounce a capital sentence, or order as large a penalty as the fine of four slaves—especially if he be a higher headman. But his judgements may be complained of by any of his free subjects (only such appeals are rare, unless by parties that want to leave his village altogether). His decision may be revised by some other headman, as the ruler of the village from which his own settlement broke off; but the ultimate appeal is to the chief of the country. While the village headman settles all smaller disputes without troubling the chief, he usually reports graver cases.[2]

The Chief and the Village Headmen: the Political Process

The village headmen in any particular area recognized the superiority of one of their number, the chief of the land (*ngwe ziamba*). MacDonald classifies the headmen under one chief as follows:

1. Chief's blood relatives, usually called 'younger brother'.
2a. Settlers or refugees (*zlambi*) who have come over with a large following from a hostile chief.
2b. Men who have gained the chief's favour by their services and been sent to occupy new spots in the kingdom.

'Other village headmen arise when a large village increases and sends forth smaller branches.'[3] All in the territory of a chief were integrated by a chain of authority. As he explains,

> 1. Headmen are under higher headmen and under the chief.

[1] MacDonald, *Africana*, i. 186. Original italics.
[2] MacDonald, *Africana*, i. 133. [3] MacDonald, *Africana*, i. 136.

2: Mitchell E-5 (1946-1949) 1956 FT7 Yao FT7

175 2. Free men are under their elder brother in the first instance, but
565 they may carry their cases to the headman of their village or
●622 even to the chief of the country.
643 3. Slaves were entirely under their own master.[1]

The headman's subservience to the chief is described in the following passage:

In all public transactions the headman represents his village. He receives the chief's orders and sees them carried out. When he kills an elephant he sends one of the tusks to the chief. Should he kill [651] twenty elephants he is not expected to give up twenty tusks—two or three would be sufficient. If he shoots a large buck he gives one haunch of venison. For all such tributes he expects to receive in return a present (generally a little powder). . . . He is expected to [646 attend the chief's parliaments unless he is under an elder brother in 913] which case he is not allowed to speak, except when especially commissioned. Headmen are expected to report all cases of war, but they often attack enemies without telling their chief beforehand, saying, [721] 'Let him hear of the enterprise when it succeeds.' Yet this is dangerous unless they are sure of success, and well acquainted with the chief's private sentiments. On reporting an attack they present the chief with part of the booty. In times of war each headman when summoned, must follow his chief's flag, otherwise his village is burned [647] down, and all that fail to escape are killed or enslaved.[2]

175 Yet within the framework of this organization villages were
578 markedly autonomous. MacDonald's description, which I have
622 just quoted, brings this out very well. Elsewhere he writes:
643 'The chief may often have less influence than powerful headmen, and we have known cases where he simply contented himself with grumbling when his headmen acted contrary to his desire.'[3] The chief did not differ greatly from his more powerful headmen. A certain amount of ritual in terms of ancestor worship embellished his position, and he had some ascendancy over village headmen to whom he had given land. Yet, in the last analysis, the chief had to rely on his personal following and military power to subjugate headmen who were becoming too powerful. The chief was therefore in direct competition with his subject village headmen, and involved in a constant struggle with them for followers. MacDonald describes how the chief himself was a

[1] MacDonald, *Africana*, i. 155.
[2] MacDonald, *Africana*, i. 155. [3] MacDonald, *Africana*, i. 155.

2: Mitchell E-5 (1946-1949) 1956 FT7 Yao FT7

village headman and had to administer his dawa and relatives in his village in the same way as a village headman.[1] MacDonald shrewdly observes:

175
578
622
643

Where the chief was occasion to interfere with his subordinates he generally consults his own interest. He will say to a headman, 'I see that you have been behaving badly to that subject of yours. You cannot get on with him: he must leave you and come and dwell in my own village.' The chief thus secures another servant.[2]

Another writer observed, 'As a chief's power consists of the number of his subjects the loss of a man is a serious matter.'[3]

175
622

A village headman also tried to strengthen his position against the chief and against other village headmen by attracting to himself as many followers and dependants as he could. The process whereby a man might increase his status is described as follows:

643
556
567

However large the settlement may become, the man that is first in the field is the chief or headman. In course of time he adorns his position by acquiring wealth. He may shoot some buck and get possession of their skins. With these he goes to the Mangoni country and buys slaves. An old person he obtains for a single skin, but a young slave costs two, and women cost much more than men. The female slaves thus bought are his junior wives and he keeps them busy in hoeing the farm, and all such female duties. The male slaves he employs in farming, building, making baskets, sewing garments and such masculine pursuits. He keeps all these persons strictly at their duties, and at the same time welcomes an opportunity of selling them as a profit. If his daughters were unmarried, he would give them slave-husbands. The natives aim at 'replenishing the earth and subduing it'. As it is no expense for them to rear families, they are all desirous to have many children.

Besides this increase of the village from the chief's own resources, there may be an accession of freemen. After the settlement is begun, a man may come to its founder and say, 'I wish to live with you.' The village chief gives him permission and calls him 'younger brother'. The newcomer brings his family, builds a house, and cultivates a farm in the same way as his chief. A freeman may leave his present chief and take up his abode with another, whose subject he becomes. His former chief has no longer any authority over him

175
622
691
643

[1] MacDonald, *Africana*, i. 134. [2] MacDonald, *Africana*, i. 133-4.
[3] Hynde, R. S., 'Among the Machinga People', *The Scottish Geographical Magazine*, viii (1892), 456-65.

2: Mitchell E-5 (1946-1949) 1956 FT7 Yao FT7

175 622 641 643 whatsoever. But a man often decamps by night taking with him many slaves belonging to his fellow-citizens; he then goes to some influential chief who may be only too glad to give the fugitive ground and to establish him as a sub-chief. Freemen who thus leave are detained by their former chief, who welcomes every opportunity of shooting or capturing them.[1]

175 554 622 643 641 In this way village headmen, by increasing their following, increased their power against the chief. MacDonald records:

When a person has acquired several villages, he becomes a higher headman, intermediate between the chief and the owner of a single village. Each headman lives in the village he likes best, and leaves his 'brothers' to manage his other villages. But a headman of great ambition often places his 'brothers' all around him, decides their cases, and practically governs a small kingdom of his own. If he lives far from his chief, one might suppose that he was quite independent. When a quarrel arises between the chief of the country and an important headman, the latter may rebel, and found a new kingdom, thus depriving the old chief perhaps of one-third of the villages in his dominions.[2]

MacDonald cites the case of Mkanda of Chiradzulu, who was at first a headman of KuMpama's but rebelled, and went to live on the southern side of the mountain.[3] He also observes that on the other hand, 'a headman may keep up his chief's authority in a district that the latter could not otherwise hold'.[4] Elsewhere he says:

In and around his own village the chief of the country is a terrible power, and his government is supported by the most prompt and severe punishments. But in distant parts of his dominions, where influential headmen live, he may be little known, although as a matter of theory he is supposed to settle all graver disputes even in remote villages.[5]

175 643 The history of the Yao chieftaincies in MacDonald's time, and as told to me by my informants, is that of constant division into independent chiefdoms. In the Zulu and Bemba polities a strong state structure included a pattern of civil war and the main-

[1] MacDonald, *Africana*, i. 147-8.
[2] MacDonald, *Africana*, i. 32.
[3] MacDonald, *Africana*, i. 157.
[4] MacDonald, *Africana*, i. 156-7.
[5] MacDonald, *Africana*, i. 154-5.

2: Mitchell E-5 (1946-1949) 1956 FT7 Yao FT7

tenance of the whole state under a new king,[1] but the Yao political units seem to have split into two factions when divisions appeared within them. The dissident faction left the parent chiefdom and established itself somewhere else as an independent entity.

The picture my informants have given me substantiates MacDonald's account, though his contact was mainly with Mangoche and not with Machinga Yao. My informants, however, placed greater emphasis than he did upon the importance of trade with the coast. A slave-trading trip was not a venture which the ordinary village headman could undertake with equanimity. The journey to the coast, to Quilimane or to Kilwa, was long and arduous, and strong military protection against bandits was needed. A caravan could only be sent by a chief or someone of like status, so that the coastal trade became the monopoly of the chiefs. Headmen who had ivory and slaves to send to the coast included them in the chief's caravan. When it returned, the headmen were able to collect calico and beads to the value of their contribution. Gun-powder also seems to have been a chief's monopoly. Thus, in fact, he did have some physical control over the military activities of his subject village headmen, since he could withhold supplies of gun-powder if he wished. But in a society where minor chieftains were inimically poised against each other, the maxim 'a chief without people is nothing' had much more significance than it has to-day: a village headman's ultimate sanction was that he could withdraw his support from one chief and give it to another.

The Effects of White Conquest

It was into a society thus organized that the first Missionaries came. I have already described how the Missionaries, by taking in runaway slaves, and by occasional armed combat, entered into political relationships with the chiefs. With the establishment of the Protectorate, the policy, clearly expressed in Sir Harry Johnston's letter,[2] was to stamp out slavery. This was done in numerous campaigns against the Yao chiefs[3] so that by

[1] See Gluckman, M., 'Succession and Civil War among the Bemba: An Exercise in Anthropological Theory', *Human Problems*, xvi (1954), 6-25.
[2] See *f.n.*, p. 29.
[3] See Chap. II, pp. 29-30.

2: Mitchell E-5 (1946-1949) 1956 FT7 Yao FT7

175 621 69

Under this Ordinance, the Administration provided first of all for the formation of 'villages'. A Rule made under Section 3 of the Ordinance and published in Gazette Notice No. 113 of 1913, gave the Resident the power to concentrate the native population, where necessary, into organised villages of not less than 20 huts and to disallow the erection of isolated huts. 'In order to give effect to this policy the erection of new huts was to be confined to existing villages, and the occupants of isolated huts were to be instructed to remove, as opportunity offered, to an approved village.'[1]

175 622 69

The Ordinance then proceeded to create a line of authority from the District Resident to the villagers through Village Headmen and Principal Headmen. Districts in the charge of Residents were divided into Administrative Sections. A Principal Headman was put in charge of each. The Sections in turn were sub-divided into Village areas (groups of villages), each in the charge of a Village Headman.

Under the Ordinance, Principal Headmen and Village Headmen were given specific duties and responsibilities in their respective areas. The Principal Headman, for example, was:

> to be responsible for the good order of his Administrative Section, the maintenance of discipline, the reporting of crime and the apprehension of criminals, sanitation, the control of the movement of cattle, reporting outbreaks of epidemic disease, and for any other matters in the interest of law and order and the general welfare of the native community.[2]

The Principal Headman was also to 'secure the attendance at the Magistrate's court of natives whose presence was required in connection with deceased estates, remittances, government labour and so on, and to exert his influence to accelerate the payment of hut and poll taxes'. These duties in turn devolved upon Village Headmen—they were responsible for their smaller areas as the Principal Headmen were responsible for the larger.

Unfortunately we have no information about the way in which Principal and Village Headmen were chosen. Murray records that

> Residents were not necessarily to recommend those natives who had hitherto been recognized as Chiefs or Headmen. It was considered

[1] Murray, *Handbook*, 132.

[2] Murray, *Handbook*, 130.

2: Mitchell E-5 (1946-1949) 1956 FT7 Yao FT7

that in some cases the previous records or age of such persons would be found to be such as to preclude their selection to transact the responsible duties of Headmen under the Ordinance, and in such circumstances Residents were to consider the claims of other natives of good standing, intelligence and reputation residing in the section, who, having assisted the Resident in native administrative matters in the past, might be expected to carry out the duties efficiently, and who, at the same time, were known to enjoy the confidence of the natives with whose supervision they were entrusted.[1]

Elsewhere Murray writes, 'The system introduced by the Ordinance was in no way intended to *revivify* or perpetuate government by native chiefs. The position of Principal Headmen under the Ordinance was in no sense to be similar to the archaic one of the chief.'[2] Yet in the area in which I worked it was precisely the traditional chiefs who were made Principal Headmen—Juluti, Nyambi, Kawinga, Liwonde and Malemia. In retrospect it is difficult to see how it could have been otherwise. Considering the sentiment attached to the chief in Yao society, it seems scarcely possible to conceive of leaders who 'enjoyed the confidence of the natives with whose supervision they were entrusted' who were not chiefs in the traditional sense.

In spite of its avowed intentions not to 'revivify or perpetuate government by native chiefs', the Administration proceeded to invest the traditional chiefs with its own power. 'Residents', Murray writes, 'were to indicate carefully by their attitude towards and dealings with Principal Headmen the fact that they were officially recognized as chiefs of their respective sections and that, as such, they were entitled to the respect and obedience of their people.'[3]

It would be wrong to imagine that the military actions at the end of the last century had completely destroyed chieftainship. Those who had resisted the Whites were driven out of British Territory but were allowed to return very soon afterwards. These chiefs then took up the threads of their life as best they could under the changed conditions. The degree to which the new Administration had become a force in Yao politics is illustrated by an entry in the District Book in Zomba. Kawinga III had died in August 1905, and the record reads: 'There were two

[1] Murray, *Handbook*, 131.
[2] Murray, *Handbook*, 130.
[3] Murray, *Handbook*, 130.

2: Mitchell E-5 (1946-1949) 1956 F77 Yao F77

175 claimants to the succession, Kamlomba and Chiwalo. Their
623 claims were really very equal and His Majesty's Commissioner
(April 1908) called in Kamlomba and the most important
645 headmen and decided the succession by their vote.' District
648 Books have many entries dating before 1912 showing that the Administration did not consider chiefs and village headmen insignificant.

The appointment of village headmen needed the approval of the Provincial Commissioner, but presumably the recommendation came from the District Resident. It is reasonable to suppose that the District Resident in turn had discussed appointments with the principal headmen. Whatever the mechanics of the appointment, however, the outcome was that most village headmen who held positions of prestige in the indigenous system of ranking became village headmen under the Ordinance.

The District Administration (Natives) Ordinance thus made official the unofficial relationship which had previously existed between the Administration and the chiefs and the village headmen. The traditional relationship of chief to village headman and village headman to villager, however, became suffused with a new significance. These relationships had become part and parcel of the extensive administrative organization of the British Empire.

The Modern Administrative Structure[1]

648 The Native Authority Ordinance of 1933 and the Native
692 Court's Ordinance provide the legislative framework for the
693 modern administrative system. Under Section 23(e) of the Native Authority Ordinance, the rules, orders, proclamations, notices and appointments made under the District Administration (Natives) Ordinance were not repealed. The duties which had so long been incumbent upon chiefs and village headmen, therefore, continued unaffected.

The chief, however, was set up at the centre of a bureaucracy and given autonomy in a number of directions. The Native Court's Ordinance gave him legal powers to inflict punishment on his subjects; the treasury under his authority could raise

[1] I have dealt in some detail with the position of the chief in the modern situation in my article 'Political Organization of the Yao of Southern Nyasaland'.

2: Mitchell E-5 (1946-1949) 1956 F77 Yao F77

crop failures. Also I was told that important village headmen are buried with their heads pointing to the east.

The Yao concept of the past is reflected in the principles of political organisation of these Machinga chieftdoms. The invasion is the datum point from which rank mainly stems. We may classify modern headmen into: those who were in the area before the Yao invasion, i.e. the Aborigines; the lowaters; and those who have come in since the invasion and have had to submit themselves to the Machinga chief, i.e. the Newcomers. The principle behind this classification of headmen is fundamental to Yao political structure. Stated most simply it is the rule that MacDonald quoted in describing the development of local organisation: 'However large the settlement may become the man that is first in is the chief or headman.'[1] This is, of course, somewhat of a simplification, but the rule contains the essence of the principle. It was reversed for the Aboriginal Nyanja because the Yao subjugated them. But the claims of the Nyanja chiefs to rank because they had occupied the land first were recognised by the Yao who absorbed them into the social structure in positions of high rank.

But the principle holds among the Yao themselves, and for the Ngoni in their movements after the White conquest. The operation of the principle is clearest in the structure of small local areas such as Chiwalo's. When Chiwalo's area was first settled, just after World War I, there were large tracts of unoccupied land. The first headmen to move into this region were Cigwaja, Kapalowa, Nyanja, Makata and Mambwa. The local chief Chiwalo followed Cigwaja, but as Cigwaja was one of the lowater headmen under Chiwalo during the period of invasion, he now recognised Chiwalo as the chief. The area that is now Chiwalo's chieftdom was divided out among these five headmen. As other headmen came into the area they had to approach one of these five for land rights. These, when granted, were granted irrevocably to a block to the new village headman who then had sole rights to distribute the land afterwards. If he had the land to spare, he may have granted a portion of it to yet another village headman, and this action was also irrevocable. The land occupation pattern in any particular area is therefore extremely complex, because in addition to the village garden areas, indivi-

[1] MacDonald, *Africana*, i, 147. See p. 55 above.

2: Mitchell E-5 (1946-1949) 1956 FT7 Tao FT7

deals may hold garden plots in other village areas which they have temporarily borrowed in a private arrangement with the individual owner. But when the system is seen in relation to the pattern of occupation of the area, it is greatly simplified. Each garden may be traced back to the original owner through three or four village headmen. The pattern of the reversion of rights follows the same system. The garden land of a village which has recently moved in and is moving out again reverts directly to the village headman who granted it. If he has moved out it reverts back to the village headman from whom it was in turn acquired.[1] These original landholders form the central points of locally organized areas to-day. For example, in Chiwale's area there is Chiwale at the top of the scale, then there are Kapulowa, Ciswaja, Mumbwa, Makata and Nyanje as the more important village headmen, and they take precedence over any of the other village headmen. All the others who have come into the area since then, of whom many are Nguru, rank very much lower.

From the smallest village to the chiefdom as a whole, therefore, there is a series of overlapping areas of organization. In any particular area chosen at random in a chiefdom as large as, say, Kawinga's, there will probably be two or three small villages which recognize the primacy of one of their number. The headman of this village may be called in to arbitrate in disputes over land or personal quarrels or even in the private consultations held after the death of a village member (*mapeto*). But the superior headman in turn recognizes *his* superior who was in the area before him. This system is extended over larger and larger areas, each headman in turn recognizing some other headman who was in the area before him, until ultimately the primacy of the invader chief over all his headmen is established by the same principle. There is no clear-cut district organization as among the Zulu and Bemba.[2]

[1] See also 'Preliminary Notes on Land Tenure and Agriculture among the Machinga Yao', *Human Problems*, 1 (1950), 1–13. This system of land-holding has been called 'centres of holding' by Gluckman. See his *Essays on Lozi Land and Royal Property*, Rhodes-Livingstone Paper, No. 10 (Livingstone, 1943), p. 29 ff.

[2] See the essays by Gluckman and Richards in Fortes, M., and Evans-Pritchard, E. E., *African Political Systems*, Oxford University Press for the International African Institute (London, 1940).

2: Mitchell E-5 (1946-1949) 1956 FT7 Yao FT7

554 These headmen who are the centres of local social structure
622 are the higher headmen that MacDonald mentions.[1] Many of
692 them to-day are the descendants of the traditional councillors (*ndona*) who were sent out to the extremities of the chiefdoms to be the outer governors in these areas.[2] Their villages are social centres in that many disputes are taken to these important headmen before they are taken to the Native Authority's court. For example, the dispute between the women of Nampeya and Cikwetu was taken to Ntilwilibwi.[3] The chief usually orders headmen to assemble at the villages of important headmen when he has directions to issue to them. Very frequently the Administrative officers camp there for the night on their tours and call
554 the headmen in to them for conference. The placing of mosques
622 at the villages of these important headmen also indicates their
346 significance as social centres. Most Moslem villages have small mosques which the more devout use for the morning and evening prayers during Ramadan only. At the villages of important headmen larger mosques have been built and these are used for the midday prayers on Fridays (*jumu*), when most of the Moslems in each area assemble in their best clothes for communal prayers. Large brick mosques have been built at the court villages of Jalasi, Liwonde and Kawinga. There are other large mosques at the villages of chiefteins such as Chiwalo, Chambo, Mpona, and of important headmen such as Kangomba, Nyenje and many others. These chiefs and headmen were all Invaders and are, as I shall show later, almost by definition Moslems. They are also headmen of high rank so that the placing of the mosque, and the other features of local social structure, are largely derivatives of the system of ranking.

554 Rank therefore underlies the structure of local areas as well as
622 the structure of the chiefdoms as wholes. It is, as I show later, closely associated with the historical origin of the headmen. Yet the correlation is not perfect and I shall show that other factors tend to militate against the fixed historical ranking of headmen. Nevertheless, the principle of primacy is the most important single factor.

[1] See Chap. II, p. 36.
[2] See Chap. IV, pp. 92-3.
[3] See Chap. V, p. 130.

2: Mitchell E-5 (1946-1949) 1956 FT7 Yao FT7

The Characteristics of the Three Categories of Headmen

In Table V I have set out the ethnic affiliation of the headmen in the three categories and also the dates of arrival of Newcomers in the Kwinga-Liwonde area. This table shows that

TABLE V

Numbers of Village Headmen who are Aborigines, Invaders and Newcomers

Tribes	Aborigines	Invaders	Newcomers							Total
			Before 1900	1900–1909	1910–1919	1920–1929	1930–1939	1940–1949	1950–1955	
Yao . . .	—	144	19	60	20	14	13	13	11	314
Mgoni . . .	—	33	—	43	21	9	1	1	—	108
Ngoni . . .	—	3	2	46	38	40	27	14	17	208
Nyanja . . .	25	3	1	4	6	1	1	4	1	46
Unascertained .	—	—	—	—	—	—	—	—	6	6
Total . . .	25	203	22	153	105	73	42	32	39	702

* In Ngoni area, 39 villages are classified as Invaders who came into Nyasaland as refugees from the Portuguese military actions at the close of the nineteenth century.

522
563
167

ously the great majority of villages has come into the area since the White conquest. On the other hand, only 3·5 per cent are Aborigines. Just over a quarter (28·6 per cent) are direct descendants of the original Invaders or headmen of villages which have branched off from these. The remainder (67·9 per cent) are the Newcomers who have submitted themselves to the Invaders. Far more Newcomers came in during the decade following the White conquest than in any of the more recent decades.[1] We cannot argue directly from these figures that the greatest influx of Newcomers into Nyasaland took place before World War I. Newcomers in the more recent decades may be as numerous but may be passing out of the area more quickly, and therefore are not recorded in my survey. On the other

[1] Ngoni immigration in 1908–27 was due to exceptional causes.

2: Mitchell E-5 (1946-1949) 1954 F'77 Yao F'77

(623 hand, all villages tend to disappear in time. We should there-
553 fore expect more of the headmen who came in during the
167 earlier decades to be forgotten, and the trend should be more pronounced than it is. In fact we know from other sources that immigration of the Nguru, who represent about one-half of the Newcomers, was greatest before 1930, and it is almost certain that the figures do reflect the change in the amount of Nguru immigration, and that the factors which may operate against the trend are not important. As a whole the set of figures suggests that immigration is slowly coming to an end.

623 The Aborigines are all Nyanja. Among the Invaders, 70·2 per
(4) cent are Yao, 25·9 per cent are Mpotola, and the remainder 3·9 per cent are Nyanja and Nguru. The Mpotola Invaders are practically all in the Ngokwe and Chikweo areas, so that in the other areas (i.e. in Liwonde, Kwinga, Chamba and Mpona) the Yao represent 94·9 per cent of the Invaders; the remainder are Mpotola. Under Ngokwe and Chikweo who are Mpotola chieftains, 54·5 per cent (48 of 88) of the Invaders are Mpotola, and 37·5 per cent are Yao, and the remaining 8·0 per cent are Nyanja and Nguru. Among the 486 Newcomers, 35·8 per cent of the headmen are Yao, 15·4 per cent Mpotola, 43·8 per cent Nguru and 4·9 per cent are mainly Nyanja. In general, therefore, we may say that the Aborigines are all Nyanja; the Invaders are Yao in the major area and Mpotola in the other area; and the Newcomers are predominantly Nguru from Portuguese East Africa, though there is a fair proportion of Yao who have come from other Nyasaland districts.

There are significant differences among the three categories of
622 headmen in their religious affiliations. In general there are more
715 Moslems (71·8 per cent) among all headmen than Christians or
717 Pagans. But there are more Moslems among the Invaders than among either the Aborigines or the Newcomers.[1] There are more Pagans among the Newcomers, but the proportion of Christians among the Aborigines and the Newcomers is about equal (25·0 per cent and 21·9 per cent). These differences in religious affiliations are consistent with the different historical backgrounds of the two groups. The Invaders are the descendants of the Yao slavers, who in the past had been in intimate

[1] Invaders = 91·1 per cent; Others = 63·9 per cent; Diff. of per cent = 27·2; S.E. of diff. = 3·7; C.R. = 7·2; $p < 0{\cdot}0001$.

2: Mitchell E-5 (1946-1949) 1956 FT7 Yao FT7

TABLE VI

RELATIVE AFFILIATION OF ANCIENTS, INVADERS AND NEWCOMERS MEMBERS

Religious Affiliation	Numbers			Total	Percentages			Total
	Ancients	Invaders	Newcomers		Ancients	Invaders	Newcomers	
Moslems . .	17	184	296	497	70·8	91·1	63·5	71·8
Pagans . .	1	4	68	73	4·2	2·0	14·6	10·6
Church of Scotland .	3	10	39	52	12·5	5·0	12·7	10·4
Roman Catholic .	2	1	21	24	8·3	0·5	7·1	3·5
Other Christians .	1	3	10	14	4·2	1·5	2·1	2·0
Total . .	24	202	466	692	100·0	100·0	100·0	100·0
Unknown .	1	3	20	24				
	25	205	486	716				

Combining Roman Catholic and other Christian totals.
$n = 4$; $p^2 = 36{\cdot}98$; $p < 0{\cdot}0000$.

contact with the Arab slave-traders and had taken over Islam from them. To-day the chiefs are still frequently called 'sultan'. All the chiefs in the Machinga area are Moslems except possibly the Malemia who was installed in 1947. He was brought up as a Christian but the strong Islamic tradition behind his status is reflected in the star and crescent on his ceremonial headdress. The Nyanja, however, were influenced by the Missions from the start and the Nguru were not as directly concerned in the slave-trade and were therefore less affected by Islam. They have been easily converted to Christianity. Among them too there are more Pagans. The difference in religion here is largely a reflex of the political relationships of the headmen. In other words, the Yao stoutly maintain that they are Moslems merely because Islam is one of the distinguishing marks of the Yao and of the Invaders in particular. It would be difficult for some of them to maintain their point in face of strict Moslems, for many of

2: Mitchell E-5 (1946-1949) 1956 FT7 Yao FT7

652 them follow the tenets of Islam in only the most cursory way.
795 An Ngoni therefore admits to being a Pagan more readily than
797 a Yao, because he cannot identify himself with the invading group.

Kinship with the Chief

692 The most important way in which the three categories differ,
693 however, is in the degree to which they are associated with the chief. While the invaders are identified with the chief because of their association with him in the invasion, they are also tied to him to a greater degree by various kinship links than the other categories of headmen.

Although the exact composition of the Invading groups will never be known, it appears from the accounts of old men, that the groups were made up primarily of the chief and his younger brothers, together with their sons and slaves, and some unrelated followers. Other chieftaincies and village headmen have sprung from the chief's lineage. For example, Kawinga was the leader who brought the present Kawinga-Liwonde group into Nyasaland. The first man to be called Kawinga left the Lujenda River where he was living with an elder relative called Nsanama, whose exact genealogical connection I have never been able to determine. Accompanying them was *Liwonde*, a younger brother of Kawinga. As they passed through the country just west of Lake Chiuta they encountered the Mpotola under Chikwen, and these joined up with Kawinga and his relatives and went to Kongwe on the west side of Lake Malombe (in the present Kalembo's area). From this place they were displaced by the Ngoni and returned east and south to the Chikala Range where they displaced Malemia and occupied the heights. Subsequently, Liwonde left the mountain and went to live on the Shire River where the old Government station used to be. From this point on, Kiawinga and Liwonde seem to have acted almost independently. Nsanama seems to have stayed with Kawinga. Chamba who was the son of the first Kawinga now set himself up as a chief on the south side of Chikala and Chaoni. Mposa, the son of the first Liwonde, moved to the shores of Lake Shirwa and set himself up there. Chiwalo, a sister's daughter's son of the first Kawinga, set himself up on the northern fringe of the area. Recently Stora, a sister's daughter's daughter's

2: Mitchell E-5 (1946-1949) 1956 FTT Yao FTT

daughter's son of the first Kawinga, has been recognized as a subordinate Native Authority. Village headmen also develop in the same way from the relatives of the chief. Among the 205 village headmen who are of Invader stock, there are 62 who are

TABLE VII

PROPORTIONS OF RELATED AND UNRELATED HEADMEN AMONG THE INVADERS

Chief's Relatives						Non-Relatives	Total
Direct			Clan				
Mat.*	Pat.	Aff.	Mat.†	Pat.	Aff.		
17 8·3	35 17·1	10 4·9	37 18·0	22 10·7	12 5·9	70 34·1	205 100%
30·3%			34·6%			34·1%	

* Includes the six chiefs themselves.
† Those who have the same clan-name.
Mat. = Matrilineally related; Pat. = Patrilineally related; Aff. = Affinally related.

either chiefs, their direct matrilineal relatives or their direct patrilateral relatives. This represents 30·3 per cent of the total. Of these 35 or 17·1 per cent are patrilateral relatives.

The chief's sons occupied a very strong position in the early Yao chiefdoms. Most sons of the early chiefs were their children by slave-wives. Since there was no one on their mother's side from whom they could inherit rank, it follows that they could only expect to achieve status through their father, the chief. Yet they were not, as his younger brothers and his sisters' sons were, a danger to him, because they were not in the line of succession and had no reason to wish his death. On the contrary, the bonds that unite father and son in Yao society are strong but not formal. The chief's sons, the *arilwana*, therefore came to occupy some of the most trusted positions under him. They became his military leaders; they led his caravans to the coast and back; they were the messengers who represented him to foreign chiefdoms and to the Whites when they came. In these positions the chief could trust his sons, because he knew that they

2: Mitchell R-5 (1946-1949) 1956 FT7 Yao FT7

had no hostile sons to grind. Younger brothers and sisters' sons might have used the military forces against him, or they might have squandered the wealth of the corvées because they had a jural right to it. As the sons grew older they were given groups of slaves and slave-wives to look after, and so they became village headmen under the chief. Many of them came to have initiation rights and hold other positions of importance.

The chief was also connected to other broader headmen through marriage. It is clear that affinal links become in time cognatic, but the marriage of the chief with a headman's sister fixes the relationship between that headman and the chief in perpetuity. The succeeding chief does not look upon the village headman who is his mother's brother's wife's brother as a father-in-law, as he would if he were a commoner, but instead calls him 'brother-in-law'. Also, all the successors of the village headman call all the succeeding chiefs by this term, so that the political structure of the area becomes phrased in a kinship idiom: the quasi-kinship of headman and chief in this context becomes suffused with political meaning. The number of village headmen who claim some affinal relationship to the chief is not great—only 10 of the total of 205 (i.e. 4·9 per cent).

TABLE VIII

PROPORTIONS OF RELATED AND UNRELATED HEADMEN AMONG THE NEWCOMERS

Chief's Relatives						Non-Relatives	Total
Direct			Clan				
Mat.	Pat.	Aff.	Mat.	Pat.	Aff.		
0	13	15	34	13	16	300	381
0	3·4	3·9	8·3	3·4	4·2	78·8	100%
7·3%			13·9%			78·8%	

Among the Aborigines and Newcomers, naturally, there are very few direct relatives. There are, of course, no matrilineal relatives. The patrilateral relatives amongst the Newcomers (3·4 per cent) are those of Kawinga who have moved into Chamba and Liwonde areas. There have been various mar-

2: Mitchell E-5 (1946-1949) 1956 FTT Yao FTT

stages between the chiefs and Newcomers and as a result there are 39 per cent of the Newcomer headmen who are linked affinally to the chiefs. The proportion of affinally-linked headmen in the two categories is approximately the same. The major differences are among the proportions of headmen linked by matrilineal and patrilateral ties to the chief.

Clansmen with the Chief

A more numerous category is those who are *related* to the chief, not by common descent but by clanship.

Informants tell me that before the Whites came to Nyasaland, each person took the clan-name of his mother. People who had the same clan-name were said to be "of one kind" (*lakeye lwane*). The word *lakeye* had no other meaning but "kind" or "sort", and the word *ninde* is frequently used as a synonym. If a man is asked his *lakeye*, he is as likely as not to give the reply "Yao" or "Machinga", i.e. his tribal origin. By extension it follows that if two people have the same clan-name inherited from their mothers, and their mothers in turn have inherited it from their mothers, and so on, eventually there must be a common ancestress. The two people therefore call each other "brother". However, among the Yao there are no stories of the origin of clans and only vague traditions of a common clan ancestress. I often questioned Yao about their clan-names and joked with them that though they were Invaders they shared the same clan-names as their subjects. The clan-names I found among the Machinga Yao were *apiri*, *amilati*, *ambewe*, *ahunda*, *ainduri*, *amwale*, *angone*, and these clan-names also appear among the Marawi group of tribes (Cewa, Manganja, Cipeta, Mbo, etc.), the Lakeside Tonga of Chinteche district, and the Mpotola and Lomwe or Nguru from Portuguese East Africa. The Achisi Yao under Katuli, a group related to the Mataka Yao from Portuguese East Africa, do not have these clan-names, nor, as far as I know do the Yao in Tanganyika. Clan-names, therefore, may be a feature of the Machinga Yao in Nyasaland, acquired as a result of their contact with the Marawi and other indigenous peoples of that country. It is significant that the clan-names are not as a rule common Yao words for everyday objects in the same way that clan-names amongst, say, the Bemba of Northern Rhodesia, are names of plants, animals and other natural phenomena. The word

2: Mitchell E-5 (1946-1949) 1956 FTT Yao FTT

632 *ambiri* is used for bamboos and once an informant when pressed
613 told me a tale of a group of people who in dire starvation ate
614 bamboo leaves and were thenceforth called after the bamboos. This story, however, was discredited by others and I pass it off as unimportant. There is, however, some evidence that the words *apiri ambiri, ambiri* and so on, are commonly used in Nyanja, and possibly amongst the Lakeside Tonga who were once part of the *Maravi* peoples, for objects other than clan-names.

614 Informants say that people with the same clan-name could not
582 marry in the past,[1] so that the clan appears to have had the characteristics of an exogamous descent group. The position to-day is vastly different. Not only do people take the clan-names of their fathers, but many young people do not even know their clan-names at all.

614 At this point I should make it clear that the modern confusion
611 about clan-names is no doubt partly due to the emphasis placed
587 on patrilineal descent by the purveyors of White culture, the Administrators and the Missionaries, and also by the same emphasis in Islamic tradition which has influenced most Yao groups. Another factor in the situation is that slave descent still markedly affects social relationships in modern Nyasaland. Its significance here is that when a man took a slave-wife in the old days, his children by her took his clan-name, and not hers. Patrilineal descent of the clan-name therefore tends to point to the slave origin of a person. People who are able to point to a freeman ancestry are proud of this fact and are proud to be able to claim a clan-name associated with a long line of matrilineal ancestors, particularly if there were some well-known men among them. On the other hand, I found it a fairly safe indication that, if I could find no information about an ancestress, particularly her clan-name, then I was dealing with a group descended from a slave. A third factor is that some people
614 explained their lack of knowledge of a clan-name by the state
611 of social unrest and confusion at the end of the last century. As a result of the incursions of the Ngoni, Ngura and slave-raiding Yao and Arab groups, and finally the punitive expeditions of the British and the Portuguese, villages were destroyed and groups annihilated. People lost contact with their relatives, even

[1] Confirmed by Hynde, R. S., 'Marriage and relationship among the Yao', *Nyasa News*, vii (1895), 217-18.

2: Mitchell E-5 (1946-1949) 1956 FT7 Yao FT7

their parents. Therefore many people who were children then, but adults to-day, say that their parents were 'last running from the wars' and that they were never told their clan-names.

Whatever are the factors which have led to the comparative lack of importance of the clan-name in the social relationships of commoners to-day, the clan-name has preserved its significance in the political structure. I have already said that the clan-names associated with particular village headmanships and chieftaincies are well remembered, and this fact is not without significance. It seems likely that the clan-name was used in earlier times by groups as a method of claiming protection. The same set of clan-names appears throughout the tribes which surround the Machinga Yao. It seems likely that the adoption of clan-names facilitated their incursion into the country, and it is certain that immigrant Yao groups have used the clan-name as excuses to move into an area, and gradually to extend their dominance over it.

For example, in Malemia's area there is an Nyanja village headman called Nyani, who has the clan-name *amwale*. Stannus reports that when Malemia moved into this area he claimed brotherhood with Nyani because of the clan-name, and was able to obtain from him the land extending from the Likwenu River to the Namadzi River, a district 30 to 40 miles long.[1] Again when Kawinga fled from Chikala after the British raids on it, he went to the land of Nkanyela, an Mpondo chief in Portuguese East Africa, who is also an *amlewe*. That the clan-name is used essentially in this political field is illustrated by the relationships of Mpona to Mbande. Mpona, the son of Kawinga I, settled in the country of the Nyanja chief Mbande, who had the same clan-name as Mpona, viz. *amlani*. Mpona calls Mbande 'brother' to-day and Mbande holds a position of honour and rank in Mpona's chiefdom. It is significant that other village headmen such as Cilombo, Mbalika and Mkwinda also have the same clan-name, but they do not claim kinship to Mpona. In modern times, when there is no longer any great danger to be incurred in moving from one part of the country to another, it seems likely that the necessity for some mechanism, whereby true friendship of otherwise hostile groups could be secured, falls away. In other words, the significance of the clan-name is gradually disappearing as its functions atrophy.

[1] Stannus, 'The Wayao of Nyasaland', 237.

2: Mitchell E-5 (1946-1949) 1956 FT7 Yao FT7

619 Relationship may be claimed not only through having the
601 same clan-name, but also by patrilateral and affinal clan ties. For example, one of the early Kawinga is supposed to have married an *ahanda* woman. Therefore Chikwere, whose clan-name is *ahanda*, calls Kawinga 'brother-in-law' (*alamu*). Some of Kawinga's village headmen also call him brother-in-law because of the clan-name. Ngukwe, whose clan-name is *ainbiri*, had an *ainbiri* father, so that many of his *ainbiri* headmen call him 'son'.

619 Here, as before, there are more Invader headmen who claim
622 to be clan relatives of the chief (34·6 per cent) than Newcomer
643 headmen (13·9 per cent) (see Tables VII and VIII). Once again the proportion of headmen who claim affinal links to the chief is approximately the same in the two categories and the main difference is in the proportions who have the same clan-name and who are clan-patrilateral relatives in the way I have explained. I have mentioned that though many headmen have the same clan-names as the chiefs or the clan-names of the chiefs' fathers, they do not all claim to be clan-relatives of the chief. There is no reason to suppose that the distribution of clan-members is different between the Invaders and Newcomers, so that it seems likely that more Invaders claim the clan-relationship to the chief when they can, than do Newcomers.

Unrelated Headmen

622 The striking difference between the two main groups of head-
643 men is in the proportion not related to the chief. Among the Invaders only 35·1 per cent of the headmen cannot claim some kinship link to the chief. Among the Newcomers, however, roughly double that proportion (78·8 per cent) are in this position. Among the Invaders some of the unrelated headmen hold positions of importance by virtue of their independence of the chief. These are the *salusa* whose functions I describe later.[1] Among the Newcomers, however, there are no *salusa*, so that this difference between the categories is one of the most important.

In Tables VII and VIII I have omitted a total of 105 villages, 93 of which were small villages whose relationship to the chief I did not record. All these villages were settled in distant and inaccessible places and I asked about them from the chiefs and

[1] Chap. IV, pp. 92–3.

2: Mitchell E-5 (1946-1949) 1956 FT7 Yao FT7

their councillors at the courts. If they were relatives of the chief it is almost certain that he would have mentioned them. We may assume then that the true proportion of unrelated headmen among the Newcomers is, as we would expect, very much greater than among the Invaders. 622 643

Of the total of 424 Administrative villages there were ten in which I did not record the formal relationship to the chief. In Table IX I set out the proportions in these categories among the Administrative village headmen, and there is no radical difference between these proportions and those for all village headmen. 622 643 602

TABLE IX

PROPORTIONS OF RELATIVES AND NON-RELATIVES AMONG ADMINISTRATIVE HEADMEN*

	Chief's Relatives						Non-Relatives	Total
	Direct			Clan				
	Mat.	Pat.	Aff.	Mat.	Pat.	Aff.		
Invaders . .	18 (13·2)	23 (16·9)	6 (4·4)	24 (17·6)	11 (8·1)	9 (6·6)	45 (33·1)	136 (100·0%)
Newcomers .	0 (0·0)	8 (3·3)	12 (4·7)	20 (7·8)	11 (4·3)	12 (4·7)	193 (75·1)	257† (100·1%)
Total . .	18	31	18	44	22	21	238	393

$n = 6$; $\chi^2 = 90{\cdot}5$; $p = 0{\cdot}0001$.

* This table includes the 21 Aborigines.

† Excludes 10 villages for which I have not recorded this information.

To summarize, we may characterize the Invaders as Yao, Moslems, and associates of their chiefs by historical connections and kinship ties. The Newcomers and the Aborigines on the other hand are of different tribes. They have more diverse religions, are not connected to the chiefs by kinship ties as closely as the Invaders are, and do not share with them the strong bond of being co-Invaders. It is in the struggle for prestige and rank that these bonds with the chiefs assume significance. 622 643 602 563 554

2: Mitchell E-5 (1946-1949) 1956 FT7 Yao FT7

CHAPTER IV

PRESTIGE AND RANK AMONG THE VILLAGE HEADMEN

The Political Process as the Struggle of Headmen for Rank

622
554

THUS far I have been describing the composition of the three categories of headmen: the Aborigines, the Invaders and the Newcomers. This classification is fundamental to the system of ranking among them, and is the most important single factor. But rank among village headmen is determined by other factors as well. We may summarize the most important of these thus:

A. *Rank from association with the chief.*
   1. Accompanied the chief during the Invasion.
   2. Kinship with the chief.

B. *Rank from opposition to the chief.*
   1. Prestige from another area.
   2. Large following.

The struggle of the headmen for power and prestige, both among themselves and against the chief, constitutes the political process. This is expressed mainly in the competition for various symbols of prestige. In this process, village headmen may use whatever connection with the chief they can, in order to gain his favour. They may use their direct kinship or clanship with him, or some more nebulous connection, such as the friendship of their fathers with him, or they may play upon the history of the association of their village with his ancestors in the invasion of the country. If they cannot exploit some link with the chief in their struggle for prestige, they may press their claims on the basis that their villages are large, and that if they are frustrated they may move their allegiance to another chief.

The historical fact of being of Invader stock is clearly a major determinant of rank. Invaders always have the advantage over the Newcomers because of their historical association with the chief. They are more closely bound to him: they participate

2: Mitchell E-5 (1946-1949) 1956 FT7 Yao FT7

in the ritual of the chieftaincy more than Newcomers do; provide the chief's councillors; pay rain-levies and in other ways express their closer tie with him. But there is no rigid class structure based on tradition. All villages are liable to break up. If for any reason the village's internal cohesion begins to weaken, its members scatter and it disappears as a political entity. Invader as well as Newcomer villages may thus disintegrate. The smaller sections of an Invader village which now set up villages of their own have to compete with the larger and more united villages of Newcomer origin. Another facet of the political process, therefore, is the continual competition of village headmen who are trying to maintain the unity of the villages under them, and to increase their following, so that their status against the chief and the other village headmen may be enhanced.

Marks of Rank

In the vernacular it is the *name* of the village which is said to be important.[1] This name is usually taken from the founder of the village and is assumed by a new village headman when he succeeds to the position: when a new village is founded the headman gives it his name to distinguish it from the parent village. But the importance that is ascribed to a name is clearly the importance of the corporate group which it represents. The headman is an incumbent of a social status, the prestige of which is drawn from the corporate group which he represents in his public dealings.

The prestige of village headmen is shown particularly in the degree of deference accorded to them by other village headmen. The headman with the highest prestige is of course the chief: the original leader of the Invaders. Below him may be ranked the rest of the village headmen in a relatively fixed pyramidal hierarchy, determined by a number of factors which I shall outline later.

The dress of important headmen is often an indicator of prestige but this criterion is not infallible nowadays when labour migrants, craftsmen and tobacco growers can afford to buy better clothes than many headmen. But it is usually a fairly safe guess that when a man carries a long stick and is dressed in long flowing

[1] *Lina lya kulungwa*—lit. 'the name is great'.

2: Mitchell E-5 (1946-1949) 1956 FT7 Yao FT7

622 554 292 robes (a gown not unlike a woman's dressing-gown), wears a bright-coloured turban, and has one or two men walking behind him, he is a rather important village headman. One particular item of clothing in the Kawinga, Liwonde and Nyambi areas, is the scarlet headband which some village headmen may wear. I shall discuss this later in the context of the competition of village headmen for rank.

622 554 411 Another external characteristic of rank, which seems to have disappeared with the changing economic structure of Nyasaland, was the carrying of knives (*nsinjo*) by important village headmen. Previously, status was indicated by the type and size of knife carried in public. The chief usually carried the largest and most ornate. The knife taken from Kawinga on his surrender in Portuguese East Africa was about 18 inches long and had a decorated ivory handle. Smaller knives of similar pattern belonged to his headmen.[1] Nowadays, many young commoners carry knives two or even three feet long, made from the broken blades of motor-car springs.

622 554 351 [567] The right of important village headmen to build fences[2] at the back of their huts is also a mark of prestige which seems to have lost its significance. About 50 years ago only important headmen had the right to erect a fence at the back of their huts. This fence, made of tall grass about six feet high, enclosed the grain stores and other food supplies of the household and formed a private compound in which the headman's wife and slaves carried on their daily tasks.[3] It seems likely that private compounds and slavery were positively associated, so that only the important village headmen who had many slaves found it necessary to build fences. All chiefs and most important headmen to-day still erect these fences. Those who hold initiation [881] rights are obliged to build them because, when the initiands return from the seclusion phase of the initiation ceremony, they are supposed to spend one night in the headman's private compound before going back to their villages. But nowadays, minor village headmen and commoners also frequently build these

[1] See f.n. 4, Chap. II, p. 38.

[2] *Lusenje*, pl. *ndenje*. The enclosed space or 'compound' is *cimbundi*. Typical hut compounds are depicted on Plate IX (*a*) and (*b*), facing p. 206.

[3] MacDonald suggests that the common term *kuyeto* for woman is derived from the adverb *kuyeto*—on the other side (of the fence).

2: Mitchell E-5 (1946-1949) 1956 FT7 Yao FT7

compounds, especially in areas where there are man-eating lions,[1] so that it is no longer an infallible indicator of the hut-owner's rank.

Minor village headmen always allow their superiors to sit on a chair. If village headmen of commensurate status are present, chairs may be sought for them all. But a minor village headman never occupies a chair, even if one is available, in the presence of his superior. At a meeting, for example, a chief occupies a chair and so may his most important *nduna* or councillor. The more important headmen sit alone on separate mats, for a man only shares a mat with his equals, and then only rarely. Junior headmen, however many there are, have to try to squeeze themselves on to one mat or squat on the ground.

Important headmen also have the right of walking in front of their juniors. If there are three or four headmen returning from, say, a court case, they arrange themselves in the pathway in an order which reflects their rank. As they file down the narrow field paths the leader is the most senior among the group. After him come the other headmen and last of all the commoners. This order of precedence is also followed when initiands pass through the tribal initiation ceremonies. The sisters' sons and other matrilineal descendants of important headmen precede those of the less important headmen. At Chiwalo's hut also, I have noticed that the more important headmen sit under the verandah while listening to private cases. The less important headmen sit with the commoners under a shelter or out in the sun.

I have been discussing the visible marks of prestige. But high rank also tends to carry with it some other privileges which are not immediately observable. The most obvious is Government recognition. I have already mentioned that under the 1912 Ordinance, village headmen were recognized by the Administration. These Administrative village headmen, who had certain duties to perform, were paid a small annuity and were in earlier days given a 'book' in which the tax payments could be recorded. To-day, the Yao still describe Government recognition as 'having a book'. Administrative village headmen derived more benefit from Government recognition than merely an

[1] The huts in Plate IX (*a*) and (*b*) are in Namwera area where there are man-eating lions. Most huts have compounds. A large proportion of huts in areas where there are no lions also have compounds.

2: Mitchell E-5 (1946-1949) 1956 FT7 Yao FT7

622 554 648 annuity. This recognition publicly announced their superior status, because not all headmen could be Administrative headmen. We do not know exactly how the Administrative headmen were appointed when the Ordinance was introduced. The observable results, however, are that no headman, as far as I am aware, who was of superior status in the indigenous ranking system, is not an Administrative headman to-day. Being an Administrative headman is then in itself an indicator of rank.

622 554 643 415 769 881 Rather more important than this is the right to hold initiation ceremonies. MacDonald says that these rights were held by the chief only, but it is not clear whether the word 'chief' used here refers to the village headmen or the 'chief of the land'. Nowadays, the rights are held by village headmen as well as the chief. The right to hold initiation ceremonies is signified by the possession of a small flat basket (*ciselo*) in which the oblational flour for the ceremonies is carried. When a chief grants a *ciselo* or oblational basket to a village headman, what in fact he does is to grant him permission to approach the spirits of his ancestors. The headman uses the basket on three occasions during the initiation ceremonies. First, before the ceremony is announced he pours a little cone of sorghum meal at the root of a special tree in or near the village. This tree is known as the *nsolo*, or the shrine-tree where all offerings to the ancestors are made. While he works the flour through his fingers to allow it to fall in a cone, he calls on his ancestral spirits and asks them to intercede on his behalf with the spirits of the chief's ancestors. He then formally requests permission to hold the initiation ceremony. This cone is left intact through the night. Should it collapse the interpretation is that the spirits are not willing that the ceremony should take place and it is postponed for some days. Offerings are made until eventually the cone, by remaining intact through the night, indicates that all is propitious for the ceremony to be conducted. The second occasion when the oblational basket is used is when the village headman or chief goes down to the grass sheds where the rites of segregation and aggregation take place. Here he pours flour over a twig and begs the safe conduct of the initiands through this physically and mystically dangerous period. Third, each individual initiand, and his or her mother, is touched on the forehead and forearm with the flour on the evening that the initiands leave for the grass sheds. During

2: Mitchell E-5 (1946-1949) 1956 FT7 Yao FT7

the last rite the owner of the oblational basket exacts a payment of threepence or so from each parent. The headman does gain financially from the initiation ceremony, but it would be wrong to imagine that this is the only reason why he should want to have the right to hold it. The competition for the rights, which are limited to a few, is part of the general political process whereby village headmen compete for privileges and advantages over their fellows.

Village headmen may hold either the boys' or the girls' initiation ceremonies, or both. Sometimes, when they hold both, they delegate the girls' ceremony to a younger brother or some other relative without referring to the chief. For example, Kawinga's clan relative and important retainer, Ngalawanga, had the rights to both initiation ceremonies, and he allowed his perpetual 'son' Isa [1] to hold the girls'. Also in Nyambi area, Majaja, who had both initiation rights, allowed his perpetual 'son' Nantunga to have the girls' ceremony. It is generally conceded that the right to hold the boys' initiation ceremonies is more valuable than the right to hold the girls'. H. L. Duff, writing in 1906, had also noticed this when he wrote:

> The respective ceremonies seem to be considered as on a somewhat different footing, for the boys' *inyago* can properly be held only at the village and under the patronage of, so to say, the paramount chief of the neighbourhood, whereas the girls' initiation may take place under the auspices of an inferior headman. This distinction is still jealously observed and any breach of the chief's privileges is apt to lead to bitter dispute.[2]

The sanction the chief holds over the headmen in this respect is mystical. A village headman believes that the initiation will be a success (that is, that the initiands will be free from the harm of wild beasts and illness, or the circumcision wounds of the boys will heal quickly and well), only if the approval of the chief's ancestors is obtained. He cannot hold the initiation ceremonies, unless he has obtained the basket from the chief.

Most people still follow tribal initiation customs, but in the extremes of the area in which I worked, religious ideas are bringing about a change. In the north in Jalasi's area where Islam

[1] The first Isa was the son of Ngalawanga and this relationship is preserved by the modern incumbents of the headmanships. See Chap. V, p. 122.

[2] Duff, H. L., *Nyasaland under the Foreign Office* (London, 1906), 312.

881 is most powerful, there is a tendency for the Islamic initiation
178 ceremony for boys, *jandu*, and the Islamic initiation ceremony
795 for girls, *nsondo*, to displace the tribal equivalents, *lupanda* and
●622 *ciputu*. These Moslem initiations are conducted by Moslem
554 teachers (*mwalimu*) and are not controlled by the chief. Though it also involves the circumcision of the boys, *jandu* is very much shorter and the boys are secluded for only a week. Some say it is becoming more popular because it is less expensive for the boys' parents. In Chiwalo's area the two ceremonies are run concurrently. The boys and girls go through the normal segregation rites at the beginning of the ceremony, but an *mwalimu* circumcises the boys according to Islamic practice. At the aggregation rites at the end of the period of seclusion, the star and crescent appears as one of the symbols along with the whale (*namungumi*), antelope (*mbalapi*), leopard (*cisuwi*), and the other tribal effigies which are shown to the boys. Christianity in the south has had a similar effect. The Missions actively discouraged initiation ceremonies in the past. Many of the people in Mposa's and Malemia's area have dropped the custom, or have integrated prayers and other parts of Christian ritual into the ceremonies, though circumcision is steadfastly retained. The effect of these changes is that the important ritual control the chief had over the ceremony has been undermined, and so the prestige attached to it has also begun to fade in these areas. What I describe about the prestige of village headmen and the rights they have to initiation ceremonies is only partially true, and is falling away daily. The correlation I seek to establish is also disturbed by the fact that among the Nguru there is a slightly different initiation ceremony (*cidodoto*) for boys. Most Nguru send their boys to the Yao initiations but there are still some who hold their own traditional ceremonies. These are not within the mystical control of the chief so that some Nguru headmen are outside the competition for the initiation rights. I should say, however, that most compete with the Yao for Yao initiation rights so that this factor is not as disturbing as appears at first sight. In addition, village headmen who move into a new area usually must obtain the permission of the chief before they may use the initiation rights they held before coming into the area.

622 There are other indicators of the general high rank of village
554 headmen. Junior headmen, like commoners, must give a special
576

2: Mitchell E-5 (1946-1949) 1956 FT7 Yao FT7

Arabic greeting to their seniors. This is done by placing the 622
left hand on the chest and bending slightly forward to the village 554
headman, saying, '*Subaye*'. The senior should then respond, 576
'*Alaye*'. Also, important headmen are usually buried in the
centre of the village, not in the common graveyard. The tomb 766
of an important headman or personage, usually built of stones, concrete or brick, is called *nsati*. The right to bury in the village must be obtained from the chief 'because the land is his', and in Kawinga's area a fee of 6*s*. must be paid to him.

The Struggle for Government Recognition

Thus far, I have been discussing the ways in which the rank of 622
village headmen may be expressed. I now describe the way in 554
which these marks of prestige are associated in the three cate- 643
gories of headmen we have distinguished, and in what way the
competition between them is phrased. I have already described 648
how all the chiefs in the areas to which I am referring are all successors of the original leaders of the invasions, and are usually the present Government representatives or Native Authorities.

The people must recognize the rank of chief because mystical beliefs prescribe activities in one direction, and because the limiting structure of the White Administration does so in another. A village headman cannot hold initiation ceremonies without the permission of the chief because of the mystical sanction, but the chief also has legal authority over his subject headmen. He as Native Authority is recognized by the Government and is its representative to his people. The Native Authority Ordinance (1933) specifically imposes penalties on those who do not recognize the authority of the chief. Under Section 12 of the Ordinance, the Native Authority may arrest without warrant any person who is accused of failing to obey his order or direction, interferes with his lawful duties, professes to be a chief or assumes the duties of a chief without Government approval. Under Section 13(*i*) severe penalties are imposed on any person who conspires against or in any way attempts to undermine the lawful power and authority of any chief or Native Authority. His position is therefore greatly strengthened against the village headmen and I have been told of one or two prosecutions by chiefs under this section. Nowadays, the mere threat of

622 643 554 648 action under this Ordinance is sufficient to cow his opponents. Therefore, the chief may also control the rise to power of his headmen because he is a Government official. At the same time a village headman may not move away to form a chieftaincy of his own: should he migrate with his followers nowadays, he will always find himself under a White system of Administration which upholds some other chief against him. The rank system must operate within a circumscribed framework and in reference to the chiefs.

622 554 648 I have already mentioned that being an Administrative village headman is a mark of prestige. Most of the struggle for rank revolves around this axis. Under the 1912 Ordinance, village headmen were only recognized if they had at least 20 taxable huts under them and they were paid a small annuity proportionate to the number of their taxable huts.[1] Before a headman could be recognized, therefore, he had to gather around him at least 20 tax-payers. After a headman had been recognized, the more villagers he could attract the higher his annuity. This situation is one with which the Yao headmen were long familiar. It is indeed the same process that went on before the Whites came, and that was outlined so clearly by Duff MacDonald, except that it is now cast in slightly different form. In consonance with the new money economy, superior status, marked by more dependants, brings a higher financial reward. But it would be false to imagine that the prospect of financial gain is the only spur to a village headman's attempts to enlarge his following. A headman of a large village as such, is still a 'big' village headman.

622 643 554 648 A headman who has sufficient followers to enable him to press a claim for a 'book' goes to the chief for it. The chief considers the merits of the case, but is unwilling to grant too many 'books' in his area. If he supports the claim the matter is referred to the District Commissioner, who considers the application, not in terms of the indigenous struggle for rank, but in terms of general Administrative considerations, such as finance,

[1] A definite rate of remuneration was fixed in 1918: it was computed at 10*s.* for every 300 taxes. See Murray, *Handbook*, 142. Under the 1933 Ordinance the remuneration was fixed at 4*d.* per Government tax of 6*s.* to a village headman and 2*d.* per 6*s.* to a Native Authority. *Report on Native Affairs for the Year Ended 31st December 1933*, Government Printer (Zomba, 1934), p. 5.

2: Mitchell E-5 (1946-1949) 1956 FT7 Yao FT7

and the ease of administering groups with centralized authority. 622
If he agrees, the necessary alteration is made in the tax-registers, 643
and the new Administrative headman is paid his annuity and is 554
called up by the District Commissioner whenever he holds a 648
meeting. To the District Commissioner the chiefdom is made up of the villages on the tax-register, and in a situation of political importance he calls on the headmen of those villages for decisions. For example, when a chief was being installed, the District Commissioner called each Administrative headman forward and asked him whether he agreed to the succession. When the District Commissioner wishes to discuss any matter with a villager he calls forward the Administrative headman. The position of village headmen in the political structure becomes more effective after they have been recognized by Government.

I have no accurate measure of the proportion of all village 622
headmen who are recognized by Government. From my 648
records the percentage of Administrative village headmen out 554
of the total of recognized village headmen is:

	No. Admin. Villages	% of Total recognized
Kawinga	160	84
Liwonde	104	71
Mposa	30	48
Chikweo	48	43
Ngokwe	21	40
Chamba	61	39

I have full records for the smaller chiefdoms, Mposa, Chikweo, Ngokwe and Chamba, but I know for certain that the figures for Kawinga and Liwonde are incomplete. My fullest and most reliable records are for Ngokwe and Chikweo, so that we may estimate roughly that less than half of the village headmen are Administrative village headmen.

Naturally the village headman, whose taxable population will 622
be reduced by the granting of a new 'book', opposes this in the 554
same way as his ancestor opposed the emigration of his village 691
members in pre-White days. In 1947, in Jalasi's area for example, there was an argument hinging on this.

2: Mitchell E-5 (1946-1949) 1956 FT7 Yao FT7

622 554 691 Mlima was a village headman of long standing and had been recognized as an Administrative headman. Ngwaya was a headman who had come to settle under Mlima.[1] After some years Ngwaya felt that because he had his own village he should be given a 'book' and receive money from the Government. Mlima however resisted the claim, saying that his 'book' had been given to him by Jalasi. Both went to Jalasi's court so that the difference could be resolved. Jalasi rejected Ngwaya's claim and upbraided him for being recalcitrant. Ngwaya was fined 9*s*. and ordered to pay £1 to Mlima in compensation.

622 554 643 691 A rather more complex case brings out the position of the chief, the Administration and the conflict of the prestige-giving principles of historical primacy and White recognition.

In 1948, an Administrative village headman, Kalonga, from Nyambi's area, decided to migrate down to the more fertile land along the banks of the Shire River. This land was in Jalasi's area, and it was partially occupied by a minor village headman called Malilo. Kalonga had already selected his site for the village when Malilo came up to him and told him that he was the first in that area and that Kalonga should have asked him to indicate a building site. Kalonga, on the other hand, pointed out that he was an Administrative headman and that Malilo was not, and there the matter rested. In time Kalonga, because of his official position, became better known than Malilo. Malilo was jealous of this prestige and in due course went to Jalasi and complained that Kalonga was 'getting too big for his boots'[2] and that he was only a Newcomer into that area. Jalasi sent for Kalonga.

At the dispute in front of the chief, Malilo reiterated his complaint. Kalonga merely pointed out that Malilo was jealous of his 'book'. Jalasi dismissed the case reminding the two headmen that it was he who was chief of the country. Shortly after this, Kalonga went to Jalasi alone and told him that Malilo had told him that he, Jalasi, was no chief because he should have taken the 'book' and given it to Malilo. Jalasi said, 'It is impossible to change over the "books" which are written by the Whites', and then sent a messenger to bring Malilo to court. When he came he denied the tale and said that as far as he knew the only reason for Kalonga's animosity could be that he had refused to give him the *subaye* greeting. Jalasi informed both headmen that they were to be independent of each other. Malilo

[1] *Kwakulipatika*—lit. one who had made himself a slave.

[2] *Kulikwesya*—reflexive causative of the verb *kukwela*, to climb, i.e. to cause oneself to climb or to exalt one's status.

2: Mitchell,E-5 (1946-1949) 1956 FT7 Yao FT7

was to report strangers coming into his village area independently of Kalonga. Nowadays, there is much tension between the two headmen and they summon each other to court on the slightest pretext. The peace is kept only by order of Jalasi. On the whole, however, it is Kalonga who has the higher status and superior prestige.

Unfortunately I have no figures to show how large a village becomes before its headman applies for Government recognition. The average number of tax-payers under village headmen who have just been granted 'books' might have provided this information, but I was unable to collect it. Formerly, they could become Administrative headmen only if they had more than 20 tax-payers under them. Nowadays, however, owing to differential fertility and the reduction in size of villages because of internal dissension, many of the Administrative villages (22 per cent) are smaller than the 20 tax-payer limit. They, however, retain their 'books'. I know that often within the Administrative villages of important headmen or chiefs, there are contained some minor villages bigger than some Administrative villages which are farther away. For example, in Chiwalo's own Administrative village, I know that the villages of Selemani, Ali Kasoka and Ntapasia are larger than many Administrative villages. It is not only the size of the village which allows a headman to apply for a 'book'. It is his relative status in the community. Men of higher rank than Selemani, Ali Kasoka and Ntapasia could probably approach Chiwalo and ask him for a 'book'. But these three are Newcomers. Selemani was a refugee from the Portuguese wars and went to live in Mlumbe area in Zomba district. He came to Chiwalo's area in about 1930. Ali Kasoka moved in about 1940. Ntapasia came about 1921. But they dare not approach Chiwalo himself to ask for a 'book'. Here Chiwalo's rôle of chief is compounded with his rôle of Administrative village headman so that they would be asking Chiwalo voluntarily to reduce the size of his Administrative village. It is only when their villages become conspicuously large that headmen may begin to force the chief's hand. They have always one sanction they can bring to bear on the chief—they can threaten to move out of his area into another chiefdom. The chief may not retain any of his subjects by force. If they express a wish to live in another chiefdom he cannot stop them. On the other hand, useful as this weapon

2: Mitchell E-5 (1946-1949) 1956 FT7 Yao FT7

622 is when it is used by an Administrative village headman, as I
554 shall illustrate later, it will not serve a minor village headman
643 much to move out of one chiefdom to another if his object is to become recognized as an Administrative village headman. If he goes to another chiefdom he is automatically regarded as one of the most junior of the headmen. If he goes to another chiefdom as an Administrative village headman already, he takes with him his 'book' and to some extent the rank associated with it.

162 The size of Administrative villages as measured by the number
621 of tax-payers in them is about equal in all three categories
622 of village headmen. Table X sets out the distribution. The

TABLE X

DISTRIBUTION BY SIZE OF VILLAGES UNDER ABORIGINAL, INVADER AND NEWCOMER ADMINISTRATIVE HEADMEN

Tax-payers	Totals			Total	Percentages			Total
	Aborigines*	Invaders	Newcomers†		Aborigines	Invaders	Newcomers	
0–19	6	29	56	91	30·0	21·3	22·0	22·2
20–39	7	49	85	141	35·0	36·0	33·5	34·4
40–59	2	25	57	84	10·0	18·4	22·4	20·5
60–79	3	16	29	48	15·0	11·8	11·4	11·7
80–99	1	1	13	15	5·0	0·7	5·1	3·7
100–119	1	6	4	11	5·0	4·4	1·6	2·7
120–139	—	4	4	8	—	2·9	1·6	2·0
140–159	—	1	1	2	—	0·7	0·4	0·5
160–179	—	1	1	2	—	0·7	0·4	0·5
180–199	—	1	1	2	—	0·7	0·4	0·5
200–249	—	3	—	3	—	2·2	—	0·7
250–300	—	—	3	3	—	—	1·2	0·7
Totals .	20	136	254	410‡	100·0	99·8	100·0	100·1
Mean .	39·0	48·5	45·1	45·9				
S.E. .	8·7	4·2	2·8	2·2				

* Excludes one village whose size was unknown.
† Excludes 3 villages whose sizes were unknown.
‡ The total excludes an additional 10 villages for which full details were not recorded.

Administrative villages of the Aborigines, mostly Nyanja, appear to be rather smaller than those of the Invaders and Newcomers.

2: Mitchell E-5 (1946-1949) 1956 FT7 Yao FT7

There were only 20 villages in that sample and the difference may not be significant though the distribution is skewed to the smaller villages. The mean number of tax-payers under Invader village headmen was slightly larger than that under Newcomers, but the difference was not significant.[1] Among the Invaders are included the chiefs and *ndunas* who usually have villages of over 100 tax-payers. Smaller villages are less likely to break away from chiefs and *ndunas* than they are from Newcomers and less important men.

Village headmen may exploit their connections with the chief in their competition with their fellows for Government recognition. In Tables XI to XIV inclusive, I have used the material I collected in Mposa, Chamba, Chikweo and Ngokwe areas only, because I know that my survey did not include many headmen in Kawinga and Liwonde areas. The total in these tables includes both Administrative and non-Administrative village headmen. From Table XI it is clear that there is a

TABLE XI

PROPORTION OF ADMINISTRATIVE VILLAGE HEADMEN AMONG ALL VILLAGE HEADMEN OF THE THREE CATEGORIES IN CHIKWEO, NGOKWE, CHAMBA AND MPOSA AREAS

Type of Headman	Aborigines	Invaders	Newcomers	Total
Administrative . . .	12	61	77	150
Non-Administrative .	1	37	111	149
Total	13	98	188	299
% Admin. Headmen.	92·3	62·2	41·0	50·2

$n = 2$; $\chi^2 = 21{\cdot}34$; $p = 0{\cdot}00002$.

significantly greater proportion of headmen of Invader descent than headmen of Newcomer descent who are recognized as Administrative headmen.[2] The percentage of Aborigines who are Administrative headmen is highest of all but it is based on such a small number that not much value can be placed on it.

[1] Diff. of means = 3·4; S.E. of diff. = 4·5; C.R. = 0·76; $p = 0{\cdot}4472$.
[2] Diff. of per cent = 21·2; S.E. of diff. = 6·07; C.R. = 3·49; $p = 0{\cdot}00048$.

2: Mitchell E-5 (1946-1949) 1956 FT7 Yao FT7

TABLE XII

PROPORTION OF ADMINISTRATIVE VILLAGE HEADMEN AMONG ALL VILLAGE HEADMEN WHO ARE RELATED AND NOT RELATED TO THE CHIEF IN CHIKWBO, NGOKWE, CHAMBA AND MPOSA AREAS

162
621
622

Type of Headman	Relatives		Non-Relatives	Total
	Direct	Clan		
Administrative . . .	38	36	76	150
Non-Administrative .	16	24	109	149
Total	54	60	185	299
% Admin. Headmen.	70·4	60·0	41·1	50·2

$n = 2$; $\chi^2 = 17{\cdot}23$; $p = 0{\cdot}00018$.

Table XII shows that among the chief's direct relatives (i.e. those who can trace some direct link, matrilineally, patrilaterally or affinally to the chief) there are more Administrative headmen than among the relatives who are related only through clan links. Further, it shows that there are more Administrative headmen among the chief's relatives as a whole than among those headmen who are not related to him at all.

It seems probable also that village headmen have used their link to the chiefs through religion to prosecute their claims to rank. From Table XIII we see that there are more Moslem

TABLE XIII

PROPORTION OF ADMINISTRATIVE HEADMEN AMONG ALL VILLAGE HEADMEN OF THE SAME RELIGION AS, OR DIFFERENT RELIGION FROM, THAT OF THE CHIEF (ISLAM) IN CHIKWBO, NGOKWE, CHAMBA AND MPOSA AREAS

Type of Headman	Moslem	Christian	Pagan	Total
Administrative . . .	113	27	9	149
Non-Administrative .	93	31	21	145
Total	206	58	30	294*
% Admin. Headmen.	54·9	46·6	30·0	50·2

$n = 2$; $\chi^2 = 6{\cdot}97$; $p = 0{\cdot}03078$.

* Excludes 5 village headmen whose religion I did not record.

2: Mitchell E-5 (1946-1949) 1956 FT7 Yao FT7

Administrative headmen than either Christian or Pagan. The chiefs, of course, are all Moslem. 162

Lastly, the same trend is seen among those headmen who are of the same tribe as the chief, against those who are of other tribes (Table XIV). Here, however, the difference is so small 621 622

TABLE XIV

PROPORTION OF ADMINISTRATIVE HEADMEN AMONG ALL VILLAGE HEADMEN OF THE SAME TRIBE AS, OR DIFFERENT TRIBES FROM, THE CHIEF IN CHIKWEO, NGOKWE, CHAMBA AND MPOSA AREAS

Type of Headman	Same Tribe	Different Tribe	Total
Administrative	85	65	150
Non-Administrative	76	73	149
Total	161	138	299
% Administrative Headmen .	52·8	47·1	50·2

$n = 1$; $\chi^2 = 0{\cdot}95$; $p = 0{\cdot}3422$.

that it may easily have arisen by chance. These factors, however, do not operate independently. There are more co-tribesmen, co-religionists and relatives of the chief among the Invaders than among the other categories. In other words, the factors are all intercorrelated and it is possible to consider any particular factor as the independent variable. From the point of view of the people themselves, to be an Invader is to have one of the best claims on the chief to become an Administrative headman.

THE SIGNIFICANCE OF THE SCARLET HEADBAND

Government recognition therefore provides the means whereby headmen are ranked in two major categories. But Administrative village headmen themselves are ranked by a number of prestige-indicating characteristics. The most important of these are the right to wear a plain scarlet headband and the right to hold boys' and girls' initiation ceremonies. 622 554 292

Of these two additional marks of rank the more important is the right to wear the scarlet headband. This headband is wrapped round the head, turban fashion. Most village headmen wear a headband of some sort, either of white or coloured cloth,

2: Mitchell E-5 (1946-1949) 1956 FT7 Yao FT7

622
554
292

while most commoners do not. In Kawinga–Liwonde area, village headmen of high rank are entitled to wear a plain scarlet headband (*mlangali*). One informant suggested to me that the plain scarlet stands for blood, i.e. it indicates one of the most important elements in rank to-day—warrior ancestry. I do not know that this opinion is well supported. Among the 424 village headmen I enquired about, 24 or 5·7 per cent were entitled to this mark of honour. Of these, three were Aboriginal Nyanja headmen, 17 were Invaders, and only four were Newcomers. Of the four Newcomers, one had the right to hold it before he had come to the area from Portuguese East Africa and that was before the White conquest ; one living in Chamba's area had brought it from Liwonde's area where he had been given the right to wear it ; and the other two were in Chikweo's area and were given the right by the present Chikweo. The three Aborigines who wear the scarlet headbands are Kuzumbu in Kawinga's area, and Mbeta and Mbande in Mposa's area. All three are settled around the shores of Lake Shirwa and they are said to have been the original Nyanja chiefs in this area when the Yao invaded. These chiefs also have boys' and girls' initiation rights. The rank they held in their own tribal communities is recognized by the Yao, who in any case ascribe superior status to the first-comers into an area. With the Nyanja chiefs the position became ambiguous. They had superior rank in that they were in occupation of the land before the Yao moved in. At the same time when they subjugated themselves to the Yao they accepted servility. Nowadays, the Nyanja are well integrated into the political life of the area and carry on their existence along the lake shores, still going to their traditional chief for the settlement of most of the cases not involving heavy compensation.

All Invader chieftains have scarlet headbands. Some of their direct relatives such as Stora, their clan relatives such as Nsanama and Mapundu, or their patrilateral relatives such as Cibwana Liwonde, the son of the first Liwonde, also have them. After these the next important group who are entitled to wear them are the *ndunas*. Examples are Kangomba, Masinde and Cindamba in Kawinga's area and Makaca in Ngokwe area. The *ndunas* are village headmen, usually unrelated to the chief, but who have been long associated with him, and who are his

2: Mitchell E-5 (1946-1949) 1956 FT7 Yao FT7

councillors. Long ago they held a most important position within the chiefdom. They were the loyal headmen and intimates of the chief, who could therefore be entrusted with the government of outer areas. They were posted to various parts of the chiefdom; kept the chief advised of war and attacks; maintained the peace among the village headmen in their areas; and collected the ivory to which the chief was entitled and sent it to him. Nowadays, the *ndunas* find themselves in competition with other officials who have arisen from the White Administrative system. The chief also finds advisers and councillors in his court clerks and his court sergeants, but the *ndunas* still have much prestige and advise and assist the chief in his administration of the area. Earlier, I mentioned that a senior headman was allowed to have a mat to himself, and only his own friends and people of his rank could occupy it with him. The only people in the chiefdom who could share the chief's mat, were the *ndunas*, and they called him *anganga* (my friend). Because the *ndunas* were not related to the chief they were in the peculiar position of being able to settle quarrels between the chief and his family: they were the arbitrators in arguments between the chief and his 'younger brothers' (junior male matrilineal relatives), or the chief and his wives. By Yao custom, rank is inherited by a village headman's successor, so that the relationship between the chief and his *ndunas* is perpetuated through successive incumbents. In Kawinga's area, for example, the *ndunas* to-day have the same name and the same relationship and relative position with regard to the chief as the *ndunas* who invaded the country nearly 100 years ago. This traditional ranking of village headmen emerges as soon as the Government alters its policy. Recently, when the idea of group headmen was reintroduced, the chief nominated the *ndunas* to become group headmen—a position not unlike that they held before the White conquest.

There is considerable difference between the size of Administrative villages under those headmen who have the right to wear the scarlet headband and those who have not. Table XV shows this clearly. The mean number of tax-payers under the former headmen is 80, while under the latter it is only 38. Among the village headmen with the right to wear the scarlet headband 62·5 per cent had villages of more than 60 tax-payers, while among other headmen only 25·0 per cent of the villages were in

2: Mitchell E-5 (1946-1949) 1956 FT7 Yao FT7

TABLE XV

622
554
292

SIZE OF ADMINISTRATIVE VILLAGES UNDER HEADMEN WITH SCARLET HEADBANDS AND THOSE WITHOUT

No. of Tax-payers	Without Scarlet Headband	With Scarlet Headband	Total	% Headmen with S.H.
Under 40	225	7	232	3·0
40–79	125	7	132	5·3
80–119	23	3	26	11·5
120–139	6	2	8	25·0
140 and over . . .	7	5	12	41·7
Total	386	24	410*	5·9

Combining villages of more than 80 tax-payers.

$n = 2$; $\chi^2 = 24{\cdot}56$; $p < 0{\cdot}0001$.

* Excludes 4 villages in which the numbers of tax-payers were unknown.

this category.[1] The village headmen who are entitled to wear the scarlet headband are mainly Invaders and people of high rank. Their villages are large because of their rank as well as vice versa.

I have never heard of a village headman's wearing a scarlet headband without the chief's permission, and I am not sure what sanctions the chief would apply to prevent it. I have heard men say that village headmen who are not entitled to wear it do so if they live far away, but take it off when they come near the chief's court. However, this was only in casual conversation and I did not have an opportunity to check it. From the point of view of the people the right is so bound up with traditional status that it is almost inconceivable that the custom should be flouted. As we have seen, among the Newcomers only two have been given the right within the last 30 years.

Yet the significance of the scarlet headband differs considerably from area to area. In Malemia and in Jalasi areas the custom seems either to have fallen away or never to have existed. In Jalasi area Islam may have some effect. In Malemia area the majority are Christians and most headmen have taken to

[1] Diff. of per cent = 37·5; S.E. of diff. = 9·77; C.R. = 3·83; $p = 0{\cdot}0001$.

2: Mitchell E-5 (1946-1949) 1956 FT7 Yao FT7

European-type clothing. In Nyambi area, abutting on Kawinga-Liwonde area in the north, there are 12 Administrative village headmen out of 57 who are entitled to the scarlet headband (21 per cent). For the Kawinga-Liwonde area the percentage is 5·7. An informant explained why a large proportion of headmen in Nyambi area had the right to wear the headband: 'The old Nyambis and the present one do not care. If a man has many huts, and if he says that his uncle had a scarlet headband, then he is given one too.' Even within the Kawinga-Liwonde area there is some variation in the number of headmen who are entitled to the scarlet headband. The following table sets this out.

Chiefdom	Total Admin. Headmen	% Scarlet Headbands
Kawinga	160	3·7
Liwonde	104	4·8
Mposa	30	10·0
Chikweo	48	8·4
Ngokwe	21	14·2
Chamba	61	4·9

Mposa area near Lake Chirwa shows such a high proportion because of the Nyanja ex-chiefs who are entitled to the scarlet headband. Chikweo and Ngokwe on the other hand are the Mpotola chiefs and seem to have taken the same attitude as Nyambi and his predecessors. In contrast to the statement about Nyambi, one Administrative headman in Mposa's area said: 'The chief's scarlet band is good enough for us all. If each had one it would be too gaudy!'

The Struggle for Initiation Rights

Village headmen are generally outside competition for the right to wear the scarlet headband. These rights have been established largely by ancient custom and are almost confined to the Invaders or to those who have had them before they came into the area. The competition for initiation rights, however, goes on steadily. H. L. Duff had noticed this as early as 1906.[1] Newcomers may approach the chief and agitate for the rights,

[1] See p. 81.

2: Mitchell E-5 (1946-1949) 1956 FT7 Yao FT7

622 554 881 pressing their claims on many grounds. They may stress that they have a large village under them and that they have many children to initiate, and argue that their villages are far away from the nearest headman who has these rights. Or they may use their rank and connection with the chief. If all else fails they may threaten to move to another chiefdom. Punyu threatened to do this.

622 554 881 578 In 1947, Punyu, an Administrative village headman in Chiwalo area, had 43 tax-payers under him and thought that he should have initiation rights. He had come to Chiwalo's in 1933 after the village had split in Chikowi's area near Zomba. He had relatives in Kapaloma's village in Chiwalo's area. He argued with Chiwalo that his uncle had had initiation rights. Chiwalo on the other hand, argued that Punyu village was so close to his own—a matter of under a mile—that he could not consider it. This argument went on for some months. Eventually Punyu told the chief that he was going to leave his area. Chiwalo then recanted to some extent and offered Punyu the permission to use the *ciputu* basket, that is, the right to conduct girls' initiation ceremonies. Punyu, after consulting his sister, took this and was satisfied.

But the chief is not always cowed by the threat to leave his area. He is sometimes able to draw on his official position to control his headmen. The argument between Makata and Ntimbuka illustrates this very well.

Makata was an Administrative headman of some standing in Chiwalo's area. He had been one of the invading headmen and was entitled to wear the scarlet headband. In 1947, he had 101 tax-payers under him and had been given the right to hold boys' and girls' initiation ceremonies at least 30 years ago. Ntimbuka on the other hand was a comparative newcomer. He came from Kawinga's area in about 1930. He is of Nyanja stock but has adopted the Yao language and customs. His village in 1947 had 23 tax-payers and was about 300 yards from Makata's. Early in 1947, Ntimbuka started quarrelling with Makata about the right to boys' initiation ceremonies. He felt that he ought to have rights as well as Makata. Eventually he told Makata that he would refuse to take the boys to his initiation ceremonies. Seething with discontent Ntimbuka went to complain about Makata to Chiwalo, and told him that he had had an argument with Makata and that he was going to leave the area because of it. Chiwalo called Makata and asked him what the trouble was. Makata told Chiwalo that Ntimbuka was jealous of the basket. Chiwalo

2: Mitchell E-5 (1946-1949) 1956 FT7 Yao FT7

then told Ntimbuka that he could not give a sacrifice basket to him because his village was so close to Makata's. Ntimbuka was not satisfied with this and continued agitating. Chiwalo, at last exasperated, threatened Ntimbuka that if he had any more trouble he would send him to Kawinga to be dealt with. Kawinga of course is the Native Authority in the area and holds the power of arresting headmen under Section 12 of the Ordinance. Ntimbuka was duly cowed by this threat and meekly agreed to send his boys to Makata's initiation ceremonies.

Chiwalo had to support Makata against Ntimbuka. Makata was a powerful headman: he had rank from his descent and a large village under him. Ntimbuka was a Newcomer and he had only a fifth of the followers that Makata had. If it meant losing followers it was better to lose the smaller village. As it was Chiwalo could use the power of the White Administration to keep Ntimbuka within his area and yet keep him subservient.

A Newcomer is unlikely to be given both boys' and girls' initiation rights. He is more likely to be able to get only one of the rights. Table XVI sets out the number of headmen in

TABLE XVI

NUMBERS OF HEADMEN HOLDING BOYS' AND GIRLS' INITIATION RIGHTS AMONG ABORIGINAL, INVADER AND NEWCOMER HEADMEN

Type of Initiation Right	Aborigines	Invaders	Newcomers	Total
Both boys' and girls' init. rights . . .	—	17	14	31
Boys' init. rights only .	1	6	10	17
Girls' init. rights only .	1	12	31	44
No init. rights . . .	16	84	198	298
Total	18	119	253	390*
% Init. holders . .	11·5	29·4	21·7	24·5

Combining Aboriginal and Invader totals.

$n = 3$; $\chi^2 = 6{\cdot}48$; $p = 0{\cdot}09254$.

* Total excludes the 24 headmen who have the right to wear the scarlet headband.

each category who hold initiation ceremonies. While more Invaders have the right to both ceremonies the proportion holding

2: Mitchell E-5 (1946-1949) 1956 FT7 Yao FT7

622
554
811

only one is roughly the same.[1] A Newcomer may approach the chief and ask for initiation rights in certain circumstances only. In general, these are that his village is a very large one, that he had the rights in the area from which he has just come, and/or that he is living in so isolated a part that it would be a hardship for his children to go to the nearest other headman who holds the rights; but he may press his claim if he is related to the chief and can approach him as a kinsman.

There is little doubt that the rights are closely associated with the size of the villages:

TABLE XVIIa

INITIATION RIGHTS AMONG INVADER AND NEWCOMER HEADMEN WHO HAVE VILLAGES WITH MORE AND LESS THAN 60 TAX-PAYERS

(The figures in brackets are percentages)

Type of Init. Right	Over 60		Under 60		Total
	Invader	New-comer	Invader	New-comer	
Both init. rights . .	10 (32·3)	9 (29·0)	7 (22·6)	5 (16·1)	31 (100·0)
Boys' init. rights only .	2 (12·4)	5 (31·3)	4 (25·0)	5 (31·3)	16 (100·0)
Girls' init. rights only .	2 (4·8)	13 (31·0)	10 (23·8)	17 (40·4)	42 (100·0)*
No init. rights	9 (23·2)	26 (9·3)	75 (26·8)	170 (60·7)	280 (100·0)†
Total . .	23 (6·2)	53 (14·4)	96 (26·0)	197 (53·4)	369 (100·0)

$n = 3$ ‡; $\chi^2 = 53·49$; $p < 0·0001$.

* Excludes 1 village whose size was unknown.
† Excludes 2 villages whose sizes were unknown.
‡ Combining Invader and Newcomer groups.

[1] Invaders with both initiation rights (17 of 119) = 14·3 per cent; Newcomers with both initiation rights (14 of 253) = 5·5 per cent; Diff. of per cent = 8·8; S.E. of diff. = 3·07; C.R. = 2·85; $p = 0·0044$.

Invaders with rights to only one of the initiations (18 of 119) = 15·1 per cent; Newcomers with rights to only one of the initiations (41 of 253) = 16·2 per cent.

2: Mitchell E-5 (1946-1949) 1956 FT7 Yao FT7

TABLE XVII*b*

INITIATION RIGHTS AMONG INVADER AND NEWCOMER HEADMEN WHO HAVE VILLAGES WITH MORE AND LESS THAN 60 TAX-PAYERS
(Arranged to hold the influence of village size fixed)

Type of Headman	Over 60		Under 60		Total
	Init.	No Init.	Init.	No Init.	
Invaders . .	14 (11·8)	9 (7·6)	21 (17·6)	75 (63·0)	119 (100·0)
Newcomers .	27 (10·8)	26 (10·4)	27 (10·8)	170 (68·0)	250 (100·0)
Total . .	41 (11·1)	35 (9·5)	48 (13·0)	245 (66·4)	369 (100·0)

$n = 3$; $\chi^2 = 3{\cdot}96$; $p = 0{\cdot}26667$.

Among all headmen (Table XVII*a*):

19 of 31 headmen who hold both initiation rights have villages with more than 60 tax-payers . . . . . = 61·3%
7 of 16 headmen who hold only the boys' initiation rights have villages with more than 60 tax-payers . . . . . = 43·7%
15 of 42 headmen who hold only the girls' initiation rights have villages of more than 60 tax-payers . . . . . = 35·7%
35 of 280 headmen who hold no initiation rights have villages with more than 60 tax-payers . . . . . = 12·5%

When the influence of village-size is held constant the advantages of Invaders over Newcomers in the competition for initiation rights is discernible, but the differences are so small that they are of doubtful significance (Table XVII*b*).

14 of 23 Invader headmen with villages over 60 tax-payers have initiation rights . . . . . = 60·9%
27 of 53 non-Invader headmen with villages over 60 tax-payers have initiation rights . . . . . = 50·9%
21 of 96 Invader headmen with villages less than 60 tax-payers have initiation rights . . . . . = 21·9%
27 of 197 non-Invader headmen with villages less than 60 tax-payers have initiation rights . . . . . = 13·7%

As we may anticipate, relationship with the chief is an important factor in the competition for initiation rights. Among the chief's direct and clan relatives for example, 36·4 per cent (51 of 140) hold initiation rights, but only 16·8 per cent (39 of

2: Mitchell E-5 (1946-1949) 1956 FT7 Yao FT7

TABLE XVIII

INITIATION RIGHTS AMONGST INVADER AND NEWCOMER HEADMEN WHO ARE RELATED AND UNRELATED TO THE CHIEF

622
643
554
881

Type of Initiation Holder	Invader				Newcomer				Total
	D	C	N	T	D	C	N	T	
Both init. rights .	5	8	4	17	2	3	9	14	31
Boys' init. rights only	2	2	2	6	1	1	8	10	16
Girls' init. rights only	5	5	2	12	5	12	14	31	43
No init. rights . .	26	25	33	84	13	25	160	198	282
Total	38	40	41	119	21	41	191	253	372
% Init. holders .	31·6	40·0	24·2	29·4	38·1	39·0	19·4	21·7	24·2

D = Direct relatives; C = Clan relatives; N = Non-relatives; T = Sub-totals.

Combining Invader and Newcomer totals.

$n = 6$; $\chi^2 = 22{\cdot}24$; $p = 0{\cdot}00112$.

232) of his non-relatives hold them [1] (Table XVIII). There is a slightly greater proportion of the clan relatives holding initiation rights than direct kinsmen, but the difference is insignificant.[2] Slightly more of the chief's relatives among the Newcomers hold initiation rights than those among the Invaders,[3] but once again the difference is so small that it might easily have arisen by chance. A much greater proportion of Invaders is related to the chief than of Newcomers,[4] so that among the Invaders the relative advantage of their kinship with the chief, as against the unrelated, is somewhat reduced. There are very many Invaders who can claim kinship with the chief in their struggle for initiation rights. Among the Newcomers, conversely, because there

[1] Diff. of per cent = 19·6; S.E. of diff. = 4·58; C.R. = 4·28; $p = 0{\cdot}00002$.

[2] Direct relatives (20 of 59) = 33·9 per cent; Clan relatives (31 of 81) = 38·2 per cent; Diff. of per cent = 4·3; S.E. of diff. = 8·2; C.R. = 0·52; $p = 0{\cdot}6030$.

[3] Newcomers (24 of 62) = 38·7 per cent; Invaders (27 of 78) = 34·6 per cent; Diff. of per cent = 4·1; S.E. of diff. = 8·2; C.R. = 0·5; $p = 0{\cdot}6170$.

[4] Excluding those entitled to wear the scarlet headband. Invaders (78 of 119) = 65·6 per cent; Newcomers (62 of 253) = 24·5 per cent.

2: Mitchell E-5 (1946-1949) 1956 FT7 Yao FT7

622
643
554
881

are so few of the chief's kinsmen among them, to be related to the chief is a distinct advantage in this struggle.

I recorded the origin of the initiation rights of only 38 of the 55 Newcomer headmen who hold these, excluding those who also have the right to wear the scarlet headband. Table XIX sets out these data. We cannot put too much reliance on these

TABLE XIX

THE ORIGIN OF INITIATION RIGHTS OF SOME NEWCOMER HEADMEN

Type of Initiation Right	Given by Chief of present residential chieftaincy	Brought from elsewhere	Total	% Brought in
Both init. rights . .	8	5	13	38
Boys' init. rights only .	9	0	9	0
Girls' init. rights only .	15	1	16	6
Total	32	6	38	16

figures because they cover only about three-quarters of the village headmen in this category, and these, moreover, were not randomly selected. As they stand, the figures support my earlier conclusion that Newcomers are more likely to obtain rights for only one initiation ceremony, than for both together. While 38·5 per cent (5 of 13) of the village headmen who hold both initiation ceremonies had brought in their rights with them from outside, only 4·0 per cent (1 of 25) of those who hold only one of the rights had done so.[1] An analysis of the periods when headmen were given their rights reveals consistent results.

From Table XX we see that:

Of 11 Invaders who hold rights to both initiation ceremonies, recent chiefs granted 3 . . . . . = 27·3%

Of 8 Newcomers who hold rights to both initiation ceremonies, recent chiefs granted 2 . . . . . = 25·0%

Of 12 Invaders who hold rights to only one of the initiation ceremonies, recent chiefs granted 3 . . . . . = 25·0%

Of 24 Newcomers who hold rights to only one of the initiation ceremonies, recent chiefs granted 14 . . . . . = 58·3%

[1] Diff. of per cent = 34·5; S.E. of diff. = 12·47; C.R. = 2·77; p = 0·0056.

2: Mitchell E-5 (1946-1949) 1956 FT7 Yao FT7

TABLE XX

WHEN INITIATION RIGHTS WERE GRANTED TO NEWCOMERS AND INVADERS

622
643
554
881

Type of Initiation Right	By early Chiefs		By recent Chiefs*		Total
	Invaders	Newcomers	Invaders	Newcomers	
Both init. . .	8	6	3	2	19
One init. only .	9	10	3	14	36
Total . . .	17	16	6	16	55

* This is obviously a crude classification. I have taken roughly 35 years as the dividing line. As the early chiefs I have classified all the Kawingas before and including Kawinga V who died in 1913; all the Liwondes before and including Liwonde III who died in 1921; all the Ngokwes before and including Ngokwe IV who died in 1905; all the Mposas before and including Mposa II who died in 1913; and all the Chikweos before and including Chikweo II who died in 1914.

In other words, recent chiefs have been granting single initiation rights to Invaders in the same proportion as they have been granting both rights, but they have been granting Newcomer headmen the right to hold only one ceremony more often than the right to hold both. Of the six sets of rights to initiation ceremonies granted by recent chiefs to Invader headmen, three were rights to hold only one ceremony, while 14 of the 16 initiation rights granted to Newcomer headmen were for one ceremony only.[1]

622
554
881
795
619

Headmen do not make use of their bonds of common religion or tribe with the chief in their competition for initiation rights. Table XXI sets out the numbers of headmen of different religion. There is a substantially smaller proportion of Pagan headmen (9·7 per cent) holding initiation ceremonies than either Christians (25·5 per cent) or Moslems (24·4 per cent).[2] Most Pagans, however, are also Newcomers so that this difference is actually a reflex of the generally lower rank of Newcomers. Table XXII sets out the number of headmen of the chief's tribe and of other

[1] i.e. 50·0 per cent against 87·5 per cent; diff. of per cent = 37·5; S.E. of diff. = 20·08; C.R. = 1·87; p = 0·0614.

[2] Pagans = 9·7 per cent; Others 24·6 per cent; diff of per cent = 14·9; S.E. of diff. = 7·94; C.R. = 1·88; p = 0·0603.

2: Mitchell E-5 (1946-1949) 1956 FT7 Yao FT7

622
554
881
795
619

TABLE XXI

THE DISTRIBUTION OF INITIATION RIGHTS AMONG HEADMEN OF DIFFERENT RELIGIONS

Type of Initiation Holder	Moslem	Christian	Pagan	Total
Both init. rights . .	25	4	1	30*
Boys' init. rights only .	12	4	—	16
Girls' init. rights only .	31	6	2	39†
No init. rights . . .	211	41	28	280‡
Total	279	55	31	365

$n = 6$; $\chi^2 = 5{\cdot}05$; $p = 0{\cdot}53778$.

* Excludes 1 headman whose religion was unrecorded.
† Excludes 4 headmen whose religion was unrecorded.
‡ Excludes 2 headmen whose religion was unrecorded.

TABLE XXII

THE DISTRIBUTION OF INITIATION RIGHTS AMONG HEADMEN OF THE SAME AND DIFFERENT TRIBE AS THE CHIEF

Type of Initiation Holder	Same Tribe	Different Tribe	Total
Both init. holders	20	11	31
Boys' init. holders only . . .	7	9	16
Girls' init. holders only . . .	23	20	43
No init. rights	156	126	282
Total	206	166	372
% Init. holders	24·3	24·1	24·2

$n = 3$; $\chi^2 = 2{\cdot}17$; $p = 0{\cdot}54167$.

tribes who hold initiation rights. Once again the proportion of headmen of the same tribe as the chief who hold initiation rights is the same as that of headmen of different tribes from the chief. We may say, therefore, that membership of tribe is not an operative factor in the granting of initiation rights.[1]

[1] The factors contributing to the granting of initiation rights are obviously all intercorrelated.

2: Mitchell E-5 (1946-1949) 1956 FT7 Yao FT7

622 554 881 292 The right to hold initiation ceremonies may be held concurrently with the right to wear a scarlet headband. For purposes of analysis thus far, I have treated the holding of initiation ceremonies separately. By common consensus, the wearing of this headband is an indicator of much greater rank than the holding of initiation ceremonies. The highest ranking headmen, like the chiefs, usually have the right to wear the scarlet headband together with the rights to both initiation ceremonies. In order to show how rank varies among the main categories of village headmen I have devised a numerical

TABLE XXIII

MARKS OF RANK AMONG ADMINISTRATIVE VILLAGE HEADMEN

Type of Headman	With Headband				Without Headband				Total
	Both	Boys only	Girls only	No rights	Both	Boys only	Girls only	No rights	
Aborigines:									
Direct rel.	—	—	—	—	—	—	—	2	2
Clan rel.	1	—	—	—	—	—	—	1	2
No rel. .	2	—	—	—	—	1	1	13	17
Total .	3	—	—	—	—	1	1	16	21
Invaders:									
Direct rel.	8	1	—	—	5	2	5	26	47
Clan rel.	4	—	—	—	8	2	5	25	44
No rel. .	3	—	—	1	4	2	2	33	45
Total .	15	1	—	1	17	6	12	84	136
Newcomers:									
Direct rel.	—	—	—	—	2	1	5	13	21
Clan rel.	—	1	1	—	3	1	12	25	43
No rel. .	1	—	—	1	9	8	14	160	193
Total .	1	1	1	1	14	10	31	198	257
Grand total	19	2	1	2	31	17	44	298	414

2: Mitchell E-5 (1946-1949) 1956 FT7 Yao FT7

system of ranking. I have assumed that the rarer the mark of rank the higher the rank it indicates. Table XXIII sets out the incidence of marks of rank among the 414 Administrative village headmen for whom I have recorded the data. In all, there were 24 headmen with scarlet headbands, 69 with boys' initiation ceremonies and 95 with girls' initiation ceremonies. I have given the holding of a scarlet headband the value of the reciprocal of the proportion of village headmen who hold that right, i.e. 414/24 = 17·3.

622
554
881
292

The value of holding a boys' initiation ceremony by the same procedure is: 414/69 = 6·0.

The value of holding a girls' initiation ceremony is: 414/95 = 4·4.

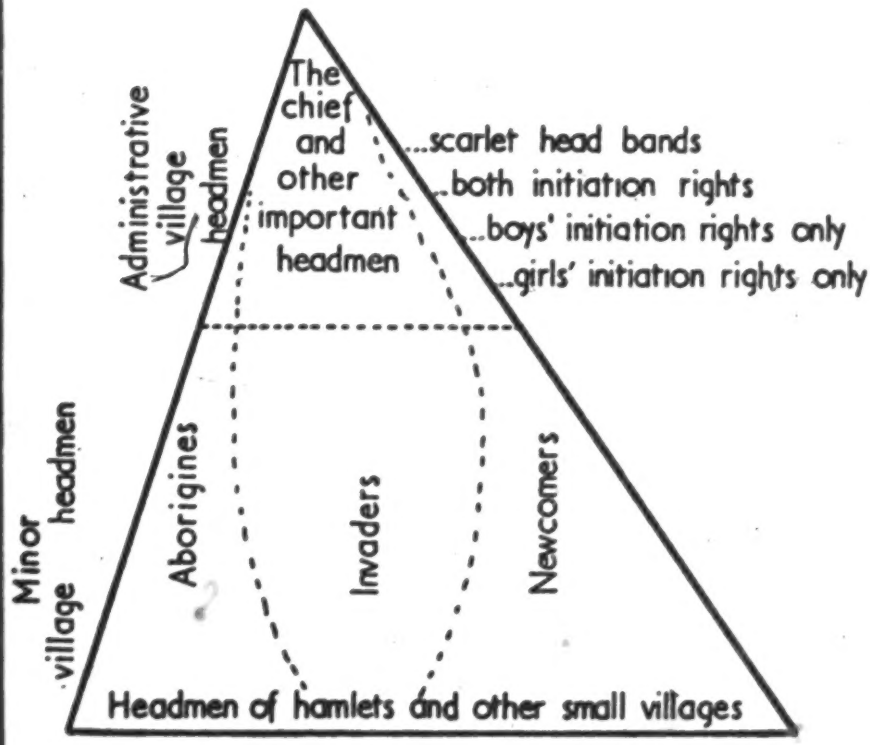

DIAGRAM 2. PARADIGM OF THE POLITICAL STRUCTURE.

2: Mitchell E-5 (1946-1949) 1956 FT7 Yao FT7

622 The value of holding the various combinations of rights then
554 are these:

881 Scarlet headband and both initiation ceremonies . . . . = 27·7
Scarlet headband and boys' initiation ceremony . . . . = 23·3
292 Scarlet headband and girls' initiation ceremony . . . . = 21·7
Scarlet headband alone . . . . . = 17·3
Both initiation ceremonies . . . . . = 10·4
Boys' initiation ceremony only . . . . . = 6·0
Girls' initiation ceremony only . . . . . = 4·4

We may now score the rank of headmen within any particular category by estimating the percentage score from a possible. For example, the score of the rank among Aboriginal headmen would be:

3 × 27·7 = 83·1
1 × 6·0 = 6·0
1 × 4·4 = 4·4
93·5 (expressed as a percentage of 21 × 27·7 = 16·1)

622 Using this method I have set out in Table XXIV the rank
554 scores for headmen in the categories in Table XXIII. Table XXIV shows that on the whole ranking among the Invader

TABLE XXIV

RANK SCORES FOR ADMINISTRATIVE VILLAGE HEADMEN OF DIFFERENT CATEGORIES

Aborigines:		
Chief's direct relatives	0	
Chief's clan relatives	50·0	
Chief's non-relatives	14·0	
All Aborigines		16·1
Invaders:		
Chief's direct relatives	25·4	
Chief's clan relatives	18·7	
Chief's non-relatives	13·1	
All Invader headmen		19·2
Newcomers:		
Chief's direct relatives	8·4	
Chief's clan relatives	11·3	
Chief's non-relatives	4·6	
All Newcomer headmen		6·1
All chief's direct relatives		19·6
All chief's clan relatives		15·8
All chief's non-relatives		6·8

2: Mitchell E-5 (1946-1949) 1956 FT7 Yao FT7

headmen is higher than among the Aborigines or the New-comers. It also shows quite clearly that the chief's direct relatives hold more of the privileges associated with rank than his clan relatives do, and they in turn hold more than his non-relatives. 622 554

The Political Process as a Struggle of Headmen Against the Chief

Modern chiefdoms appear to be organized on essentially the same principles as those described by Duff MacDonald. A chiefdom is headed by a chief and under him his subjects are organized in villages. Each village is represented by a headman, who stands in a relationship to the chief and to other village headmen, according to the prestige of the group he represents. This prestige is determined partly by his historical association with the chief in his past military exploits, partly by the size of his village, and partly by the prestige he has had in other areas. These elements were significant in Yao polity before the advent of the Whites, as we have seen from Duff MacDonald's description. Village headmen then were continually involved in a struggle for power among themselves and against the chief.[1] The struggle for power among village headmen continues to-day though in a changed context. Military power is no longer the object of the competition between them: the struggle for followers has become transmuted into a struggle for tax-payers. In harmony with the new political and economic situation a successful headman is not rewarded by military superiority, but by Government recognition and an official emolument. 643 622 554 178

At the same time, the chief whose power in the pre-White days resided in his armed forces, nowadays draws on the power of the White Administration to exercise his authority over his village headmen. His position is strengthened by Government decree and he does not hesitate to threaten to use it if necessary. Although the prestige of chiefs is higher than that of any of the village headmen, the difference in prestige between any chief and his most important headman is not very great. They are treated with almost the same deference by the minor village headmen and commoners, and they are referred to by the same term (*mwenye* = chief). The chief or an important village headman

[1] See Chap. II, p. 34.

The chief or an important village headman

[60] is usually addressed by a kinship term, either *baba* (father) or
643 *ambuje* (master or grandparent). When he is referred to, his
622 name is not used. Village headmen are owners or wardens of
554 villages (*asyene misi*) but only those headmen of some standing
178 are referred to as *mwenye*.

Important village headmen, like the chief, are in mystical
643 danger from pollution by death. They cannot come to the hut in
622 which a corpse is lying ; and they cannot eat the chicken which
554 has been brought to them by relatives of the deceased to announce
761 the death. Like the chief too, an important headman may be buried in a tomb in his village and not in the graveyard.

But an important element in their relationship nowadays is
643 that the Administration will support the chief against a village
622 headman when it comes to a trial of strength, and that a headman
554 these days is precluded by modern conditions from setting up
578 chiefdoms as he did in the old days. Village headmen therefore
691 must struggle for power against their fellows and the chief within the modern Administrative framework. Some attempts are made to resist the power of the chief but these are rarely successful. The dispute between Liwonde and Ndenda illustrates this.

Ndenda was an Nguru headman, who in 1947 had 284 tax-payers under him (Liwonde, the chief, had 186 in his village). Ndenda had come into Liwonde's area before the White invasion and had surrendered with his relative Mlelemba, to Liwonde. The second Liwonde had given him both initiation rights but, unlike his relative, he did not have the right to wear a scarlet headband.

In 1938 or thereabouts, Liwonde decided to move his village site from the Shire River to its present site about half-way up the Great Rift scarp. He sent two of his young men to look for a suitable site, and to plant some mango trees there when they had found one. Ndenda heard of this and sent one of his men to take Liwonde's men into custody. He took their hoes away and then told them to go back to tell the chief they were planting in his (Ndenda's) land. In due course Liwonde moved up to his new site, and asked Ndenda why he had taken the hoes away and whether he owned the country, i.e. was the chief. Ndenda now argued that Mlelemba's ancestors had been given the rights of chieftainship over this area and that the first Mlelemba in the area had given Liwonde some elephant tusks for these rights. Liwonde replied that the chief has a right to tusks and that many had given tusks to him but were not entitled for that reason to rights of chieftainship. Liwonde handled this situation by calling a meeting of the village headmen in the area. They assembled

2: Mitchell E-5 (1946-1949) 1956 FT7 Yao FT7

and the claims of Ndenda were debated. The headmen supported Liwonde in his claim that the tusks were part of the chief's rights and that when Mlelemba had come he had come 'to get fire from the chief'. Liwonde then upbraided Ndenda for imagining that because he had so many followers he was a chief, and fined him 10s. for being insolent. 643 622 554 578 691

The struggle between Liwonde and Ndenda did not end however. Some years afterwards a man came to Liwonde and said that he wanted to live in his area. This man was a complete stranger and had no relatives there. Liwonde sent him to Ndenda's village. Later while living in the village, this man stole some cloth. He was arrested and Ndenda brought him to the chief saying that the chief was responsible for him. Liwonde told Ndenda that he was being insolent again and that the responsibility must rest with him because the man had married into his village. He ordered Ndenda to pay £1 to compensate the victims of the theft. This Ndenda did but in his view this was tantamount to being chased out of the chief's area. He therefore moved with his children across the boundary northwards into Jalasi's area, and told his unrelated villagers to follow him. They refused to leave Liwonde's area. He was helpless and could do nothing about it. He returned to Liwonde's area a broken man and died shortly afterwards. His eldest son took charge of the village affairs, but so far no successor has been found.

The struggle between Ndenda and Liwonde has some interesting features about it. The strength of the chief in his Government position is not as evident as it has been in other struggles, as, for example, between Jalasi and Kalonga, or between Chiwalo and Ntimbuka, in the cases I cited earlier.[1] It appears only indirectly. Ndenda did not appeal to the District Commissioner against the fine as he might have done if he had felt his position to be more secure. The case history also shows how Liwonde ranged his other important headmen, 47 per cent of whom were kinsmen or co-Invaders, around him against Ndenda who was neither. It shows also that Ndenda's reaction to what he felt to be an injustice, typically enough, was to emigrate and to try to injure the chief by reducing his followers. When this failed he was defeated and it was his downfall, for, like a chief, 'a headman without people is nothing'.[2] 643 622 554 578

[1] Pp. 86 and 96.

[2] *Mcilambo naga naganakola Wandu ngawa mcilambo*: 'A chief who has no people is not a chief'—a saying frequently quoted to emphasize the dependence of the chief on his subjects.

2: Mitchell E-5 (1946-1949) 1956 FT7 Yao FT7

CHAPTER V

THE VILLAGE HEADMAN

Villages as Discrete Units

622 621 THE village headman is a key personality in Yao social structure. Viewed as an organization of villages, the social structure may be described in terms of the positioning of village headmen in relation to each other and to the chief. But the village headman is a representative of a corporate group, the village. The position he occupies in the structure as a whole, the rôle he plays in his interaction with other village headmen and the chief, and the prestige that he has in the community as a whole, are all derived from the village of which he is the representative, and in particular from the history of the dominant matrilineage of that village.

I am now considering, of course, all village headmen, however small their villages are, and not only the Administrative village headmen, as in the previous chapter. Each group which sets up a village recognizes one man as the 'owner' or warden of the village (*asyene musi*). The word '*musi*' (pl. *misi*) in Yao, refers primarily to the physical concentration of huts, but it is impossible for the people to separate in their minds the dwellings in a village from the people who inhabit them. In Yao, a deserted village is no longer 'a village'. It is called instead *lisame* (pl. *masame*),[1] a word which refers now not to the village as a unit, but to the collection of deserted and individual huts. The word *musi* or its diminutive form *kamusi* may be applied to a cluster of only four or five huts, or at the other extreme it may be applied to a large concentration of more than 500 huts.[2] The essential point is that the cluster of huts is occupied by a group of kinsmen who are independent of their neighbours. For example, a stranger may see a cluster of huts and ask, 'Whose village is that?' The reply may be, 'That is no village, they are only homesteads.'[3]

[1] From the verb *kusama*—to migrate.

[2] Large complex villages may also be called *msinda*.

[3] *Maŵasa* (sing. *liŵasa*), which I have translated as 'homesteads', strictly speaking refers to the households set up by married men.

2: Mitchell E-5 (1946-1949) 1956 FT7 Yao FT7

Further enquiries may reveal that this is only a section of a larger village, possibly a hundred or more yards away. 622

The boundaries of a village may not always be clear. Clusters of huts which are part of one village may be physically nearer another, but in the minds of the Yao, who see not only the huts but also the social relationships of the people occupying them, there is no confusion at all. As a general rule the villages are fairly compact and clearly demarcated from others, and even strangers have no difficulty in recognizing the autonomy of the group which is expressed in many different ways. MacDonald recorded that formerly a headman performed a certain amount of ritual which symbolized the unity of the village.[1] Much of this has fallen away, but the unity remains. 621

The ritual surrounding the foundation of a new village bears testimony to its persisting political significance. In this ritual the unity of the group, against other similar groups, including the village from which it has sprung, is expressed. On first arrival at a new village site the men build grass sheds, beginning with that of the headman. That night the headman pours a cone of sacred flour at the root of a tree on the site, and asks the spirits of his ancestors whether the site is propitious. Early next morning he examines the cone to see the answer. If a side of the cone has collapsed it does not augur well and another site is selected. If the cone is still whole it is taken that the spirits acquiesce, and permanent huts can be started. The headman then goes into the bush to find medicines[2] which he mixes with groundbeans. That night, with the medicated groundbeans in the hut, the headman has intercourse with his wife. In the morning those who are not sexually active come to the headman's grass shed to drink some water in which the medicine has been steeped and eat some of the medicated beans with a little porridge, which the headman's wife has prepared from the sacred flour. This medicine is called 'the medicine to strengthen the village' (*mtera wakulimbika musi*). Until then all members of the village should have been continent but after this sexual relationships may be resumed. The object of the medicine is to prevent those 622 621 787 622 621 751 834 372

[1] See pp. 31–2.

[2] *Nkulungutu* and *nkuta*, two plants commonly used for protection against *ndaka*. See f.n., p. 112. [824]

2: Mitchell E-5 (1946-1949) 1956 FT7 Yao FT7

who are sexually inactive from contracting *ndaka*.[1] At the same time the headman gives each household a piece of the fire which has been newly kindled in the traditional way by rubbing two sticks together.

The mystical danger inherent in the act of setting up a new village is well brought out in the propitiatory prayer and the abstinence from sexual intercourse. Once again it is the village headman who must make the offering to his ancestors; and it is the village headman who has intercourse with his wife so that the effluvium from his sexual activity may permeate the medicine in the hut and so protect the villagers from *ndaka*. Lastly, it is very important that the whole village cooks and is warmed by one fire. 'We are of one fire' expresses the common origin of two villages; though in fact every time a new village is founded a new fire should be kindled. To bring fire from the village of origin is to bring sorcery, since the Yao believe that sorcery can operate between persons closely linked by kinship only. To have one's own fire is to be autonomous from other groups.

The Burdens and Rewards of Headmanship

MacDonald had the perspicuity to see not only that the village headman was the representative of a corporate group and that he represented this group to outsiders, but also that he represented external authority to his villagers. The village headman who in his person stood for the unity of the group, performed certain ritual acts which emphasized this, such as praying to the village ancestors. In spite of the decline of the ritual his position is still regarded as exceptional. Much, however, depends on the rank of the village headman. There may not be much difference in ritual observances and mystical dangers between a headman who has in his charge a meagre three or four huts, and a commoner. In the larger and more important

[1] This is one of the most important mystical concepts of the Yao. I have described this condition and its implications more fully in *Marriage among the Machinga Yao of Southern Nyasaland* (R.-L.I. Paper), forthcoming. Briefly it is a disease characterized by œdema which affects those who are sexually inactive when they are suddenly brought into contact with a person, or an object which he has touched, after having intercourse. The people most affected are the young and the old, i.e. those who cannot have sexual intercourse. Those who are capable of intercourse are expected to have ritual intercourse with a stranger, and so fortify themselves against this dread disease.

2: Mitchell E-5 (1946-1949) 1956 FT7 Yao FT7

villages, however, the headman's activities may be as circumscribed by ritual prohibitions as the chief's are. 622 554

The village headman is subject not only to mystical dangers but also to other dangers deriving from his position of authority. It is significant that villagers never go to a diviner to find out the cause of a village headman's death. When I asked informants why this was so, they said, 'Well, what's the use of it? He has enemies on all sides in the village who are trying to kill him with their magic.' In harmony with this view of village headmanship, the symbolic object which represents the village headman in the diviners' gourds I have seen, is a small ring of grass (*singwa*), a copy of the grass cushion women place on their heads when they are carrying loads. This symbolizes the ring of enemies which surrounds the village headman. The saying 'the tortoise defecates on the one who carries it',[1] usually applied to chieftainship, applies equally well to a village headman. 622 787 578 482

A village headman may expect little material benefit from his position of authority. If he is an Administrative village headman he may be paid a small annuity of 5s. or 10s.[2] Returning labour migrants may give him a blanket or a military overcoat, or perhaps a few shillings, but this is not usual. If he is not a strict Moslem he will almost certainly be given a pot of beer from every brewing made for sale in the local 'club house'. On the other hand, if an important stranger, particularly a White official, arrives in the village he feels he must give his guest a chicken. It is mannerly to reciprocate with another gift, but not all Whites know this, or, if they do, do not observe it. In particular if the chief comes to his village, he will be expected to entertain him and here can expect no recompense—the chief 'eats from his country'. 622 651 431

The Yao know that the position of headman is no sinecure. Frequently the one chosen to succeed refuses to accept the position, especially if he is well placed in employment. It is significant that the word for an heir is *litegwa*[3]—the one who is trapped. An 622 554

[1] *Ngonjo jikunyela msyene iwajigele.*

[2] Until recently this was true. As I was leaving the field in 1949, I heard that the Administration had decided to abandon this system in favour of one in which only group headmen would be remunerated.

[3] Substantive form of the passive of the verb *kutega*—to set a trap as for animals. This word is not widely known, especially among the younger Yao.

2: Mitchell E-5 (1946-1949) 1956 FT7 Yao FT7

•622
292
516

PLATE V

Village headman, Nyenje, at his installation ceremony. He is not entitled to wear a scarlet headband but wears a coloured one instead. On his right sits his sister, on his left his wives, adopting the posture correct for an initiand—head bowed, eyes downcast, hands in the lap. A villager is dropping a penny into the cloth at the headman's feet while the headman's representative collects the pennies.

(July 1947)

[facing p.114]

2: Mitchell E-5 (1946-1949) 1956 FT7 Yao FT7

622 554 heir has to balance up the difficulties inherent in his position of leadership, including his fear of sorcery, with its honour and rank.

Commoners respect village headmen in the same way as minor headmen respect their superiors. Headmen of important villages are given a special greeting by the commoners; they usually wear a distinguishing headdress; they sit on a mat alone or on a chair, while the commoners sit on the floor; they walk in front of commoners on the road; they sit under the chief's verandah while the commoners sit in the sun; and they are buried in the village, while the unimportant commoners are buried in the graveyard.

Outside their villages too they are accorded deference. It is not only their own villagers who must treat them in this way: all commoners must do so. They are accepted by the chief as important men and are treated as such.

The Headman's Installation Ceremony

622 The peculiar position of the village headman is brought out particularly in the installation ceremonies. When a headman dies his heir should not assume the name until he has been formally installed. This is expressed as 'to enter the name' (*kwinjila lina*). All installation ceremonies are similar and there are only minor variations from one ceremony to another. The following is a description of a succession ceremony recounted to me by an informant. It concerns the succession to headmanship of Cimombo, a headman of some rank in Nyambi's area. Cimombo had a village of 30 tax-payers, wore a scarlet headband, and had the right to hold a girls' but not a boys' initiation ceremony.

Some time had passed since the death of Cimombo, and his heir, though commonly known by that name, had not been officially installed. Eventually he grew impatient and went to his perpetual[1] elder brother Kaukutu of Nyambi's area, who also wore a scarlet headband, and told him that he was going to Cholo to find work. Kaukutu told him that he might visit the men at Cholo but he himself must not enter employment there. The heir left for Cholo. As soon as he had gone Kaukutu collected his relatives and discussed the succession. They decided to get

[1] The relationship between some personalities in the social structure, originally kinsmen, becomes fixed and is perpetuated by their successors. See p. 122.

2: Mitchell E-5 (1946-1949) 1956 FT7 Yao FT7

Nyambi's formal permission to install the heir as Cimombo. Nyambi told them to start preparing malt for the 'beer of succession' and to tell him when it was ready. Kaukutu then sent a man to Cholo on a bicycle to call Cimombo back to the village. One Tuesday, the day after Cimombo returned, Kaukutu reported to Nyambi, who told him to tell the women to prepare the beer, since the installation ceremony would take place on Saturday. Nyambi sent his perpetual sons Makoka and Ncimba to officiate on his behalf. These two men were important village headmen, Makoka having the right to wear a scarlet headband though Ncimba had not.

On Thursday, Makoka and Ncimbo came to a place about three miles from the village. They had four women with them, one of whom carried a sacred basket (*cisolo cambepesi*). Ncimbo sent a message to Kaukutu to say that they were waiting, and he told the heir that he was wanted along the road where a meeting was being held. When the women saw Kaukutu and the heir coming to the place where Makoka and Ncimbo were waiting, they ran to hide in the bush. The heir sat down under a mango tree and Makoka went up to him and begged for some snuff. Before he had time to take the snuff bottle out of his pocket, the women came out of the bush, Makoka got up and struck the heir on the forehead with his fist, knocking him to the ground, took some flour from the sacrifice basket and sprinkled it on the heir, shouting, 'This is Cimombo—he is risen from the dead!'[1] They put him in a hammock and carried him back to his hut in the village amidst wild exultation. They put him on his bed and made him stay there. Later, Mkoka and Ncimbo came in and started to deliver a series of homilies on his position as village headman.[2] They pointed out that from that day he was a chief (*mwenye*), a headman who had the right to wear a scarlet headband (*acimweni shambendera*). Thenceforth, he was not to go to funerals, or at least not into the hut in which a corpse was lying. If his child were to die while he was in the hut he must not move until other people had come in. It was only when a headman of similar rank died that he might go into the hut. They advised him particularly that he would have to look after his village and told him that he should

[1] *Ce Cimombo ahulile—afimwire kulifile.*
[2] *Kwenda mipango*—to teach the customs.

2: Mitchell E-5 (1946-1949) 1956 FT7 Yao FT7

622 neglect neither his sorority-group nor the husbands in his village,[1] that his sorority-group and his village were his garden and he must take care of the young plants in it. The husbands were the watchmen who look after the women in the village. A headman dare not take sides or be unfair, nor must he talk behind people's backs. He must take care to settle differences amicably by discussion at meetings. They advised him not to pay too much attention to his wives who may have quarrelled with his sisters and tell him that they have been insulting him. When he hears a report like that he may be unfair to his sisters and people will say that he has broken his village through listening to nonsense. This sort of instruction went on through the night.

On Friday when the beer was brewed, Mlamba and Mbalwe, both headmen and perpetual sons of Nyambi, came to the village [344] and told the men to build a small grass shed for the successor to sit in. This the men did, and the women were told to plaster it and clean the huts out for the strangers who would be coming to the ceremony. On Saturday morning before cockcrow, Makoka and Ncimba got up and told the women to cook a big pot of porridge because they were taking Cimombo to bathe and when they returned they would want to find porridge ready. [415] Makoka took some medicine called *mkuluwo* in a bark container (*likungwa*) into the toilet enclosure. He put the medicine into [751] two jars of water and told Cimombo to wash himself in it daily as he was an important headman, and it would strengthen his 622 body.[2] After Cimombo had washed he went back into the hut where a mat was spread on the floor and on it were a dish of 266 porridge and three dishes of relish. Makoka and Ncimbo told him to take a little porridge, dip it into one of the relishes—whichever he chose—and eat it. Cimombo did so. They did not tell him that one of the dishes contained human flesh.[3] When he tried the dish of human flesh he vomited and all the villagers cried with joy, saying that he was a good chief because he had

[1] *Mlumba jao ni akamwini wao*—the meaning and significance of this in the village context is explained on p. 183.

[2] This is a euphemism for protective medicine against sorcery.

[3] The immediate question is: Where did the human flesh come from? No informant could tell me and I am inclined to believe that one of the dishes is 'ritually' made into human flesh for this ceremony. This special ceremony was always spoken about as if it were secret, especially from White people.

2: Mitchell E-5 (1946-1949) 1956 FT7 Yao FT7

vomited human flesh.[1] They said that they had a strong headman and that they could trust him; he was a good headman without witchcraft. If he had been a sorcerer they would have kept scolding him until the next morning. 622 266

About two hours after sunrise the people gathered and started dancing. At about this time Cimombo was brought out of the hut and put in the grass shed which had been built for the occasion. This was the climax of the ceremony.[2] He sat on a chair in the grass shed with one of his two wives on either side. Makoka then started a chant, exhorting the visitors to come to throw pennies at Cimombo's feet. Some of the people there made speeches about the type of behaviour they would expect from him. Then Nyambi arrived from the court village in a ricksha. When the noise had subsided he told the people that if they disobeyed Cimombo it meant that they disobeyed the chief. He emphasized the importance of the rank of the new headman. After the speech he presented 12*s.* to Cimombo which was received on his behalf by Ncimbo. Nyambi then left and the ceremony was over, but the people remained to dance and drink beer. 622 527 [533] [537] [493]

This description of the procedure following the 'coming out of the hut' is somewhat sketchy. The interaction of the headman and his villagers on this formal and ceremonial occasion is of great interest and importance. During the entire ceremony the headman adopts the pose which is appropriate for any Yao initiand. His hands are on his lap or on the arms of the chair and his head is bowed forward with eyes downcast. He neither speaks nor moves. His attendants, when necessary, wipe the sweat off his face or chase away the flies. The other occupants of the mat, who may be his wives, and sometimes his heir, adopt similar postures. In contrast to this, is the behaviour of the villagers who run about shouting wildly, the men discharging muzzle-loading guns, and women ululating in the typical Central African way. 622 516 [201]

Before the new headman comes out of the hut his mentors 622

[1] This is a test based on the witchlore of the Yao, who believe that sorcerers kill relatives with magic and then share out the flesh of their victims with fellow sorcerers in ghoulish feasts. [754]

[2] Called the 'coming out from the hut' (*kukopoka nyumba*). It is of course the first public appearance of the headman in his newly assumed status.

622 impress on him the difficulty of his position, and when he is taken outside some of this is repeated in public. At Nkacelenga's installation ceremony in December 1946, which I attended, the following incidents took place. Shortly after he was taken out
622 of the hut, Cigunda, one of the officiating headmen, said:
537 'Younger brothers of Nkacelenga, are you happy that Kambiri [1] has an elder brother? You women, have you cooked beer so that you can have your village headman?' In reply the men and women clapped their hands and a few came forward to throw some coppers into a cloth at Nkacelenga's feet. Cigunda went on to say, 'From to-day no woman will be impudent to the chief, because you are all of the same womb. All you men listen, only this man is your village headman!' Cigunda now turned to Nkacelenga who did not change his posture in the least. 'You village headman Nkacelenga, don't listen to what your wife says, because she will fight with your sisters and tell you that they have been cursing you. You should make enquiries when you have heard these things because you are a big man [i.e. important headman]. From to-day onwards you are a big man. Every person will be trying to spoil your name by saying that you are a bad man. You need to be patient and easy-going.' Turning to the public, Cigunda said, 'Even you husbands [*akamwini*] do not listen to what your wives say if they try to traduce the village headman, because some husbands can break the village.' Thereupon one husband got up feeling around for a penny, found he did not have one, and with much ostentation borrowed one from a fellow-husband sitting next to him. He then came forward to where Nkacelenga was sitting and said, 'You say some husbands can break a village. Is that true? But husbands build the villages? They can't break the villages.' Then very deliberately he threw the penny into the cloth at the headman's feet and went back to his seat. His speech was greeted with acclamation from the husbands. Cigunda said nothing after that and the ceremony was over.

In September 1948, during the installation ceremony of Mapata,
622 one of Kawinga's less important headmen in the northern
533 part of his area, the significance of the relationship of the headman to his relatives for the continuation of the village as a whole, was brought out more clearly. After the headman was

[1] A perpetual brother of Nkacelenga.

2: Mitchell E-5 (1946-1949) 1956 FT7 Yao FT7

brought out of the hut, as always, songs were sung and speeches were made. One of the songs was : 'A tree when it grows, grows with its branches.'[1] This is a reference to the dependence of the village headman upon the increase of his relatives for an increase in his rank. The Yao compare kinship with a tree, the component segments of the maximal lineage (the tree) being the branches. Then one of the officiating headmen mentioned that there were many sisters' sons of the old Mapata but that Kawinga and Chiwalo had selected the one on the chair to be the headman. He then exhorted the others neither to be jealous nor to resort to sorcery, but to exalt the name[2] that it might live long. This was followed by a song which introduced a second theme, 'A husband however rich he becomes here, cannot climb high.'[3] This song emphasizes that the uxorilocal husbands of the village can never achieve rank outside their own matrilineal villages however rich they are. The officiating headman then went on to say that some women rebuke their husbands when they speak subversively, but others side with them against the village headman. He told the husbands and women that they were wrong to do this and that they must desist. After this followed a public rebuke of the village as a whole. One of the younger brothers of the new headman pointed out that when the mother of the previous Mapata had died she had been buried in the graveyard and not in the village. He rebuked the villagers and told them that, when the present chief died, he should be buried in the village. A man who had been charged with neglect by his wife (his cross-cousin) paid the headman the compensation which he had refused to pay to her. One of the headmen then exhorted the villagers to respect their headman; to send someone to accompany him on his journeys to see to his wants; never to allow the headman to carry a gift he had been given, and so on. The ceremony ended when Kapaloma, who was representing the chief, hinted that Mapata might be allowed to wear a scarlet headband in the near future.

Village headmen represented the chief at Nkacelenga's and

[1] *Mtera pachikula ukwere Ωmanyambi.*

[2] *Kwenya lina*—to cause the name to climb.

[3] *Tonde, tonde, mkamwini nasicila mano ngakwela ial.* Tonde is the word for billy goat and its use here emphasizes the procreative functions of the husband in the village.

2: Mitchell E-5 (1946-1949) 1956 FT7 Yao FT7

622 Mapata's installation ceremonies. When an important headman succeeds, however, the chief himself usually makes a short appearance and talks to the people. When Nyenje was installed in July 1947, Kawinga attended. Nyenje has the same clan-name as Kawinga and is an Invader. In 1947, he had 109 tax-payers under him; he held rights to both initiation ceremonies, but he did not have the right to wear the scarlet headband. Kawinga arrived at 11.18 a.m. before Nyenje had come out of the hut and he went straight to it and entered. He emerged at 11.45 and sat on a chair under a drying stand. Kangomba, his head *nduna*, came and sat with him. In the meantime the new headman was brought outside and seated on a chair. Sitting on either side of him on the mat on which his chair was placed, were his two wives. Nsanama,[1] a minor village headman of the same clan-name as Nyenje, officiated. The penny-giving now started. At 12.10 Kawinga got up and walked over to the crowd, and 622 silenced them with a sharp whistle. They gathered round to 537 hear his speech. He pointed out that the dispute about the succession to their headmanship had been going on for three or four years and that there had been two candidates, one of whom he had selected as successor because he knew he would be sensible and wise, and would look after his people in the village and in the smaller villages under him. He said that he had recommended this man to the District Commissioner who, with the Governor's sanction, had supported him. He did not therefore want to hear that the man had fallen ill; he dealt strictly with sorcerers. He said that respect started with the relatives: brothers and sisters, the husbands and the boys and girls must [551] also respect 'the chief'. They must not mention his name but refer to him as 'the chief'. Kawinga went on to say that some husbands were evil and could split a village like this one, by telling lies to the headman and falsely advising the headman that his sisters were talking behind his back and insulting him. When he hears this he may break the village by ill-treating his relatives, thereby causing them to migrate and leave him all alone. Kawinga told the people not to go talking in other villages about the man who was in the chair; that sort of behaviour only led to sorcery. Finally, he warned them to help the headman in obeying the instructions of the White people who

[1] Not Kawinga's relative of the same name.

2: Mitchell E-5 (1946-1949) 1956 FT7 Yao FT7

came to the village and in accommodating strangers while he was away. He told them that disputes were to be referred to the headman immediately. Turning to the new headman he said he had to report anything unusual that occurred in the village, and that he was authorized to arbitrate in small cases in his and surrounding villages. 622 537

Kawinga then left the centre of the crowd and went back to where he had been sitting. Then an officiating headman, addressing particularly the women, said, 'Only a few months ago there was a quarrel between the present chief and his elder sisters. These women ran away to Malemia's area in Zomba district without reporting the matter to anyone. This must stop. With effect from to-day any troubles must be brought to the headman without delay: he will settle them. A tree cannot grow without branches and a headman or a chief cannot be known without his people's respect. Do not behave as children. This man cannot do things alone: he must have your help. We leave him in your hands and we do not want to hear about any more trouble. Follow all the instructions the chief has given you.' He took his leave and Nyenje was taken back inside the hut. The people now dispersed to where there was beer and dancing.

The Structural Reincarnation of Village Headmen and Perpetual Relationships

There appear to be a number of significant aspects of the installation ceremonies. First, there is the ritual death and rebirth of the village headman. The heir is 'killed' by a blow with the fist on the forehead, but is reborn the headman. The Yao do not believe that the spirit of the headman is inherited by the heir;[1] he has only eaten the name.[2] But socially he is born again and, logically consistent with this idea, he takes the wives of his predecessor without further marriage negotiation. He also takes over the property of the dead man, his clothes and his huts. 622 829 [587 428]

But this structural reincarnation of the headman has the important implication that the headman is immortal. He shares this characteristic with the group of which he is the leader. When 622 829 601

[1] As the Bemba do. A. I. Richards, 'Mother-right among the Central Bantu' in E. E. Evans-Pritchard and others, *Essays Presented to C. G. Seligman*, Kegan Paul (London, 1933).

[2] *Kulya lina* is a synonym for succeeding to headmanship.

2: Mitchell E-5 (1946-1949) 1956 FT7 Yao FT7

622
829
601

a village dies, so then does the headman die.[1] In his rebirth, he occupies the status that his predecessor held before he died, in both the kinship system and the political structure.[2] His mother's brother's children whom he formerly called 'cross-cousin' he now calls 'my children'. His mother's younger brothers whom he previously called *akwelume* (mother's brothers), he now calls 'my younger brothers' (*apwanga*), and so on. By the extension of this principle, an heir succeeds not only to the status of his mother's brother but also to that of the first of his name. Cigwaja VI, for example, calls the descendants of his mother's mother's mother's brother (Cigwaja IV) 'children'. In fact, he calls the children of any Cigwaja 'my children'.

Within the political field the same principle is used in establishing what we may call 'perpetual relationships'.[3] There are some village headmen who express their relationships to each other or to the chief by a kinship term. The headman Majaja, for example, is the 'son' of Nyambi. In fact, the first Majaja to establish a village was the son of the second Nyambi. The present Majaja is the third incumbent and three Nyambis have died since Nyambi II. Nevertheless, by positional succession both of the present incumbents are translated to the formative phase in their relationships, which is thus perpetuated to-day, and will be, in their view, for ever. The present Liwonde calls Kawinga 'elder brother'. Kawinga is in fact his mother's mother's mother's sister's son. The first Liwonde was the first Kawinga's younger brother. They invaded Nyasaland together. At this significant point in their history their relationship became fixed and then perpetuated in the political structure. This relationship, though phrased in a kinship term and moulded to some extent by the norms of kinship behaviour appropriate to the term used, is in reality political, for it fixes the relative positions of two villages through their headmen.

[1] Sometimes after a village has broken up and the name has not been heard of for some years, some survivor revives it and resuscitates the village.

[2] Dr. Richards calls this 'positional succession'. See 'Some Types of Family Structure amongst the Central Bantu' in A. R. Radcliffe-Brown and Daryll Forde (eds.), *African Systems of Kinship and Marriage*, Oxford University Press for the International African Institute (London, 1950), 224.

[3] This term was suggested by Dr. I. Cunnison's use of it for a similar practice among the peoples of the Luapula Valley. See his *Local Organization on the Luapula Valley*.

2: Mitchell E-5 (1946-1949) 1956 FT7 Yao FT7

The Rôle of the Chief in Headman's Installation Ceremonies

The second significant aspect is the importance of the chief in the installation ceremony. In each ceremony the chief has to give his formal consent to the succession. Note that the chief is approached by one of the headman's relatives, so that at this level, in spite of Kawinga's statement,[1] the succession dispute is over and the heir is decided upon. The chief's formal consent, his formal fixing of the date of installation, his personal appearance or the appearance of his representative, and his giving of the gift, all serve to set his official seal on the installation and to recognize its political significance. 643 622

The chief recognizes the leader of the group, both in his actions and his words. He also sees in the headman his representative, as when Nyambi said, 'When you disobey the headman you disobey me,' or when Kawinga said, 'Nyenje, you are responsible to report to me any unusual thing which occurs in your village here.'

When a chief comes into a village it is the village headman who entertains him. I was told that if the headman or his representative were away, the chief would be given no hospitality at all, because the villagers only entertain him through their representative, the village headman. Though the chief himself may not frequently visit villages, his representatives are constantly coming and going on his errands. Where affairs of day-to-day administration of the chiefdom are concerned these representatives are usually the court messengers, who may be paid from Native Authority funds or from the chief's private funds. The chief's representative in his tribal capacity, however, is usually his *nduna*, but it may be practically any village headman whom the chief selects. For example, he may send his *nduna* or one of his satellites as his representative to a *mapeto*.[2] He sometimes sends his representative as a referee to divinations and to chicken poison-ordeals following accusations [574] [644]

[1] Kawinga had a say in Nyenje's succession because he was a clan-relative. I have evidence that some lobbying had been going on because the successor that Kawinga chose was not chosen by Kawinga's relatives.

[2] A meeting held shortly after a funeral to decide whether death has been caused by sorcery or is due to natural causes.

2: Mitchell E-5 (1946-1949) 1956 FT7 Yao FT7

643 of sorcery, but the representative takes no part in the proceedings
622 at all; he is outside them and is there merely to see that affairs are conducted fairly.

The Value Attached to the United Village

622 The third aspect, the dominant theme in all speeches, is
621 the emphasis on the position of the headman as a leader of a corporate group, and his duty to maintain its unity. The chief and the officiating headmen warn the successor about the possibility of conflict in the village. They advise him to settle differences at once lest these should lead to a split in the village.
[591] They also warn him that his wife's relationships with her sisters-in-law, living as she is, virilocally,[1] are a danger point and may lead to trouble. The danger from the 'husbands' who are members of other villages and whose loyalties do not lie directly with the new headman is made manifest to him. At Nyenje's ceremony the officiating headman remonstrated with Nyenje's sisters because some had left the village without giving him an opportunity to settle their differences. The frequent references to the danger of sorcery are also references to the fear of the breakdown of the village. The villagers are exhorted to respect the headman and to be obedient to him for the general welfare of the group as a whole. Regularly the image of the tree and its branches is invoked, and it is made clear that the headman is dependent on his people for his rank and status, and they on him for their unity.

621 The disintegration of a village in Yao eyes is a sad affair and
166 the disruptive forces in it must be very strong before a section leaves it. People who want to leave a village are usually remon-
627 strated with and told not to 'break' it. In the frequent conflicts between the headmen and their younger brothers the arbitrators usually try their utmost to prevent a migration. They always award compensation to the injured party and tell the disputants to live in peace, and not to leave the village. Frequently, however, the leader of the dissident group prefers to refuse the compensation money, which is often as much as £6 or £7, and

[1] i.e. living with her husband's kin. I use 'virilocal' and 'uxorilocal' in preference to the older but ambiguous terms 'patrilocal' and 'matrilocal'. See Richards, 'Some Types of Family Structure amongst the Central Bantu', 208–9.

2: Mitchell E-5 (1946-1949) 1956 FT7 Yao FT7

621 his mother was ill and had gone with Lupunje's younger brother to
626 the diviner to find out the cause of the illness. The diviner indicated
753 that Lupunje thought that Kalambo was not showing him the proper respect. Lupunje knew that his sisters had lost their value in the lineage since they had stopped bearing children, whereas Kalambo's sisters were still reproducing. His malice had caused the woman's illness. When Kalambo got home he asked his mother's brother to blow water out of his mouth [1] and help him to prepare some medicine for the sick woman. This Lupunje did and the woman recovered immediately.

Shortly afterwards Kalambo remonstrated with his mother's brother for causing the illness of his sister, but Lupunje said that he had no control over it: the spirits had brought it on her. Kalambo knew that he could do nothing and abandoned the idea of building his own village. He knew that there was bound to be more illness if he carried on with his plan.

182 Clearly the belief in the mystical powers of the ancestors or of
621 sorcery is a force which prevents sections from breaking away
626 from the village. A break follows only when opposition within the village has reached sufficient pitch to force one of the sections to take the risk of illness, rather than to continue living in the village. Sometimes the dissident group comes back because further deaths at their new village site convince them that their action was wrong.[2]

Effects of the Headman's Personality

● 622 Whether a village maintains its unity or not, depends very largely on the personality of the headman. This is why the officiating headmen and others at the installation ceremonies are so insistent that cases should be settled quickly. The main duty of a headman is to maintain harmonious relationships within his village and to see to the welfare of its members. All severe [787] illnesses are immediately reported to him, and so are the results of all divinations. He usually sends his representative to divina- [764] tions concerning kinsmen not related to him matrilineally. He is immediately notified of all deaths and he organizes the funeral rites. Squabbles are brought to him for arbitration and even 622 where squabbles are settled by kinsmen in the village, usually the 692 headman is formally told of them. Frequently marriage diffi-

[1] An act which recants malice. See Chap. VI, p. 139.
[2] See the case history in Chap. VI, p. 153.

2: Mitchell E-5 (1946-1949) 1956 FT7 Yao FT7

culties are settled by the marriage sureties[1] who only report to him after the affair is settled. In disputes of unusual gravity, the headman may call in unrelated persons[2] to arbitrate, but he himself must be present. 622 692

His own behaviour is expected to be exemplary. Any deviation from the norm is likely to be strictly censured, not only by his own villagers, but also by other village headmen, who may say, 'Important men do not behave in this way.' A man who had an argument with his sister's son was told this. He had taken the dispute to a neighbouring headman who decided against the village headman and rebuked him for behaving in a way not consonant with his position. Village headmen should be above squabbling with their villagers. A village headman who was also a leech had virtually raped a woman whom he was treating. He tried to maintain this was part of the treatment. Her matrilineal relatives reported the matter to the headman of her village and he brought the errant headman in front of the chief who said, 'You are wrong to do this when you are an important man. You are a big man and you act as a commoner does. You ought to be able to show the commoners how to behave.' He was made to pay a compensation of £2 10*s*. and fined 10*s*. Had he been a commoner he would have been made to pay a compensation of only 30*s*. 622 577 558 684

The ultimate sanction to which all headmen are subject, is that their people will leave them if they behave badly. This was the fate of Cikumba. 622 558 837

In 1944 Cikumba had a village of about 30 huts. The son of the first Cikumba, Meya, had two wives who were living virilocally in Cikumba's village. Meya had enlisted in the army. While he was away, Cikumba, the village headman who was Meya's father's sister's son (though he called him 'father' because of positional succession), started taking Meya's two wives to beer drinks. Meya's sister one day asked Cikumba about his behaviour, but he only said that Meya could not do anything as he was far away. Things had gone too far, however, when one morning he was seen coming out of the 166

[1] The representative of a spouse in all affairs arising from conjugal relationships. They are usually senior matrilineal relatives. See Chap. VI, pp. 176–7. Their rôle is discussed fully in *Marriage among the Machinga Yao of Southern Nyasaland.*

[2] *Mundu juampambali*, i.e. a person from outside.

2: Mitchell E-5 (1946-1949) 1956 FT7 Yao FT7

622 558 837 166 hut of one of Meya's wives. Meya's sister wrote a letter to tell him of this and he replied that he could do nothing until he returned. In 1946, Meya returned to be demobilized. The third night after his return he questioned his wives about their fidelity during his absence. They at first held out against him but before long he intimidated them into admitting that they had slept with the village headman. Meya now went to complain to Mapata, who was Cikumba's perpetual mother's brother, and he said that he would come to the village the next day.

When Mapata came he confronted Cikumba with the accusation. Cikumba denied it until Mapata called the women. When they confessed Cikumba was forced to admit his guilt. Mapata now decided to call in an arbitrator, Isa, an important but unrelated headman who lived close at hand. Isa said he would come the following day when the matter could be thrashed out. When Isa and Mapata came they asked the women about the affair in public. They admitted the charge and Cikumba did not deny it. Isa then remonstrated with him for being a bad man and said that he was ashamed to hear about it. Cikumba had to pay £6 10s. to the injured man, Meya, who, however, refused to take it. He argued that Cikumba ought to have behaved as a father to him. But Cikumba had not. He, Meya, could not remain living in the village because his wives would be as Cikumba's wives. Isa said that he could not object because Cikumba had caused the trouble and had broken the village himself. How could he complain? Meya took two-thirds of the huts in the village away with him.

The Headman as a Representative of a Corporate Group

622 689 The headman is not only responsible for keeping the peace between the members of his village, but he is also supposed to control his members in their relationships with other villages. If members take corporate action against other villages, even if they do so without the consent of the headman, the chief will consider the village headman responsible. This was brought out clearly in the relationships between Cikoja, Mapata and Masimbo in Chiwalo's section.

622 689 423 226 Cikoja and Mapata are two of the more important headmen in Chiwalo's section. Masimbo is a minor village headman who lives in Mapata's village area. The quarrel arose over the question of fishing rights in a small pool lying between the two main villages. This pool was excavated by Cikoja and his villagers in 1924 during

2: Mitchell E-5 (1946-1949) 1956 FT7 Yao FT7

a severe drought, and he claimed the rights over it. One day in 1930, some boys from Mapata village came down to the pool with fish-poison. At about noon some boys from Cikoja's village arrived with their traps. When they saw the Mapata boys using fish-poison they told them to desist and tried to take away the fish. This led to a fight in which knives were drawn. One of Cikoja's boys ran back to tell him, and in anger he came down to the pool with some adults. The Mapata boys now ran back to Masimbo who immediately assembled some men and came to the assistance of the Mapata boys. The two groups joined battle immediately and there were casualties on both sides. Mapata heard about this and came running down to separate them. 622 689 423 226

The next morning they took the dispute to Chiwalo. He started by asking why Mapata had used fish-poison in someone else's pool without permission. Mapata replied that he did not know that his boys had gone down there. He said that Masimbo had told him about the conflict and that he had gone down to stop it. He was not aware of it before. Chiwalo now turned to Masimbo and said, 'Masimbo, you are in the wrong. You have caused the children to suffer. You went to make war because of your children. The people of Mapata, they are in the wrong because they did not report to the owner of the pool.' 622 689 423

When Cikoja was asked if he had anything to say he only replied that he was ashamed of what had happened because he was the first in the area, and until then they had been friends. The conflict had arisen because the children had done something which they did not know was wrong.

Chiwalo ordered Masimbo to pay 5*s*. and Mapata 6*s*. to Cikoja. He then told Cikoja that he should brew some beer and share it with the other two villages so that friendship might be restored and the children might go from village to village without fear. The chief's instructions were carried out and normal amicable relationships were re-established.

The way in which the villages acted as corporate groups is well illustrated by this incident. The responsibility of the village headmen for the activity of their members also emerges. The chief found Masimbo in the wrong for causing the fight, but he also fined Mapata because his boys had used fish-poison. The fines were paid by the village headmen, Masimbo and Mapata, to the village headman Cikoja, for they are the representatives of the corporate groups under them. 622 689

In no other field of village relationships is the corporate 621 423

2: Mitchell E-5 (1946-1949) 1956 FT7 Yao FT7

621 identity of villages more clearly seen than in the arguments that
423 arise over rights over waterholes. These are usually dug next to a stream or a marsh, or in some other place where the water will percolate into them. The physical labour of digging a waterhole establishes the rights to it, and a village retains these rights if at some time in the past any of its members had dug it.

621 In normal years, and of course during the rainy season, there
423 is enough water for all and no friction arises, but in drought
685 years difficulties arise. Friction between Nampeya and Cikuwita arose in this way in 1933.

622 During the dry season the waterholes that were normally used were drying up and the people of Nampeya decided to open up a disused one. When Cikuwita's people saw Nampeya's people using it they came to use it too. Nampeya's women saw this and told the other people they had no right to use the waterhole. Words passed between them and eventually there was a tussle between the two groups, during which a waterjar of one of Cikuwita's women was broken. Cikuwita's women said they would take the case up to Ntibwilibwi, a headman of local importance, and when they returned to their village they complained to their headman who took the complaint to Ntibwilibwi. He sent a message to Nampeya to arrange a date on which the dispute might be settled. On that day the members of the two villages gathered at Ntibwilibwi's hut. The dispute was settled amicably: the person who broke the waterjar was ordered to take a chicken and give it to the owner of the jar, and Cikuwita was told to gather his people the next day and make them dig a waterhole of their own.

The villagers in each of these situations had acted with regard to their fellows primarily as members of villages. They had seen themselves as members of corporate groups and had interacted as such. In the dispute in which the jar was broken, the individual responsibility was fixed and compensation awarded, but at the same time the village headman was instructed on behalf of his villagers to make a new well and thereby ensure peace in the future. In all these disputes, however, the headman had appeared as the responsible representative of his village.

2: Mitchell E-5 (1946-1949) 1956 FT7 Yao FT7

CHAPTER VI

THE LINEAGE FRAMEWORK OF VILLAGES

Matrilineal Kinship

TO outsiders a village appears to be an undifferentiated whole 621
and in interaction with other villages it acts as such. But
within the village, social actions are determined by membership 622
of kinship groups whose genealogical relationships to each other 571
differ from one village to another. The village headman who represents the unity of the village is usually a kinsman of all the villagers, but the links to him are different and diverse. Yet he commands the leadership of the village, not so much by his kinship to the villagers, for a villager may have other mother's brothers and fathers in the village, but by his position in a political structure, where he represents the village to outsiders and to external authority.

Yao social groups are organized on a principle of matrilineal 611
descent but we shall see that, although this is the main principle, it is modified by the general political mould into which villages are forced. We have already seen that, at least in the lines of important headmen, clan-names are inherited from the mother.[1] This is the simplest and most direct way in which matrilineal descent affects social relationships. The principle of matrilineal descent is far more important in organizing the smallest group which acts corporately within the village—the matrilineage.

A significant feature of Yao social structure is that the village 621
organization tends to cut across lineages. In the process of
segmentation of matrilineages, which I shall discuss in detail 613
later, new villages are formed. When this happens the dissident kin usually set up their homesteads a good distance from the original or parent village. The links between different sections of the same matrilineage, therefore, tend to become lost, and the new village, conscious of its own identity and unity, gradually loses its links with the parent village. The general structural relationship between the villages as wholes, and their headmen as their representatives, is fixed at the time when the division takes place, and this is remembered. But the actual genealogical

[1] See Chap. III, p. 71.

2: Mitchell E-5 (1946-1949) 1956 FT7 Yao FT7

Table XXV sets out the disposition of the adult survivors of this matrilineage. 613 621

TABLE XXV

RELATIONSHIP OF ADULT SURVIVORS: ALI KASUNKA VILLAGE

Relationship to Founder	In Village	Married out	Labour Migrants	Total
D	—	—	—	—
S	—	—	—	—
DD	3	—	1	4
DS	1	—	—	1
DDD	4	1	1	6
DDS	1	4	2	7
Females	7	1	2	10
Males	2	4	2	8

In this hamlet Ali Kasunka is both village headman and the senior male member of the matrilineage. He brought the village into Chiwalo's area and he had the responsibility for the welfare of its members. He has to arbitrate in the disputes that arise within the village and he must at least appear at arbitrations where the members of his village have come into conflict with outsiders. 613 621 622

THE CONFLICT OF MALE AUTHORITY AND UXORILOCALITY

Although descent is matrilineal, authority still rests with the men. The senior man by generation and age is the leader of the matrilineage. It is true that there are a number of small hamlets under women. Biti Nkula village is one, Biti Cimeta is another. But even for these villages there is usually a man who can be called in to handle the affairs of the village. He may be a classificatory brother of the village headwoman, or he may be her own son if he is old enough. For example, in Biti Nkula's village, it is her own son Adam who goes to the divinations and finds the necessary medicine when people fall ill. He also attends the court cases involving a member of the village. Adam is married to a woman in Ndiwagani's village about three-quarters of a mile away from his home and he is therefore easily 562 591 613

While the succession rule may indicate someone as having the
613 best claim to a headmanship or chieftainship, it does not ensure
622 that he will succeed. Succession to headmanship is not merely
562 a matter of assuming control over the matrilineal relatives of the headman. It is also taking command of the whole village as an entity in a political structure and keeping it together as a functioning whole. The village as a whole, as well as the perpetual senior relatives, has a say in the selection of the new headman, and they select the man who is likely to be the most suitable for the position. Here, as in most affairs, the women have an important say. When they consider his suit the village members discuss in particular the ability of the prospective headman to hold the village together. If he is unsuitable they may cite occasions when he is believed to have used sorcery, or sometimes they merely say that he ' has no mouth '. This means that he is incapable of settling the disputes which arise in the village and therefore is unable to keep peace within it. The attitudes of the villagers to suitors for a name are well brought out in the statements when the Misi name was considered.

There were two uterine nephews, Wadi and Mbulaje, whose claims were about equal though Wadi was the elder. The chief Kawinga sent his representative Kasonga to call for a decision. At a general meeting he asked the villagers whom they wanted. Typically Kasonga's remarks were addressed particularly to the women. There was a division of loyalties. Some said that they wanted Mbulaje because ' he was of good heart, he gave gifts, he laughed and was not bad tempered, and he looked after the people when they were ill '. Kasonga, however, asked the opinion of the women under Mbulaje, and they were apparently dissatisfied with him and supported his opponent. Kasonga therefore announced that the new headman would be Wadi. Mbulaje was dissatisfied with this decision and gathered about him his followers and went off to found a village elsewhere. But the position for Wadi was an uneasy one. He lived in dread of Mbulaje's sorcery. When he was ill just before he died, he accused Mbulaje of putting poison in his beer. After he died Mbulaje brought back the women he had taken away and adopted the attire of the village headman. The people cynically accepted this, saying that he should perhaps take it because if any other should try to be headman he would not enjoy the fruits long before he too was killed. But the women were not satisfied with this arrangement and led by Cilo, the headman's sister's son, migrated. They said, ' We wonder that our chief should have died. The heart of the present chief is not good. Those who will stay with

2: Mitchell E-5 (1946-1949) 1956 FT7 Yao FT7

him will be other people, but for us the bush does not eat a person.'[1] Mbulaje was left with a few personal adherents. My informant assured me that 'He is a most unhappy man to-day because he is forever accused of being the sorcerer who is causing the deaths of his relatives. People are saying that Mbulaje had broken the village because he wanted to be a chief when the people did not want him. The one the people wanted was killed. Nowadays, no one visits him because of his sorcery and the people are frightened of him especially at beer drinks.'

Immaturity disqualifies many prospective village headmen. A headman must be a man of experience and wisdom to take charge of a village. Unfortunately I cannot present quantitative data on

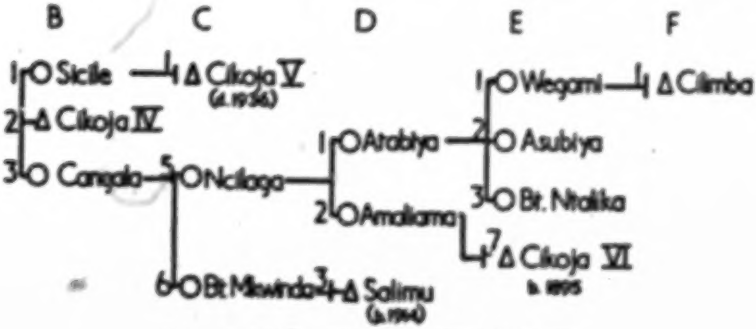

REFERENCE GENEALOGY. CIKOJA VILLAGE.

the ages when village headmen succeeded to their title, but my impressions are that unless a man is older than about 30 years he will not be considered for the name. Difficulty arises when there is a conflict between the principles of seniority and age. The older women do not always bear sons before their younger sisters, so that sometimes a man from a junior lineage section (*liŵelelyanandi*) may be older than a man from the senior. If the younger, but senior, is, say, over 35 it is likely that, other things being equal, he will take the name, but if not the man from the junior house stands the better chance. This is what has happened in Cikoja village. The position is as follows. When Cikoja IV (B2) died, quite regularly the elder sister's (B1) first-born son (C1) succeeded. But many years elapsed between the birth of

[1] *Litinji lipangalya mundu.* In other words, if we go to live in the bush somewhere Mbulaje will not bewitch us. Yao sorcerers are supposed to eat their victims. See p. 117, fn. 1.

622 the children of Ncilaga (C5) and Bt. Mkwinda (C6). There
613 was a big difference in the ages of these two women. Ncilaga
561 died nearly 30 years ago but Bt. Mkwinda died in 1948. When Cikoja V (C1) died in 1936, Salimu II (D3), who was born in about 1914, was very much younger than the present Cikoja VI (E7), who was born about 1895. Ncilaga (C5) had no sons, nor had Atabiya (D1), her eldest daughter, so the succession passed to the only son of Amaliama (D2) who was the senior male in that generation. Salimu II, genealogically senior to the present Cikoja, is to be the next headman. He has married a 'cross-cousin' (his mother's mother's brother's daughter's daughter's daughter) and lives in the village. He has already taken over the affairs in one section of the village. The other section has moved out and built about half a mile away with the present Cikoja VI. Note that the junior house—i.e. the descendants of Citeleka (A2)—are completely out of the succession. Wegami's (E1) eldest son, Cilimba (F1), is living virilocally with Cikoja VI in his section of the village and is already opposed to the prospective village headman Salimu. He is likely to be the village headman after Salimu dies and may even push his claim when the present Cikoja VI dies, because Salimu has been accused of sorcery on several occasions.

622 The conflict between sister's sons and mother's brothers at
578 successions has all but fallen away. The people oppose with
604 some vigour the idea that a younger brother should succeed. Frequently the chief or headman would rather his younger brother succeed, and sometimes indicates him as his successor. Kawinga, for example, has given his pre-succession name of Mlomba to his younger brother and many say this is tantamount to announcing Mlomba as the next Kawinga. This is violently repudiated by most people I have spoken to and they indicate a sister's son as the likely successor. Jalasi too, before he died in 1941, indicated Mbawa, his mother's younger sister's son as the successor, but when it came to the point a sister's son succeeded. The weight of custom is in favour of the sister's sons and usually the succession is fought out among uterine or collateral brothers in the first descending generation.

613 A matrilineal relative is always chosen to be chief in preference
662 to any other, but sometimes there is no heir. Other things being equal an unsuitable matrilineal relative will be chosen, or a

2: Mitchell E-5 (1946-1949) 1956 FT7 Yao FT7

woman will take the position, before the name will be allowed to pass to a non-matrilineal relative. While a matrilineal relative holds it there is always the chance that a suitable matrilineal heir will be born to a woman of the matrilineage, and will be able to take over the name. In Katuli's area the principle of primogeniture is so strong, I was told that rather than let a succession pass to a junior house, a woman is appointed to 'keep the name'. This happened before the succession of the present Katuli. Nkolojele was the present Katuli's mother, and when his mother's brother died Katuli was too young to become the chief. Instead Nkolojele took the name to prevent it from going to a junior lineage and held it from 1920 to 1936. Nkolojele was thus appointed Principal Headman under the 1912 Ordinance. In 1936, she retired in favour of her son who then took the name Katuli and became chief.

The name is kept within the matrilineage if it is at all possible. The history of the succession of Mpumbe's name is instructive in this context.

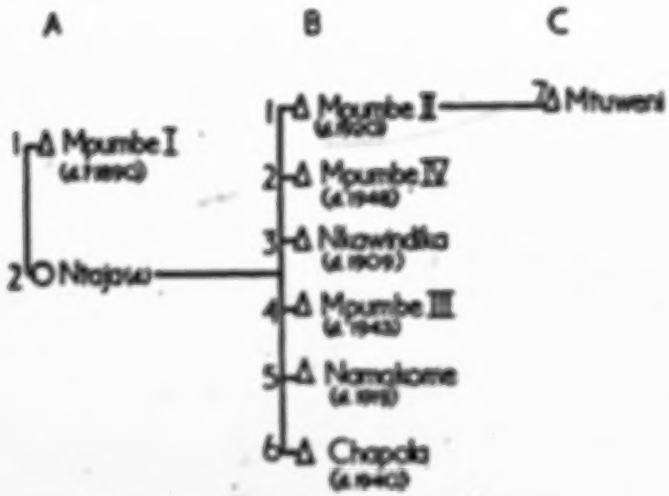

Reference Genealogy. Mpumbe Village.

Mpumbe, it will be remembered,[1] came from Jalasi's area to Kawinga's after the White attack on Jalasi in Mangoche. The genealogical summary sets out the relevant data.

[1] See p. 59.

2: Mitchell E-5 (1946-1949) 1956 FT7 Yao FT7

622 Mpumbe I (A1) died in Jalasi's area before the European attack in 1896. His sister's son (B1) succeeded. When he died in 1920 three brothers survived him. He had no sisters. His immediate brother (B2) was considered unsuitable for the headmanship and it passed instead to the next surviving brother Mpumbe III (B4). When he died in 1943 the only survivor in the matrilineage was Mpumbe IV (B2), and although he was by this time a very old man and had been previously considered unsuitable, he was selected as the next headman. In 1947, when I first visited the area he was blind, almost permanently bemused with beer and quite decrepit. At the same time Ntuweni (C7), the son of Mpumbe II by a slave wife, was about 50 years old and was the virtual village headman. All disputes were brought to him and he settled most of them. He also represented the village to the District Commissioner and at Kawinga's court house when the presence of the headman was required. Wadi, Mpumbe I's fifth wife's daughter's daughter's son, assisted him. The only thing that Mtuweni could not do was to make the sacrifices for the girls' initiation ceremony, but he took the old man to the shrine-tree and held his unsteady hand while the latter poured the flour on the ground and called on the ancestors. When Mpumbe IV died in 1948, the succession passed to a distant sister's son whom they found in Ngongondo's village in Liwonde's area. Mtuweni, who might have succeeded to the name, and for all intents and purposes was a village headman before the headman's death, was accused of killing the old man by sorcery so that he could press his claim to the succession. He consequently moved out with his sisters and founded a village of his own about 15 miles away.

622 When there are no heirs available one of two courses is open.
613 The first is that a patrilaterally-linked relative may succeed to the name. I have heard, for example, of a chief's son who succeeded as Matola in the Makanjila dynasty. The son, of course, had the same clan-name as the chief.[1] In the Makanjila case there is some evidence that there were other heirs available and that this succession was the result of a clever piece of lobbying by the slaves with the Administration. I have on record a few villages where this has taken place, and where the name has kept to the slave lineage.

A more likely reaction to this situation is probably what would have happened in Mpumbe's village if no matrilineal relative could be found. Mtuweni would probably have taken the

[1] Slave-children took the clan-names of their captors. See p. 72.

2: Mitchell E-5 (1946-1949) 1956 FT7 Yao FT7

village but called it Mtuweni and not Mpumbe village. The positions of the lineages in the village would have become inverted, and the patrilaterally-linked lineage become the dominant lineage. In this way villages may change their name or they may acquire two names, as happened to Mlungu village in Nyambi's area. Here a man called Masalu took over the control of the village. He was the son of the previous Mlungu and the village is known to-day by either of these names. The interesting point is what will happen when he dies, because there are now sisters' sons in a distant lineage old enough to take charge of the village. The rule is, as we have seen, that the matrilineal relatives always have the first claim.

Paternity and Segmentation

It is interesting to note that the paternity of brothers or sisters is not a differentiating feature in these social relationships. In the discussions which have hinged upon the care of sorority-groups I have never heard the paternity of brothers and sisters brought up as a reason why they should hold more or less closely together. The father is important in social life as I point out later, but while groups may be linked through paternity, it does not lead to a second principle of segmentation within the lineage.[1] This is manifestly the result of the fundamental difference in a system of matrilineal descent, where paternity is of less consequence than maternity is in a patrilineal structure. Among the Yao, unlike the patrilineal peoples of Southern and Northern Africa, no marriage payments are made; divorce is easy and frequent, and there are no disputes about the custody of children, who always belong to their mother's group whether they are illegitimate or not.[2] This is consistent with the view of the husband as a mere begetter of children. Among the Yao, the

[1] This aspect of segmentation in patrilineal peoples, with different wives of men as points of fission, is brought out particularly in Evans-Pritchard, E. E., *The Nuer*, Oxford University Press (London, 1940), and *Marriage and the Family among the Nuer*, R.-L.I. Paper, No. 11 (1944); Fortes, M., *The Dynamics of Clanship*, and *The Web of Kinship*; Kuper, H., *A Black Aristocracy*, Oxford University Press (London, 1947).

[2] This has been worked out in Gluckman, M., 'Kinship and Marriage among the Lozi of Northern Rhodesia and the Zulu of Natal', in Radcliffe-Brown, A. R., and Forde, C. D. (eds.), *African Systems of Kinship and Marriage*, Oxford University Press for the International African Institute (London, 1950).

2: Mitchell E-5 (1946-1949) 1956 FT7 Yao FT7

613 621 622

The father and headman is almost forgotten in those villages which, though founded by him, do not contain any of his matrilineage. Sometimes men who have a number of adult children move away and found small villages of their own. I have struck a few villages of this type on the outskirts of White settlement areas at Namwera and near Zomba. The man has been a servant of the Whites as, say, an estate labourer. After ten or fifteen years on the estates he decides to stop working. Local men have probably married his daughters and he has made acquaintances with local people, while his attachment to his home village has become attenuated. Consequently, with his daughters he sets up his own homestead somewhere near the estate. He is probably both senior and junior marriage surety for his daughters' marriages, and also responsible for the welfare of his children and grandchildren. He reports serious illnesses and deaths to his wife's brother or her male uterine kinsmen, but otherwise he runs the internal affairs of his village as if he were the senior matrilineal kinsman. But as his sons grow up the sorority-group organization exerts itself, and soon his adult sons begin to take over the more arduous duties concerning the affairs of their sisters. They now walk to a sister's husband's home to tell of the husband's illnesses, or trudge for miles to find a diviner when one of the babies is ill. Their father still retains control over the village land and other important affairs concerning the village as a whole. At this stage in its history the hamlet will be known by his name. When he dies the control of the hamlet passes to his eldest son, and now it assumes once again the pattern of the ordinary Yao village. For a while it may retain the name of the father, but in due course it begins to be known by the name of the son. Gradually the father fades into the background and the son comes to the fore. Eventually, when the son dies, his sister's son assumes control over the village and inherits the name. Now there are probably some of the original headman's sons' children living in the village and forming the nucleus of a linked matrilineage. In spite of the foundation of the village as an extended family, the lineage principle soon begins to mould the village into the typical Yao pattern. It is clear from many of my genealogies in Malemia area that when villages first moved in they were made up of a man and wife and children. Now after, say, twenty years the 'extended family' pattern has com-

2: Mitchell E-5 (1946-1949) 1956 FT7 Yao FT7

 613

pletely disappeared and we have in its place a straightforward 621
localized matrilineage as in Ali Kasunka village. 622

The Headman as the Link between the Dominant Lineage and the Patrilaterally-linked Groups

A headman's position when his own children or the children 578
of his predecessor have started to operate as a corporate group 613
in the village is clearly difficult. To the dominant matrilineage 622
they are outsiders, and they are a source of tension in the more complex villages. This, in essence, is the situation about which the officiating headmen have almost certainly warned him at the installation ceremony, when they told him to beware of his wife's chatter, because it may bring about a split of the village. The headman occupies a position of jural authority over his matrilineal relatives. He has succeeded to the name of his mother's brother and is structurally the most senior matrilineal kinsman in the village. He is directly responsible in court and outside it for the behaviour and welfare of the matrilineage members. At the same time he is personally attached to his children by ties of intimacy and sentiment. Where there is a conflict between his own children and the matrilineage members he is placed in an invidious position. By legal right he should support his lineage members, by moral right he cannot spurn his children. What he tries to do as a rule is to browbeat his matrilineal relatives into submission to maintain the peace within the village. He runs the risk, however, of alienating the support of his sisters who may turn to his younger brothers and leave the village. This is what happened in Mponda's village, as I have outlined earlier.[1] Here, it will be recalled, a quarrel started between two young girls over a pounding mortar. It spread to the mothers of the girls, who were the headman's wife and his sister. The headman tried to browbeat his sister into submission, but she immediately turned to her younger brother. The result was that the headman lost his sisters to his younger brother.

The way in which the two opposed groups in the village crystallise out into opposed factions cannot be more clearly shown than in the sequence of events in Mpakata village, in January 1947.

Mpakata was the headman of the village, and he had three younger brothers, Waluza, Merison and Nanculuya. Ali Cibwana, Mpakata's

[1] See Chap. VI, p. 155.

2: Mitchell E-5 (1946-1949) 1956 FT7 Yao FT7

578 613 622

adult son, went to Walusa one day and borrowed a chicken. Some days afterwards Walusa asked for payment for the chicken. Ali Cibwana took offence at the way in which Walusa asked for payment and told him so. Walusa remarked that Ali Cibwana was insolent and insisted on the payment for the chicken. Ali Cibwana now said that if his father's brother insisted on asking in this rude way he would not be paid back at all. The tempers of the two men became more and more frayed until at last Walusa threw Ali Cibwana to the ground. When Sanudia, Ali Cibwana's younger brother, saw this he grabbed up a stick and came up to Walusa and asked him why he had thrown his elder brother down. Walusa had hardly time to answer before Sanudia had struck him. At this Walusa's younger brothers joined in the fight. Mpakata now rushed up and started to support his sons against his younger brothers. When Mpakata's sisters and sisters' daughters, who were pounding, heard this, they took up their pounding pestles (poles about five feet long and three inches in diameter) and came running to Mpakata's younger brothers' assistance. When Mpakata saw these women coming with their poles he dashed into his house and emerged with a stick with which he defended himself. The noise and clamour had by this time attracted a number of strangers from a nearby village and they were able to pacify Mpakata's villagers. The matrilineal relatives of Mpakata gathered in one part of the village and Walusa told them they ought to leave. They decided, nevertheless, 'to say goodbye'[1] to Kaumbwe, who was a perpetual elder brother of Mpakata. Kaumbwe called in an unrelated village headman named Idi, and they held a meeting in the village the next day.

The dispute was discussed in the presence of the arbitrator. Walusa said he wished to leave the village with his sisters. Idi, however, told him that he should not do this but that they should take the matter up to Chiwalo's court. On an agreed day Mpakata and his children and matrilineal relatives went to Chiwalo's court where the case was arbitrated on by Capola who lived near to Mpakata. He found Mpakata guilty and ordered him to pay 10s. to Walusa. At the same time he told Walusa that he was not to take the female members of the matrilineage away from the village. And there the matter rested.

A village headman in Yao 'binds the village',[2] and when the village is made up of linked groups as well as his matrilineal kin,

[1] Ostensibly to say goodbye but in fact to air their grievances.

[2] *Akatawa mudi.* The word *katawa* may also mean to build. Yao houses are built by binding poles together with ropes and then filling the gaps with mud.

[342]

2: Mitchell E-5 (1946-1949) 1956 FT7 Yao FT7

the significance of this formulation of his position is clear. It is when he shows partiality that the village under him is likely to break up. If he sides with his children his matrilineal kin are almost sure to move out; if he sides with his matrilineal kin, his children are likely either to return to their matrilineal village or, if they are adult, split off to set up a village of their own. The situation is precarious for the headman and it is very difficult for him to avoid a split in the village if he cannot keep the two opposed groups at peace.

My investigations show that few villages have contained patrilaterally-linked groups through the lives of two village headmen, unless these groups were descended from slaves. When the headman dies his successor assumes his name and social rôle. He also assumes the position of father towards the remaining children, who are in fact his cross-cousins. But his relationship towards them is not the same as that of father to children. The intimate link of the blood tie has been lost and the relationship becomes formalized. As more and more headmen succeed the genealogical link between the patrilaterally-linked groups and the dominant matrilineage becomes more and more remote, and the relationship becomes more and more casual. What usually happens is that shortly after the death of the headman and father, the patrilaterally-linked group takes exception to what the new headman does or says and moves off to found a village of its own. The case history I quoted earlier [1] brought this out clearly. The new headman had had intercourse with the wives of his 'son'. The son complained to the arbitrators in the dispute that 'he should have been as a father to me, and he is not'. The result was that the son refused compensation, and moved out of the village with his sisters to build on his own. When this happens the father-son relationship between the two villages is preserved and perpetuated, but the link is entirely formal and co-operation between them is limited to mutual attendance at funerals.

Patrilaterally-linked Groups as the Legacy of Slavery

Slave-groups in a village are usually linked patrilaterally to the dominant lineage. This is because the headman who was usually the captor of the slaves kept the women as concubines. They were given quasi-child status in the village, so that their children

[1] 'The Split of Cikumba Village', see Chap. V, p. 127.

2: Mitchell E-5 (1946-1949) 1956 FT7 Yao FT7

621 this happens the husbands take their wives to their several villages with them.

Throughout this general process the links between groups of any particular area are constantly changing but the general pattern remains constant. A village expands outwards, and the various patrilaterally-linked groups, and often some of the segments of the dominant lineage, form hamlets separate from each other. The dominance of one of the local headmen over the others is still recognized and the general pattern of primacy is maintained. Some of the earliest villages in the area remain intact through many years. Villages which were small hamlets twenty or thirty years ago, when they had just moved into the area, have become relatively senior. Many headmen who were senior then have moved, or their villages have disintegrated, or ceased to exist. Other villages have moved in and are ranked lower. Thus through time the rank of any one headman may have changed, but the ranking system and the relationships of senior to junior headmen remain unaltered.

621 The general process is the same for the whole chiefdom, 622 though there is less overall structural change than in smaller 631 areas. The more important a village headman, the less likely is his village to disappear entirely. The most important village headmen, therefore, have long histories of association with the chief. Thus while there is considerable change going on at the lowest levels of the social system, the social structure of the whole chiefdom is remarkably stable. In other words, the rate of change taking place within the structure varies directly with the level of organization within that structure. The names of the *nduna* of Kawinga, Liwonde and Malemia are the same as those of the *nduna* who accompanied these chiefs into Nyasaland in the middle of the nineteenth century. Relatively few of them have disappeared. And so it is with important village headmen. The links between them, fixed by their rank and status relative to each other in perpetual kinship and other ties, form the political structure of the chiefdoms. From chiefdom to chiefdom the same pattern of organization is concealed behind an apparent diversity of actual links.

178 But, as a result of their contact with other peoples and their 622 absorption into the economic and administrative framework of 643 the British Empire, new social relationships are developing

2: Mitchell E-5 (1946-1949) 1956 FT7 Yao FT7

amongst the Yao. The religious sanctions behind tribal initiation ceremonies were weakened when many of the village headmen adopted Islam, and the rights of holding the Islamic equivalents fell to commoners who were leading Moslems. Thus for many village headmen the significance of the holding of initiation rights fell away. The White Administration has introduced new political personalities into the field, such as the court clerk, the court sergeant and other members of the chief's bureaucracy. These persons have been able to acquire peculiar positions of power in competition with the chief's traditional advisers.[1] Some wealthy individuals are able to wear better clothes, build better houses, and have more personal attendants, than the chiefs. For example, there is a carpenter in Kawinga's area living near an Indian store,[2] who is wheeled about in a garetta (ricksha) as the chiefs are, and who dresses far better than any of the chiefs.

178 622 643 [556]

But these changes have not yet affected the pattern of social relationships appreciably. Up to the present as new elements were introduced into Yao social structure they have been absorbed in terms of the traditional structure. The traditional chiefs, therefore, became the Principal Headmen when White Administration was imposed on them. Village headmen, no longer able to compete with each other in terms of followers and slaves, now began to vie with each other for 'books'. Important village headmen became the Moslem leaders, and the larger mosques were built at their villages. The chiefs, by virtue of their annuity from the Government, are able to maintain a higher standard of living than most of their subjects: they build burnt-brick houses, they wear finer clothes, they are wheeled about in garettas or, latterly, are pillion passengers on bicycles pedalled by retainers. By using their annuities as capital, they have been able to grow more tobacco than most of their subjects and so still maintain economic ascendancy over them.

So that until 1949, at least, in spite of the introduction of

[1] cf. my 'The Political Organization of the Yao of Southern Nyasaland'.

[2] He does not live in a village as most people do; he is an Nguru, and has none of his relatives near him, which is significant. His relationships with his clients are formal and transitory and he is not bound by traditional kinship ties. He therefore attempts to achieve prestige through conspicuous expenditure.

2: Mitchell E-5 (1946-1949) 1956 FT7 Yao FT7

178 new personalities into Yao society, the social structure remained
622 little altered. There were not enough Government officials, or
643 officials in the chief's bureaucracy, or rich individuals in Yao-land to be able to represent significant elements in the social structure. In the years 1946–49 Yao social structure was still organized in terms of ranked lineage segments at one level, ranked matrilineal groups at a second, and ranked villages at a third.

3:Stannus D-5 (ca. 1912) 1922 FT7 Yao FT7

765 might not break up for a week, but the practice was often modified to some degree, people returning to their homes during the day and coming back each night to sleep in the deceased's village. At the present time, there is a tendency to cut the proceedings short, and the mourners generally disperse on the second day after the funeral. This period of waiting is usually whiled away by playing and singing *chindimba*.

768 On the day before the company leaves the village — now, often on the day after the
765 funeral — the ceremony of shaving the head takes place. The *awile*, assisted in the case of a large party, by those who helped at the burial, shave the heads of all the dead man's relatives. When this is completed, they begin to tear down the deceased's house. The grass from the roof, with the hair removed from the heads of the relatives, is carried to the cross-roads and burned. The walls of earth are torn down and made into a heap; on the top, a stick is raised, and at its base is placed the dead man's snuff box. Sometimes a cactus euphorbia, *ngochi*, is planted on the mound and cassava round about. The snuff box is kept replenished with snuff. This, with the cassava, is reserved for the *awile;* no one else may partake of them.

While the house is being pulled down, the chief *mbilo* ties around the neck of the widow a single string of beads or a small piece of calico, *ng'onji*. After the house has been demolished, the *awile* return to their homes and on the following morning, everyone else departs.

767 The position of *mbilo* is a strange one. Every man in the course of his life probably acts as undertaker for some friend; many have probably performed the service several times. He receives no regular payment, but beads, and, nowadays, coins are often thrown into the pot of water with which he wets the heads of those he shaves after the funeral, and he has the freedom of the village in which he has so acted forever afterward, the degree of freedom being determined by the distance which he has travelled to officiate. When Wandalama died, a headman named Chisui from Makanjila's on Lake Nyasa, over a hundred miles away, acted as one of the *awile*. The occasions on which he revisited Malemya's village are
[431] well remembered, as they were marked by much frolicking and some obscenity. He was the recipient of enormous presents of fowls, sheep, and anything else he cared to take, and having commandeered men from the village to carry these gifts for him, he would leave, accompanied by all the people, yelling and shouting their joy at seeing him again.

Any fowls or other provisions that friends may present to the deceased's relatives at the time of the funeral to help defray expenses are given to the *awile;* no one else may eat them. Some may be kept against the next death in the family.

A few days after the funeral, recourse is had to the chief to settle whether any action
768 must be taken in regard to the cause of the death. Some near relative of the dead man will
● 622 be chosen for this purpose; he must not be shaved by the *awile* at the time of the funeral. The consultation takes place at some secluded spot outside the village. The chief always brings some one with him to witness what is said. On arriving at the appointed place, the chief salutes the unshaven mourner who is probably accompanied by other relatives, and

3: Stannus D-5 (ca. 1912) 1922 FT7 Yao FT7

then listens to an account of the circumstances attending the illness and death. The point at issue is whether there is any evidence pointing to death from unnatural causes which requires consulting a diviner. The chief practically always agrees with the relatives, and it is said that he will never press them to go to the *wachisanje* unnecessarily. The case may end with this conference, or here may begin the long series of events described under *usawi*.[1]

During the month subsequent to the funeral, certain taboos have to be observed. The widow may not bathe, and with the exception of the *swilo*, all who attended must refrain from sexual intercourse. At the expiration of this period, beer is brewed in the village, and all the friends and relatives are again summoned. This beer-drinking is called "the beer of rottenness," or "the beer of resignation." In addition to the beer, food is provided, and everyone helps himself without ceremony. *Chindimba* is sung and danced and at the present day, bands of trained dancers attend, including *ching'wenyeng' wenye*.[2] A pot of beer is sunk into the ground, marking the site of the dead man's house. The night of *matapata*[3] sees husbands and wives reunited, and the widow may go through ceremonial intercourse with a man appointed for the purpose called *lituwu* or *mbilo*. Sometimes the widow refuses *lituwu*, and is given medicine instead to cleanse her; her body is then no longer "hot" and likely to bring disease to those about her. A widow does not marry again for two or three years. A young man who loses his wife has no longer any standing in her village after *matapata*. He is usually given a present, with the suggestion that he go elsewhere. After the death of an infant, the mother is considered unclean. She sleeps on a mat apart from her husband till after the ceremony of shaving, and then undergoes a ceremonial coitus with her husband — in which case he is called *lituwu* — after which, ordinary cohabitation is resumed. If she has been a widow, or if the child was born "with disease,"[4] another man acts as *lituwu*.

The morning following *matapata*, all the fires in the village are extinguished. A fresh blaze is then kindled with the fire-drill, *lumungu*, either in the chief's house or in some spot nearby, and from there, fire is carried to all the houses. The ashes of the old fires, the stones supporting the cooking pots, and the porridge sticks are taken to the cross-roads, and there destroyed. Everyone then shaves all his own hair, head, axillae, and pubis. The custom of the second shaving by the *swilo*, described in *Africana*,[5] is, I think, an adaptation from the Anyanja. A year later, beer is again brewed, and all the relatives summoned to the village to pa[illegible]e of it. There is dancing, but no ceremony.

The Yao bury their dead in regular graveyards in wooded country, the thicker the forest the better, often two or three miles away from a group of villages. Different villages bury their dead in different parts of the burial ground; relatives are usually buried near one another. Graves are never revisited, and no one would enter a graveyard except at the time of a funeral, and then only after obtaining permission from the chief. Such spots are

[1] Vide infra, p. 288.
[2] Vide infra, p. 279 and Pl. I.
[3] Beer-drinking.
[4] Vide infra, p. 288.
[5] Macdonald, op. cit., p. 111.

3: Stannus D-5 (ca. 1912) 1922 FT7 Yao FT7

generous and popular, the donations may mount up to a useful sum. Dancing goes on late into the afternoon when all return to the village. 843

The man may not speak to his guardian again until after the birth of the child. The two women guardians, the *nhamusi* and the *nahanga*, as a rule cease sexual intercourse with their husbands during the same period or, at all events, during the last month before the birth of the child.

The child born of a woman who has not gone through *Litiwe* is buried alive. [847]

Chieftainship. The Yao when they migrated to their present country were headed by a number of their chiefs. These eventually settled in different areas adjacent to one another, each ruling over a considerable tract of country. The chief was supported by a number of headmen, each of whom looked after a village; the chiefs and headmen in turn being assisted by the village elders. 622 643

Often among a chief's counselors one found a number of his relatives, and sons and brothers were often made headmen. A man assuming chieftainship often had to dispose of a brother of whom he was afraid. 643

Chieftainship is hereditary, the chief's name being passed on to each successor. Succession is to eldest son of the eldest sister or a son of some other sister. Failing these, it passes to a grand-nephew. If there is no acceptable adult nephew, a full brother may succeed.

Macdonald's account of the Malemya's succession[1] is, I believe, incorrect. The old Malemya (Nalutumbo) was succeeded according to custom by his nephew, Kasabola who, as Malemya, was called Ndalama. Kumtaja was not a younger brother of Nalutumbo or Kasabola, but a cousin of the latter. Ndalama was succeeded by a nephew, not the eldest but the second son of a sister, the eldest having already succeeded to the chieftainship of Kumtaja was therefore ineligible. The present Malemya will be succeeded by a grand-nephew, the son of a daughter of his eldest sister, his sister having no sons. [114]

A successor inherited all the wives and slaves of the deceased chief and all his goods and chattels, guns, ivory and gardens. Any small possessions might be divided among the deceased's children and in the case of guns, those who had always used them often laid claims not to be separated from their weapons; these claims were often allowed by the new chief. 643 428

In the same way, any ordinary man's successor is his nephew, the son of a sister, who inherits all goods and chattels and slave wives, but not free-born wives, nor gardens, which go to the free wives. Stock is generally divided among the children.

Before 1891, when a British Protectorate was formally declared over Nyasaland, each chief ruled supreme. He was consulted as to the dates for *Unyago;* he directed the harvesting, etc.; he proclaimed war and generally was paramount among his people. It will be seen, therefore, that he was a busy man, but he received no direct remuneration. His wealth consisted of slaves and ivory. Slaves he obtained in warfare and as blood money, 643 [556]

[1] Op. cit., vol. 1, p. 180.

5: Mitchell E-5 (1946-1948) 1949 FT7 Yao FT7

C00 authorities to-day: those of the British administration. Yet the headman is a key official, if usually unpaid, in that administration. For example, he has to report suspicious deaths and illnesses and strangers, and he has to see that his villagers keep the village clean, hoe paths, use latrines, follow agricultural and veterinary regulations, pay tax, &c. He is no more ready than they are to accept these as good, but he tries to enforce the rules for he is liable to be punished if he does not, by fining, imprisonment, and ultimately deposition. As he applies these unwelcome and unaccepted rules, his position becomes subject to still greater strains.

II. THE YAO OF SOUTHERN NYASALAND

J. C. MITCHELL

567 554 THE Yao people were notorious at the end of last century because of their reputation as slavers. Livingstone had noted their close association with the Arabs in this trade and much of the effort of the early administrators of Nyasaland was directed to suppressing the slaving activities of the Yao. While the slave trade has been fairly well studied, the associated but different phenomenon of domestic slavery has not been nearly so thoroughly investigated. It seems that domestic slavery was an important part of the Yao social structure in those days, before the coming of the white man abolished at one stroke this and many other social institutions. But, though the institution of domestic slavery ceased to exist, the system of values upon which it was built still survives and still affects the social structure of the modern Yao. We might summarize this system of values by saying that the status of a man depends on the number of people over whom he exercises certain rights and for whom, in turn, he is responsible. In the past, a man could increase his status in the community by acquiring slaves. This he did by buying them with calico obtained through the slave trade, or with ivory, beeswax, tobacco, and other natural products; by taking them in compensation for the death of a relative; or simply by kidnapping them. Slaves were often taken as spouses by the members of the group over which the man exercised his command, or by the man himself as wives, and thus the group was further enlarged by natural increase. Though these slaves and slave-children had fairly well-defined rights, they were not free to leave the command of their owner, and the group was from that point of view a stable one. The leader's command over his matrilineal and other relatives, however, was not so absolute and it is with this aspect of the social structure that I am here concerned. This system of values still persists and forms the basis for evaluating the status of men in the Yao community. [622] The high status of a village headman is usually expressed in such terms as: 'He is a big man—he has many people', or 'he has many huts'. The village headman himself and the men under him are motivated by the same system of values so that in any village at any time there is a balance between the desire of certain members of that village to break away and establish units with their own dependants, and the desire of the headman to retain those people under his charge.

622 554 578 The tensions that exist in this situation are well recognized by the Yao and they always express them explicitly during the ceremonial succession to village headman-

ship. The difficulties of his position are brought home to the neophyte village headman in speeches made by old and experienced men. On one such occasion I heard a man say, ' Some men who marry into a village are bad and can split a village like this one by telling lies to the headman, saying that his sisters are talking behind his back and are insulting him. When a headman hears all this he might break his village by ill-treating his relatives, thus causing himself to be left all alone.' In this way the headman's responsibility for maintaining harmonious relations between the members of the village and himself is emphasized. His failure to do so results in what they call a break in the village—the departure of some of the members to live elsewhere—which is a severe blow to the status of the headman. In fact, he is dependent on his dependants for status, and the Yao are quick to point this out to neophyte headmen, saying, ' A tree cannot grow without branches.'

We can better understand the situation if we consider the social structure of the Yao village a little more closely. The Yao are a matrilineal people and are dominantly matrilocal. They live in small groups of huts scattered fairly evenly over the country and from a few hundred yards to possibly a mile or so apart. Such clusters may contain as few as five or as many as sixty or more huts, occupied by between 20 and 200 people.

These people are almost always kinsfolk, and in the smaller villages they are usually all either matrilineal descendants of a common ancestress or their spouses. In the larger groups there is a more complex situation which I shall analyse below. In the simpler groups there may be no male matrilineal descendant in the village and the leadership of the group is taken over by a senior female descendant of the founder of the village. Usually, however, if the group is large, one of the male matrilineal descendants lives patrilocally in the village and assumes leadership.

The relationship between a male matrilineal descendant and the female matrilineal descendants who are in his charge is signified by the word ' *mbumba* '. The word particularly refers to the relationship between a man and his sisters and I have therefore translated it as ' sorority-group '. It includes a man's full sisters, matrilineal female collaterals (whom he calls sisters), their female children, and the female children of those female children, and so on. It is usually used in the sense of ' somebody's sorority-group '. A man belonging to the descent-group of the sorority-group may refer to these women as ' our sorority-group '. The man who is in charge of the sorority-group is referred to as the *ayesu mbumba*. This could be translated as ' owner of the sorority-group ' but because of the property associations with the word ' owner ' in our language, I have instead translated this as ' warden of the sorority-group ' which expresses more accurately the relationship between a man and his female relatives. Even in those groups where there is a female in charge of the village and no male matrilineal descendant is resident in the group, there is usually some one man, possibly married in some other village, who is warden of the sorority-group. The warden of a sorority-group has certain precise duties to perform on behalf of his charges. First, he is concerned with the good relations between members of the sorority-group and with other such groups. He has to settle most of the domestic quarrels that take place between members of the sorority-groups. Second, and this is considered to be a most important function, he is the person who is the

marriage-surety for the marriages of the members of the group. Briefly this means that he must be approached before a marriage can be legally contracted by any member of his charge, he or his representative is present at the ceremony which formally announces the marriage, and he is responsible for the behaviour of his female relative in that marriage. Third, he is immediately concerned with the physical welfare and health of his sorority-group. He must track down the sorcerers causing their illnesses and supply the medicine to heal them. He has to arrange for the ritual purification of mourners after the death of one of the sorority-group's members. Fourth, he must be present in the court-house if one of his charges is involved in a case and he is usually looked to for the money for the fine. I have known a case not to begin because the warden of the sorority-group was not present. Frequently if the husbands of the female members of his charge default, he has to provide the hut-tax money.

Usually the warden of the sorority-group is the eldest brother of a group of adult full sisters. The younger brothers of the group of sisters, while concerned with their welfare, do not stand in this particular responsible position. They refer to the sorority-group as ' our sorority-group '. The elder brother refers to the sorority-group, be it noted, as ' my sorority-group ', and this sets him over and against his younger brothers. The position that the warden holds, however, is not rigidly fixed, for a younger brother may assume control of the sorority-group if for some reason he is dissatisfied with the way in which affairs are being conducted, and is able so to assert himself.

If we recall that the status of a man in a Yao community is determined by the number of dependants that he can command, it is easy to see that relationships between an elder brother and his younger brother are distinctive. The elder brother is responsible for the actions of his younger brother in much the same way as he is for one of his sorority-group, and the younger brothers have a great emotional attachment to their older brothers. Yet at the same time the elder brother stands in the way of the younger brother in his striving for status, in that while the elder brother is warden of the sorority-group the younger brother cannot be, and therefore cannot have dependants and status. It is not surprising to find that accusations of sorcery are frequently made between brothers and the result often is that the younger brother takes the sorority-group away from his sorcerer brother to some other place and sets up a new village with it. Therefore, one possible source of instability in a Yao village lies in the operation of the kinship system in a system of values which reckons status by adherents.

I have thus far been describing the simpler types of village. In the larger groups it is common for the warden of the sorority-group to live in the village where his sorority-group is. Then he usually brings one (or sometimes more) of his wives to the village, where she lives patrilocally. The daughters that are born to her do not return to the sorority-group from which the headman's wife came but marry and set up households near their mother in the village of their father. Thus there develops in time a second sorority-group in the village, alongside the first sorority-group, and related to it through the headman. At this point we may say that the man's position has changed from that of headman of a village containing a single sorority-group, to the more complicated and less secure one of village headman over a more hetero-

genous group, in which his jurisdiction over one part of the village arises from his position as the warden of a sorority-group, and that which he exercises over the other sorority-group derives partly from his position as a non-matrilineal relative and partly from his own personal qualities. The warden of the second sorority-group is the headman's own son and it is he who takes over all the functions proper to that position, but the successor to the headmanship is a man's sister's son, usually, though not invariably, the first-born son of the eldest sister. Each village headman in turn brings his wife to live in his village and each headman's wife in turn tends to set up a fresh group which is of a different lineage affiliation from that of the headman. In addition to this the warden of the sorority-group formed from the first headman's children tends in due course to live patrilocally and the children of his wife set up yet another foreign group in the village. Hence, theoretically, with each generation the number of opposed groups in a village doubles itself, and in a few generations, were this to continue, the position would become extremely complex. In fact a village of long standing is seen to be composed of a central lineage group to which the headman belongs, and a series of other lineage groups related to the headman's lineage group through one or other of the past and present headmen of that village. Such groups of different lineage make-up are usually mutually opposed and are held together only by the combined influences of a weak patrilineal connexion with the headman's lineage and the personality of the present headman.

622 591 612 613 621

This situation is clearly an uneasy one for the headman. His wife is looked upon as a stranger and is often made to feel it. The headman's sorority-group often expresses its hostility and jealousy towards her. The children of the two groups are on no easier terms. They call each other 'cross-cousin' (*asiwani*) and are expected to marry one another. At the same time the hostility between them is formulated in joking relationships. This critical situation of the headman is made clear to him on the day of his succession. One headman was told: 'As you have got wives, do not listen to what they say. They may be lying. Sometimes they will quarrel with your sisters and say that your sisters have been insulting you. This is false. When you hear these reports you may be unfair to your sisters and the people will say that you have broken your village through listening to nonsense.' Thus when conflicts arise between members of a village the headman is in a peculiar position and it is difficult for him to remain impartial. In such a situation the tendency is to call in an outsider to try to settle the differences. Sometimes these differences are patched up and the village continues as a unit. But, particularly after the death of the first village headman, the tendency is for one of the groups to move away to a completely new area, there to set up a unit of its own.

621 622 578 612 605

I quote an actual case to illustrate this procedure:

621 622 578 684

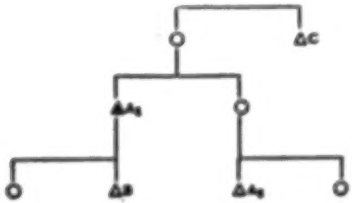

621 'In 1946 village A had about 30 huts in it. A certain man B was the son of the previous headman called A_1 and hence mother's brother's son or cross-cousin of the
● 622 present headman called A_2. B had two wives living patrilocally and while B was
578 serving in the Army he had a letter from one of his sisters (i.e. his mother's brother's daughter or cross-cousin to the headman) to say that A_2 was sleeping with B's wives.
684 When B returned he started making inquiries from his wives and he eventually secured a confession from them. B then went to a man called C, who stood in the relationship of mother's brother to the original A_1 and complained about the behaviour of the village headman. C also instituted inquiries and ascertained that it was true. C then approached a local headman of some standing (whom I shall call D) and asked him to arbitrate in the case. D pronounced A_2 guilty and awarded compensation of £6. 10*s*. to B. B, however, refused to take the money, and said that he wished to leave the village. D observed that he had every right to do this and that A_2 had no right to complain 'since he had broken the village himself'. B took his sorority-group, who occupied about twenty of the thirty huts, to a place about thirty miles away and set up a village of his own. The sorority-group of the village headman A_1 remained behind in the old village.'

This case illustrates the points that I have made. It shows how the two groups in this village stand opposed to each other in that B's sister wrote to tell him of A_2's conduct. Also when the village did break up it did so along certain very clear lines of genealogical relationship. Second, it illustrates the operation of the desire for dependants in that B refused what by Yao standards is a very large sum of money for compensation and preferred to move off and establish a village of his own. This attitude is also shown by the arbitrator who takes the point of view that regrettable as it is, the village must in the circumstances split, and while he appreciates the headman's feelings he makes it clear that the headman has no one to blame but himself. Third, it is interesting to note that this split took place after the death of the old village headman when the personal ties with both opposed groups were severed. Though the new village headman A_2 assumes the kinship terms of his predecessor and also calls the children of A_1 'children' yet in fact he is their cross-cousin while the old village headman was their father.

622 The position of the village headman in Yao social structure may be summarized
554 thus: the village headman is the leader of a group which may be a simple kin-group or a composite group of two or more opposed matrilineages linked to each other
621 through himself or one of his predecessors whom he represents to them. The numerical size of the village determines the status of the headman, but the size that it can reach is limited by an immanent instability in the kinship structure which is expressed, in terms of their status system, first, in the competition of brothers for the wardenship of the sorority-group, and second, in the competition between the headman and the wardens of the patrilineally linked sorority-groups, who wish to set up villages of their own.

621 The Yao see villages as units and this is clearly shown at the initiation ceremonies of boys, when the initiates are kept in grass-sheds, each partition of which refers to a
881 particular village. In the same way a person is identified as belonging to a particular village known by the name of the village headman. Thus a man might say: 'I come from Kumpumbe's village.'

5: Mitchell E-5 (1946-1948) 1949 FT7 Yao FT7

Village headmen themselves are graded in importance and there are certain marks of rank which distinguish the more important headmen. We have already examined one of the most obvious ways in which the village headman's importance is judged, that is, by the number of people in his village. In addition there are other ways in which village headmen may be distinguished both from the common people and from less important headmen. Thus, for example, some of the more important village headmen have the right to conduct initiation ceremonies, this right being granted to them by the man who is in a way the most important village headman of all—the Chief. The right to hold a boys' initiation ceremony (*lupanda*) is of more importance than the right to hold a girls' initiation ceremony (*ripanu*). Yet another mark of rank is the right to wear a plain crimson band around the forehead (*mlangali*), this right also being granted by the Chief. 622 554 881

The Administration has recognized the more important village headmen and has entrusted to them certain duties. By no means all the people called 'village headmen' in this paper are recognized as such by the Administration, but I do not know of any person who has the right to wear a red band and is not also an Administrative village headman. 622 554

The status system has apparently been taken over from pre-European days, but it is uncertain to what extent these important village headmen had powers. Some to-day have all the marks of rank that the Chief has, i.e., they hold both boys' and girls' initiation ceremonies, are entitled to the special greeting accorded to important village headmen (*zakale*), wear a red band, have the right to be buried in the village and not in the common cemeteries, and to have their bodies prepared for interment by people of similar rank. It appears that such people exercised a certain amount of power, by reason of their personal qualities, over less powerful neighbours, and some were able in the past to demonstrate their autonomy by moving off to establish petty chiefdoms of their own.

Nowadays the Administrative village headmen have certain statutory duties to perform towards other minor groups actually independent but considered, for the purposes of the Administration, to belong to the village. The relative importance of the headman is still the deciding factor in such questions as determining who is to be called in to arbitrate in a case. Thus, though for Administrative purposes a small village may be considered to be a part of a larger Administrative village under an Administrative village headman, yet when a case for arbitration occurs within that smaller village, some other person than the Administrative village headman may be called in as arbitrator. 622 554 631 692

Laws promulgated by the Administration are conveyed through the Chief to the Administrative village headman and in this way a hierarchy of power is being introduced. The small village headman now sees the Administrative village headman as a representative of the Chief and the Administration. The Administrative village headman in turn sees the Chief in this light. But in matters directly affecting the Administration, the small village headman also sees the Administrative village headman as his own representative *vis-à-vis* the Chief and the Administration. 622 631

In general the village is by far the most important corporate body in the social organization of the Yao, not only as a significant primary group but also as an element 621 622

621 100 THE VILLAGE HEADMAN IN BRITISH CENTRAL AFRICA
622 in the political sphere. The position of the village headman therefore is of cardinal importance and merits further study.

000

III. THE FORT JAMESON NGONI

7: Hetherwick M-5 (ca. 1900) 1902 FT7 Yao FT7

715 present fortunes. But it is to the human soul after death, when it is considered as having an influence on the lives and fortunes of those it has left behind in the world and consequently as a power to be propitiated and honoured, that the term *mulungu* is more strictly applied. Freed from the body it passes to *mulungu*, and there is regarded as endowed with powers which it never possessed when alive on
769 earth. To pray to such a spirit is described as *kulomba mulungu*, to worship *mulungu*, never *kuabo* in this case. Such *mulungu* worship enters largely into Yao religious or social life. In almost every Yao village there will be found a shrine which is the centre of the worship of the inhabitants. It consists of a carefully
346 built hut enclosed within a strong grass fence or hedge of a species of cactus plant.
769 The hut itself is built of the usual native materials—the walls of wooden posts,
778 bamboos, and strong reed grass bound together with bark-rope and plastered over with clay or stiff mud. The roof is of grass laid on a framework of bamboos, and is generally covered with long strips of white or coloured calico. On the ridge or apex of the roof are fixed a couple of flags or an umbrella or two. One wall is usually left open so that the interior is easily seen. Within, from the bamboo rafters are suspended handkerchiefs, cloths, branches of beads, etc., all offerings to the *mulungu* of the dead headman or chief from his friends and relatives. The floor is of clay carefully smoothed with mud in native fashion. A raised platform or mound of earth in the centre marks the spot where the grave was made. The
764 *ambo* or officials who provide all the funeral ceremonies, first dug for about 8 or 10 feet down in a perpendicular direction, and then on the western side of this well they hollowed out a shallow cave in the earth. In this the body was placed, laid on its side with the knees bent up under the chin, and the face turned towards the east. Various articles of personal property were next placed beside the corpse, clothes, ivory, guns, axes, hoes, etc., and the mouth of the cave closed up with wooden posts and a strong reed mat. The grave was then filled in and the surface
[764] carefully finished as we have seen. At the head of the mound a native pot was fixed in the ground for the reception of the offering of beer which is an almost invariable accompaniment of any act of worship paid to the *mulungu* of the dead.

769 Such a shrine marks the grave of almost every Yao chief or headman, and is
[715 regarded as the abode of his soul or the spot where his *mulungu* is most accessible.
622] If his successor is about to undertake a long journey or enter on any warlike expedition against an enemy or neighbour, he must first *kutopa mlungu*, place an offering here to secure the favour and assistance of the *mulungu* of the dead. Should a long-continued drought endanger the prospects of the grain crop, the departed chief must be solicited to send the lacking rain. A feast is first prepared, almost always of beer, sometimes with the addition of native porridge, fowl, or goats. The worshippers gather round the shrine bringing part of the food which they have prepared. Their priest for the occasion is the successor of the dead chief, sometimes one or other of the *ambo* who placed the body in the grave, or it may be that any other near relation of the dead man is chosen to represent the people and act
[602] as their spokesman. The nearer the relationship the more influence will he have with the dead.

[p. 141 8]

181 The people with whom this paper is concerned[1] occupy that part of Nyasaland between the Chikala Range in the South; Mount Mangoche in the North; the Shire River to the West; and the Portuguese East African border to the East. This area is represented on the accompanying diagrammatic map. A more detailed description of the general social organization of the Yao in this area, and of their history and general cultural background is to be published shortly.[2] At
361 this point it is sufficient to say that the Yao are semi-subsistence cultivators living in village settlements ranging from a few huts to sixty or more, with an average of about twelve. This represents say a population average of about 60 per village but ranging from 15 to over 200.
621 These village settlements are inhabited by groups
611 of kinsmen. In general there is a matrilineal core
622 of kinsmen of whom the village headman, who has the same name as the village, is one. In some more complex villages there are subsidiary matrilineages related to the matrilineal core agnatically

[P. 141 C]

(62) through one or other incumbent of the position
of village headman.* Succession to posts of autho-
(61) rity, including that of the chief, is matrilineal.
(62) Ideally the succession should pass to the first-
born son of a man's eldest sister, but this is not
always followed, for the personal qualities of the
successor are more important.

(61) The total African population of the area studied
is 65,000. There are one or two Indian traders
and two Europeans permanently resident in
the area. One European is a missionary in the
north-east corner and the other an Agricultural
officer in the north centre of the area. Part of
(63) the area is administered by the District Commis-
sioner, Zomba, and part by District Commis-
sioner, Fort Johnston, and these officers tour
the districts under their jurisdiction. Occasionally
other White officials and labour recruiters appear,
but in the main, Whites are not often seen in this
(49) area. The one road traversing it is usually impas-
sable for a part of the rainy season.

643
T12

fice to the ancestors. The other public occasion was at initiation ceremonies. A successful initiation, i.e. one in which the initiates were not beset by misfortune, depended upon the goodwill of the ancestors of the chief. Initiates therefore gathered at the chief's court-village before the initiation, when the sanction of the spirits was asked and the initiates severally blessed. After this they scattered to the bush-schools near their villages only to return when initiation was completed and the chief received them into tribal society.

643
769

The people who had submitted themselves, willingly or unwillingly, to the rule of a chief, in turn expected certain services from him. He provided them, as we saw, with mystical protection through his ancestors. On a more pragmatic plane he was able to arm and co-ordinate military forces thereby giving his people protection from attack. Within his area of rule he was a common person of final appeal in the regulation of relationships of his subjects.

In these various ways, by propitiating his ancestor's spirits on behalf of his subjects, by settling differences between subjects, by co-ordinating defence and in fact by being a unique personality in the area, the chief became the symbol of unity of his tribal group. The symbolism was clearly noticeable on the death of a chief when a short period of social disorganisation called *cipinimbe* followed. The members of the chief's village were allowed to pillage and to commit rape and other criminal acts without suffering legal action. The demise of the symbol of unity was followed by a period of disunity before the appointment of a successor restored the status quo.

622
[769]

At the same time much of what has been said about the chief was true also of important village headmen. Village headmen also made sacrifices to their ancestors but only in domestic or village affairs. They too built up their prestige by slaving. Many villages in Southern Nyasaland to-day

622 are composed of the descendants of slave-wives
of village headmen in days past. Like the village
643 headmen the chief was considered to be in danger
622 from contact with death. He could not attend
the funeral of commoners, he could not eat the
761 chicken which was brought to him at the announce-
ment of the death of a commoner (for a village
[753] headman) or subject (of a chief). Should he do so
he would suffer from a disease called ndoda. Also
village headmen, like the chief were supposed to be
well versed in medicine and were regarded with
some awe on this account. The chief and the
village headmen were distinguished from the
commoners in these ways.

643 But, the chief himself was a village headman.
622 He had to administer the affairs of his family
692 group and slaves as had other village headmen.
He was involved in the struggle for power going
on around him because he was not lifted above
these secular struggles as was, for example,
the Zulu King.[1] Duff MacDonald records for
example: "In a dispute between the inhabitants
of different villages, the respective headmen
represent their own subjects, and the chief is
appealed to. All his decisions are final. Still
the chief may otherwise have less influence
than a powerful headman, and we have known
cases where he simply consumed himself with
grumbling when his headman acted contrary
to his desire; and in many criminal trials he is
eclipsed by the sorcerers and pounders of poison."[2]

643 Again, MacDonald records how the chief tried
622 to entice subjects away from a village headman
at a trial by pointing out that the village headman
had a poor character and was unsuitable to look
after people.[3] While there seems to have been
some evidence that a number of village headmen
under a chief acted jointly in the face of a common
danger, but apparently with no powerful mili-
tary organization. Village headmen seem to have
been almost entirely autonomous in their actions,
slave-raiding on their own, even raiding villages
who paid tribute to the same chief as they did.

R:Mitchell E-5 (1946-1947) 1949 FT7 Tao FT7
[P.143C]

[illegible]

[illegible] See Max Gluckman, "The Kingdom of the Zulu of South Africa" in M. Fortes and E. E. Evans-Pritchard ed., *African Political Systems*, (London: Oxford University Press, 1940), p. 26 et seq. The Zulu king had an immediate brigade but represented the military regiments about him so that he could use them or destroy his rivals.

[illegible] Dom MacDonnes (1933), Vol. I, p. 101.

643 There is little doubt that village headmen did
622 wax in power and finally break away to form the
578 nucleus of a chiefdom of their own. The chief that a headman had left could do little to regain his lost subject and he had to rule not by tyranny but by tact. Duff MacDonald, for instance, records: "When a quarrel arises between the chief of the country and an important headman the latter may rebel and found a new kingdom, thus depriving the old chief perhaps of one-third of the villages in his dominion".[1] Nkonde is an example. "Nkonde of Chewondo was at first a headman of Kumpanu's but rebelled and lives on the Southern side of that mountain an easy day's march from Blantyre."[2]

643 The leader was known, and is still known to-day, by the term *anyaw cilando*. This might be translated as "owner of the country" but the term "owner" in this context would be a mistranslation. I prefer to translate this phrase as: "The person with whom a certain area is identified".[3] Hence when a man says, as the Yao do: "I come from Kawinga's", he does not mean that the land is owned by Kawinga, but that Kawinga is the most important man in that area.

645 Among the village headmen in the area under a
631 particular leader there were a number of trusted
692 village headmen called *ndunu*, which term I
622 have translated as "councillors". These councillors had special duties to perform. They were in the nature of governors in outer areas and each had a number of other villages under his jurisdiction. By this I mean that these villages were supposed to take certain cases for trial to him and to approach the leader through him. The councillors were supposed to visit the village of the chief each morning and to report anything untoward. The councillors also had the important duty of advising the chief, particularly in connexion with raiding of neighbouring tribes. Councillors also arbitrated in the domestic affairs of the chief and in the all too frequent conflicts between the chief, his sister's sons and his younger brothers.

B:Mitchell K-5 (1946-1947) 1949 FT7 Yao FT7
[P.144C]

[1] Orme MacDermott (1962), Vol. I, p. 137. [2] Orme MacDermott (1962), Vol. I, p. 32.
[3] Cf. G. Wauters, "The Political Organization of the Basin of Kivu-north" in M. Fortes and E. E. Evans-Pritchard ed., *African Political System*, at p. 216: "The Luguli term *umwami* refers both to 'ownership' of objects and of persons. In addition of objects, from our concept of ownership in several respects. Thus the *umwami* (owner) of a person is the one who has not only the foremost rights over him but also the foremost obligations towards him."

W3
622

643 I feel, was not due to a break-up of the chief's
175 power but rather to a breakdown of domestic
648 slavery and the system of sanctions that lay behind it, thereby freeing slaves who started setting up their own homesteads. It illustrates that the social system was fundamentally disturbed by the changes wrought by British domination as early as 1903.

643 This process continued until the Administration
622 saw fit in 1912 to introduce legislation to prevent further splitting up of communities and to give
175 a certain amount of power to "paid native local
648 authorities . . . who shall be responsible to the District Residents for the good order and administration of their villages or areas." [3] Hence with the passing of the District Administration (Natives) Ordinance 1912, the Administration began to recognise the indigenous political functionaries and to absorb them into the general political machinery of the Territory. In this Ordinance, village headmen were recognized as possessing a certain amount of power over the people who lived in their villages. Amongst the village headmen one was to be recognised as a Principal Village Headman. The Ordinance made it clear that the position of the Principal Village Headman was in no way to be regarded as similar to the old tribal position of chief. Though the Ordinance further warned that persons who were formerly chiefs were not necessarily to be appointed Principal Headmen, it should be noted that many Principal Headmen were in fact such people. Thus, in 1912, the leadership position of certain headmen in the Territory, though always recognized by the Africans themselves before that date, was further officially recognized and they were given specific powers by the British. "Residents were to indicate carefully by their attitude towards, and dealings with, Principal Headmen the fact that they were officially recognized as chiefs in their respective sections and that, as such, they were entitled to the respect and obedience of their people." [4] Nevertheless it was planned to have a structure

[text continues top of p.149A]

643 in which the District Commissioner would be
622 the real authority with the Principal Headmen
175 as his subordinates, to carry out certain well-
648 defined duties under his instructions. The Principal Headmen were expected to assist in the concentration of the huts in accordance with the new regulations concerning village headmen and the villages they controlled. Measures for the sanitation in the villages, sweeping and cleaning of villages, the construction of refuse-pits and latrines, were included in the Ordinance and the responsibility for this devolved upon the headmen. Village headmen were also expected to report crimes, abnormal illnesses and deaths, and so on. A clause specifically stated that no power to hear

[TEXT CONTINUES TOP OF P.149B]

IV. THE PRESENT POSITION

643 In order to illustrate the structure of the political
175 divisions with which we are dealing, I shall
648 outline the make-up of the three districts under the Native Authorities Kawinga, Liwonde and
131 Nyambi (see accompanying map).

It will be recalled that Kawinga and Liwonde trace their descent from a single ancestress three generations back from the present Kawinga and five generations back from the present Liwonde. The groups under the leadership of these two brothers Liwonde I and Kawinga I, entered Nyasaland in the early part of the nineteenth century and after various campaigns in Mount Mangoche area migrated across the Shire River at Mvera and took up their position on Kongwa hill. Here the second Kawinga died. Shortly after this the groups were displaced by Ngoni raids and they recrossed the Shire River and moved southwards to displace another Yao chief, Malemia, from Mount Cikala (near Zomba), which stronghold Kawinga held until they were displaced by the British attacks in 1895. Liwonde at first occupied the neighbouring range Ceni but soon moved down to the Shire River. He too was displaced by British attacks and fled with Ka-

[TEXT CONTINUES MIDDLE OF P.149B]

643 and determine petty native cases was conferred upon the headmen, though the District Commissioner was supposed to seek their advice when necessary.

622 175 648

Therefore, from the time of conquest a pattern of superordination of the Whites and subordination of the Africans was established and the indigenous political system remained largely without official recognition until the Native Authorities Ordinance was passed in 1933. The major change wrought by this Ordinance was that Native Courts were planned and instituted by the Native Courts Ordinance of the same year. At the same time a Native Treasury was founded.

IV. The Present

POSITION

643 wings to Portuguese East Africa. They were allowed to return later and they took up their positions in an area roughly outlined in the early part of this paper. At the same time, owing to military action by the Portuguese a certain number of refugees were crossing the border into the Lake Ciuta area of Nyasaland.

175 648 131

TABLE I

Demographic Composition of Political Areas[1]

162 643 631 [563]

Sub. Area	*Tot. Pop.*	*Admin. Vills.*	*Av. Pop. of Admin. Vills.*	*Tribal Composition*			
				Yao %	*Ngoni* %	*Nyanja* %	*Lomwe* %
N.A. Kawinga (Yao)	23,087	311	74	51	37	10	2
S.N.A. Cambe (Yao)	5,119	61	84	72	20	7	1
S.N.A. Mpona (Yao)	4,411	60	74	49	19	32	—
S.N.A. Chiwalo (Yao)	2,202	19	116	80	15	5	—
S.N.A. Ngokwe (Mpotola)	2,868	21	136	16	43	40	1
S.N.A. Chikwere (Mpotola)	7,102	49	145	28	56	16	—
N.A. Liwonde (Yao)*	12,716	106	120	75	20	5	—
N.A. Nyambi (Yao)*	7,335	63*	116	73	27	—	—

8:Mitchell E-5 (1946-1947) 1949
[P.157A] FT7 Yao FT7

643 to bear on his sub-chiefs. For example, when
648 one sub-chief mishandled a prisoner, the chief did not feel himself to be in a position to reprimand the sub-chief. He reported the matter to the District Commissioner. Another had expressed displeasure at the conviviality of the sub-chief with an Nguru man. He had given instructions that the one Nguru with whom the sub-chief was on intimate terms, should be beaten if found together with the sub-chief again. The sub-chief merely countermanded the ruling and nothing further was done about it. When one of the chiefs was to be given a medal by the Governor it was only with great difficulty that the sub-chiefs could be induced to attend the ceremony. One of the sub-chiefs said: "Why should my feet get sore walking to his capital? He's getting the medal, not me". The Native Authority of his own account has not sufficient authority to reprimand a S.N.A. and where this must be done he must call in the District Commissioner to do it.

4. *The Village Headmen and the Villagers*

622 A District Commissioner once referred to the village headman as "the lance-corporal of the political system—doing all the work and getting all the kicks". This description is an illuminating one. The population in the area is distributed in hamlets of mainly matrilineal kinsmen usually composed of a man and his female matrilineal relatives and spouses (see p. 142). The male leader of this group I call a village headman but this should not be confused with the social personality here called the Administrative village headman. For purposes of the Administration, villages and hamlets are grouped under officially recognized and remunerated village headmen. Administrative village headmen usually have some local standing. Some have the right to wear the red band which distinguishes rank, some have the right to conduct initiation ceremonies for both boys and girls, they are all given the greeting correct for people of some rank, they are referred to by a term which signifies both the chief and the village headman (*mwenye*).

The administrative village headman has certain duties which he must perform in respect of his

622 Administrative village. The N.A.'s bureaucracy considers him responsible for the collection of the taxes though, of course, the legal responsibility rests on the tax-payer. The village headman is generally responsible for the various regulations that the villagers must carry out. In practice the Administrative village headman may be in charge of a single kin-group and thus have a certain amount of control over the villagers because of his kinship with them. More frequently, however, the Administrative village headman is also in charge of a number of other hamlets, sometimes completely unrelated to him but who happen to have been assigned to his jurisdiction. He then delegates the responsibilities to the headmen in charge of the hamlets.

622 554 The Yao judge rank among the village headmen largely in terms of historical antecedents and by the number of dependants that a village headman has. While a certain village headman may be ranked fairly highly in the status system because his ancestors were closely associated with the ancestors of the chief, he may not now have many villagers around him. A newcomer to the area however, can only become notable by acquiring sufficient followers to make him a man of considerable power. Associated with rank are the various insignia that I have mentioned, i.e. the right to hold initiation ceremonies, the right to wear a red band round the head, etc. The competition among village headmen therefore, is phrased largely in terms of competition for these particular insignia of rank. They strive to be recognized as Administrative village headmen—"to have a book" as they say, since this at once means that they will receive a remuneration for work which they would have to do anyway, and it also means that they would be recognized as village headmen in the eyes of the White Administration. Village headmen also compete with each other to have the right to hold initiation ceremonies and use the threat to move out of the chief's area to bring pressure to bear on him to force him to grant the right.

692 While domestic quarrels are usually settled by the kin-group leaders and by the husband's and wife's parties conferring together, differences out-

8:Mitchell E-6 (1946-1947) 1949
[P158B] FT7 Yao FT7

692 of White values which coincide with their own.

692 Informants say that the position of the village headman in contrast with that of the chief is
643 getting progressively weaker. They maintain that cases once tried by the village headman are
622 now taken to the chief's court. Whether this is true or not is difficult to ascertain. The fact that there is some sanction on the guilty party to settle the compensation if he is tried in the chief's court, probably pays a part. The compensation awarded is recorded in the Court Case book and the chief is empowered to keep a man under remand until it is paid. The chief sometimes supports the village headman against recalcitrant subjects. A man once refused to pay a compensation awarded against him by a village headman. The village headman referred the case to the chief who said to the man: "As you have disobeyed the order of the village headman it means that you have insulted me, the District Commissioner and the Governor". But in general there is a tendency for the central authority to be strengthened and the chief emphasizes his relationships to the White Administration in order to consolidate his position of dominance over his headmen. At a succession ceremony of a village headman the chief who had supported an unpopular candidate said: "This man has been chosen by me and the Governor agrees with me". Clearly in this insecure situation the chief saw himself against his subjects, and as part of the White Administration. He uses his power in this political situation to establish a dominance over the headmen, that he could never have established before the White men came (see p. 144).

VI. General
SUMMARY

642 depends on the field of values in which the inter-
177 action is taking place. To illustrate this with a simple example, when the court messenger exacted a levy of 1*d.* from each garden-owner in the area where the sacrificial cloth had been stolen from the tree-shrine, they saw in him a

10: Sanderson D-5 (ca. 1920)1922 FT7 Yao FT7

796 THE WHOLE VILLAGE IS THOROUGHLY 'SPRING-CLEANED', ALL RUBBISH
[364] is swept up, the ground round the houses is hoed clean, and the interiors remudded. Ceremonial beer is brewed by the head-wife of the chief, and after this has been drunk the ashes of the fire used in the brewing are carefully collected and taken to a *malekano* ("cross-roads," or "diverging of paths") where they are deposited.
[783] The chief, as representative of his people, bathes in special medicated water, a
[624] decoction made from the bark of *ng'ewanja* and *mbawa*, and the root of *mpingu*.
[621] This completes the ordinary annual ceremony, at which new fire is not made.

On certain special occasions a more elaborate ritual is carried out; such occasions are the death of a chief, a threatened epidemic of infectious disease, a murder (especially by shooting) and the frequent occurrence of quarrels in the village.

In such circumstances, in addition to the ordinary *pyujila* ceremony described above, the porridge sticks of the whole village are renewed and all fires extinguished. The discarded sticks and all ashes of the old fires are carried to the meeting of paths, where the former are stuck upright in the ground and the ashes piled together;
[372] this is done in procession, all the people taking part. On their return to the village new fire is made by friction by either the chief or his younger brother—usually the latter; fire procured in any other way would nullify the proceedings. Finally
[783] all the people bathe in the medicated water used only by the chief at the ordinary ceremony.

951 In addition to this special form of the *pyujila* ceremony, another rite is sometimes
796 performed after the occurrence of a murder or as prophylactic against the spread of epidemic disease. The doctor first makes a kind of trough (*lakungwa*) from the bark of *mtandawalo* or *mpapa*, and procures a *chichiliko* (or *chipengule*) basket—used as a strainer in salt-making. Having collected his medicines he proceeds to the bank of the stream near the usual bathing-place of the village and digs a shallow hole, in which he places the basket; in this he puts the leaves of a certain thorny shrub and covers the whole with the trough, which is banked up with earth so as to be perfectly firm. He then puts his "medicines" into the trough; these are, first, the head of an iron hammer and a piece of slag, both from a smelting furnace. On top of these he puts pieces of the root of a certain tree which has many and particularly sharp thorns, and bits of bark from two trees peculiar for having very straight stems. Having distributed these evenly along the floor of the trough, he fills it with water and then proceeds to construct an arch over the end of the trough furthest from the stream. Two long poles, cut from a kind of tree particularly rich in sap, are planted in the ground, one at each side of the trough and close to it; these are bent over towards each other, and fastened together by means of a strip of their own bark. A bamboo is now planted alongside each, and similarly tied to its fellow. During all these preparations and throughout the ceremony it is essential that the doctor has no knots in any part of his clothing.

The preparations are now complete, and when all the fires in the village have been extinguished the people go in procession to the spot where the doctor awaits them. All must be poorly clad and must have no metal about them.

[622] The chief opens the ceremony. He steps into the trough and taking some of the medicated water therefrom in his hands he rinses his mouth with it. He then
[769] offers a prayer to the spirits of his ancestors, first stating the emergency and detailing the measures which are to be taken to deal with it (new fire, sweeping, discard of porridge-sticks and shaving). The prayer over, he splashes the water in the trough over his body and passes through the arch, first throwing some gift (beads or, in more modern times, money) into the trough. These gifts, presumably
[756] intended as an offering to the spirits, are the perquisites of the doctor, and everybody is supposed to contribute in turn.

2: Mitchell E-5 (1946-1949) 1956 FT7 Yao FT7

strike out with his adherents to found a new village. A sum of £6 or £7 is a considerable amount in everyday Yao life where the annual cash income of the average individual is not much more. The leader of a dissident group is prepared to forgo this wealth to get one foot on to the lowest rung of the political ladder—that is by becoming a village headman. 621 166 627

Obversely there is a great deal of sentiment attached to the idea of a united village. To the Yao way of thinking a village is broken by fighting or death, and these evils are linked by witchcraft beliefs. The association of death and the break-up of the village is brought out clearly by the funeral ablutions of villagers after the burial of one of their number. An important ingredient in the medicine with which the mourners wash themselves after the funeral, is *cikula*. It is the earth from a particular type of termitary which is usually about 12 to 18 inches high, upright and almost cylindrical. The crust is very brittle and it is comparatively easy to chip off a piece. When this is done a mass of internal chambers and passages is revealed. The soldier ants, unlike those of other species that retreat into the darkness of their passages as soon as they are exposed, come into the open daylight and swarm in confusion over the fractured termitary. When I questioned my informant about *cikula*, he kicked the crust off the top of one of the hills and said, 'See all the houses in the village of the ants? I have broken their village. So it is with death. It breaks the village.' 621 764 783 825

The Yao believe that death 'breaks the village' and that conflicts through sorcery lead to death. Therefore, conflicts are the real cause of village splits. Hence differences must be settled immediately if the village is to persist, because if they last too long one of the aggrieved parties is sure to start using sorcery against its opponents. Those who do move away, go to a distant place because they believe that sorcery operates only where there is social interaction. But the fear of sorcery on the other hand is just as strong a force in maintaining the physical unity of the village. It is while the migration is being planned that sorcery is most likely to be used. This is particularly so if the village break is taking the form of a lineage split. This happened, for example, in Lupunje village. 621 754 626

Kalambo, the sister's son of Lupunje, wanted to leave the village and had gone to seek a suitable site. When he returned he found that 621 626 753

2: Mitchell E-5 (1946-1949) 1956 FT7 Yao FT7

621 his mother was ill and had gone with Lupunje's younger brother to
●626 the diviner to find out the cause of the illness. The diviner indicated
753 that Lupunje thought that Kalambo was not showing him the proper respect. Lupunje knew that his sisters had lost their value in the lineage since they had stopped bearing children, whereas Kalambo's sisters were still reproducing. His malice had caused the woman's illness. When Kalambo got home he asked his mother's brother to blow water out of his mouth [1] and help him to prepare some medicine for the sick woman. This Lupunje did and the woman recovered immediately.

Shortly afterwards Kalambo remonstrated with his mother's brother for causing the illness of his sister, but Lupunje said that he had no control over it: the spirits had brought it on her. Kalambo knew that he could do nothing and abandoned the idea of building his own village. He knew that there was bound to be more illness if he carried on with his plan.

182 Clearly the belief in the mystical powers of the ancestors or of
621 sorcery is a force which prevents sections from breaking away
626 from the village. A break follows only when opposition within the village has reached sufficient pitch to force one of the sections to take the risk of illness, rather than to continue living in the village. Sometimes the dissident group comes back because further deaths at their new village site convince them that their action was wrong.[2]

Effects of the Headman's Personality

622 Whether a village maintains its unity or not, depends very largely on the personality of the headman. This is why the officiating headmen and others at the installation ceremonies are so insistent that cases should be settled quickly. The main duty of a headman is to maintain harmonious relationships within his village and to see to the welfare of its members. All severe
[787] illnesses are immediately reported to him, and so are the results of all divinations. He usually sends his representative to divina-
[764] tions concerning kinsmen not related to him matrilineally. He is immediately notified of all deaths and he organizes the funeral rites. Squabbles are brought to him for arbitration and even
622 where squabbles are settled by kinsmen in the village, usually the
692 headman is formally told of them. Frequently marriage diffi-

[1] An act which recants malice. See Chap. VI, p. 139.
[2] See the case history in Chap. VI, p. 153.

2: Mitchell E-5 (1946-1949) 1956 FT7 Yao FT7

disease *ndaka*.[1] This disease, as we have seen, affects the sexually inactive when they are brought into contact with those who are sexually active. But the disease will only affect the members of the matrilineage of the errant person. For example, suppose a labour migrant is coming home from Southern Rhodesia and has, among other things, a few pounds of salt in his baggage for a gift to his relatives. Suppose also that while he is returning he has promiscuous intercourse. The salt becomes charged with sexual heat and if he gives it to any of his matrilineal relatives to cook with, they will contract this disease. He must therefore give the salt to members of another matrilineage, even if they live in the same village. 613 753

It is when the unity of the matrilineage is threatened, by either death or division, that its mystical value appears most clearly. When a member of the matrilineage dies the whole matrilineage is thrown into mourning and remains continent for three days. On the fourth day they perform a ritual purification and some members resume sexual relations, but the closest matrilineal relatives, such as the mother and uterine siblings, remain continent for the remainder of the mourning period, which is about 36 days. 613 765 834

It is tension within the lineage which is most closely attended by dire results. The most important reflex of this tension is accusations of sorcery. Good relationships among members of a matrilineage are adjured, mainly because friction opens the way to sorcerers. The Yao believe that sorcerers kill their matrilineal relatives so that they may share the flesh with other sorcerers. The sorcerer is fundamentally a wicked person and may kill any relative but is more likely to kill those whom he hates. Hence it is most important that relationships are kept amicable within a matrilineage for fear that sorcery ensues. 613 626 754

An interesting variation of the dangers of sorcery is the belief that sorcerers take the opportunity of squabbles within a matrilineage to kill one of the members. The rationale behind this is that the diviner's instruments are unable to detect the origin of the sorcery beyond the immediate cause. A diviner will indicate that the cause of death of, say, a child is sorcery, but that the witch is obscured behind the quarrelling words of some relative. Consequently, danger to a matrilineage ensues when one of its 613 754 578 626

[1] See Chap. V, p. 112.

2: Mitchell E-5 (1946-1949) 1956 FT7 Yao FT7

613 members goes to an outsider and grumbles to him about the
754 family squabbles[1] and quarrels. The outsider then takes the
578 opportunity of using this squabble to introduce his sorcery into
626 the lineage. The Yao greatly fear backbiting because of their dread of sorcery and none dreads it more than a village headman, a warden of a sorority-group,[2] or a person in the position of having to keep a matrilineage or section together. These people are continually adjuring the women under them—for it is the women who are believed to be the main culprits—not to fight among themselves; and if they do, not to take their complaints to an outsider but to the senior member of the matrilineage. The significance of this in relation to lineage unity is plain enough.

613 Apart from sorcery, strained relationships between members of
578 a matrilineage are believed to be dangerous for other reasons.
843 Malice may adversely affect people who are in mystically danger-
224 ous states. The most common of these states is pregnancy. If a woman has a quarrel with a matrilineage member while she is pregnant she is likely to have a difficult labour. The Yao say 'the womb has heard these bad words'. Another situation where malice or quarrelling will cause difficulties is in hunting. The luck of the chase is capricious and malice may easily bring bad fortune to an otherwise good hunter. For example, a successful hunter once gave each of his two sisters a piece of venison. Each complained that the other had been given the larger piece and quarrelled vehemently about it for weeks. The hunter now found that no game fell into his traps. He went to a diviner who indicated the quarrel of the sisters as the cause of his failure and told the hunter to get them to 'blow water' (*kupesya*). He did this; good relationships were restored and his traps were filled once more.

613 These deleterious effects, like the curse, are connected in some
578 way with the ancestor spirits. This is sometimes expressed quite
769 clearly when a person is called upon to 'blow water'. A
755 mother who wishes to revoke a curse, a woman who wishes to recant her malice towards her matrilineal relative who is suffering in childbirth, or a man whose sister's son is ill supposedly because

[1] This is called *mseri*, which I have translated as 'backbiting'. This idea is extremely important, as we shall see later.

[2] i.e. those men who are responsible for their sisters and their descendants. See p. 145 ff.

2: Mitchell E-5 (1946-1949) 1956 FT7 Yao FT7

of his malice towards him, might equally be called upon to do this. The person makes a statement to the effect that he bears no malice and hopes that the sufferer will be well. For example, a woman in Cikoja village who was called upon to 'blow water' during the labour pains of her mother's younger sister's daughter's daughter,[1] because they had quarrelled over a sifting basket, put some water in her mouth, spat it out and said: 'Those words I spoke: the basket is mine. This is my child. Both are mine. When I spoke and asked my child about it, they were not words to place in my heart, so that to-day we should have to go to the diviner because my child is hitched[2] and be accused because of the sifting basket. These words I push aside. I do not know whether there are other words that we fought about, but if they are these, my daughter's child come out!'[3] Sometimes the ancestors are specifically invoked, '*Conde, conde ilamasoko* . . .' 'Please, please, O spirits . . .' This is a public confession of the tension within the lineage and it allows the lineage leaders to attempt to straighten out the difficulties, as they did in this case.[4]

These beliefs in mystical dangers of one sort or another which beset the matrilineage as the result of bad feelings within it, have the effect of constraining matrilineage members to maintain peaceable relations among themselves and are, therefore, conducive to maximum solidarity.

It is clear from MacDonald's writings that in earlier times the periodic offerings to the spirits of the ancestors was a valuable way in which the solidarity of the matrilineage was expressed. With the introduction of Islam and Christianity these sacrifices have disappeared. I have not worked in Christian areas long enough to be able to say whether the ancestor cult still persists. In the northern area, however, I can say that the ancestor cult survives as part of the practice of Islam. Periodically, feasts are held in

[1] See the history of the division in Cikoja lineage, pp. 165-6.

[2] *Kukolekwa*, i.e. the child cannot be born.

[3] *Une malolegela ciele cile cangune. Aje muwanuga. Yenepe yangune. Pinuwertaga nikuwaya, kumbwaya muwanuga, nginiwa malolo gakwika kunima, gati ngaku lele nikuwenda kuciunga cakolekwa muwanuga nikunkumula une ligonga lya ciele. Cikuyo ngumtuke. Kwalini ungapali gati gituwa kungamla numbo ungapaga malolo gakwa, cimkula cangu cikopuwa.*

[4] I have drawn attention to the cathartic effect of accusations of sorcery and public confession of guilt in a paper, 'A Note on the African Conception of Causality', *The Nyasaland Journal*, v, 2 (July 1952), 57-8.

11: Sanderson D-5 (ca. 1920) 1920 FT7 Yao FT7

The alternative term, *wow*, common to nearly all Bantu languages, is usually reserved for "own father," but not always. 601

Latterly, though the relationship is really always, the husbands of a man's "daughters" or "grand-daughters" are called *atati*—in a complimentary sense, not of course in defining relationship.

The word *abuye* is rapidly falling into desuetude for men, and is, nowadays, never used in speaking to a man of that relationship, though used freely as a mode of address to women.

Anaso (or *ambidu-anaye*, *-wow*, etc., "my, his mother") may be further defined as "great" or "little" in the same manner as *atati*.

The parents of any *atati* or *anaso*, and those of one's wife are called *anbuje* ("grandparent"). Great-grandparents are specified as "father" or "mother of my grandfather (or mother)."

The founder of a family is called *Likolo*, especially in prayer—except for the representative gods obviously the same word as *Nyapolo*," a parent," which includes all "fathers" and "mothers." [illegible]

It is curious in this connection that a name for little girls in general, if one does not know their real name, is *ahibdo*. All these words seem to be derived from *-hide* ("have," "possess"), and refer, probably, either to actual or potential possession of offspring.

Ashinanpolo are distinguished as "male" or "female" according as they belong to the father's or mother's side—irrespective of their own sex.

Conclusions.—The Yao nomenclature of relationships, bearing as it does the evidence of former group marriages, is, like other classificatory systems, gradually changing in conformity with the development of the race, so that it can be used to express consanguinity; Rivers has, I believe, called attention to this process. 601 195 [illegible]

The Yao custom—now dying out—of lending one's wife to a visitor (usually a close friend) may be a remnant of ideas carried on from communal marriage, though such a privilege is never given to a relative. [illegible]

In the same way's man who has had no children (a great stigma) may request his friend to help him—he will never ask a relative—and all of the three parties will keep the secret of the true paternity of any children resulting. [illegible]

In many tribes the marriage of brother and sister, or a man with his sister's child, is permitted to compensate for the law by which a man's property goes to the son of a stranger, but nothing of the kind is allowed among the Yao. Indeed, they view any incestuous union with particular horror, and such must be very rare. I have heard of a case of a man committing incest with the idea that he would thereby become endued with supernatural power, but all he gained was ostracism; in the old days he would have been burned. 595 [illegible]

2: Mitchell E-5 (1946-1949) 1956 FT7 Yao FT7

of sorcery, but the representative takes no part in the proceedings at all; he is outside them and is there merely to see that affairs are conducted fairly.

The Value Attached to the United Village

The third aspect, the dominant theme in all speeches, is the emphasis on the position of the headman as a leader of a corporate group, and his duty to maintain its unity. The chief and the officiating headmen warn the successor about the possibility of conflict in the village. They advise him to settle differences at once lest these should lead to a split in the village. They also warn him that his wife's relationships with her sisters-in-law, living as she is, virilocally,[1] are a danger point and may lead to trouble. The danger from the 'husbands' who are members of other villages and whose loyalties do not lie directly with the new headman is made manifest to him. At Nyenje's ceremony the officiating headman remonstrated with Nyenje's sisters because some had left the village without giving him an opportunity to settle their differences. The frequent references to the danger of sorcery are also references to the fear of the breakdown of the village. The villagers are exhorted to respect the headman and to be obedient to him for the general welfare of the group as a whole. Regularly the image of the tree and its branches is invoked, and it is made clear that the headman is dependent on his people for his rank and status, and they on him for their unity.

The disintegration of a village in Yao eyes is a sad affair and the disruptive forces in it must be very strong before a section leaves it. People who want to leave a village are usually remonstrated with and told not to 'break' it. In the frequent conflicts between the headmen and their younger brothers the arbitrators usually try their utmost to prevent a migration. They always award compensation to the injured party and tell the disputants to live in peace, and not to leave the village. Frequently, however, the leader of the dissident group prefers to refuse the compensation money, which is often as much as £6 or £7, and

[1] i.e. living with her husband's kin. I use 'virilocal' and 'uxorilocal' in preference to the older less ambiguous terms 'patrilocal' and 'matrilocal'. See Richards, 'Some Types of Family Structure amongst the Central Bantu', 208-9.

2: Mitchell E-5 (1946-1949) 1956 FT7 Yao FT7

strike out with his adherents to found a new village. A sum of £6 or £7 is a considerable amount in everyday Yao life where the annual cash income of the average individual is not much more. The leader of a dissident group is prepared to forgo this wealth to get one foot on to the lowest rung of the political ladder—that is by becoming a village headman.

Obversely there is a great deal of sentiment attached to the idea of a united village. To the Yao way of thinking a village is broken by fighting or death, and these evils are linked by witchcraft beliefs. The association of death and the break-up of the village is brought out clearly by the funeral ablutions of villagers after the burial of one of their number. An important ingredient in the medicine with which the mourners wash themselves after the funeral, is *cikula*. It is the earth from a particular type of termitary which is usually about 12 to 18 inches high, upright and almost cylindrical. The crust is very brittle and it is comparatively easy to chip off a piece. When this is done a mass of internal chambers and passages is revealed. The soldier ants, unlike those of other species that retreat into the darkness of their passages as soon as they are exposed, come into the open daylight and swarm in confusion over the fractured termitary. When I questioned my informant about *cikula*, he kicked the crust off the top of one of the hills and said, 'See all the houses in the village of the ants? I have broken their village. So it is with death. It breaks the village.'

The Yao believe that death 'breaks the village' and that conflicts through sorcery lead to death. Therefore, conflicts are the real cause of village splits. Hence differences must be settled immediately if the village is to persist, because if they last too long one of the aggrieved parties is sure to start using sorcery against its opponents. Those who do move away, go to a distant place because they believe that sorcery operates only where there is social interaction. But the fear of sorcery on the other hand is just as strong a force in maintaining the physical unity of the village. It is while the migration is being planned that sorcery is most likely to be used. This is particularly so if the village break is taking the form of a lineage split. This happened, for example, in Lupunje village.

Kalambo, the sister's son of Lupunje, wanted to leave the village and had gone to seek a suitable site. When he returned he found that

2: Mitchell E-5 (1946-1949) 1956 FT7 Yao FT7

part of the normal duties of a matrilineage leader to his kinsmen.[1] 613
But ideally each marriage is supposed to have two marriage
surveys. The first, or senior, survey is called *nkukwangwa*, which 561
was described to me as 'the log that lies at the doorway'. The 582
picture here is of a wise old man who cannot move around too
easily, but who sits at the doorway of his hut ready to give
advice and information to his younger kinsmen. In contrast to
this is the junior survey. He is called *ndyamawe* or the 'hunter
down of dew'. He is pictured as a young man, who is vigorous
about his daily tasks and who is waiting before the dew has
evaporated in the morning, at the door of couples who have
difficulties. He is essentially the 'one who walks about'.

The senior marriage survey is ideally supposed to be a mother's 613
brother, while the junior marriage survey is supposed to be a 561
brother. In fact, while the junior marriage survey is almost 582
always a brother, though not necessarily an elder brother, the 604
senior, for reasons which will emerge later, is frequently not a
mother's brother. However, in the Yao mind the two are fixed
in the relationship to each other as mother's brother and sister's
son. The fundamental conflict of their positions is expressed by
the opposition of the concepts of the 'recumbent log' and the
'active man'. This view is consistent with the segmentation
and internal differentiation that must go on within a lineage.
As the segments of the matrilineage become progressively
independent of each other, the senior relatives, who formerly
held them together, become less and less active in their affairs.
In Yao idiom they become 'recumbent logs'.

The relationship between mother's brother and sister's son 604
therefore is fundamentally ambivalent. By the values surrounding 627
the concepts of descent and relationship, a sister's son and
mother's brother are close kin and bound together in their
attachment to a common ancestry and to a common set of living
women who are in their joint care. At the same time the
mother's brother, belonging as he does to the parental generation,
must be respected by his sister's sons. Recalcitrant sister's sons
may be made to toe the line by a number of different sanctions.
A mother's brother, for example, may take his case to an
arbitrator and bring the force of public opinion to bear upon his

[1] I have described the rôles of the marriage surveys more fully in *Marriage among the Machinga Yao*.

2: Mitchell E-5 (1946-1949) 1956 FT7 Yao FT7

604 627 sister's son. This, however, is not common because matters such as these, the Yao feel, ought to be settled within the matrilineage, or at least among kinsmen. The more usual procedure is for the mother's brother to take his complaint to some senior matrilineal relative who may be a perpetual mother's brother of the mother's brother, as my Cibwana Kawinga is to Cikoja.[1] Or if the matrilineage is part of a village, the mother's brother may take his case to his village headman, who is as likely as not his perpetual father. The senior relatives have the force of authority and public opinion behind them and frequently some agreement can be reached at this level. Where this is not possible, say because the perpetual elder relative lives too far away, the mother's brother may take the sister's son to court and bring the sanction of the Native Authority's punishment upon him. This is very rare.

604 788 There is still a certain mystical sanction behind the mother's brother's control over his junior relatives. This is based on the curse, which in turn draws on the belief in common ancestor spirits. A mother's brother may say to a sister's son or other junior matrilineal relative: 'If you have never sucked from the breast of my sister, nothing dreadful will happen to you.'[2]

604 759 The fear of sorcery is another force which operates to control the wayward activities of a sister's sons. People in senior generations are usually looked upon as having particularly wide knowledge of potent medicines. Though a sister's son may sometimes use sorcery against his mother's brother, the reverse is believed to be more likely to happen. I have recorded elsewhere[3] the details of a case where a sister's son left a village, against his mother's brother's wishes, to find work in town. He subsequently met his death in an accident while trying to get the honey out of a wild bees' hive in a treetop. At home his death was attributed to the sorcery of his mother's brother whose will he had frustrated.

604 678 On the other hand the sister's sons, while bound by an ethical code to honour and respect their mother's brothers, find that in fact these stand in the way of their own personal ambitions. A man's heir is his sister's son and it is quite understandable that there should be some tension between a man and his heir. But

[1] See p. 150. [2] See Chap. VI, p. 135.
[3] 'A Note on the African Conception of Causality', 34-5.

1: Tew K-4 (no date) 1950 FT7 Yao FT7

expressed also in the speeches by the marriage sponsors. The couple are exhorted to 585
refer disputes to the sponsors, and to consult the diviner in case of sickness.[1] After the
rite these two sponsors have special responsibilities towards the couple; grievances
are referred to them, and they must be present when adultery cases are heard in
court. If the marriage witness ceremony has not been performed, the relationship is
not regarded as legal and no adultery compensation can be claimed by the husband.

Divorce used to be a private affair, which was merely signalized by one party giving 586
to the other an arrow as a token of separation.[2] Nowadays all divorce cases go to court.
The woman is usually asked to choose between her husband and the adulterer, and
the compensation paid to the former, if she decides to leave him, is higher—amounting
to about 10s. A man can be sent away from the village by his wife's kin, but if he
has given no grounds for divorce he can claim compensation and will also take back [587]
any gifts made to his wife. A few small gifts to his mother-in-law are not reclaimed.
Divorces are easily obtained and frequent. Grounds for the divorce of a man may
include failure to pay hut tax, one of the specific duties of the husband.

The custom of making a marriage payment is recorded by Johnston[3] (on the east 583
coast of Lake Nyasa) as a relatively new adoption. When given it is divided between 177
the bride's father, mother, and mother's brother and brother.[4]

Slavery

Domestic slavery was an important institution in the Yao social system. Slaves were 567
obtained by capture, purchase, or in compensation for injury.[5] A man would pay a
debt by giving slaves (wives or members of his matrilineal kin group) to his creditors.[6]
A man might voluntarily enslave himself to a man having charge of many women, as
a means of obtaining a wife.[7] The children of a free man and a slave woman were not
emancipated, as their father could not take them from the village of their mother's
master, who had the right to sell them.[8] Slaves took part in the ordinary life of the
village; women slaves ranked as junior wives of their masters and shared the usual
work of women. Men might be supplied with guns for hunting or might accompany
their masters to war, trade for them, spin, weave, sew, make baskets.[9] The institution [569]
of domestic slavery was an expression of a dominant motif in Yao culture—the association
of status with a large number of dependents. Its abolition by the British was in
itself a major blow to the prestige and authority of the chiefs.

Information about the social organization of the Yao in Portuguese East Africa is 184
scanty, but it is in agreement with what is known of the Nyasaland Yao; Heckel, who 602
knew the Yao in Lindi district, Tanganyika Territory, confirms the correctness of
Stannard's account of the South Nyasa Yao.

The Yao came into Nyasaland in small parties of kinsmen. Their experience and 775
their superior weapons soon enabled them to dominate the Nyanja among whom they
settled, and today they dominate the population of the Southern Province. They are
organized into loose groups of villages, under petty, independent chiefs. They seem [601]
[603]

[1] Stannard, A. 1901, p. 142; Hynde, 1899; Johnston, J. 1901, pp. 69-73; Macdonald, 1882, vol. 2; Werner, 1906, pp. 108-30.
[2] 1901, pp. 70-3.
[3] Stannard, A. 1901, p. 180.
[4] Stannard, A. 1901, p. 180.
[5] Werner, 1906, pp. 130-3; Stannard, A. 1901, p. 177.
[6] Stannard, 1901, p. 100 (not a reliable source).
[7] Macdonald, 1882, vol. 1, pp. 188-9.
[8] Werner, 1906, p. 173.
[9] Ibid.

1: Tew E-4 (no date) 1950 FT7 Yao FT7

never to have had any large-scale central political organisation, and their history is full of occasions when one group of Yao has attacked another. Even within his own area the authority of the chief was not, apparently, sufficiently strong to prevent one village headman from raiding his neighbours; the chief maintained no standing army.[1] The chief held certain rights and privileges. He was entitled to the ground tusk of any elephant found in his territory (the finder was rewarded after it had been sold, with a cloth); he received tribute in food,[2] with which he entertained visitors. He took a share of the spoils of war and was also entitled to annual labour service and to a gift when he made a new burial place. Apart from his military and judicial responsibilities, he had authority to settle when and where initiation ceremonies should be held.[3] The right to hold these ceremonies was sought after by the village headmen as a mark of status.[4] The chiefs or headmen of certain families had the right to wear a white cloth round their temples as insignia of rank.[5]

In addition the chief had a certain ritual status. He was thought to incur mystical danger by contact with death, and so was not allowed to attend a funeral nor to eat a chicken brought by a messenger announcing a death, nor to accompany his military expeditions. He was supposed to have great power through special medicines. He had to make offerings to the ancestors, especially in affairs concerning the whole people, such as drought or epidemic. He was expected to give a burial cloth at the death of an important man. At his death a period of social disorganisation was recognised, members of his village were allowed to pillage and rape, until he was buried.

Succession to the chiefly office was matrilineal. The chief's position was based partly on his status as the senior male of his own matrilineal kin group, partly on his wealth. His command over slaves, guns, and caravans to the coast was greater than that of others, and from these his military strength was derived, for a chief was powerless without his following of dependents. The chief of the area was also headman of his own village. In fact, the position and duties of a village headman (except that he could not exact tribute)[6] reproduced in small scale those of the chief. The headmen also were in mystical danger through contact with death and were the channel through which the ancestors were approached in affairs concerning the village. They, too, built up their prestige and wealth by slaving activities. They seem to have been largely independent of the chief, carrying on slave raids of their own, and if they could gain a sufficient following, they might break away from the chief, and set up their own chieftaincy.[7]

The chief ruled through a hierarchy of headmen. His councillors were superior headmen, placed over a number of village headmen. Commoners could approach the chief only through the councillor in whose area their village belonged. The councillor's special duties were to report daily to the chief on the affairs of his district, to advise, and to arbitrate in the chief's own domestic affairs, e.g. in conflicts between the chief and his brothers and nephews. The councillors were not necessarily relatives of the chief,[8] but were chosen on account of their general status in the community, and their

[1] Elmslie, c. 1899, p. 105, says of the Yao in the Shire highlands: 'Every tenth man one met might be set down as a chief . . . petty quarrels of petty chiefs were abundant. . . .' See Macdonald, 1882, vol. i, pp. 189 and 190.
[2] Stannus, c. 1922, says that only beer was owed to him.
[3] Ibid., p. 200.
[4] Duff, 1903, p. 310.
[5] Macdonald, 1882, vol. i, p. 18; Werner, 1906, p. 260.
[6] Macdonald, 1882, vol. i, p. 153.
[7] Ibid., pp. 30 and 156.
[8] Ibid., p. 156.

1: Tew E-4 (no date) 1950 FT7 Yao FT7

office tended to become hereditary. Each councillor had his own village which he administered as a headman. A second set of officials were the court assessors, *mapunge*, who, unlike the councillors, were not in charge of villages of their own in addition to their court duties. Their office was not hereditary and they were chosen for their wisdom and their debating ability. They lived at the court of the chief and their main duty was to sift the evidence in the judicial cases which came before him. 631 [692]

The village headmen were expected to send elephant tusks to the chief (receiving small gifts in return), and to invite him to a yearly beer drink. Like the chief, the village headman governed through a council of the most important men in his village. They constituted a kind of village court over which he presided, and in the old days he could give capital sentence, or award a fine of as many as four slaves. Appeal from his decision lay to the court of the superior headman, or to the chief. Important cases would be reported direct to the chief. Most crimes would be settled by compensation. In cases of murder, several slaves were paid to the kin of the victim, and a fine for spilling blood to the chief. When compensation was handed over, the recipient always returned some part of it as sign that friendship was restored.[1] [651] 631 692

Macdonald's further account of the treatment of crime shows how weak was the political organization, in spite of the apparent orderliness of the system of inferior and superior courts. A murderer caught red-handed might be killed at once. If captured alive he might be ransomed on payment of a fine of from four to twenty slaves, some of whom might be killed to accompany the dead. If the murderer escaped a relative of his would be captured and ransomed. This applied to murders occurring among parties friendly to one another and living in the same village. If the murderer was from another village, the injured village, if strong enough, would fall upon the other and kill and enslave the inhabitants. If not strong enough, the chief might be called in to help to annihilate the guilty village.[2] 696 [567]

MODERN ADMINISTRATION 631

In the whole of Nyasaland there must be between thirty and forty Yao chiefs. In the districts of Liwonde, Fort Johnston, and Zomba, where 60 per cent. of the Yao population is concentrated (1931 boundaries), there are at least fifteen such chiefs. Not all those who have the rank of chief in the old Yao system are recognized as Native Authorities or even as Sub-Native Authorities by the Nyasaland Administration, and many Sub-Native Authorities would be full chiefs in the Yao system, and quite independent of the Native Authorities under whom they are placed. 622 178

Nowadays the chief has lost many of his former claims to status. He no longer has monopoly of the trade to the coast, for goods are brought in by Indian traders and bought by African tobacco growers or returned labour migrants. He can no longer use his slaves to increase his wealth by running slaving expeditions. His tribute of food and ivory has ceased, and he can no longer entertain lavishly, but he is still expected to give burial cloths and to make gifts to headmen on their succession to office. Some of his councillors have been made court assessors, and are paid for those duties, but others are expected to work for him unpaid. Some chiefs do reward councillors who retain their traditional status but are not officially recognized as assessors by the

[1] Macdonald, *ibid.*, vol. i, pp. 156-8; Swanson, *a.* 1962, p. 270.
[2] Macdonald, *op. cit.*, pp. 159-61.

1: Tew E-4 (no date) 1950 FT7 Yao FT7

Administration, but many cannot afford to do this. The people regard the taxes they pay to the Administration as a substitute for the chief's tribute. As the Native Authority the chief appears to be responsible for tax-collection, as the tax-clerk lives at the court.

The chief is responsible to the Administration, among other things, for latrine construction and for punishing the infringement of various regulations. His main duties are judicial, as judge of the Native Authority Court. The bureaucracy attached to the Native Authority includes a number of functionaries, e.g. Kawinga's, in 1947 one of the larger courts, had 1 court clerk, 1 assistant court clerk, 1 community worker, 1 forest guard, 1 agricultural demonstrator, 1 sanitary inspector, 9 court messengers, 2 caretakers, 4 garetta men, 1 market clerk, 1 market sweeper, 6 court assessors. These are paid by the Native Treasury. Court assessors help in the arbitration of cases. The key position at court is held by the court clerk, and usually he is not a Yao, but an Nguru, who, because he is literate, is the medium of all written communications to and from the chief. The court sergeant is the correct channel of approach to the chief, and the court messengers represent the chief to the villages.

The territory of a Native Authority is divided into 'administrative villages', under officially recognized and paid headmen. Within these areas there are clusters of huts, which do not form officially recognized administrative units, but which are none the less villages under their own hereditary headmen. The administrative village headman is responsible for the payment of taxes in his area, and for the observance of various regulations. He is usually a man with some standing in the Yao social system: one who has the right to conduct a boys' initiation ceremony, or to wear the head-band signifying rank. His authority is derived partly from his status as a senior kinsman, partly from his status as a village headman. If the administrative village under him includes a number of hamlets unrelated to the administrative village headman, he will delegate his responsibilities in these hamlets to their own headmen. Consequently, since village headmen perform administrative duties, whether they are officially recognized or not, there is competition among them for the official posts. In order to bring pressure to bear on the chief to make him concede marks of rank, they may threaten to move out of his area, and so to deplete his following. In spite of this bargaining tool, the position of the village headman *vis-à-vis* the chief is said to be getting progressively weaker. Cases once tried by them are now being taken to the chief's court, and the latter is able to draw on the power of the Administration to establish his dominance over the headmen.

The chief in the modern system stands as the representative of the people to the white Administration, and as the representative of the white Administration to the people. One reason for the lack of direct contact between the Administration and the people is the fact that Yao is not the official language of the district, and therefore Yao interpreters are necessary.

There are some occasions when the chief and his officials perform the functions proper to their office under the old social system. The white Administration is not concerned with their ritual functions, nor with initiation rites, nor does it take cognizance of witchcraft offences. Accusations of witchcraft are judged by the same personnel as accusations of theft or adultery, but they are not dealt with in the court house, nor recorded in the book.

1: Tew E-4 (no date) 1950 FT7 Yao FT7

Land Tenure

The rules governing land tenure were those which would be expected of a society which suffered from no land shortage. A man was entitled to as much land as he could cultivate, the limitation being that he should consult the headman as to his neighbours' boundaries. Abandoned gardens could only be taken up with the permission of the original cultivator.[1]

MAIN CULTURAL FEATURES

Religion

The Yao are largely Islamised. Codrington remarked that the perpetuation of this faith was distinctly antagonistic to British influence, and it received considerable attention from chiefs and headmen. Schools for the instruction of youth in reading and writing Swahili in Arabic characters were established in nearly every village, where also prayers were made at regular intervals in the day. The Moslem fasts and feasts were also observed, and the Yao were not inclined to embrace Christianity.[2] Their conversion to Islam did not take place till the nineteenth century, long after their first introduction to the Arab traders at Kilwa and Zanzibar, although they had adopted Swahili modes of dress much earlier.[3]

According to Hetherwick, Islam is strongest on the lake shore and on the east border of Nyasaland, chiefly round the old slave-trade centres. Makanjira's on the south-east side of the lake, and Domira Bay on the west, were the centres of Moslem propaganda. The Moslem population around Zomba and Blantyre consists mainly of Yao men, who have built themselves mosques in their own villages, or use the large mosques of Indian Moslem merchants. In the west districts, lower Shire, Ruo, central Shire, Lilongwe, Fort Manning, the Moslem population does not total more than 732. In the districts round Fort Johnston and Kotakota, the Moslems are one-ninth of the total population, while in Zomba district they number one-fifth.[4]

The Yao pagan religion was a form of ancestor worship. Apart from diviners and medicine men, there was no regular priestly profession. Intercession with the ancestors was performed by the chief, on behalf of the chiefdom, by the headman on behalf of the village, and by the head of the matrilineal kin for his dependents.[5] A man was qualified to approach his ancestors individually *only if he had been initiated and had a house of his own.*[6]

Some of the ritual duties of the chief have already been mentioned. When his people were visited by drought or epidemic, or when he fixed the day for the beginning of the millet harvest, he made an offering of flour and of beer poured into a pot in the ground at the grave of a dead chief. The village headman made similar offerings to the spirit of his dead predecessor. The spirits of the dead Nyanja chiefs, conned by the Yao invasion, were regarded as still powerful in the homeland of their people. For instance, Kangombe, whose shrine was on Mount Soche, used to be appealed to for rain, and on the principle that the most appropriate mediator between a dead man and the living is a descendant of the former, the Yao chief, Kapeni, when he wished to propitiate

[1] Macdonald, 1882, vol. i, pp. 177-9; Sanderson, n. 1903, p. 180.
[2] Codrington, 1898, p. 316; see also Maples, p. 1899.
[3] Young, T. C., n. 1931, p. 30.
[4] Warren, 1906, p. 270; Sanderson, n. 1902, p. 302.
[5] Hetherwick, n. 1902, p. 100.
[6] Macdonald, 1882, vol. i, p. 89.

2: Mitchell E-5 (1946-1949) 1956 FT7 Yao FT7

The chief identifies a man who comes to see him in exactly the same way, and the Administration has adopted a similar system, except that it has its own definition of the village. During the initiation ceremonies, the initiands[1] are housed in long grass sheds which are subdivided into sections. Each section or room of the long shed houses the boys or girls from one village. If villages share a burial ground, they have allotted portions where they bury their dead separately. In these and many other ways the village is looked upon by the Yao as a distinct unit in the chiefdom.

The chiefdom in the old days was distinctly a territorial unit and all the villages within that area recognized the superiority of the chief. The boundaries of the old chiefdoms were marked by rivers and hills and fixed after conquest and agreement. They are still well remembered. Modern chiefdoms are defined in their limits partly by Government decree and partly by custom. When Principal Headmen were appointed, the districts under them were demarcated with 'due regard being given to the composition of the Native population'. The traditional areas under the various chiefs, therefore, were recognized by the Administration as districts, so that the districts or their sections almost coincided with the chiefdoms. Some disputes between chiefs over boundaries have occurred from time to time and the Administration has had to arbitrate. For example, the Provincial Commissioner of the Southern Province reported a difference between Liwonde and Kawinga in 1936,[2] but through time these differences have been eliminated.

Traditional and Administrative boundaries do not coincide in a few places, for two reasons. Firstly, the Administration has accepted an obvious and physical boundary in preference to an indistinct and social boundary. It has taken the Domasi River as the boundary between Ntumanje and Mpona, though in fact a few villages under Mbela, Kawinga III's son, live on the south side of the river, and fall for Administrative purposes in Ntumanje's area. Mbela is still very strongly associated with Kawinga in ritual and kinship matters. His dealings with the

[1] I am grateful to Prof. Schapera for suggesting this word for those who are undergoing initiation ceremonies. The parallel is with graduands, i.e. those who are undergoing graduation ceremonies.

[2] *Report of the Provincial Commissioner, Southern Province* (1936), 20.

2: Mitchell E-5 (1946-1949) 1956 FT7 Yao FT7

631
643

Administration, however, must be through the chief Ntumanje.

Secondly, some discrepancy has arisen because the Administration has not recognized all the indigenous chiefs. This has occurred mainly in Jalasi's area where there are at least two headmen who as far as I can judge were chiefs in their own right before the British conquest. These are Mkumba and Namwera.

Mkumba was the father of Nkata, the original Invader of this area whose chieftaincy later took the name of Jalasi. Mkumba moved into the southern part of Nkata's chiefdom where he settled. Nkata occupied the north. As far as I can gather, Mkumba held rights to the ivory in his area and made sacrifices for rain—the main attributes of chieftainship. He still holds both types of initiation ceremonies and tries cases not involving large compensation. Nowadays, the office still commands some respect, though the present incumbent himself is not highly respected. The village under him has broken up since his accession.

Namwera came into the area before the White invasion with a small following from Mataka's area in Portuguese East Africa. He obtained chieftaincy rights over a large tract of land. Though I have not been able to check this in Government records, informants tell me that he was originally a Principal Headman, but that he was deposed largely because of the intrigues of *Jalasi III with a Government* clerk. Nowadays, Namwera claims to be independent of Jalasi and is markedly hostile towards him. The village headmen who came into the area still recognize Namwera's authority and take their cases surreptitiously to him, if they do not involve compensation. But as far as the Government is concerned he is merely one of Jalasi's headmen, and if it comes to a trial of strength, Namwera will have to recognize the authority of Jalasi.

In general, however, the Administrative system, in incorporating the main indigenous chieftains, incorporated the indigenous organization in its framework. Kawinga as a Native Authority is the superior of Chiwalo, his 'sister's son'; of Chamba, his 'son'; of Mpona, his 'brother's son'; and of Ngokwe and Chikwere who came to seek his protection. Kawinga holds his position both by virtue of his indigenous rank as a descendant of the original Invader Kawinga, and also as a Government representative. Liwonde, also a Native Authority, resists Kawinga's

2: Mitchell E-5 (1946-1949) 1956 FT7 Yao FT7

claims to primacy, and by the ideology of the kinship system is equivalent in status. In Jalasi's area, once again, the indigenous status of the chieftaincy is shown by the Administrative recognition of Jalasi against Mkumba, who was a minor chief, and Namwera, who had come to 'ask land from Jalasi', and who had to give some slaves and some ivory for his chieftaincy rights in the area.

The relationships of Native Authorities to each other to-day are thus fixed partly by the Administrative structure, and partly by their historical backgrounds, and I have indicated that the structure the Administration imposed in the Yao areas was very largely determined by the indigenous structure which existed at that time.[1] The Administrative system to-day, therefore, supports the traditional structure.

The five chiefdoms with which this study is concerned stretch from Zomba in the south, almost to Fort Johnston to the north-east of the Shire River. These chiefdoms are Malemia in the north of Zomba district, whose area lies along the Malosa range of mountains north of Zomba as far as Mount Chaoni. Liwonde district stretches from Mount Chikala and Mount Chaoni in the south to Mount Muli in the north. This district contains the chiefdoms of Liwonde and Kawinga and the minor chieftains under them. In Fort Johnston district which stretches from the north of Mount Muli to Lake Nyasa are the chiefdoms of Jalasi, Nyambi, Katuli, Makanjila and an Nyanja chief Nankhumba. The chiefdoms of Jalasi and Nyambi abut those of Kawinga and Liwonde, and it is with these that we are mainly concerned.

Malemia, whose clan-name is *amwale*, was apparently the first of the Machinga chiefs to move into present-day Nyasaland from present-day Mozambique.[2] His group moved south-west past the north end of Lake Chiuta and settled for a while on Mount Muli. Malemia was closely followed by Nkata, from whom the Jalasi chieftaincy developed and whose clan-name was *andewe*, and his 'father' Mkumba, who moved in westwards past the north end of Lake Chiuta into the Mangoche Highlands. Here, together with the help of Kawinga and Liwonde, they attacked the so-called Mangoche chiefs (Mlumbe, Chikowi, Kapeni,

[1] Chap. II.

[2] The history of this chieftaincy is set out more completely in 'An Outline of the Social Structure of Malemia Area'.

2: Mitchell E-5 (1946-1949) 1956 FT7 Yao FT7

631 643 175 Matipwiri, etc.), displaced them southwards and so established chiefdoms of their own. Mkumba moved to the south and Nkata set up a fortress on Mount Mangoche, from which vantage-point he resisted British conquest for many years. Kawinga and Liwonde, whose clan-name was also *ambewe*, had moved in with Nkata but continued across the Shire River to settle in the Kongwe Hills to the west of Lake Malombe. Later, Kawinga and Liwonde re-crossed the Shire and moved south-eastwards until they reached Mount Chikala. This in the meantime had been occupied by Malemia. Kawinga and Liwonde succeeded in dislodging Malemia who retired to the Malosa Range, where he is situated to-day. Liwonde then left the mountain to settle on the east shore of the Shire River.

631 643 The arrangement of these particular chiefdoms in Administrative districts therefore reflects the social relationships among the chiefs. Between Malemia and the two *ambewe* chiefs, Kawinga and Liwonde, there is an uninhabited forest reserve and a mountain range. Liwonde and Kawinga who can trace their descent [611] matrilineally from a common ancestress and who are to-day perpetual[1] brothers, together with their minor chiefs, share the Liwonde district. In spite of the opposition of these two chiefs which arises from their position as chiefs of independent chiefdoms, they sometimes meet and visit each other. Chiwalo, who from the Administrative point of view is under Kawinga, *is in* fact more closely related to Liwonde and has much more to do with him. But Chiwalo's headmen usually appeal to Kawinga, not Liwonde, in their difficulties. Within Kawinga's area at a funeral or an installation ceremony of an important headman in the northern areas, representatives of the nearby chieftaincies Ngokwe, Chikweo, Chiwalo and Kawinga will be present. In the south, the representatives of only Chamba, Mposa and Kawinga are likely to be present. Headmen, if they come from Liwonde's area, do so because of kinship connection and not because they are representatives of Liwonde.

The relationships of Jalasi and to some extent Nyambi, with Kawinga and Liwonde, are much more distant. Kawinga and Liwonde stand opposed to Jalasi in spite of the fact that Jalasi shares their clan-name. I have never known of Jalasi coming to visit Kawinga or Liwonde. Jalasi's area extends well down

[1] i.e. the offices are fixed perpetually in this relationship. See p. 122.

2: Mitchell E-5 (1946-1949) 1956 FT7 Yao FT7

the Shire River to within about 15 miles from Liwonde's headquarters, and though he frequently tours his chiefdom in this area I have never known him to cross his boundary. The position of Nyambi here is interesting in that originally Nyambi's chiefdom was part of the Liwonde district. It was made part of this district in the early days of the Administration when Nyambi II, Nkata's sister's son who founded the chiefdom, opposed the reigning Jalasi and moved into the area where the chiefdom is now situated. The implication of Nyambi's being in Liwonde district was that he had to sit on District Councils in Zomba with Kawinga and Liwonde instead of with Jalasi in Fort Johnston. I understand that since the original Nyambi died his several successors have made requests to the Administration to be included in the Fort Johnston district. Finally in 1948 the request was granted and Nyambi's chiefdom was once more linked with his perpetual son's in Fort Johnston district.

The opposition of the chiefdoms as wholes appears in other situations as well, often when it is not expected. For example, there are two tobacco markets in the area studied. One is in Nyambi's area and the other is about 25 miles away at Mlomba's village in the extreme south of Kawinga's area. Mlomba is a uterine brother of the present Kawinga. Chiwalo's chiefdom abuts Nyambi's and tobacco growers need to transport their produce only six or seven miles to the market in Nyambi's area. Yet several growers told me that they were taking their produce the 25 miles to Mlomba market because they felt in some vague way that the Chiwalo people got lower prices for their tobacco in the Nyambi market than the Nyambi people.

The cleavage between the chiefdoms is also expressed in their religion. Kawinga, Liwonde, Jalasi and Nyambi are all Moslems and very few of their followers are Christian. Malemia is a Christian and very few of his followers are Moslems. But between Kawinga and Liwonde on one hand, and Jalasi and Nyambi on the other hand, there is a cleavage in terms of a schism among the Moslems. One group, the *twaliki*, became centred at Jalasi's court village Majani. The *twaliki* believe that Islamic devotions should be accompanied by loud singing and chanting of Arabic tracts and by particularly vigorous dancing. Even at funerals this type of prayer is required. The other sect, the *ndwa*, centred at Kawinga's and Liwonde's court villages,

631 advocates the more orthodox type of Islamic devotion in which
643 a quiet restrained manner is emphasized. As far as I know the
745 *swalihi* sect are confined entirely to Jalasi's chiefdom and the *sukutu* to Kawinga and Liwonde. In this matter, Nyambi's people side with Kawinga's and Liwonde's.

631 On the other hand, local informal organization is well de-
643 veloped so that Chiwalo who is at the point of juxtaposition of
692 Kawinga, Liwonde, Nyambi and Jalasi chiefdoms, may try cases involving headmen from any of these areas, and they usually accept his arbitration. His is the nearest court house. The actual boundaries of the four areas, however, are very clearly recognized and Chiwalo realizes the limits of his jurisdiction. Though he may arbitrate in a difference between headmen, he would not dare to apportion land outside his area. Headmen living on the boundaries of two chiefdoms arbitrate in each other's cases; the villagers under them intermarry. A village in Chiwalo's may
621 procure garden lands in Jalasi's area, and children may be initiated
631 at ceremonies held by headmen in other chiefdoms. There is no
643 clear break in the normal social relationships of people across the boundaries of chiefdoms, and their members interact as freely with each other as members of two villages of the same chiefdom. The cleavage between the villages on different sides of the *boundary of a chiefdom* becomes apparent only in special situations.

631 The formal relationships of the chiefs, set by the history of
643 their conquests and their kinship, and incorporated in and slightly modified by the Administrative framework, are overlaid by an informal local organization where the interaction of village headmen only conforms to the formal pattern when no agreement can be reached.

The Position of the Modern Chief

643 In ritual situations a chiefdom is clearly differentiated from its
769 neighbours, and many of these situations arise in the cult of
793 ancestor spirits. The ancestor cult has fallen away almost completely among village headmen, but among the chiefs it is still strong, and appears particularly in the rain-prayers and the initiation ceremonies. Later, I shall discuss at length the importance of the chief's sanction before headmen may conduct initiation ceremonies. This is because the spirits

2: Mitchell E-5 (1946-1949) 1956 FT7 Yao FT7

dads may hold garden plots in other village areas which they have temporarily borrowed in a private arrangement with the individual owner. But when the system is seen in relation to the pattern of occupation of the area, it is greatly simplified. Each garden may be traced back to the original owner through three or four village headmen. The pattern of the reversion of rights follows the same system. The garden land of a village which has recently moved in and is moving out again reverts directly to the village headman who granted it. If he has moved out it reverts back to the village headman from whom it was in turn acquired.[1] These original landholders form the central points of locally organized areas to-day. For example, in Chiwalo's area there is Chiwalo at the top of the scale, then there are Kapalowa, Ciswaja, Mumbwa, Makata and Nyanje as the most important village headmen, and they take precedence over any of the other village headmen. All the others who have come into the area since then, of whom many are Nguru, rank very much lower.

From the smallest village to the chiefdom as a whole, therefore, there is a series of overlapping areas of organization. In any particular area chosen at random in a chiefdom as large as, say, Kawinga's, there will probably be two or three small villages which recognize the primacy of one of their number. The headman of this village may be called in to arbitrate in disputes over land or personal quarrels or even in the private consultations held after the death of a village member (*mapoto*). But the superior headman in turn recognizes his superior who was in the area before him. This system is extended over larger and larger areas, each headman in turn recognizing some other headman who was in the area before him, until ultimately the primacy of the invader chief over all his headmen is established by the same principle. There is no clear-cut district organization as among the Zulu and Bemba.[2]

[1] See also "Preliminary Notes on Land Tenure and Agriculture among the Machinga Yao", *Human Problems*, 2 (1957), 1–13. This system of land-holding has been called "estate of holding" by Gluckman. See his *Essays on Lozi Land and Royal Property*, Rhodes-Livingstone Paper, No. 10 (Livingstone, 1943), p. 29 ff.

[2] See the essays by Gluckman and Richards in Fortes, M., and Evans-Pritchard, E. E., *African Political Systems*, Oxford University Press for the International African Institute (London, 1940).

2: Mitchell E-5 (1946-1949) 1956 FT7 Yao FT7

strangers. Meantime, the seceding group moves into some other village area at a distant place, where they are strangers themselves. The result is that kinship soon ceases to be the organizing principle in local areas, and the principle of primacy takes its place. Hence, primary[1] kinship provides the principle on which the relationships among village headmen, and therefore villages, may be organized in a local area, for only a relatively short time. Before long, for a variety of reasons, the smaller villages move away and their sites are taken by others.

Primary matrilineal kinship on the other hand retains its significance as the means whereby relationships are organized within villages. In other words, outside the lineages of the ruling families it is very difficult to record a genealogy which does more than link the component parts of a village. Beyond this genealogies are socially insignificant. Therefore, since villages are continually breaking up, genealogies are usually shallow. Once a group has broken away to found a new village, its exact genealogical link with the parent village tends to be forgotten and replaced by a formalized link of perpetual kinship between the two village headmen.

Yao society, therefore, is not 'organic' in the way that Fortes describes Tallensi society: it is not 'governed by the same principles at all levels and in every sector of the social structure'.[2] Instead different principles of organization apply at different levels of Yao society. Thus the shallow lineages that form the cores of villages are internally segmented. Villages are composed of matrilineages linked to each other usually through patrilateral ties, ties which are initially primary but become perpetual. Chiefdoms, on the other hand, may be seen as organizations of villages ranked in relation to each other and to the chief in terms of their perpetual kinship links, their antecedents, and their strength of following.

The same groups of matrilineal kinsmen may interact in three different fields of social relationships. Firstly, they may form a segment within a matrilineage. Secondly, they may form a group in a village linked initially by a primary and later by a perpetual patrilateral tie to the headman. Thirdly, if they

[1] i.e. kinship that can actually be traced as against 'putative,' or 'perpetual' kinship.

[2] Fortes, *The Web of Kinship*, 241.

2: Mitchell E-5 (1946-1949) 1956 FT7 Yao FT7

621 this happens the husbands take their wives to their several villages with them.

Throughout this general process the links between groups of any particular area are constantly changing but the general pattern remains constant. A village expands outwards, and the various patrilaterally-linked groups, and often some of the segments of the dominant lineage, form hamlets separate from each other. The dominance of one of the local headmen over the others is still recognized and the general pattern of primacy is maintained. Some of the earliest villages in the area remain intact through many years. Villages which were small hamlets twenty or thirty years ago, when they had just moved into the area, have become relatively senior. Many headmen who were senior then have moved, or their villages have disintegrated, or ceased to exist. Other villages have moved in and are ranked lower. Thus through time the rank of any one headman may have changed, but the ranking system and the relationships of senior to junior headmen remain unaltered.

621 The general process is the same for the whole chiefdom,
622 though there is less overall structural change than in smaller
631 areas. The more important a village headman, the less likely is his village to disappear entirely. The most important village headmen, therefore, have long histories of association with the chief. Thus while there is considerable change going on at the lowest levels of the social system, the social structure of the whole chiefdom is remarkably stable. In other words, the rate of change taking place within the structure varies directly with the level of organization within that structure. The names of the *ndunas* of Kawinga, Liwonde and Malemia are the same as those of the *ndunas* who accompanied these chiefs into Nyasaland in the middle of the nineteenth century. Relatively few of them have disappeared. And so it is with important village headmen. The links between them, fixed by their rank and status relative to each other in perpetual kinship and other ties, form the political structure of the chiefdom. From chiefdom to chiefdom the same pattern of organization is concealed behind an apparent diversity of actual links.

178 But, as a result of their contact with other peoples and their
622 absorption into the economic and administrative framework of
643 the British Empire, new social relationships are developing

Village headmen themselves are graded in importance and there are certain marks of rank which distinguish the more important headmen. We have already examined one of the most obvious ways in which the village headman's importance is judged, that is, by the number of people in his village. In addition there are other ways in which village headmen may be distinguished both from the common people and from less important headmen. Thus, for example, some of the more important village headmen have the right to conduct initiation ceremonies, this right being granted to them by the man who is in a way the most important village headman of all—the Chief. The right to hold a boys' initiation ceremony (*lipondo*) is of more importance than the right to hold a girls' initiation ceremony (*cipate*). Yet another mark of rank is the right to wear a plain crimson band around the forehead (*mlangali*), this right also being granted by the Chief. 622 554 881

The Administration has recognized the more important village headmen and has entrusted to them certain duties. By no means all the people called "village headmen" in this paper are recognized as such by the Administration, but I do not know of any person who has the right to wear a red band and is not also an Administrative village headman. 622 554

The status system has apparently been taken over from pre-European days, but it is uncertain to what extent these important village headmen had powers. Some to-day have all the marks of rank that the Chief has, i.e., they hold both boys' and girls' initiation ceremonies, are entitled to the special greeting accorded to important village headmen (*mbale*), wear a red band, have the right to be buried in the village *and not in the common cemeteries, and to have their bodies prepared for interment* by people of similar rank. It appears that such people exercised a certain amount of power, by reason of their personal qualities, over less powerful neighbours, and some were able in the past to demonstrate their autonomy by moving off to establish petty chiefdoms of their own.

Nowadays the Administrative village headmen have certain statutory duties to perform towards other minor groups actually independent but considered, for the purposes of the Administration, to belong to the village. The relative importance of the headman is still the deciding factor in such questions as determining who is to be called in to arbitrate in a case. Thus, though for Administrative purposes a small village may be considered to be a part of a larger Administrative village under an Administrative village headman, yet when a case for arbitration occurs within that smaller village, some other person than the Administrative village headman may be called in to arbitrate. 622 554 631 692

Laws promulgated by the Administration are conveyed through the Chief to the Administrative village headmen and in this way a hierarchy of power is being introduced. The small village headmen now see the Administrative village headmen as a representative of the Chief and the Administration. The Administrative village headmen in turn see the Chief in this light. But in matters directly affecting the Administration, the small village headmen also see the Administrative village headmen as his own representative *vis-à-vis* the Chief and the Administration. 622 631

In general the village is by far the most important corporate body in the social organization of the Yao, not only as a significant primary group but also as an element 621 622

[P.141 C]

(22) through one or other accumbent of the position
(41) of village headman.* Succession to posts of authority, including that of the chief, is matrilineal.
(22) Ideally the succession should pass to the first-born son of a man's eldest sister, but this is not always followed, for the personal qualities of the successor are most important.

(16) The total African population of the area studied is 65,000. There are one or two Indian traders and two Europeans permanently resident in the area. One European is a missionary in the north-east corner and the other an Agricultural officer in the south centre of the area. Part of
(3) the area is administered by the District Commissioner, Zomba, and part by District Commissioner, Fort Johnston, and these officers tour the districts under their jurisdiction. Occasionally other White officials and labour recruiters appear, but in the main, Whites are not often seen in this
(41) area. The one road traversing it is usually impassable for a part of the rainy season.

683 There is little doubt that village headmen did
622 was in power and finally break away to form the
578 nucleus of a chiefdom of their own. The chief that a headman had left could do little to regain his lost subjects and he had to rule not by tyranny but by tact. Duff MacDonald, for instance, records: "When a quarrel arises between the chief of the country and an important headman the latter may rebel and found a new kingdom, thus depriving the old chief perhaps of one-third of the villages in his dominion".[1] Nkanda is an example. "Nkanda of Chewanda was at first a headman of Kumpanza's but rebelled and lives on the Southern side of that mountain an easy day's march from Blantyre."[2]

683 The leader was known, and is still known to-day, by the term *mpamo cilendo*. This might be translated as "owner of the country" but the term "owner" in this context would be a mistranslation. I prefer to translate this phrase as: "The person with whom a certain area is identified".[3] Hence when a man says, as the Yao do: "I come from Kawinga's", he does not mean that the land is owned by Kawinga, but that *Kawinga* is the most important man in that area.

685 Among the village headmen in the area under a
631 particular leader there were a number of trusted
692 village headmen called *ndunu*, which term I
622 have translated as "councillors". These councillors had special duties to perform. They were in the nature of governors in outer areas and each had a number of other villages under his jurisdiction. By this I mean that these villages were supposed to take certain cases for trial to him and to approach the leader through him. The councillors were supposed to visit the village of the chief each morning and to report anything untoward. The councillors also had the important duty of advising the chief, particularly in connexion with raiding of neighbouring tribes. Councillors also intervened in the domestic affairs of the chief and in the all too frequent conflicts between the chief, his sisters' sons and his younger brothers.

643 and determine petty native cases was conferred
622 upon the headmen, though the District Commis-
175 sioner was supposed to seek their advice when
648 necessary.

Therefore, from the time of conquest a pattern of superordination of the Whites and subordination of the Africans was established and the indigenous political system remained largely without official recognition until the Native Authorities Ordinance was passed in 1933. The major change wrought by this Ordinance was that Native Courts were planned and instituted by the Native Courts Ordinance of the same year. At the same time a Native Treasury was founded.

IV. The Present Position

643 wings to Portuguese East Africa. They were
175 allowed to return later and they took up their
648 positions in an area roughly outlined in the early
131 part of this paper. At the same time, owing to military action by the Portuguese a certain number of refugees were crossing the border into the Lake Chiuta area of Nyasaland.

TABLE I

Demographic Composition of Political Areas[1]

Sub. Area	Tot. Pop.	Admin. Vills.	Av. Pop. of Admin. Vills.	Tribal Composition			
				Ch.	Ya.	Ma.	Ng.
N.A. Kawinga (Yao)	23,087	311	74	75	25	25	5
S.N.A. Cantipe (Yao)	5,119	61	84	72	30	7	1
S.N.A. Mpeta (Yao)	4,411	60	74	49	19	32	—
S.N.A. Chiwalo (Yao)	2,302	19	116	80	15	5	—
S.N.A. Ngokwe (Mpondas)	2,866	21	136	54	43	40	1
S.N.A. Chikwawa (Mpondas)	7,102	49	145	28	56	16	—
N.A. Liwonde (Yao)[2]	12,714	106	120	75	30	5	—
N.A. Nyambi (Yao)[2]	7,235	63[2]	116	73	27	—	—

162
643
631
[563]

[P.149c]

643

162

631

* Estimated from crude returns of 1951 census. Chanco Commissioner's Office or Sonda and Fan Islands.
* Census data for a newly created S.N.A. Town, not recorded separately.
* Approximate only. Number of Administrative villages not ascertained.
* S.A.=Town Authority ; S.N.A.=Subordinate Town Authority.

162
643
631

	Total Pop.	Area sq. m.	Density per sq. m.
Kwenge	[illegible]	482	[illegible]
Lisonde	[illegible]	276	[illegible]
Nyanja	[illegible]	145	[illegible]

The Table 1 summarizes the present demographic position in the area. The greater part of the area under study is divided between the Native Authorities Kwenge and Lisonde who call each other "brother". Kwenge as well as being a Native Authority with jurisdiction over five subordinate native authorities, is a chief over a certain number of villages in the same way as his subordinate native authorities are. These subordinate native authorities under Kwenge are:

631 1. *S.N.A. Gondo*, who is a matrilineal descendant of the first Kwenge's sister and who still calls the present Kwenge "father", is in charge of an area along the south side of Mount Chiuta;

2. *S.N.A. Mpuse* is a matrilineal descendant of the son of the first Lisonde and therefore calls both Kwenge and Lisonde "father" (*ataci*). His area lies near Lake Chilwa and contains a high proportion of the original Nyanja peoples of the area;

3. *S.N.A. Gondo's* area adjoins that of N. A. Nyamlo at the north of Kwenge's sub-district. Gondo was a sister's son to one of the previous Kwenge's and his mother's brother had succeeded, illegally in the opinion of some, to the name of Kwenge V (see p. 147). Gondo succeeded to his mother's brother's name that he had before he took the name of Kwenge V. The present Kwenge VI who was known as Mlungu before he succeeded must call Gondo "my elder brother" (*abalamunga*);

4. *S.N.A. Njolwe* and 5. *S.N.A. Chiuse* are, as the Table shows, not Yao but Mpondo who are a people from Portuguese East Africa. The Mpondo have lost whatever language they had in the past and now speak Yao and as far as I could see follow Yao usage and customs. The areas under the jurisdiction of these S.N.A's lie along the north-east boundary of Kwenge's area adjoining the Portuguese territory. The Table also shows

63 that there is a relatively low proportion of Tao in the area whereas the Ngoni are well represented. The term Ngoni is applied by the Tao to any person from a certain part of Portuguese East Africa. It is indiscriminately applied to a number of tribes, though mostly to the Lomwe who form a congeries of related tribes.

Liwonde sub-district lies to the west of that of Kwinga and it has as its western boundary the Shire River. There is one S.N.A. in the area, Sowa, appointed in 1966, but I could not visit him and there is no recent information on this group. This new S.N.A. is a sister's son to the present Liwonde and actually stands in the direct line of succession to the name of Liwonde.

Nyambi sub-district is now a part of Fort Johnston District. It lies to the north of Kwinga's area and is small. The relationship of Nyambi to Liwonde and Kwinga has been noted above (p. 147). At the same time it was noted that Nyambi calls Jalasi "my child" (mwanangu). Jalasi, who had been a powerful leader, was recognized by the Administration as a superior chief in the area. The Nyambi who was living at the time resented the activities of a person who was genealogically inferior to him and therefore moved from the area he occupied then, to the present position which was under Kwinga at the time (about 1916). When the Native Authorities Ordinance was introduced Nyambi was made an N.A. independently of Kwinga. Recently (1967) this sub-district under his jurisdiction was transferred from Zomba District Administration to Fort Johnston, largely at the request of the present Nyambi who said that he preferred to be with his own relatives (Jalasi's family).

53 The Table I shows that in some areas there is a considerable proportion of non-Tao under Tao chiefs. The reason for this is that the Tao came into these areas as conquerors, either eliminating the indigenous Nyanja or allowing them to remain there in a subordinate position. Later, from the turn of the century until about 1930, there was a gradual infiltration of Ngoni people into Nyasaland from Portuguese East Africa. The presence of the different tribal

2: Mitchell E-5 (1946-1949) 1956 FT7 Yao FT7

village headman and had to administer his slaves and relatives in his village in the same way as a village headman.[1] MacDonald shrewdly observes: 175 578 622 643

> Where the chief sees occasion to interfere with his subordinates he generally consults his own interest. He will say to a headman, 'I see that you have been behaving badly to that subject of yours. You cannot get on with him: he must leave you and come and dwell in my own village.' The chief thus secures another servant.[2]

Another writer observed, 'As a chief's power consists of the number of his subjects the loss of a man is a serious matter.'[3] 175 622 643

A village headman also tried to strengthen his position against the chief and against other village headmen by attracting to himself as many followers and dependants as he could. The process whereby a man might increase his status is described as follows: 556 567

> However large the settlement may become, the man that is first in the field is the chief or headman. In course of time he adorns his position by acquiring wealth. He may shoot some buck and get possession of their skins. With these he goes to the Mangoni country and buys slaves. An old person he obtains for a single skin, but a young slave costs two, and women cost much more than men. The female slaves thus bought are his junior wives and he keeps them busy in hoeing the farm, and all such female duties. The male slaves he employs in farming, building, making baskets, sewing garments and such masculine pursuits. He keeps all these persons strictly at their duties, and at the same time welcomes an opportunity of selling them at a profit. If his daughters were unmarried, he would give them slave-husbands. The natives aim at 'replenishing the earth and subduing it'. As it is no expense for them to rear families, they are all desirous to have many children.

Besides this increase of the village from the chief's own resources, there may be an accession of freemen. After the settlement is begun, a man may come to its founder and say, 'I wish to live with you.' The village chief gives him permission and calls him 'younger brother'. The newcomer brings his family, builds a house, and cultivates a farm in the same way as his chief. A freeman may leave his present chief and take up his abode with another, whose subject he becomes. His former chief has no longer any authority over him 175 622 641 643

[1] MacDonald, *Africana*, i. 134. [2] MacDonald, *Africana*, i. 133-6.
[3] Hynde, R. E., 'Among the Machinga People', *The Scottish Geographical Magazine*, viii (1892), 456-63.

2: Mitchell E-5 (1946-1949) 1956 FT7 Yao FT7

175 622 641 643 whatsoever. But a man often decamps by night taking with him many slaves belonging to his fellow-citizens; he then goes to some influential chief who may be only too glad to give the fugitive ground and to establish him as a sub-chief. Freemen who thus leave are detained by their former chief, who welcomes every opportunity of shooting or capturing them.[1]

175 559 622 643 648 In this way village headmen, by increasing their following, increased their power against the chief. MacDonald records:

When a person has acquired several villages, he becomes a higher headman, intermediate between the chief and the owner of a single village. Each headman lives in the village he likes best, and leaves his 'brothers' to manage his other villages. But a headman of great ambition often places his 'brothers' all around him, decides their cases, and practically governs a small kingdom of his own. If he lives far from his chief, one might suppose that he was quite independent. When a quarrel arises between the chief of the country and an important headman, the latter may rebel, and found a new kingdom, thus depriving the old chief perhaps of one-third of the villages in his dominions.[2]

MacDonald cites the case of Mkanda of Chirudzulu, who was at first a headman of Kachipamu's but rebelled, and went to live on the southern side of the mountain.[3] He also observes that on the other hand, 'a headman may keep up his chief's authority in a district that the latter could not otherwise hold'.[4] Elsewhere he says:

In and around his own village the chief of the country is a terrible power, and his government is supported by the most prompt and severe punishments. But in distant parts of his dominions, where influential headmen live, he may be little known, although as a matter of theory he is supposed to settle all grave disputes even in remote villages.[5]

175 643 The history of the Yao chieftaincies in MacDonald's time, and as told to me by my informants, is that of constant division into independent chieftaincies. In the Zulu and Bemba polities a strong state structure included a pattern of civil war and the main-

[1] MacDonald, *Africana*, i. 141-4.
[2] MacDonald, *Africana*, i. 31.
[3] MacDonald, *Africana*, i. 135.
[4] MacDonald, *Africana*, i. 136-7.
[5] MacDonald, *Africana*, i. 134-5.

2: Mitchell E-5 (1946-1949) 1956 FT7 Yao FT7

175 claimants to the succession, Kumbombo and Chiwale. Their
633 claims were really very equal and His Majesty's Commissioner
(April 1906) called in Kumbombo and the most important
645 headmen and decided the succession by their vote.' District
648 Books have many entries dating before 1911 showing that the Administration did not consider chiefs and village headmen insignificant.

The appointment of village headmen needed the approval of the Provincial Commissioner, but personally the recommendation came from the District Resident. It is reasonable to suppose that the District Resident in turn had discussed appointments with the principal headmen. Whatever the mechanics of the appointment, however, the outcome was that most village headmen who held positions of prestige in the indigenous system of ranking became village headmen under the Ordinance.

The District Administration (Natives) Ordinance thus made official the unofficial relationship which had previously existed between the Administration and the chiefs and the village headmen. The traditional relationship of chief to village headman and village headman to villager, however, became suffused with a new significance. These relationships had become part and parcel of the extensive administrative organization of the British Empire.

The Modern Administrative Structure[9]

648 The Native Authority Ordinance of 1933 and the Native
Court's Ordinance provide the legislative framework for the
• 652 modern administrative system. Under Section 23(e) of the
645 Native Authority Ordinance, the rules, orders, proclamations, notices and appointments made under the District Administration (Natives) Ordinance were not repealed. The duties which had so long been incumbent upon chiefs and village headmen, therefore, continued unaffected.

The chief, however, was set up at the centre of a hierarchy and given autonomy in a number of directions. The Native Court's Ordinance gave him legal powers to inflict punishment on his subjects; the treasury under his authority could raise

[9] I have dealt in some detail with the position of the chief in the modern situation in my article "Political Organization of the Yao of Southern Nyasaland".

2: Mitchell E-5 (1946-1949) 1956 FT7 Yao FT7

funds and could spend them. The chief could make rules and regulations in specific matters. 691

Burnt-brick court houses, burnt-brick offices and clinics have appeared at the traditional headquarters of the chiefs. A court clerk collects court fees and fines, issues receipts and records the cases in a register. A tax clerk issues licences and collects taxes, receives correspondence addressed to the chief and writes the chief's replies. In addition, there are other functionaries—community workers, forest guards, agricultural demonstrators, sanitary inspectors, market clerks, well inspectors and so on. 692 693

In other words, the position of the chief is becoming more and more that of an administrative head-of-department.[1] His position *vis-à-vis* his subjects is coloured by this. The chief is at once the people's representative to the Administration and the Administration's representative to them.

[1] Compare Barnes's statement about the Ngoni: "the great warrior chief has become in effect the only member of the Administration who never goes home to Britain on leave". Barnes, J. A., *Politics in a Changing Society*, 170.

563 group presents a problem to be considered but for the main purposes of this paper a brief comment is sufficient.

The Nyanja people who were allowed to remain in the area, continued to live in their village communities in much the same way as the Yao did. In fact the Nyanja and the Ngoni are so similar in culture to the Yao, that it was possible for them to fit into the Yao social structure fairly easily. For example, in Mpeme's area Mbande and Mbeta are recognized by the local Yao sub-chief as important groupages since they were the indigenous chiefs in the area before the Yao came as as invaders. Both, for example, have adopted
[574] the Yao practice of wearing a red band round the head to indicate rank. Both have the right to conduct the Yao indigenous initiation ceremonies. At one meeting I attended Mbande was allowed
[575] to sit in a chair while the only other person to do so was Mpeme himself. This is a mark of honour since no commoner is allowed to sit in a chair in the presence of the chief.

In the same way the Ngoni immigrants have come in small groups of matrilineal kin and have settled either in hamlets alone or set up small hamlets in close vicinity to kinsmen. Their headmen in turn have been absorbed into the general political structure though they have their own language and distinguishing cultural traits. Thus some Ngoni initiate their boys according to their own customs, though others will allow their boys

[TEXT CONTINUES TOP OF P.151B]

V. THE POLITICAL STRUCTURE.

WA 177 The accompanying diagram is designed to summarize the main types of interaction that take place in the political structure of the three areas. Interaction between the social personnel in the political structure can be said to take place in reference to certain sets of values. One set of values is that which the Yao recognize and believe to belong to the White people. Another set of values they recognize and subscribe to as their own. A chief may interact with a village headman because he has taken a regulation which

[TEXT CONTINUES BOTTOM OF P.151B]

563 to be initiated according to the Yao custom (Ingonde). In general, the Ngoni headmen are village headmen in the same way as the Yao are and they follow the same pattern in political behaviour.

563 At the moment, throughout the area, the various tribal groups live in kinship clusters so 62 that under one Yao administrative headman there may be two or three unrelated Yao kin-groups and possibly one or two Ngoni groups living quite separately. Though the population in the area as a whole is mixed, usually the village groups are tribally homogeneous. So far little inter-marriage has taken place. I shall not here analyze this situation, though it is politically pregnant. In many ways the Ngoni immigrants [71] are more progressive than the Yao. Most Yao in this area are professed Moslems and do not attend the local schools which are Christian. However, the missions have been more successful among the Ngoni and they are becoming more educated and advanced. A good proportion of the Government posts in the area is filled by Ngoni for this reason. This is more significant in the context of the general situation as will become apparent in the description below. For the rest of the paper I shall consider the political structure as I see it, in terms of the social personalities in the structure, and the presence of these non-Yao groups is implicit in the rest of this analysis.

V. The Political Structure

648 642 177 the Administration has persuaded the chief to pass and the full significance of which lies in a system of European values. These systems of values are foreign to each other in many features. Opposition between the two groups, White and Black, must arise if their behaviour is affected by different sets of values. The Yao, for example, believe that most deaths are caused by sorcery and claim the right to take punitive measures against the sorcerers. The Whites do not believe in this and prevent punitive action against people

R:Mitchell R-5 (1946-1947) 1949 F37 Tao F37
[P152]

DIAGRAM

SUMMARY OF POLITICAL INFORMATION ON TAO AREA

648
642
177

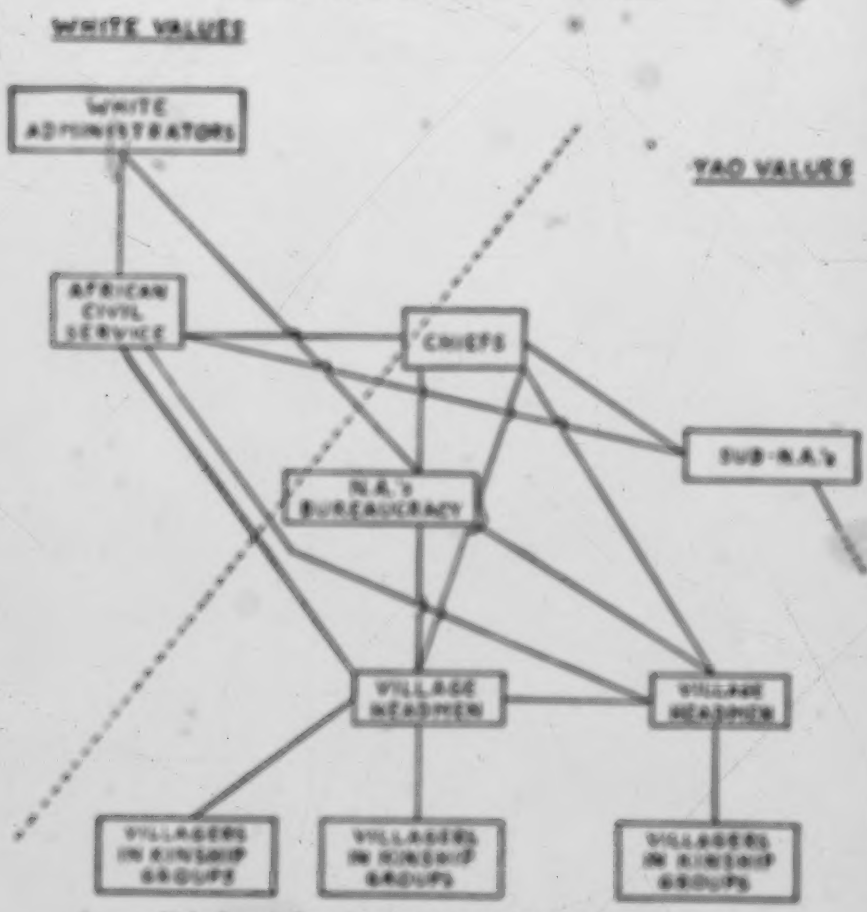

(Only the main lines of interaction are included in this diagram.)

who are, in them, innocent. The diagram has been divided obliquely to represent these two systems or fields of values. The division of the diagram into two parts depicts a major rift in local political relationships. While some political relationships, as say between village headmen, do not directly manifest this cleavage, in most, as say the chief with his subjects, though the Whites are not present in person, they are there in the context of the interaction. This will become evident as the analysis proceeds, but at this point it is sufficient to observe that the Whites and the White system of values are an integral part of the modern Yao political organization.

In addition to this, there is a hierarchy of status roughly conforming to the placing of the social personalities in the diagram, i.e., the White Administrators are of higher status than the African Civil Service which is roughly on the same level as the chiefs, but both are on a higher status than the Native Authority's clerk and officials are. The lines represent the main direction of interaction.

1. *The White Administrator and the African Civil Service*

By the White Administrator I mean the District Commissioners, Agricultural Officers and other Government officials who come into contact with the African populations, particularly in the rural areas. The social distance between a White person in general and the Africans is much larger than that between, say, an African chief and his commoner subject. Social interaction on an intimate basis cannot take place between chief and Administrator mainly because their relationship is dominated by the pattern of all South African interaction, where White does not interact intimately with Black. I have already stated that not many Europeans come into the area. Those Whites that do come into the area are immediately accorded the status of an Administrative Officer and are apt to be thought of as such, though they may not be so. The Yao clearly recognize that the Labour Recruiter is a different sort of person from the Missionary and both differ from District Commissioners, but

(68) with the kin group are usually settled by the arbitration of a local village headman or the chief. What decides whether a case is tried by a village headman or a chief seems to depend largely on the seriousness of the case and hence the amount of compensation that is involved. A quarrel between a village headman and his heir for example was settled by a local village headman, the compensation in this case being a matter of 2/- and a pot of beer. More serious cases are taken to the chief for arbitration and whether the cases are then tried in the court or not depends on the type of case. Certain cases are known to conflict with the system of values of the Whites. They are tried by the same court assessors and adjudged in by the same chief who presides in the courts of the Native Courts Ordinance, but they are handled by an entirely different procedure. Thus, a case involving the accusation of sorcery or the breach of a taboo leading to death and compensation claims is adjudged on by the chief acting in terms of the indigenous value system. These cases take place outside the court-house, usually at the chief's hut, and are not recorded as a court case at all. The chief awards compensation in the same way but it is not recorded as in ordinary court cases.

Cases which are known not to conflict with White values are tried in the courthouse if compensation of some value is involved. If we exclude from consideration the cases following a breach of the N.A.'s regulations we find that the recorded court cases are almost entirely about compensation for adultery, petty theft and assaults. Here the chief and court assessors function as social personalities acting in reference to a set

[NEXT CONTINUES TOP OF P.158B]

VI. GENERAL SUMMARY

(69) 177 I have tried to describe the political structure of the Tiv in Lowards, Kwaga and Nyambi sub-areas in terms of the interaction of social personalities in a structure briefly summarised in the diagram. The aspect of the social personality perceivable in set situations of social interaction

[NEXT CONTINUES BOTTOM OF P.158B]

of White values which coincide with their own. Informants say that the position of the village headmen in contrast with that of the chief is growing progressively weaker. They contend that cases now tried by the village headmen are now taken to the chief's court. Whether this is true or not is difficult to ascertain. The fact that there is some mention on the guilty party to settle the compensation if he is tried in the chief's court, probably pays a part. The compensation awarded is recorded in the Court Case book and the chief is empowered to keep a man under control until it is paid. The chief sometimes supports the village headmen against recalcitrant subjects. A man was refused to pay a compensation awarded against him by a village headman. The village headman referred the case to the chief who said to the man: "As you have disobeyed the order of the village headman I swear that you have insulted me, the District Commissioner and the Governor". But in general there is a tendency for the central authority to be strengthened and the chief emphasizes his relationships to the White Administration in order to consolidate his position of dominance over his headmen. At a succession ceremony of a village headman the chief who had supported an unpopular candidate said: "This man has been chosen by me and the Governor agrees with me". Clearly in this instance situation the chief saw himself against his subjects, and as part of the White Administration. He saw his power in this political situation to establish a dominance over the headmen, that he could never have established before the White men came (see p. 140).

VI. GENERAL SUMMARY

depends on the field of values in which the innovation is taking place. To illustrate this with a simple example, when the court messenger received a levy of 1d. from each garden owner in the area where the mentioned cloth had been stolen. From the non-chiefs, they saw in him a

642
177

representative of the chief, acting as he was in terms of a system of values indigenous to the Tsu. If during the same trip he informed the villagers that the village roads should be cleared, to the people he would appear as a representative of the chief who is representative of the Administrator and is acting according to a value held by the Whites and embodied in a regulation governing the cleaning of village roads. Two sets of values intermingle in daily life and social personalities are seen here in the gains and there in that depending on the particular interactional situation. Thus the chief, when he is addressing villagers and village headmen, sees himself opposed to them and shows himself to the people as a representative of the White system of values and emphasizes his bonds with the District Commissioner and the Governor. Talking to the Agricultural Officer he sees himself opposed to the White system of values and opposes contour ridging, saying that unlike the traditional system of agriculture it encourages white ants in the gardens.

642
186

At the same time the White value system, symbolized to the Africans mainly by the Administration, is becoming an integrating force in their life. The otherness of the White system of values emphasizes the unity of their own. Formerly hostile, chiefs are now living at peace under the

Administration. Africans are becoming increasingly aware of their position in the British Empire and in the world in general. The urge of labour migrants to South Africa and Southern Rhodesia have emphasized this since Yao from formerly hostile groups, Ngoni and Nyasja alike, were all classified as "Nyasa boys" and in the situation of being amongst vastly different tribes as these labour centres they have begun to see themselves as a united people. Also during the war there was a high recruitment rate in Nyasaland and since the 1st and 2nd K.A.R are recruited from Nyasaland, this heightened the feeling of belonging to a new political entity—Nyasaland. The new feeling of unity of Nyasaland people is felt most strongly by the younger people who have been out to work and who have been in the army. This feeling is also strong among the more educated who now read African newspapers from Southern Rhodesia and South Africa in which columns are set aside for "Nyasaland News". Symptomatic of this is the development of associations of a semi-political nature especially among the more educated people—the clerks and the teachers—organizations which cut right across the old tribal barriers, and which are serving to integrate the whole of the African population into a unified political body.

2: Mitchell E-5 (1946-1949) 1956 FT7 Tao FT7

HQ
291
701
751
G03

Frontispiece

PLATE I

CHIEF LAWRENCE THE SEVEN

He wears the traditional necklace of 'horn' charms which are medicated to protect him from the bullets of his enemies.

[facing p. iii]

2: Mitchell E-5 (1946-1949) 1956 FT7 Yao FT7

chief that he must deal. If we give a present to a village it is to the village chief that we must give it'; and, 'It is when a man transgresses against his own village chief that *personal responsibility* is brought home to him. When he transgresses against another village, his own chief pays for him.'[1] The village headman accepted liability for offences committed by his villagers against members of other villages, but could punish his own villagers by fines and by putting them into slave-sticks. Within the village, according to MacDonald,

> The headman cannot make his villagers hoe his farm for him, or do such private work. Neither does he exact tribute from them. . . . Still he expects them not only to stand by him in war, but to support his government on all occasions, and to render special assistance in the trial of judicial cases. . . . He may pronounce a capital sentence, or order as large a penalty as the fine of four slaves—especially if he be a higher headman. But his judgements may be complained of by any of his free subjects (only such appeals are rare, unless by parties that want to leave his village altogether). His decision may be revised by some other headman, as the ruler of the village from which his own settlement broke off; but the ultimate appeal is to the chief of the country. While the village headman settles all smaller disputes without troubling the chief, he usually reports graver cases.[2]

The Chief and the Village Headmen: the Political Process

The village headmen in any particular area recognized the superiority of one of their number, the chief of the land (*anyaw ilanda*). MacDonald classifies the headmen under one chief as follows:

i. Chief's blood relatives, usually called 'younger brother'.
ii. Settlers or refugees (*alanda*) who have come over with a large following from a hostile chief.
iii. Men who have gained the chief's favour by their services and been sent to occupy new spots in the kingdom.

'Other village headmen arise when a large village increases and sends forth smaller hamlets.'[3] All in the territory of a chief were integrated by a chain of authority. As he explains,

> i. Headmen are under higher headmen and under the chief.

[1] MacDonald, *Africana*, i. 186. Original italics.
[2] MacDonald, *Africana*, i. 153. [3] MacDonald, *Africana*, i. 156.

2: Mitchell E-5 (1946-1949) 1956 FT7 Yao FT7

175 2. Free men are under their elder brother in the few instances, but
565 they may carry their cases to the headman of their village or
622 even to the chief of the country.
643 3. Slaves were entirely under their own master.[1]

The headmen's subservience to the chief is described in the following passage:

In all public transactions the headman represents his village. He receives the chief's orders and sees them carried out. When he kills an elephant he sends one of the tusks to the chief. Should he kill [651] twenty elephants he is not expected to give up twenty tusks—two or three would be sufficient. If he shoots a large buck he gives one haunch of venison. For all such tributes he expects to receive in return a present (generally a little powder). . . . He is expected to [646 attend the chief's parliament unless he is under an elder brother in 593] which case he is not allowed to speak, except when especially commissioned. Headmen are expected to report all cases of war, but they often attack enemies without telling their chief beforehand, saying, [721] 'Let him hear of the enterprise when it succeeds.' Yet this is dangerous unless they are sure of success, and well acquainted with the chief's private sentiments. On reporting an attack they present the chief with part of the booty. In times of war each headman when summoned, must follow his chief's flag, otherwise his village is burned [627] down, and all that fail to escape are killed or enslaved.[2]

175 Yet within the framework of this organization villages were
578 markedly autonomous. MacDonald's description, which I have
622 just quoted, brings this out very well. Elsewhere he writes:
643 'The chief may often have less influence than powerful headmen, and we have known cases where he simply contented himself with grumbling when his headmen acted contrary to his desire.'[3] The chief did not differ greatly from his more powerful headmen. A certain amount of ritual in terms of ancestor worship embellished his position, and he had some ascendancy over village headmen to whom he had given land. Yet, in the last analysis, the chief had to rely on his personal following and military power to subjugate headmen who were becoming too powerful. The chief was therefore in direct competition with his subject village headmen, and involved in a constant struggle with them for followers. MacDonald describes how the chief himself was a

[1] MacDonald, *Africana*, i, 155.
[2] MacDonald, *Africana*, i, 157.
[3] MacDonald, *Africana*, i, 155.

2: Mitchell E-5 (1946-1949) 1956 FTT Tao FTT

village headman and had to administer his slaves and relatives in his village in the same way as a village headman.[1] MacDonald shrewdly observes:

175
578
622
643

> Where the chief was occasion to interfere with his subordinates he generally consults his own interest. He will say to a headman, 'I see that you have been behaving badly to that subject of yours. You cannot get on with him: he must leave you and come and dwell in my own village.' The chief thus secures another servant.[2]

Another writer observed, 'As a chief's power consists of the number of his subjects the loss of a man is a serious matter.'[3]

175
622
643
556
567

A village headman also tried to strengthen his position against the chief and against other village headmen by attracting to himself as many followers and dependants as he could. The process whereby a man might increase his status is described as follows:

> However large the settlement may become, the man that is first in the field is the chief or headman. In course of time he adorns his position by acquiring wealth. He may shoot some buck and get possession of their skins. With these he goes to the Mangoni country and buys slaves. An old person he obtains for a single skin, but a young slave costs two, and women cost much more than men. The female slaves thus bought are his junior wives and he keeps them busy in hoeing the farm, and all such female duties. The male slaves he employs in farming, building, making baskets, sewing garments and such masculine pursuits. He keeps all these persons strictly at their duties, and at the same time welcomes an opportunity of selling them at a profit. If his daughters were unmarried, he would give them slave-husbands. The natives aim at 'replenishing the earth and subduing it'. As it is no expense for them to rear families, they are all desirous to have many children.

Besides this increase of the village from the chief's own resources, there may be an accession of freemen. After the settlement is begun, a man may come to its founder and say, 'I wish to live with you.' The village chief gives him permission and calls him 'younger brother'. The newcomer brings his family, builds a house, and cultivates a farm in the same way as his chief. A freeman may leave his present chief and take up his abode with another, whose subject he becomes. His former chief has no longer any authority over him

175
622
641
643

[1] MacDonald, *Africana*, i, 154. [2] MacDonald, *Africana*, i, 155–6.
[3] Hynde, R. S., 'Among the Machinga People', *The Scottish Geographical Magazine*, viii (1891), 656–63.

2: Mitchell E-5 (1946-1949) 1956 F77 Yao F77

175 632 641 643 whatsoever. But a man often decamps by night taking with him many slaves belonging to his fellow-citizens; he then goes to some influential chief who may be only too glad to give the fugitive ground and to establish him as a sub-chief. Peasants who thus leave are detained by their former chief, who welcomes every opportunity of shooting or capturing them.[1]

175 554 632 643 648 In this way village headmen, by increasing their following, increased their power against the chief. MacDonald records:

> When a person has acquired several villages, he becomes a higher headman, intermediate between the chief and the owner of a single village. Each headman lives in the village he likes best, and leaves his 'brothers' to manage his other villages. But a headman of great ambition often places his 'brothers' all around him, decides their cases, and practically governs a small kingdom of his own. If he lives far from his chief, one might suppose that he was quite independent. When a quarrel arises between the chief of the country and an important headman, the latter may rebel, and found a new kingdom, thus depriving the old chief perhaps of one-third of the villages in his dominion.[2]

MacDonald cites the case of Mkanda of Chiwalanda, who was at first a headman of KuMpama's but rebelled, and went to live on the southern side of the mountain.[3] He also observes that on the other hand, 'a headman may keep up his chief's authority in a district that the latter could not otherwise hold'.[4] Elsewhere he says:

> In and around his own village the chief of the country is a terrible power, and his government is supported by the most prompt and severe punishments. But in distant parts of his dominions, where influential headmen live, he may be little known, although as a matter of theory he is supposed to settle all graver disputes even in remote villages.[5]

175 643 The history of the Yao chieftaincies in MacDonald's time, and as told to me by my informants, is that of constant division into independent chiefdoms. In the Zulu and Bemba polities a strong state structure included a pattern of civil war and the main-

[1] MacDonald, *Africana*, i. 147–8.
[2] MacDonald, *Africana*, i. 32.
[3] MacDonald, *Africana*, i. 157.
[4] MacDonald, *Africana*, i. 156–7.
[5] MacDonald, *Africana*, i. 154–5.

2: Mitchell E-5 (1945-1949) 1956 ??? Yao ???

sonnel of the whole state under a new king.[1] but the Yao political units seem to have split into two factions when divisions appeared within them. The dissident faction left the parent chiefdom and established itself somewhere else as an independent entity.

The picture my informants have given me substantiates MacDonald's account, though his contact was mainly with Mangoche and not with Machinga Yao. My informants, however, placed greater emphasis than he did upon the importance of trade with the coast. A slave-trading trip was not a venture which the ordinary village headman could undertake with equanimity. The journey to the coast, to Quilimane or to Kilwa, was long and arduous, and strong military protection against bandits was needed. A caravan could only be sent by a chief or someone of like status, so that the coastal trade became the monopoly of the chiefs. Headmen who had ivory and slaves to send to the coast included them in the chief's caravan. When it returned, the headmen were able to collect calico and beads to the value of their contribution. Gun-powder also seems to have been a chief's monopoly. Thus, in fact, he did have some physical control over the military activities of his subject village headmen, since he could withhold supplies of gun-powder if he wished. But in a society where minor chieftains were intrinsically poised against each other, the maxim ' a chief without people is nothing ' had much more significance than it has to-day: a village headman's ultimate sanction was that he could withdraw his support from one chief and give it to another.

The Effects of Warfare Conquest

It was into a society thus organised that the first Missionaries came. I have already described how the Missionaries, by taking in runaway slaves, and by occasional armed combat, entered into political relationships with the chiefs. With the establishment of the Protectorate, the policy, clearly expressed in Sir Harry Johnston's letter,[2] was to stamp out slavery. This was done in numerous campaigns against the Yao chiefs [3] so that by

[1] See Gluckman, M., ' Succession and Civil War among the Bemba : An Exercise in Anthropological Theory ', *Human Problems*, xvi (1954), 6-25.
[2] See *Ibid.*, p. 29.
[3] See Chap. II, pp. 29-30.

2: Mitchell E-5 (1946-1949) 1956 F'27 Yao F'27

that the superior British militia had completely subjugated all the Yao chiefs who had resisted them.

British power initially became merely an element in the political relationships of chiefs: they used it against their rivals, as Kalembo used it against Cingwalungwalu,[1] or Mulemia against Kawinga. Yao chiefs did not unite in the face of their common enemy.[2] As the campaign against the slave-traders progressed, however, Yao chief after chief fell to superior British arms. They, who only a few years earlier were accepting the submission of refugees, themselves had now to 'grasp the leg of the White people'.

It is clear that they looked upon their submission to the Whites in much the same way as they looked upon the submission of refugees to themselves. To submit to a man was to accept slave or near-slave status. According to informants, Kawinga sent a large tusk of ivory[3] to the British as a placatory gift. His ceremonial knife, and the knives of his important headmen, were taken from them by Robert Codrington, Assistant Collector of the northern part of Zomba.[4] A chief with whom I was once discussing slavery expressed neatly the attitude of the Yao chiefs to their subjugation. He said: 'There is no slavery to-day—we are the slaves of the Government'. The chiefs who returned to the Protectorate, therefore, returned as subjects, and were fully aware of this. In the new regime, the former chiefs had to recognize a superior authority and the British Administration provided the framework within which the old rivalries had to be explored.

The chief's position in relation to his subjects as a result of this catastrophic change was, of necessity, weakened. When the slave caravans stopped, the chief's source of wealth disappeared, and with it much of his power. He was no longer much wealthier than his subjects. The wants of the people could now be more easily satisfied by the numerous trading stores which

[1] Mitchell, J. C., 'The Political Organization of the Yao of Southern Nyasaland', *African Studies*, viii, 3 (Sept. 1949), 141–59.

[2] Johnston mentions that Mulemia, Jalasi and Kawinga had planned a joint attack against the British in 1895. If this is so, the attempt was completely unsuccessful. See Johnston, H. H., *British Central Africa*, Methuen & Co. (London, 1897), 130. See p. 30.

[3] *The British Central Africa Gazette*, ii, 18 (Nov. 15th, 1895), reports that Kawinga sent in some ivory as 'indemnity' but was told to pay more and to send in the more guns.

[4] They are to-day in the Southern Rhodesia National Museum, Bulawayo.

2: Mitchell E-5 (1946-1949) 1956 FT7 Yao FT7

began to appear in the Territory. The chief in this situation had the same wants as his subjects but was in no way able to satisfy them. He was precluded by his position from becoming a labourer and thus securing a cash income, while his subjects, until recently dependent on his monopoly for their wealth, had been drawn into the new economy of the Protectorate and were comparatively affluent.

The cessation of warfare and slavery thus affected the prestige of the chiefs seriously. The Administration's policy was at first to impose a fine of guns on those who broke rules. In July 1892, for example, Chapola village on the south-west corner of Lake Malombe was fined 30 guns for being in possession of slaves.[7] Later the Administration introduced an ordinance requiring the registration and licensing of guns, and many guns were confiscated on account of breaches of this regulation. Not only were the Yao disarmed, but the Administration also punished those who broke the peace. At the same time the Government was pursuing an active policy against domestic slavery. For example, in the village of Chapola mentioned above, 26 slaves were released. The slaves, formerly bound to their masters by the physical sanction of being liable to death at his hands in cases of desertion, were now liberated. It is not surprising to find the Collector at Mlanje reporting, in 1895, that the power of Kuntirimanje and Matipwiri was failing, and that they were losing people.[8]

Statements of informants confirm that slaves were then starting to leave their erstwhile masters to set up villages of their own. In 1904, the Administration reported: 'The tendency is for the old large communities to be broken up; for the small man to collect a surrounding of friends and go off and build new hamlets in other localities'.[9]

From my own investigations, there appear to have been two possible reasons for this. First, communities may formerly have lived in consolidated groups in order to protect themselves from slave-raiders and other assailants. With the disappearance of the slaver and of war, the bond of the need for security would,

[7] *B.C.A. Gazette*, i, 110 (July 28th, 1894).
[8] *B.C.A. Gazette*, ii, 18 (June 15th, 1895).
[9] *The Annual Report of the Territory, 1903–4*, quoted by S. S. Murray (ed.), *Handbook of Nyasaland*, Crown Agents for the Colonies (London, 1932), 188.

2: Mitchell E-5 (1946-1949) 1956 FT7 Yao FT7

that in some cases the previous records or age of such persons would be found to be such as to preclude their selection to transact the responsible duties of Headmen under the Ordinance, and in such circumstances Residents were to consider the claims of other natives of good standing, intelligence and reputation residing in the section, who, having assisted the Resident in native administrative matters in the past, might be expected to carry out the duties efficiently, and who, at the same time, were known to enjoy the confidence of the natives with whose supervision they were entrusted.[1]

Elsewhere Murray writes, 'The system introduced by the Ordinance was in no way intended to revivify or perpetuate government by native chiefs. The position of Principal Headmen under the Ordinance was in no sense to be similar to the archaic one of the chief.'[2] Yet in the area in which I worked it was precisely the traditional chiefs who were made Principal Headmen—Jalasi, Nyambi, Kawinga, Liwonde and Malemia. In retrospect it is difficult to see how it could have been otherwise. Considering the sentiment attached to the chief in Yao society, it seems scarcely possible to conceive of leaders who 'enjoyed the confidence of the natives with whose supervision they were entrusted' who were not chiefs in the traditional sense.

In spite of its avowed intentions not to 'revivify or perpetuate government by native chiefs', the Administration proceeded to invest the traditional chiefs with its own power. 'Residents', Murray writes, 'were to indicate carefully by their attitude towards and dealings with Principal Headmen the fact that they were officially recognized as chiefs of their respective sections and that, as such, they were entitled to the respect and obedience of their people.'[3]

It would be wrong to imagine that the military actions at the end of the last century had completely destroyed chieftainship. Those who had resisted the Whites were driven out of British Territory but were allowed to return very soon afterwards. These chiefs then took up the threads of their life as best they could under the changed conditions. The degree to which the new Administration had become a force in Yao politics is illustrated by an entry in the District Book in Zomba. Kawinga III had died in August 1905, and the record reads: 'There were two

[1] Murray, *Handbook*, 131.
[2] Murray, *Handbook*, 130.
[3] Murray, *Handbook*, 130.

2: Mitchell E-5 (1946-1949) 1956 FT7 Yao FT7

175 claimants to the succession, Kambombo and Chiwalo. Their
633 claims were really very equal and His Majesty's Commissioner
(April 1906) called in Kambombo and the most important
• 643 headmen and decided the succession by their vote.' District
648 Books have many entries dating before 1911 showing that the Administration did not consider chiefs and village headmen insignificant.

The appointment of village headmen needed the approval of the Provincial Commissioner, but presumably the recommendation came from the District Resident. It is reasonable to suppose that the District Resident in turn had discussed appointments with the principal headmen. Whatever the mechanics of the appointment, however, the outcome was that most village headmen who held positions of prestige in the indigenous system of ranking became village headmen under the Ordinance.

The District Administration (Natives) Ordinance thus made official the unofficial relationship which had previously existed between the Administration and the chiefs and the village headmen. The traditional relationship of chief to village headman and village headman to villager, however, became suffused with a new significance. These relationships had become part and parcel of the extensive administrative organization of the British Empire.

The Modern Administrative Structure[1]

648 The Native Authority Ordinance of 1933 and the Native
692 Court's Ordinance provide the legislative framework for the
modern administrative system. Under Section 23(e) of the
643 Native Authority Ordinance, 'the rules, orders, proclamations, notices and appointments made under the District Administration (Natives) Ordinance were not repealed. The duties which had so long been incumbent upon chiefs and village headmen, therefore, continued unaffected.

The chief, however, was set up at the centre of a bureaucracy and given autonomy in a number of directions. The Native Court's Ordinance gave him legal powers to inflict punishment on his subjects; the treasury under his authority could raise

[1] I have dealt in some detail with the position of the chief in the modern situation in my article 'Political Organization of the Yao of Southern Nyasaland'.

2: Mitchell E-5 (1946-1949) 1956 F'77 Yao F'77

funds and could spend them. The chief could make rules and regulations in specific matters. 691

Burnt-brick court houses, burnt-brick offices and clinics have appeared at the traditional headquarters of the chiefs. A court clerk collects court fees and fines, issues receipts and records the cases in a register. A tax clerk issues licences and collects taxes, receives correspondence addressed to the chief and writes the chief's replies.[8] In addition, there are other functionaries—community workers, forest guards, agricultural demonstrators, sanitary inspectors, market clerks, well inspectors and so on. 692 693

In other words, the position of the chief is becoming more and more that of an administrative head-of-department.[8] His position *vis-à-vis* his subjects is coloured by this. The chief is at once the people's representative to the Administration and the Administration's representative to them.

[8] Compare Burnett's statement about the Ngoni: "the great warrior chief has become in effect the only member of the Administration who never goes home to Britain on leave". Burnett, J. A., *Politics in a Changing Society*, 172.

2: Mitchell E-5 (1946-1949) 1956 F77 Yao F77

The chief identifies a man who comes to see him in exactly the same way, and the Administration has adopted a similar system, except that it has its own definition of the village. During the initiation ceremonies, the initiands[1] are housed in long grass sheds which are subdivided into sections. Each section or room of the long shed houses the boys or girls from one village. If villages share a burial ground, they have allotted portions where they bury their dead separately. In these and many other ways the village is looked upon by the Yao as a distinct unit in the chieftaincy.

The chieftaincy in the old days was distinctly a territorial unit and all the villages within that area recognized the superiority of the chief. The boundaries of the old chieftaincies were marked by rivers and hills and fixed after conquest and agreement. They are still well remembered. Modern chieftaincies are defined in their limits partly by Government decree and partly by custom. When Principal Headmen were appointed, the districts under them were demarcated with 'due regard being given to the composition of the Native population'. The traditional areas under the various chiefs, therefore, were recognized by the Administration as districts, so that the districts or their sections almost coincided with the chieftaincies. Some disputes between chiefs over boundaries have occurred from time to time and the Administration has had to arbitrate. For example, the Provincial Commissioner of the Southern Province reported a difference between Liwonde and Kawinga in 1956,[2] but through time these differences have been eliminated.

Traditional and Administrative boundaries do not coincide in a few places, for two reasons. Firstly, the Administration has accepted an obvious and physical boundary in preference to an indistinct and social boundary. It has taken the Domasi River as the boundary between Nzumanje and Mpota, though in fact a few villages under Mbela, Kawinga III's son, live on the south side of the river, and fall for Administrative purposes in Nzumanje's area. Mbela is still very strongly associated with Kawinga in ritual and kinship matters. His dealings with the

[1] I am grateful to Prof. Schapera for suggesting this word for those who are undergoing initiation ceremonies. The parallel is with graduands, *i.e.* those who are undergoing graduation ceremonies.

[2] *Report of the Provincial Commissioner, Southern Province* (1956), 20.

Z: Mitchell E-5 (1946-1949) 1956 FT7 Yao FT7

Administration, however, must be through the chief Nyamanja.

Secondly, some discrepancy has arisen because the Administration has not recognized all the indigenous chiefs. This has occurred mainly in Jalasi's area where there are at least two headmen who as far as I can judge were chiefs in their own right before the British conquest. These are Mkumba and Namwera.

Mkumba was the father of Nkata, the original invader of this area whose chieftaincy later took the name of Jalasi. Mkumba moved into the southern part of Nkata's chiefdom where he settled. Nkata occupied the north. As far as I can gather, Mkumba held rights to the ivory in his area and made sacrifices for rain—the main attributes of chieftainship. He still holds both types of initiation ceremonies and tries cases not involving large compensation. Nowadays, the office still commands some respect, though the present incumbent himself is not highly respected. The village under him has broken up since his accession.

Namwera came into the area before the White invasion with a small following from Mataka's area in Portuguese East Africa. He obtained chieftaincy rights over a large tract of land. Though I have not been able to check this in Government records, informants tell me that he was originally a Principal Headman, but that he was deposed largely because of the intrigues of Jalasi III with a Government clerk. Nowadays, Namwera claims to be independent of Jalasi and is markedly hostile towards him. The village headmen who came into the area still recognize Namwera's authority and take their cases surreptitiously to him, if they do not involve compensation. But as far as the Government is concerned he is merely one of Jalasi's headmen, and if it comes to a trial of strength, Namwera will have to recognize the authority of Jalasi.

In general, however, the Administrative system, in incorporating the main indigenous chieftains, incorporated the indigenous organization in its framework. Kawinga as a Native Authority is the superior of Chiwalo, his 'sister's son'; of Chamba, his 'son'; of Mposa, his 'brother's son'; and of Ngokwe and Chikweo who came to seek his protection. Kawinga holds his position both by virtue of his indigenous rank as a descendant of the original Invader Kawinga, and also as a Government representative. Liwonde, also a Native Authority, resists Kawinga's

2: Mitchell E-5 (1946-1949) 1956 FT7 Yao FT7

claims to primacy, and by the ideology of the kinship system is equivalent in status. In Jalasi's area, once again, the indigenous status of the chieftaincy is shown by the Administrative recognition of Jalasi against Mkumba, who was a minor chief, and Nanwera, who had come to 'ask land from Jalasi', and who had to give some doves and some ivory for his chieftaincy rights in the area. 631 643

The relationships of Native Authorities to each other to-day are thus fixed partly by the Administrative structure, and partly by their historical backgrounds, and I have indicated that the structure the Administration imposed in the Yao areas was very largely determined by the indigenous structure which existed at that time.[1] The Administrative system to-day, therefore, supports the traditional structure.

The five chiefdoms with which this study is concerned stretch from Zomba in the south, almost to Fort Johnston to the north-east of the Shire River. These chiefdoms are Malemia in the north of Zomba district, whose area lies along the Malosa range of mountains north of Zomba as far as Mount Chaosi. Liwonde district stretches from Mount Chikala and Mount Chaosi in the south to Mount Maili in the north. This district contains the chiefdoms of Liwonde and Kawinga and the minor chieftains under them. In Fort Johnston district which stretches from the north of Mount Maili to Lake Nyasa are the chiefdoms of Jalasi, Nyambi, Katuli, Makanjila and an Nyanja chief Nankhumba. The chiefdoms of Jalasi and Nyambi abut those of Kawinga and Liwonde, and it is with these that we are mainly concerned. 631 643 131

Malemia, whose clan-name is *amwale*, was apparently the first of the Machinga chiefs to move into present-day Nyasaland from present-day Mozambique.[2] His group moved south-west past the north end of Lake Chiuta and settled for a while on Mount Maili. Malemia was closely followed by Nkata, from whom the Jalasi chieftaincy developed and whose clan-name was *ambewe*, and his 'father' Mkumba, who moved in westwards past the north end of Lake Chiuta into the Mangoche Highlands. Here, together with the help of Kawinga and Liwonde, they attacked the so-called Mangoche chiefs (Mlumbe, Chikowi, Kapeni, 631 643 175

[1] Chap. II.

[2] The history of this chieftaincy is set out more completely in 'An Outline of the Social Structure of Malemia Area'.

2: Mitchell E-5 (1946-1949) 1956 FT? Yao FT?

631 Maiguwiri, etc.), displaced them southwards and so established
643 chiefdoms of their own. Mkumba moved to the south and
175 Nkata set up a fortress on Mount Mangoche, from which vantage-point he resisted British conquest for many years. Kawinga and Liwonde, whose clan-name was also *andewe*, had moved in with Nkata but continued across the Shire River to settle in the Kongwe Hills to the west of Lake Malombe. Later, Kawinga and Liwonde re-crossed the Shire and moved south-eastwards until they reached Mount Chikala. This in the meantime had been occupied by Malemia. Kawinga and Liwonde succeeded in dislodging Malemia who retired to the Malosa Range, where he is situated to-day. Liwonde then left the mountain to settle on the east shore of the Shire River.

631 The arrangement of these particular chiefdoms in Administra-
643 tive districts therefore reflects the social relationships among the chiefs. Between Malemia and the two *andewe* chiefs, Kawinga and Liwonde, there is an uninhabited forest reserve and a mountain range. Liwonde and Kawinga who can trace their descent [61] matrilineally from a common ancestress and who are to-day perpetual[1] brothers, together with their minor chiefs, share the Liwonde district. In spite of the opposition of these two chiefs which arises from their position as chiefs of independent chiefdoms, they sometimes meet and visit each other. Chiwalo, who from the Administrative point of view is under Kawinga, is in fact more closely related to Liwonde and has much more to do with him. But Chiwalo's headmen usually appeal to Kawinga, not Liwonde, in their difficulties. Within Kawinga's area at a funeral or an installation ceremony of an important headman in the northern areas, representatives of the nearby chieftaincies Ngokwe, Chikweo, Chiwalo and Kawinga will be present. In the south, the representatives of only Chamba, Mposa and Kawinga are likely to be present. Headmen, if they come from Liwonde's area, do so because of kinship connection and not because they are representatives of Liwonde.

The relationships of Jalasi and to some extent Nyambi, with Kawinga and Liwonde, are much more distant. Kawinga and Liwonde stand opposed to Jalasi in spite of the fact that Jalasi shares their clan-name. I have never known of Jalasi coming to visit Kawinga or Liwonde. Jalasi's area extends well down

[1] i.e. the offices are fixed perpetually in this relationship. See p. 122.

2: Mitchell E-5 (1946-1949) 1956 FT7 Yao FT7

the Shire River to within about 15 miles from Liwonde's headquarters, and though he frequently tours his chiefdom in this area I have never known him to cross his boundary. The position of Nyambi here is interesting in that originally Nyambi's chiefdom was part of the Liwonde district. It was made part of this district in the early days of the Administration when Nyambi II, Nkata's sister's son who founded the chiefdom, opposed the reigning Jalasi and moved into the area where the chiefdom is now situated. The implication of Nyambi's being in Liwonde district was that he had to sit on District Councils in Zomba with Kawinga and Liwonde instead of with Jalasi in Fort Johnston. I understand that since the original Nyambi died his several successors have made requests to the Administration to be included in the Fort Johnston district. Finally in 1948 the request was granted and Nyambi's chiefdom was once more linked with his perpetual sun's in Fort Johnston district. 631 643

The opposition of the chiefdoms as wholes appears in other situations as well, often where it is not expected. For example, there are two tobacco markets in the area studied. One is in Nyambi's area and the other is about 25 miles away at Mlomba's village in the extreme south of Kawinga's area. Mlomba is a uterine brother of the present Kawinga. Chiwalo's chiefdom about Nyambi's and tobacco growers need to transport their produce only six or seven miles to the market in Nyambi's area. Yet several growers told me that they were taking their produce the 25 miles to Mlomba market because they felt in some vague way that the Chiwalo people got lower prices for their tobacco in the Nyambi market than the Nyambi people.

The cleavage between the chiefdoms is also expressed in their religion. Kawinga, Liwonde, Jalasi and Nyambi are all Moslems and very few of their followers are Christian. Malemia is a Christian and very few of his followers are Moslems. But between Kawinga and Liwonde on one hand, and Jalasi and Nyambi on the other hand, there is a cleavage in terms of a schism among the Moslems. One group, the *swaliki*, became centred at Jalasi's court village Majani. The *swaliki* believe that Islamic devotions should be accompanied by loud singing and chanting of Arabic tracts and by particularly vigorous dancing. Even at funerals this type of prayer is required. The other sect, the *sukuta*, centred at Kawinga's and Liwonde's court villages, 631 643 795

631 advocates the more orthodox type of Islamic devotion in which
643 a quiet restrained manner is emphasized. As far as I know the
785 swahili sect are confined entirely to Juma's chiefdom and the
adepts to Kawinga and Liwonde. In this manner, Nyambi's people side with Kawinga's and Liwonde's.

On the other hand, local informal organization is well de-
631 veloped so that Chiwalo who is at the point of juxtaposition of
643 Kawinga, Liwonde, Nyambi and Juma chiefdoms, may try cases
682 involving headmen from any of these areas, and they usually accept his arbitration. He is the nearest court house. The actual boundaries of the four areas, however, are very clearly recognized and Chiwalo realizes the limits of his jurisdiction. Though he may arbitrate in a difference between headmen, he would not dare to appropriate land outside his area. Headmen living on the boundaries of two chiefdoms arbitrate in each other's cases; the villagers under them intermarry. A village in Chiwalo's may
621 procure garden lands in Juma's area, and children may be initiated
631 at ceremonies held by headmen in other chiefdoms. There is no
643 clear break in the normal social relationships of people across the boundaries of chiefdoms, and their members interact as freely with each other as members of two villages of the same chiefdom. The cleavage between the villages on different sides of the boundary of a chiefdom becomes apparent only in special situations.

631 The formal relationships of the chiefs, set by the history of
643 their conquests and their kinship, and incorporated in and slightly modified by the Administrative framework, are overlaid by an informal local organization where the interaction of village headmen only conforms to the formal pattern when no agreement can be reached.

The Position of the Modern Chief

643 In ritual situations a chiefdom is clearly differentiated from its
769 neighbours, and many of these situations arise in the cult of
783 ancestor spirits. The ancestor cult has fallen
away almost completely among village headmen, but among the chiefs it is still strong, and appears particularly in the rain-prayers and the initiation ceremonies. Later, I shall discuss at length the importance of the chief's sanction before headmen may conduct initiation ceremonies. This is because the spirits

2: Mitchell E-5 (1946-1949) 1956 FT7 Tao FT7

of the ancestors of the chief are supposed to affect the welfare 643
of the initiands. Through some village headmen may conduct 769
initiation ceremonies they are unable to offer rain-prayers. These 782
are offered by a chief on two occasions. The first is in November, before the rains have started. The chief's wife and some women from the bigger villages in the near vicinity of the chief's village gather at his hut. They brew beer—above ewinke, the beer of the spirits—to be used as a libation. At sunset on the appointed day the chief goes to the shrine tree where some headmen have gathered, and pours some of the beer into a pot, partly buried at the root of the tree, while he invokes all the spirits of his departed ancestors—mainly matrilineal but occasionally some patrilineal. He then entreats the spirits to send some rain and to look after their "children" in the land. Sometimes a length of calico is hung on the tree as an extra offering. Should no rain fall the chief will have to repeat the offering until it does fall. When the rains have ended in March he makes a second offering "of thanks".

In the context of the present discussion, the important point 643
is that it is only the chief who can make this libation and offer 651
this prayer. If his plea fails the whole area starves, and no head- 769
man may supplicate his ancestors on his own behalf or approach 782
the chief's ancestors through his own ancestors. The grain for the beer comes from the various villages, but not on a fixed rate of levy. Some villages never contribute. The chief buys the offered cloth on behalf of his people. When in 1948 the cloth on the shrine tree was stolen, Chiwalo imposed a levy on the village headmen in the area so that a new cloth could be bought. Here the boundaries of the chiefdoms are important, and no headman outside Chiwalo's area was approached. A village headman from Jalasi's area, though geographically much closer to Chiwalo, relies on Jalasi's rain-offerings and may not approach Chiwalo or plead with him to offer a rain-prayer to his ancestors.

Another ritual situation in which the limits of the chiefdom 766
appear is during the institutionalized pillage on the death of a 661
chief. I have not been in any area when the chief has died, so that I rely here on the tales of informants. During the mourning rites certain feasts are held. The food for the mourning feast of a commoner or village headman is provided from his estate

2: Mitchell E-5 (1946-1949) 1956 FT7 Yao FT7

by his relatives. For the fours during the mourning at a chief's death the food is acquired by institutionalized pillage (*ciyisinde*). The villagers in a chiefdom are often first informed of the death of a chief by the appearance of men from his village. These men are by custom allowed to take from a village any article of food they can find—flour, a goat, some chickens, prepared relish, or whatever is lying around in the village. The owners of the food may not charge them with theft. This food is used in the funeral feast. The extent to which the chief's men may go became circumscribed after the White conquest. Previously, almost any crime short of murder could be committed under the guise of *ciyisinde*. More recently, owing to Government opposition, it has been restricted to the taking of smaller articles of food, such as flour and chickens. Some people are beginning to object even to this. The chief's funeral is a public affair and all his subjects may attend it. The effect of the *ciyisinde* is to bring together enough food for the chief's funeral feast. Here, as before, the chief's men may not cross the boundary for fear of reprisals, and the effect is to impose a levy in an informal way over most of the villages in the chief's area.

The Chief as a Symbol of Unity

The chief is a representative of his people and it is his particular duty to ensure their welfare and that of the chiefdom as a whole. His symbolic representation of the unity of his people is brought out clearly by his right to fines in cases involving bloodshed and arson. Strife and division in a chiefdom in the old days were likely to end in spilt blood and burnt huts so that the Yao associate bloodshed and hut-burning with dissension within the chiefdom.

Most other offences are against the individual and not the chiefdom as a whole: the case is brought to the chief so that compensation may be awarded. Adultery and theft thus are definitely civil offences. Nowadays, a fine is imposed, but this is seen to be a White innovation, and the money from it is looked upon as 'Boma' money.[1] In disputes where blood has been shed, however, the chief is entitled to fine the guilty party on his own account. The chief is said to be 'blinded' by the blood and a payment must be made to him before he may 'see'

[1] i.e. Government money.

2: Mitchell E-5 (1945-1949) 1956 FT7 Yao FT7

again. In the past, disputes hinging on murder had this aspect, though they were usually settled by a fine. Nowadays, of course, all murder cases are lifted out of the hands of the chief, but the special fine for bloodshed is still levied in cases of assault. When a man is convicted of assault in the chief's court he will have to pay three separate amounts: one to the victim as compensation, one as a fine to the Native Treasury, and one to the chief 'so that he may see again'.

A similar provision applies to cases of arson. When a case is brought to the chief because a man has burnt another's hut, the chief will say that the guilty man has 'brought a torch into his country'. The man convicted of arson will have to pay a special fine to the chief in the same way as the man who caused bloodshed. The association of the unity of the chiefdom with fire probably has some place in the attitude of the chief here. People who have come to a chiefdom as strangers are said to have come to 'seek the chief's fire',[1] and all the fires in the chiefdom are supposed to have been kindled from one flame. This expresses the unity of the chiefdom: the burning of the hut, therefore, symbolizes the introduction of discordant elements, as well as being a serious crime in itself.

The Chief's Judicial Functions

It is clear from MacDonald's writings that in pre-White days the chief settled most of the serious disputes in his chiefdom. Nowadays, this function of the chief has been given legal sanction under the Native Courts' Ordinance of 1933. 'A' grade courts have the power of imposing fines not exceeding £5, or 6 months' imprisonment and 12 strokes whipping; and 'B' grade courts may impose fines not exceeding £1 and imprisonment including hard labour not exceeding one month, but not corporal punishment. The Native Authorities, Jalasi, Nyambi, Kawinga and Liwonde, all have 'A' courts; the Subordinate Native Authorities, Chikweo, Ngokwe, Chiwalo, Chamba, Mposa, Mlomba, Stora, have 'B' courts. Only a certain proportion of disputes is brought for trial in these Native Authority courts. This is because, firstly, the Administration does not admit the legality of some disputes. Most of these centre on charges of witchcraft,

[1] A similar view of fire in the village context is discussed in Chap. V, p. 112.

692 but some also on having killed children by *ndaka*[1] (a disease
[673] caused by the mystical influence of sexual intercourse). Secondly, other cases not brought to the court are petty squabbles which do not involve heavy compensation. Examples of these disputes are personal quarrels, disputes over land ownership, petty theft and so on. The Native Authority's court handles mainly cases arising from adultery, which involve compensation varying from £1 10s. to £5; and theft and assault for which similar compensation may be payable. If the case is brought up to the
696 chief's court there is a mechanism whereby the compensation may be enforced. Ordinarily, in those cases which are not tried in the court house, there is no legal sanction behind the payment of the compensation, so that if a man defaults in payment no legal pressure can be brought to bear on him. It is for this reason that such cases are tried in the court house.

695 The cases are heard by the court assessors who call the wit-
693 nesses and cross-examine them. Sometimes a chief or his repre-sentative is in the court, as at Kawinga's court, but sometimes as in Chiwalo's court, the chief never comes to the court house at all. After the evidence is sifted, one court assessor takes the case to the chief and tells him about it. On the basis of the court assessor's analysis he awards compensation and imposes fines. The court assessor then takes this information back to the court house, reassembles the protagonists, and announces the chief's decision. The losing party has then the opportunity to appeal, first to the court of the Native Authority, if the case was tried in a Subordinate Native Authority's court, and then to the District Commissioner.

Cases tried by the chief in his extra-Administrative capacity are usually tried outside the court house. The same personalities take part in the trial but they act now with reference to a different set of values. The procedure is exactly the same, except that in Chiwalo's area the chief is present at the hearing. He sits somewhat aside from the main body of people but within hearing distance, weaving a mat or making nets while the case is being tried.

692 In minor cases, if either of the parties is dissatisfied with the
643 decision, he may take the case up to the chief for arbitration and, theoretically, may then take it from him if he is a Subordinate

[1] See Chap. V, p. 112.

2: Mitchell E-5 (1946-1949) 1956 FT7 Yao FT7

Native Authority, to the Native Authority, and eventually to the District Commissioner if the case is one which he will countenance. In practice, most cases reach the chief and go no further. Most people accept his decision. Thus the chief has important judicial functions. 692 643

The Chief as his People's Representative

In special situations where the welfare of the chiefdom as a whole has been endangered by an infringement of the mores, the chief may take action. For example, a chief prosecutes a village headman who allows a woman in his village to bear her first child before she has been through the *litiwo* ceremony. Every woman who becomes pregnant for the first time must undergo this ceremony, during which she is instructed in child welfare and child care. If she bears a child without undergoing the ceremony, she is said to have 'spoilt the country' (*ajalwice cilambo*), in the sense that she has besmirched its reputation.[1] 643 687 843

Chiefs usually call in magicians 'to smell out' those responsible for keeping back the rain.[2] When the rains fail as they did in 1948–9, their failure is held to be due to the magic of some evilly disposed person. It then becomes the chief's duty to call in a magician to indicate who this person is. The fees for this duty are paid by the chief himself on behalf of his people. 643 787 821

The chief also acts as a representative of his people when they are affected as a whole. For example, Nyambi called in a magician after man-eating lions had taken some of his subjects. This magician called for the hearth-stones and domestic utensils from all the villages in the area, and built them up into a pyramid over which he made some anti-lion medicine. This was to clear the whole chiefdom of man-eating lions. 643 789 731

Nowadays, the chief's representation of his people is seen most clearly in his position in the Administrative framework.[3] The chief represents the Administration to his people since they approach it through him. At the same time the Administration clearly treats him as the representative of his people and consults 643

[1] I was told in Mponda's area that the women undergo this ceremony *after* the birth of the child, but that it is still obligatory.

[2] *Kutawa ula*—lit. 'to tie or bind the rain', in the sense of to make it a prisoner.

[3] I have dealt with this aspect more fully in 'The Political Organization of the Yao of Southern Nyasaland'.

2:Mitchell E-5 (1946-1949) 1956 FT7 Yao FT7

643 him about the laws it intends to introduce which affect his people. The Administration transmits new Ordinances and Regulations to the chief and he must then relay them to the village headmen. When it advises the chief of a new law it thereby advises the people of his chiefdom.

The Origin of Villages in Modern Chiefdoms

175 621 We have thus far been looking at the chiefdom as an organization of villages united by their common interests in and association with one chief. But the villages that compose the chiefdom are not all equally closely integrated into the political structure. This is most clearly seen against the background of how the modern chiefdoms came into being.

175 621 563 By the time that the 1912 Ordinance was introduced the social composition of the chiefdoms had undergone some change from what it was before the White conquest. Before the White conquest the Yao chiefs had overcome the indigenous inhabitants of Southern Nyasaland. Some of these had been allowed to remain in the area as subjects. Others were enslaved. There were some Nguru, Nyanja and Mpotola village headmen who had come to seek the protection of the Yao chiefs.

175 621 166 During the conquest, the territory was thrown into confusion, and villages fled in abandon from their own into neighbouring chiefdoms both in Southern Nyasaland and Mozambique. When the Administration allowed the chiefs to return, most of the important village headmen and their followers returned with them. Kawinga, for example, was allowed to return, not to Mount Chikala but to the area immediately to the north of it. He brought back with him most of his important headmen who had fled with him to the country of the Mpotola chief Nkanyela, in Mozambique. Jalasi was allowed to return from Portuguese Territory in 1906,[1] not to his mountain fortress Mangoche, but to a smaller hill Sakalwe some miles to the east. He gathered round him a few of his important headmen.

When hostilities ceased, there was a certain amount of internal readjustment. Some villages which had fled to other chiefdoms in the Protectorate started to come back while others stayed behind. To-day there are villages here and there which had left their chiefdoms in the confusion and had then joined their present

[1] District Book, Fort Johnston.

2: Mitchell E-5 (1946-1949) 1956 FT7 Yao FT7

them follow the tenets of Islam in only the most cursory way. An Nguru therefore admits to being a Pagan more readily than a Yao, because he cannot identify himself with the Invading group.

Kinship with the Chief

The most important way in which the three categories differ, however, is in the degree to which they are associated with the chief. While the Invaders are identified with the chief because of their association with him in the invasion, they are also tied to him to a greater degree by various kinship links than the other categories of headmen.

Although the exact composition of the Invading groups will never be known, it appears from the accounts of old men, that the groups were made up primarily of the chief and his younger brothers, together with their sons and slaves, and some unrelated followers. Other chieftaincies and village headmen have sprung from the chief's lineage. For example, Kawinga was the leader who brought the present Kawinga-Liwonde group into Nyasaland. The first man to be called Kawinga left the Lujenda River where he was living with an elder relative called Nsanama, whose exact genealogical connection I have never been able to determine. Accompanying them was Liwonde, a younger brother of Kawinga. As they passed through the country just west of Lake Chiuta they encountered the Mpotola under Chikweo, and these joined up with Kawinga and his relatives and went to Kongwe on the west side of Lake Malombe (in the present Kalembo's area). From this place they were displaced by the Ngoni and returned east and south to the Chikala Range where they displaced Malemia and occupied the heights. Subsequently, Liwonde left the mountain and went to live on the Shire River where the old Government station used to be. From this point on, Kawinga and Liwonde seem to have acted almost independently. Nsanama seems to have stayed with Kawinga. Chamba who was the son of the first Kawinga now set himself up as a chief on the south side of Chikala and Chaoni. Mposa, the son of the first Liwonde, moved to the shores of Lake Shirwa and set himself up there. Chiwalo, a sister's daughter's son of the first Kawinga, set himself up on the northern fringe of the area. Recently Stora, a sister's daughter's daughter's

2: Mitchell E-5 (1946-1949) 1956 FT7 Yao FT7

daughter's son of the first Kawinga, has been recognized as a subordinate Native Authority. Village headmen also develop in the same way from the relatives of the chief. Among the 205 village headmen who are of Invader stock, there are 62 who are

TABLE VII

PROPORTIONS OF RELATED AND UNRELATED HEADMEN AMONG THE INVADERS

Chief's Relatives						Non-Relatives	Total
Direct			Clan				
Mat.*	Pat.	Aff.	Mat.†	Pat.	Aff.		
17 8·3	35 17·1	10 4·9	37 18·0	22 10·7	12 5·9	72 35·1	205 100%
30·3%			34·6%			35·1%	

* Includes the six chiefs themselves.
† Those who have the same clan-name.
Mat. = Matrilineally related ; Pat. = Patrilaterally related ; Aff. = Affinally related.

either chiefs, their direct matrilineal relatives or their direct patrilateral relatives. This represents 30·3 per cent of the total. Of these 35 or 17·1 per cent are patrilateral relatives.

The chief's sons occupied a very strong position in the early Yao chiefdoms. Most sons of the early chiefs were their children by slave-wives. Since there was no one on their mother's side from whom they could inherit rank, it follows that they could only expect to achieve status through their father, the chief. Yet they were not, as his younger brothers and his sisters' sons were, a danger to him, because they were not in the line of succession and had no reason to wish his death. On the contrary, the bonds that unite father and son in Yao society are strong but not formal. The chief's sons, the *acibwana*, therefore came to occupy some of the most trusted positions under him. They became his military leaders ; they led his caravans to the coast and back ; they were the messengers who represented him to foreign chiefdoms and to the Whites when they came. In these positions the chief could trust his sons, because he knew that they

2: Mitchell E-5 (1946-1949) 1956 FT7 Yao FT7

622 had no hostile axes to grind. Younger brothers and sisters' sons
643 might have used the military forces against him, or they might
644 have squandered the wealth of the caravans because they had a jural right to it. As the sons grew older they were given groups of slaves and slave-wives to look after, and so they became village headmen under the chief. Many of them came to have initiation rights and hold other positions of importance.

622 The chief was also connected to other Invader headmen through
643 marriage. It is clear that affinal links become in time cognatic,
602 but the marriage of the chief with a headman's sister fixes
601 the relationship between that headman and the chief in perpetuity. The succeeding chief does not look upon the village headman who is his mother's brother's wife's brother as a father-in-law, as he would if he were a commoner, but instead calls him 'brother-in-law'. Also, all the successors of the village headman call all the succeeding chiefs by this term, so that the political structure of the area becomes phrased in a kinship idiom: the quasi-kinship of headman and chief in this context becomes suffused with political meaning. The number of village headmen who claim some affinal relationship to the chief is not great—only 10 of the total of 205 (i.e. 4·9 per cent).

TABLE VIII

PROPORTIONS OF RELATED AND UNRELATED HEADMEN AMONG THE NEWCOMERS

622
643
602

Chief's Relatives						Non-Relatives	Total
Direct			Clan				
Mat.	Pat.	Aff.	Mat.	Pat.	Aff.		
0 0	13 3·4	15 3·9	24 6·3	13 3·4	16 4·2	300 78·8	381 100%
7·3%			13·9%			78·8%	

Among the Aborigines and Newcomers, naturally, there are very few direct relatives. There are, of course, no matrilineal relatives. The patrilateral relatives amongst the Newcomers (3·4 per cent) are those of Kawinga who have moved into Chamba and Liwonde areas. There have been various mar-

2: Mitchell E-5 (1946-1949) 1956 FT7 Yao FT7

riages between the chiefs and Newcomers and as a result there are 3·9 per cent of the Newcomer headmen who are linked affinally to the chiefs. The proportion of affinally-linked headmen in the two categories is approximately the same. The major differences are among the proportions of headmen linked by matrilineal and patrilateral ties to the chief.

Clanship with the Chief

A more numerous category is those who are related to the chief, not by common descent but by clanship.

Informants tell me that before the Whites came to Nyasaland, each person took the clan-name of his mother. People who had the same clan-name were said to be ' of one kind ' (*lukosyo lwamo*). The word *lukosyo* had no other meaning but ' kind ' or ' sort ', and the word *mtundu* is frequently used as a synonym. If a man is asked his *lukosyo*, he is as likely as not to give the reply ' Yao ' or ' Machinga ', i.e. his tribal origin. By extension it follows that if two people have the same clan-name inherited from their mothers, and their mothers in turn have inherited it from their mothers, and so on, eventually there must be a common ancestress. The two people therefore call each other ' brother '. However, among the Yao there are no stories of the origin of clans and only vague traditions of a common clan ancestress. I often questioned Yao about their clan-names and joked with them that though they were Invaders they shared the same clan-names as their subjects. The clan-names I found among the Machinga Yao were *apiri*, *amilasi*, *ambewe*, *abanda*, *asimbiri*, *amwale*, *angoma*, and these clan-names also appear among the Marawi group of tribes (Cewa, Maŋanja, Cipeta, Mbo, etc.), the Lakeside Tonga of Chinteche district, and the Mpotola and Lomwe or Nguru from Portuguese East Africa. The Achisi Yao under Katuli, a group related to the Mataka Yao from Portuguese East Africa, do not have these clan-names, nor, as far as I know do the Yao in Tanganyika. Clan-names, therefore, may be a feature of the Machinga Yao in Nyasaland, acquired as a result of their contact with the Marawi and other indigenous peoples of that country. It is significant that the clan-names are not as a rule common Yao words for everyday objects in the same way that clan-names amongst, say, the Bemba of Northern Rhodesia, are names of plants, animals and other natural phenomena. The word

2: Mitchell E-5 (1946-1949) 1956 FT7 Yao FT7

622 *amilasi* is used for bamboos and once an informant when pressed
643 told me a tale of a group of people who in dire starvation ate
614 bamboo leaves and were thenceforth called after the bamboos. This story, however, was discredited by others and I pass it off as unimportant. There is, however, some evidence that the words *apiri amilasi*, *ambewe* and so on, are commonly used in Nyanja, and possibly amongst the Lakeside Tonga who were once part of the Marawi peoples, for objects other than clan-names.

614 Informants say that people with the same clan-name could not
582 marry in the past,[1] so that the clan appears to have had the characteristics of an exogamous descent group. The position to-day is vastly different. Not only do people take the clan-names of their fathers, but many young people do not even know their clan-names at all.

614 At this point I should make it clear that the modern confusion
611 about clan-names is no doubt partly due to the emphasis placed
567 on patrilineal descent by the purveyors of White culture, the Administrators and the Missionaries, and also by the same emphasis in Islamic tradition which has influenced most Yao groups. Another factor in the situation is that slave descent still markedly affects social relationships in modern Nyasaland. Its significance here is that when a man took a slave-wife in the old days, his children by her took his clan-name, and not hers. Patrilineal descent of the clan-name therefore tends to point to the slave origin of a person. People who are able to point to a freeman ancestry are proud of this fact and are proud to be able to claim a clan-name associated with a long line of matrilineal ancestors, particularly if there were some well-known men among them. On the other hand, I found it a fairly safe indication that, if I could find no information about an ancestress, particularly her clan-name, then I was dealing with a group descended from a slave. A third factor is that some people
614 explained their lack of knowledge of a clan-name by the state
611 of social unrest and confusion at the end of the last century. As a result of the incursions of the Ngoni, Nguru and slave-raiding Yao and Arab groups, and finally the punitive expeditions of the British and the Portuguese, villages were destroyed and groups annihilated. People lost contact with their relatives, even

[1] Confirmed by Hynde, R. S., 'Marriage and relationship among the Yao', *Nyasa News*, vii (1895), 217–18.

2: Mitchell E-5 (1946-1949) 1956 FT7 Yao FT7

their parents. Therefore many people who were children then, but adult to-day, say that their parents were 'lost running from the wars' and that they were never told their clan-names. 614 611

Whatever are the factors which have led to the comparative lack of importance of the clan-name in the social relationships of commoners to-day, the clan-name has preserved its significance in the political structure. I have already said that the clan-names associated with particular village headmanships and chieftaincies are well remembered, and this fact is not without significance. It seems likely that the clan-name was used in earlier times by groups as a method of claiming protection. The same set of clan-names appears throughout the tribes which surround the Machinga Yao. It seems likely that the adoption of clan-names facilitated their incursion into the country, and it is certain that insurgent Yao groups have used the clan-name as excuses to move into an area, and gradually to extend their dominance over it. 614 622 643

For example, in Malemia's area there is an Nyanja village headman called Nyani, who has the clan-name *amwale*. Stannus reports that when Malemia moved into this area he claimed brotherhood with Nyani because of the clan-name, and was able to obtain from him the land extending from the Likwenu River to the Namadsi River, a district 30 to 40 miles long.[1] Again when Kawinga fled from Chikala after the British raids on it, he went to the land of Nkanyela, an Mpotola chief in Portuguese East Africa, who is also an *ambewe*. That the clan-name is used essentially in this political field is illustrated by the relationships of Mposa to Mbande. Mposa, the son of Kawinga I, settled in the country of the Nyanja chief Mbande, who had the same clan-name as Mposa, viz. *amilasi*. Mposa calls Mbande 'brother' to-day and Mbande holds a position of honour and rank in Mposa's chiefdom. It is significant that other village headmen such as Cilombo, Mbalika and Mkwinda also have the same clan-name, but they do not claim kinship to Mposa. In modern times, when there is no longer any great danger to be incurred in moving from one part of the country to another, it seems likely that the necessity for some mechanism, whereby the friendship of otherwise hostile groups could be secured, falls away. In other words, the significance of the clan-name is gradually disappearing as its functions atrophy.

[1] Stannus, 'The Wayao of Nyasaland', 237.

2: Mitchell E-5 (1946-1949) 1956 FT7 Yao FT7

614 Relationship may be claimed not only through having the
601 same clan-name, but also by patrilateral and affinal clan ties. For example, one of the early Kawingas is supposed to have married an *abanda* woman. Therefore Chikweo, whose clan-name is *abanda*, calls Kawinga 'brother-in-law' (*alamu*). Some of Kawinga's village headmen also call him brother-in-law because of the clan-name. Ngokwe, whose clan-name is *asimbiri*, had an *amilasi* father, so that many of his *amilasi* headmen call him 'son'.

614 Here, as before, there are more Invader headmen who claim to be clan relatives of the chief (34·6 per cent) than Newcomer
622 headmen (13·9 per cent) (see Tables VII and VIII). Once again
643 the proportion of headmen who claim affinal links to the chief is approximately the same in the two categories and the main difference is in the proportions who have the same clan-name and who are clan-patrilateral relatives in the way I have explained. I have mentioned that though many headmen have the same clan-names as the chiefs or the clan-names of the chiefs' fathers, they do not all claim to be clan-relatives of the chiefs. There is no reason to suppose that the distribution of clan-members is different between the Invaders and Newcomers, so that it seems likely that more Invaders claim the clan-relationship to the chief when they can, than do Newcomers.

Unrelated Headmen

622 The striking difference between the two main groups of head-
643 men is in the proportion not related to the chief. Among the Invaders only 35·1 per cent of the headmen cannot claim some kinship link to the chief. Among the Newcomers, however, roughly double that proportion (78·8 per cent) are in this position. Among the Invaders some of the unrelated headmen hold positions of importance by virtue of their independence of the chief. These are the *nduna* whose functions I describe later.[1] Among the Newcomers, however, there are no *nduna*, so that this difference between the categories is one of the most important.

In Tables VII and VIII I have omitted a total of 105 villages, 93 of which were small villages whose relationship to the chief I did not record. All these villages were settled in distant and inaccessible places and I asked about them from the chiefs and

[1] Chap. IV, pp. 92–3.

2: Mitchell E-5 (1946-1949) 1956 FT7 Yao FT7

their councillors at the courts. If they were relatives of the chief it is almost certain that he would have mentioned them. We may assume then that the true proportion of unrelated headmen among the Newcomers is, as we would expect, very much greater than among the Invaders.

Of the total of 424 Administrative villages there were ten in which I did not record the formal relationship to the chief. In Table IX I set out the proportions in these categories among the Administrative village headmen, and there is no radical difference between these proportions and those for all village headmen.

TABLE IX

PROPORTIONS OF RELATIVES AND NON-RELATIVES AMONG ADMINISTRATIVE HEADMEN*

	Chief's Relatives						Non-Relatives	Total
	Direct			Clan				
	Mat.	Pat.	Aff.	Mat.	Pat.	Aff.		
Invaders . .	18 (13·2)	23 (16·9)	6 (4·4)	24 (17·6)	11 (8·1)	9 (6·6)	45 (33·1)	136 (99·9 %)
Newcomers .	0 (0·0)	9 (3·5)	12 (4·7)	20 (7·8)	11 (4·3)	12 (4·7)	193 (75·1)	257† (100·1 %)
Total . .	18	32	18	44	22	21	238	393

$n = 6$; $\chi^2 = 90·5$; $p = 0·0001$.

* This table excludes the 21 Aborigines.

† Excludes 10 villages for which I have not recorded this information.

To summarize, we may characterize the Invaders as Yao, Moslems, and associates of their chiefs by historical connections and kinship ties. The Newcomers and the Aborigines on the other hand are of different tribes. They have more diverse religions, are not connected to the chiefs by kinship ties as closely as the Invaders are, and do not share with them the strong bond of being co-Invaders. It is in the struggle for prestige and rank that these bonds with the chiefs assume significance.

2: Mitchell E-5 (1946-1949) 1956 FT7 Yao FT7

in the ritual of the chieftaincy more than Newcomers do; provide the chief's councillors; pay rain-levies and in other ways express their closer tie with him. But there is no rigid class structure based on tradition. All villages are liable to break up. If for any reason the village's internal cohesion begins to weaken, its members scatter and it disappears as a political entity. Invader as well as Newcomer villages may thus disintegrate. The smaller sections of an Invader village which now set up villages of their own have to compete with the larger and more united villages of Newcomer origin. Another facet of the political process, therefore, is the continual competition of village headmen who are trying to maintain the unity of the villages under them, and to increase their following, so that their status against the chief and the other village headmen may be enhanced.

Marks of Rank

In the vernacular it is the *name* of the village which is said to be important.[1] This name is usually taken from the founder of the village and is assumed by a new village headman when he succeeds to the position: when a new village is founded the headman gives it his name to distinguish it from the parent village. But the importance that is ascribed to a name is clearly the importance of the corporate group which it represents. The headman is an incumbent of a social status, the prestige of which is drawn from the corporate group which he represents in his public dealings.

The prestige of village headmen is shown particularly in the degree of deference accorded to them by other village headmen. The headman with the highest prestige is of course the chief: the original leader of the Invaders. Below him may be ranked the rest of the village headmen in a relatively fixed pyramidal hierarchy, determined by a number of factors which I shall outline later.

The dress of important headmen is often an indicator of prestige but this criterion is not infallible nowadays when labour migrants, craftsmen and tobacco growers can afford to buy better clothes than many headmen. But it is usually a fairly safe guess that when a man carries a long stick and is dressed in long flowing

[1] *Lina lya kulungwa*—lit. 'the name is great'.

622 annuity. This recognition publicly announced their superior
554 status, because not all headmen could be Administrative headmen.
648 We do not know exactly how the Administrative headmen were appointed when the Ordinance was introduced. The observable results, however, are that no headman, as far as I am aware, who was of superior status in the indigenous ranking system, is not an Administrative headman to-day. Being an Administrative headman is then in itself an indicator of rank.

622 Rather more important than this is the right to hold initiation
554 ceremonies. MacDonald says that these rights were held by the
643 chief only, but it is not clear whether the word 'chief' used here
415 refers to the village headmen or the 'chief of the land'. Nowadays, the rights are held by village headmen as well as the chief.
769 The right to hold initiation ceremonies is signified by the possession of a small flat basket (*ciselo*) in which the oblational flour
881 for the ceremonies is carried. When a chief grants a *ciselo* or oblational basket to a village headman, what in fact he does is to grant him permission to approach the spirits of his ancestors. The headman uses the basket on three occasions during the initiation ceremonies. First, before the ceremony is announced he pours a little cone of sorghum meal at the root of a special tree in or near the village. This tree is known as the *nsolo*, or the shrine-tree where all offerings to the ancestors are made. While he works the flour through his fingers to allow it to fall in a cone, he calls on his ancestral spirits and asks them to intercede on his behalf with the spirits of the chief's ancestors. He then formally requests permission to hold the initiation ceremony. This cone is left intact through the night. Should it collapse the interpretation is that the spirits are not willing that the ceremony should take place and it is postponed for some days. Offerings are made until eventually the cone, by remaining intact through the night, indicates that all is propitious for the ceremony
622 to be conducted. The second occasion when the oblational
554 basket is used is when the village headman or chief goes down
643 to the grass sheds where the rites of segregation and aggregation
415 take place. Here he pours flour over a twig and begs the safe
881 conduct of the initiands through this physically and mystically dangerous period. Third, each individual initiand, and his or her mother, is touched on the forehead and forearm with the flour on the evening that the initiands leave for the grass sheds. During

2: Mitchell E-5 (1946-1949) 1956 FT7 Yao FT7

the last rite the owner of the oblational basket exacts a payment of threepence or so from each parent. The headman does gain financially from the initiation ceremony, but it would be wrong to imagine that this is the only reason why he should want to have the right to hold it. The competition for the rights, which are limited to a few, is part of the general political process whereby village headmen compete for privileges and advantages over their fellows.

Village headmen may hold either the boys' or the girls' initiation ceremonies, or both. Sometimes, when they hold both, they delegate the girls' ceremony to a younger brother or some other relative without referring to the chief. For example, Kawinga's clan relative and important retainer, Ngalawanga, had the rights to both initiation ceremonies, and he allowed his perpetual 'son' Isa [1] to hold the girls'. Also in Nyambi area, Majaja, who had both initiation rights, allowed his perpetual 'son' Nantunga to have the girls' ceremony. It is generally conceded that the right to hold the boys' initiation ceremonies is more valuable than the right to hold the girls'. H. L. Duff, writing in 1906, had also noticed this when he wrote:

> The respective ceremonies seem to be considered as on a somewhat different footing, for the boys' *inyago* can properly be held only at the village and under the patronage of, so to say, the paramount chief of the neighbourhood, whereas the girls' initiation may take place under the auspices of an inferior headman. This distinction is still jealously observed and any breach of the chief's privileges is apt to lead to bitter dispute.[2]

The sanction the chief holds over the headmen in this respect is mystical. A village headman believes that the initiation will be a success (that is, that the initiands will be free from the harm of wild beasts and illness, or the circumcision wounds of the boys will heal quickly and well), only if the approval of the chief's ancestors is obtained. He cannot hold the initiation ceremonies, unless he has obtained the basket from the chief.

Most people still follow tribal initiation customs, but in the extremes of the area in which I worked, religious ideas are bringing about a change. In the north in Jalasi's area where Islam

[1] The first Isa was the son of Ngalawanga and this relationship is preserved by the modern incumbents of the headmanships. See Chap. V, p. 122.

[2] Duff, H. L., *Nyasaland under the Foreign Office* (London, 1906), 312.

2: Mitchell E-5 (1946-1949) 1956 FT7 Yao FT7

Arabic greeting to their seniors. This is done by placing the left hand on the chest and bending slightly forward to the village headman, saying, '*Subaye*'. The senior should then respond, '*Alaye*'. Also, important headmen are usually buried in the centre of the village, not in the common graveyard. The tomb of an important headman or personage, usually built of stones, concrete or brick, is called *nsati*. The right to bury in the village must be obtained from the chief 'because the land is his', and in Kawinga's area a fee of 6*s*. must be paid to him.

622 554 576 766

The Struggle for Government Recognition

Thus far, I have been discussing the ways in which the rank of village headmen may be expressed. I now describe the way in which these marks of prestige are associated in the three categories of headmen we have distinguished, and in what way the competition between them is phrased. I have already described how all the chiefs in the areas to which I am referring are all successors of the original leaders of the invasions, and are usually the present Government representatives or Native Authorities.

622 554 643 648

The people must recognize the rank of chief because mystical beliefs prescribe activities in one direction, and because the limiting structure of the White Administration does so in another. A village headman cannot hold initiation ceremonies without the permission of the chief because of the mystical sanction, but the chief also has legal authority over his subject headmen. He as Native Authority is recognized by the Government and is its representative to his people. The Native Authority Ordinance (1933) specifically imposes penalties on those who do not recognize the authority of the chief. Under Section 12 of the Ordinance, the Native Authority may arrest without warrant any person who is accused of failing to obey his order or direction, interferes with his lawful duties, professes to be a chief or assumes the duties of a chief without Government approval. Under Section 13(*i*) severe penalties are imposed on any person who conspires against or in any way attempts to undermine the lawful power and authority of any chief or Native Authority. His position is therefore greatly strengthened against the village headmen and I have been told of one or two prosecutions by chiefs under this section. Nowadays, the mere threat of

2: Mitchell E-5 (1946-1949) 1956 FT7 Yao FT7

622 action under this Ordinance is sufficient to cow his opponents.
643 Therefore, the chief may also control the rise to power of his
554 headmen because he is a Government official. At the same time
648 a village headman may not move away to form a chieftaincy of his own: should he migrate with his followers nowadays, he will always find himself under a White system of Administration which upholds some other chief against him. The rank system must operate within a circumscribed framework and in reference to the chiefs.

622 I have already mentioned that being an Administrative village
554 headman is a mark of prestige. Most of the struggle for rank revolves around this axis. Under the 1912 Ordinance, village
648 headmen were only recognized if they had at least 20 taxable huts under them and they were paid a small annuity proportionate to the number of their taxable huts.[1] Before a headman could be recognized, therefore, he had to gather around him at least 20 tax-payers. After a headman had been recognized, the more villagers he could attract the higher his annuity. This situation is one with which the Yao headmen were long familiar. It is indeed the same process that went on before the Whites came, and that was outlined so clearly by Duff MacDonald, except that it is now cast in slightly different form. In consonance with the new money economy, superior status, marked by more dependants, brings a higher financial reward. But it would be false to imagine that the prospect of financial gain is the only spur to a village headman's attempts to enlarge his following. A headman of a large village as such, is still a 'big' village headman.

622 A headman who has sufficient followers to enable him to
643 press a claim for a 'book' goes to the chief for it. The chief
554 considers the merits of the case, but is unwilling to grant too many 'books' in his area. If he supports the claim the matter is
648 referred to the District Commissioner, who considers the application, not in terms of the indigenous struggle for rank, but in terms of general Administrative considerations, such as finance,

[1] A definite rate of remuneration was fixed in 1918: it was computed at 10*s.* for every 300 taxes. See Murray, *Handbook*, 142. Under the 1933 Ordinance the remuneration was fixed at 4*d.* per Government tax of 6*s.* to a village headman and 2*d.* per 6*s.* to a Native Authority. *Report on Native Affairs for the Year Ended 31st December 1933*, Government Printer (Zomba, 1934), p. 5.

2: Mitchell E-5 (1946-1949) 1956 FT7 Yao FT7

and the ease of administering groups with centralized authority. If he agrees, the necessary alteration is made in the tax-registers, and the new Administrative headman is paid his annuity and is called up by the District Commissioner whenever he holds a meeting. To the District Commissioner the chiefdom is made up of the villages on the tax-register, and in a situation of political importance he calls on the headmen of those villages for decisions. For example, when a chief was being installed, the District Commissioner called each Administrative headman forward and asked him whether he agreed to the succession. When the District Commissioner wishes to discuss any matter with a villager he calls forward the Administrative headman. The position of village headmen in the political structure becomes more effective after they have been recognized by Government.

I have no accurate measure of the proportion of all village headmen who are recognized by Government. From my records the percentage of Administrative village headmen out of the total of recognized village headmen is:

	No. Admin. Villages	% of Total recognized
Kawinga	160	84
Liwonde	104	71
Mposa	30	48
Chikweo	48	43
Ngokwe	21	40
Chamba	61	39

I have full records for the smaller chiefdoms, Mposa, Chikweo, Ngokwe and Chamba, but I know for certain that the figures for Kawinga and Liwonde are incomplete. My fullest and most reliable records are for Ngokwe and Chikweo, so that we may estimate roughly that less than half of the village headmen are Administrative village headmen.

Naturally the village headman, whose taxable population will be reduced by the granting of a new 'book', opposes this in the same way as his ancestor opposed the emigration of his village members in pre-White days. In 1947, in Jalasi's area for example, there was an argument hinging on this.

2: Mitchell E-5 (1946-1949) 1956 FT7 Yao FT7

622 554 691 Mlima was a village headman of long standing and had been recognized as an Administrative headman. Ngwaya was a headman who had come to settle under Mlima.[1] After some years Ngwaya felt that because he had his own village he should be given a 'book' and receive money from the Government. Mlima however resisted the claim, saying that his 'book' had been given to him by Jalasi. Both went to Jalasi's court so that the difference could be resolved. Jalasi rejected Ngwaya's claim and upbraided him for being recalcitrant. Ngwaya was fined 9s. and ordered to pay £1 to Mlima in compensation.

622 554 643 691 A rather more complex case brings out the position of the chief, the Administration and the conflict of the prestige-giving principles of historical primacy and White recognition.

In 1948, an Administrative village headman, Kalonga, from Nyambi's area, decided to migrate down to the more fertile land along the banks of the Shire River. This land was in Jalasi's area, and it was partially occupied by a minor village headman called Malilo. Kalonga had already selected his site for the village when Malilo came up to him and told him that he was the first in that area and that Kalonga should have asked him to indicate a building site. Kalonga, on the other hand, pointed out that he was an Administrative headman and that Malilo was not, and there the matter rested. In time Kalonga, because of his official position, became better known than Malilo. Malilo was jealous of this prestige and in due course went to Jalasi and complained that Kalonga was 'getting too big for his boots'[2] and that he was only a Newcomer into that area. Jalasi sent for Kalonga.

At the dispute in front of the chief, Malilo reiterated his complaint. Kalonga merely pointed out that Malilo was jealous of his 'book'. Jalasi dismissed the case reminding the two headmen that it was he who was chief of the country. Shortly after this, Kalonga went to Jalasi alone and told him that Malilo had told him that he, Jalasi, was no chief because he should have taken the 'book' and given it to Malilo. Jalasi said, 'It is impossible to change over the "books" which are written by the Whites', and then sent a messenger to bring Malilo to court. When he came he denied the tale and said that as far as he knew the only reason for Kalonga's animosity could be that he had refused to give him the *subaye* greeting. Jalasi informed both headmen that they were to be independent of each other. Malilo

[1] *Kwakulipatika*—lit. one who had made himself a slave.

[2] *Kulikweyya*—reflexive causative of the verb *kukwela*, to climb, i.e. to cause oneself to climb or to exalt one's status.

2: Mitchell E-5 (1946-1949) 1956 FT7 Yao FT7

was to report strangers coming into his village area independently of Kalonga. Nowadays, there is much tension between the two headmen and they summon each other to court on the slightest pretext. The peace is kept only by order of Jalasi. On the whole, however, it is Kalonga who has the higher status and superior prestige.

Unfortunately I have no figures to show how large a village becomes before its headman applies for Government recognition. The average number of tax-payers under village headmen who have just been granted 'books' might have provided this information, but I was unable to collect it. Formerly, they could become Administrative headmen only if they had more than 20 tax-payers under them. Nowadays, however, owing to differential fertility and the reduction in size of villages because of internal dissension, many of the Administrative villages (22 per cent) are smaller than the 20 tax-payer limit. They, however, retain their 'books'. I know that often within the Administrative villages of important headmen or chiefs, there are contained some minor villages bigger than some Administrative villages which are farther away. For example, in Chiwalo's own Administrative village, I know that the villages of Selemani, Ali Kasoka and Ntapasia are larger than many Administrative villages. It is not only the size of the village which allows a headman to apply for a 'book'. It is his relative status in the community. Men of higher rank than Selemani, Ali Kasoka and Ntapasia could probably approach Chiwalo and ask him for a 'book'. But these three are Newcomers. Selemani was a refugee from the Portuguese wars and went to live in Mlumbe area in Zomba district. He came to Chiwalo's area in about 1930. Ali Kasoka moved in about 1940. Ntapasia came about 1921. But they dare not approach Chiwalo himself to ask for a 'book'. Here Chiwalo's rôle of chief is compounded with his rôle of Administrative village headman so that they would be asking Chiwalo voluntarily to reduce the size of his Administrative village. It is only when their villages become conspicuously large that headmen may begin to force the chief's hand. They have always one sanction they can bring to bear on the chief—they can threaten to move out of his area into another chiefdom. The chief may not retain any of his subjects by force. If they express a wish to live in another chiefdom he cannot stop them. On the other hand, useful as this weapon

2: Mitchell E-5 (1946-1949) 1956 FT7 Yao FT7

622 is when it is used by an Administrative village headman, as I
554 shall illustrate later, it will not serve a minor village headman
643 much to move out of one chiefdom to another if his object is to become recognized as an Administrative village headman. If he goes to another chiefdom he is automatically regarded as one of the most junior of the headmen. If he goes to another chiefdom as an Administrative village headman already, he takes with him his 'book' and to some extent the rank associated with it.

162 The size of Administrative villages as measured by the number
621 of tax-payers in them is about equal in all three categories
622 of village headmen. Table X sets out the distribution. The

TABLE X

DISTRIBUTION BY SIZE OF VILLAGES UNDER ABORIGINAL, INVADER AND NEWCOMER ADMINISTRATIVE HEADMEN

Tax-payers	Totals			Total	Percentages			Total
	Aborigines*	Invaders	Newcomers†		Aborigines	Invaders	Newcomers	
0–19	6	29	56	91	30·0	21·3	22·0	22·2
20–39	7	49	85	141	35·0	36·0	33·5	34·4
40–59	2	25	57	84	10·0	18·4	22·4	20·5
60–79	3	16	29	48	15·0	11·8	11·4	11·7
80–99	1	1	13	15	5·0	0·7	5·1	3·7
100–119	1	6	4	11	5·0	4·4	1·6	2·7
120–139	—	4	4	8	—	2·9	1·6	2·0
140–159	—	1	1	2	—	0·7	0·4	0·5
160–179	—	1	1	2	—	0·7	0·4	0·5
180–199	—	1	1	2	—	0·7	0·4	0·5
200–249	—	3	—	3	—	2·2	—	0·7
250–300	—	—	3	3	—	—	1·2	0·7
Totals .	20	136	254	410‡	100·0	99·8	100·0	100·1
Mean .	39·0	48·5	45·1	45·9				
S.E. .	8·7	4·2	2·8	2·2				

* Excludes one village whose size was unknown.
† Excludes 3 villages whose sizes were unknown.
‡ The total excludes an additional 10 villages for which full details were not recorded.

Administrative villages of the Aborigines, mostly Nyanja, appear to be rather smaller than those of the Invaders and Newcomers.

2: Mitchell E-5 (1946-1949) 1956 FT7 Yao FT7

TABLE XVII*b*

INITIATION RIGHTS AMONG INVADER AND NEWCOMER HEADMEN WHO HAVE VILLAGES WITH MORE AND LESS THAN 60 TAX-PAYERS
(Arranged to hold the influence of village size fixed)

Type of Headman	Over 60		Under 60		Total
	Init.	No Init.	Init.	No Init.	
Invaders . .	14 (11·8)	9 (7·6)	21 (17·6)	75 (63·0)	119 (100·0)
Newcomers .	27 (10·8)	26 (10·4)	27 (10·8)	170 (68·0)	250 (100·0)
Total . .	41 (11·1)	35 (9·5)	48 (13·0)	245 (66·4)	369 (100·0)

$n = 3$; $\chi^2 = 3{\cdot}96$; $p = 0{\cdot}26667$.

Among all headmen (Table XVII*a*):

19 of 31 headmen who hold both initiation rights have villages with more than 60 tax-payers . . . . . — 61·3%
7 of 16 headmen who hold only the boys' initiation rights have villages with more than 60 tax-payers . . . . . — 43·7%
15 of 42 headmen who hold only the girls' initiation rights have villages of more than 60 tax-payers . . . . . — 35·7%
35 of 280 headmen who hold no initiation rights have villages with more than 60 tax-payers . . . . . — 12·5%

When the influence of village-size is held constant the advantages of Invaders over Newcomers in the competition for initiation rights is discernible, but the differences are so small that they are of doubtful significance (Table XVII*b*).

14 of 23 Invader headmen with villages over 60 tax-payers have initiation rights . . . . . — 60·9%
27 of 53 non-Invader headmen with villages over 60 tax-payers have initiation rights . . . . . — 50·9%
21 of 96 Invader headmen with villages less than 60 tax-payers have initiation rights . . . . . — 21·9%
27 of 197 non-Invader headmen with villages less than 60 tax-payers have initiation rights . . . . . — 13·7%

As we may anticipate, relationship with the chief is an important factor in the competition for initiation rights. Among the chief's direct and clan relatives for example, 36·4 per cent (51 of 140) hold initiation rights, but only 16·8 per cent (39 of

2: Mitchell E-5 (1946-1949) 1956 FT7 Yao FT7

622
643
554
881

TABLE XVIII

INITIATION RIGHTS AMONGST INVADER AND NEWCOMER HEADMEN WHO ARE RELATED AND UNRELATED TO THE CHIEF

Type of Initiation Holder	Invader				Newcomer				Total
	D	C	N	T	D	C	N	T	
Both init. rights .	5	8	4	17	2	3	9	14	31
Boys' init. rights only	2	2	2	6	1	1	8	10	16
Girls' init. rights only	5	5	2	12	5	12	14	31	43
No init. rights . .	26	25	33	84	13	25	160	198	282
Total	38	40	41	119	21	41	191	253	372
% Init. holders .	31·6	40·0	24·2	29·4	38·1	39·0	19·4	21·7	24·2

D = Direct relatives; C = Clan relatives; N = Non-relatives; T = Sub-totals.

Combining Invader and Newcomer totals.

$n = 6$; $\chi^2 = 22{\cdot}24$; $p = 0{\cdot}00112$.

232) of his non-relatives hold them [1] (Table XVIII). There is a slightly greater proportion of the clan relatives holding initiation rights than direct kinsmen, but the difference is insignificant.[2] Slightly more of the chief's relatives among the Newcomers hold initiation rights than those among the Invaders,[3] but once again the difference is so small that it might easily have arisen by chance. A much greater proportion of Invaders is related to the chief than of Newcomers,[4] so that among the Invaders the relative advantage of their kinship with the chief, as against the unrelated, is somewhat reduced. There are very many Invaders who can claim kinship with the chief in their struggle for initiation rights. Among the Newcomers, conversely, because there

[1] Diff. of per cent = 19·6; S.E. of diff. = 4·58; C.R. = 4·28; $p = 0{\cdot}00002$.

[2] Direct relatives (20 of 59) = 33·9 per cent; Clan relatives (31 of 81) = 38·2 per cent; Diff. of per cent = 4·3; S.E. of diff. = 8·2; C.R. = 0·52; $p = 0{\cdot}6030$.

[3] Newcomers (24 of 62) = 38·7 per cent; Invaders (27 of 78) = 34·6 per cent; Diff. of per cent = 4·1; S.E. of diff. = 8·2; C.R. = 0·5; $p = 0{\cdot}6170$.

[4] Excluding those entitled to wear the scarlet headband. Invaders (78 of 119) = 65·6 per cent; Newcomers (62 of 253) = 24·5 per cent.

2: Mitchell E-5 (1946-1949) 1956 FT7 Yao FT7

622
643
554
881

are so few of the chief's kinsmen among them, to be related to the chief is a distinct advantage in this struggle.

I recorded the origin of the initiation rights of only 38 of the 55 Newcomer headmen who hold these, excluding those who also have the right to wear the scarlet headband. Table XIX sets out these data. We cannot put too much reliance on these

TABLE XIX

THE ORIGIN OF INITIATION RIGHTS OF SOME NEWCOMER HEADMEN

Type of Initiation Right	Given by Chief of present residential chieftaincy	Brought from elsewhere	Total	% Brought in
Both init. rights . .	8	5	13	38
Boys' init. rights only .	9	0	9	0
Girls' init. rights only .	15	1	16	6
Total	32	6	38	16

figures because they cover only about three-quarters of the village headmen in this category, and these, moreover, were not randomly selected. As they stand, the figures support my earlier conclusion that Newcomers are more likely to obtain rights for only one initiation ceremony, than for both together. While 38·5 per cent (5 of 13) of the village headmen who hold both initiation ceremonies had brought in their rights with them from outside, only 4·0 per cent (1 of 25) of those who hold only one of the rights had done so.[1] An analysis of the periods when headmen were given their rights reveals consistent results.

From Table XX we see that:

Of 11 Invaders who hold rights to both initiation ceremonies, recent chiefs granted 3 . . . . . = 27·3%
Of 8 Newcomers who hold rights to both initiation ceremonies, recent chiefs granted 2 . . . . . = 25·0%
Of 12 Invaders who hold rights to only one of the initiation ceremonies, recent chiefs granted 3 . . . . . = 25·0%
Of 24 Newcomers who hold rights to only one of the initiation ceremonies, recent chiefs granted 14 . . . . . = 58·3%

[1] Diff. of per cent = 34·5; S.E. of diff. = 12·47; C.R. = 2·77; p = 0·0056.

2: Mitchell E-5 (1946-1949) 1956 FT7 Yao FT7

TABLE XX

WHEN INITIATION RIGHTS WERE GRANTED TO NEWCOMERS AND INVADERS

622
643
554
881

Type of Initiation Right	By early Chiefs		By recent Chiefs*		Total
	Invaders	Newcomers	Invaders	Newcomers	
Both init. . .	8	6	3	2	19
One init. only .	9	10	3	14	36
Total . . .	17	16	6	16	55

* This is obviously a crude classification. I have taken roughly 35 years as the dividing line. As the early chiefs I have classified all the Kawingas before and including Kawinga V who died in 1913; all the Liwondes before and including Liwonde III who died in 1921; all the Ngokwes before and including Ngokwe IV who died in 1905; all the Mpoms before and including Mpoma II who died in 1913; and all the Chikweos before and including Chikweo II who died in 1914.

In other words, recent chiefs have been granting single initiation rights to Invaders in the same proportion as they have been granting both rights, but they have been granting Newcomer headmen the right to hold only one ceremony more often than the right to hold both. Of the six sets of rights to initiation ceremonies granted by recent chiefs to Invader headmen, three were rights to hold only one ceremony, while 14 of the 16 initiation rights granted to Newcomer headmen were for one ceremony only.[1]

622
554
881
795
619

Headmen do not make use of their bonds of common religion or tribe with the chief in their competition for initiation rights. Table XXI sets out the numbers of headmen of different religion. There is a substantially smaller proportion of Pagan headmen (9·7 per cent) holding initiation ceremonies than either Christians (25·5 per cent) or Moslems (24·4 per cent).[2] Most Pagans, however, are also Newcomers so that this difference is actually a reflex of the generally lower rank of Newcomers. Table XXII sets out the number of headmen of the chief's tribe and of other

[1] i.e. 50·0 per cent against 87·5 per cent; diff. of per cent = 37·5; S.E. of diff. = 20·08; C.R. = 1·87; p = 0·0614.

[2] Pagans = 9·7 per cent; Others 24·6 per cent; diff of per cent = 14·9; S.E. of diff. = 7·94; C.R. = 1·88; p = 0·0603.

2: Mitchell E-5 (1946-1949) 1956 FT7 Yao FT7

headmen is higher than among the Aborigines or the New-comers. It also shows quite clearly that the chief's direct relatives hold more of the privileges associated with rank than his clan relatives do, and they in turn hold more than his non-relatives. 622 554

The Political Process as a Struggle of Headmen Against the Chief

Modern chiefdoms appear to be organized on essentially the same principles as those described by Duff MacDonald. A chiefdom is headed by a chief and under him his subjects are organized in villages. Each village is represented by a headman, who stands in a relationship to the chief and to other village headmen, according to the prestige of the group he represents. This prestige is determined partly by his historical association with the chief in his past military exploits, partly by the size of his village, and partly by the prestige he has had in other areas. These elements were significant in Yao polity before the advent of the Whites, as we have seen from Duff MacDonald's description. Village headmen then were continually involved in a struggle for power among themselves and against the chief.[1] The struggle for power among village headmen continues to-day though in a changed context. Military power is no longer the object of the competition between them: the struggle for followers has become transmuted into a struggle for tax-payers. In harmony with the new political and economic situation a successful headman is not rewarded by military superiority, but by Government recognition and an official emolument. 643 622 554 178

At the same time, the chief whose power in the pre-White days resided in his armed forces, nowadays draws on the power of the White Administration to exercise his authority over his village headmen. His position is strengthened by Government decree and he does not hesitate to threaten to use it if necessary. Although the prestige of chiefs is higher than that of any of the village headmen, the difference in prestige between any chief and his most important headman is not very great. They are treated with almost the same deference by the minor village headmen and commoners, and they are referred to by the same term (*mwenye* = chief). The chief or an important village headman

[1] See Chap. II, p. 34.

2: Mitchell E-5 (1946-1949) 1956 FT7 Yao FT7

The chief or an important village headman

[60] is usually addressed by a kinship term, either *baba* (father) or
643 *ambuje* (master or grandparent). When he is referred to, his
622 name is not used. Village headmen are owners or wardens of
554 villages (*asyene misi*) but only those headmen of some standing
178 are referred to as *mwenye*.

Important village headmen, like the chief, are in mystical
643 danger from pollution by death. They cannot come to the hut in
622 which a corpse is lying; and they cannot eat the chicken which
554 has been brought to them by relatives of the deceased to announce
761 the death. Like the chief too, an important headman may be buried in a tomb in his village and not in the graveyard.

But an important element in their relationship nowadays is
643 that the Administration will support the chief against a village
622 headman when it comes to a trial of strength, and that a headman
554 these days is precluded by modern conditions from setting up
578 chiefdoms as he did in the old days. Village headmen therefore
691 must struggle for power against their fellows and the chief within the modern Administrative framework. Some attempts are made to resist the power of the chief but these are rarely successful. The dispute between Liwonde and Ndenda illustrates this.

Ndenda was an Nguru headman, who in 1947 had 284 tax-payers under him (Liwonde, the chief, had 186 in his village). Ndenda had come into Liwonde's area before the White invasion and had surrendered with his relative Mlelemba, to Liwonde. The second Liwonde had given him both initiation rights but, unlike his relative, he did not have the right to wear a scarlet headband.

In 1938 or thereabouts, Liwonde decided to move his village site from the Shire River to its present site about half-way up the Great Rift scarp. He sent two of his young men to look for a suitable site, and to plant some mango trees there when they had found one. Ndenda heard of this and sent one of his men to take Liwonde's men into custody. He took their hoes away and then told them to go back to tell the chief they were planting in his (Ndenda's) land. In due course Liwonde moved up to his new site, and asked Ndenda why he had taken the hoes away and whether he owned the country, i.e. was the chief. Ndenda now argued that Mlelemba's ancestors had been given the rights of chieftainship over this area and that the first Mlelemba in the area had given Liwonde some elephant tusks for these rights. Liwonde replied that the chief has a right to tusks and that many had given tusks to him but were not entitled for that reason to rights of chieftainship. Liwonde handled this situation by calling a meeting of the village headmen in the area. They assembled

2: Mitchell E-5 (1946-1949) 1956 FT7 Yao FT7

and the claims of Ndenda were debated. The headmen supported Liwonde in his claim that the tusks were part of the chief's rights and that when Mlelemba had come he had come 'to get fire from the chief'. Liwonde then upbraided Ndenda for imagining that because he had so many followers he was a chief, and fined him 10s. for being insolent. 643 622 554 578 691

The struggle between Liwonde and Ndenda did not end however. Some years afterwards a man came to Liwonde and said that he wanted to live in his area. This man was a complete stranger and had no relatives there. Liwonde sent him to Ndenda's village. Later while living in the village, this man stole some cloth. He was arrested and Ndenda brought him to the chief saying that the chief was responsible for him. Liwonde told Ndenda that he was being insolent again and that the responsibility must rest with him because the man had married into his village. He ordered Ndenda to pay £1 to compensate the victims of the theft. This Ndenda did but in his view this was tantamount to being chased out of the chief's area. He therefore moved with his children across the boundary northwards into Jalasi's area, and told his unrelated villagers to follow him. They refused to leave Liwonde's area. He was helpless and could do nothing about it. He returned to Liwonde's area a broken man and died shortly afterwards. His eldest son took charge of the village affairs, but so far no successor has been found.

The struggle between Ndenda and Liwonde has some interesting features about it. The strength of the chief in his Government position is not as evident as it has been in other struggles, as, for example, between Jalasi and Kalonga, or between Chiwalo and Ntimbuka, in the cases I cited earlier.[1] It appears only indirectly. Ndenda did not appeal to the District Commissioner against the fine as he might have done if he had felt his position to be more secure. The case history also shows how Liwonde ranged his other important headmen, 47 per cent of whom were kinsmen or co-Invaders, around him against Ndenda who was neither. It shows also that Ndenda's reaction to what he felt to be an injustice, typically enough, was to emigrate and to try to injure the chief by reducing his followers. When this failed he was defeated and it was his downfall, for, like a chief, 'a headman without people is nothing'.[2] 643 622 554 578

[1] Pp. 86 and 96.

[2] *Mcilambo naga nagamakola Ωandu ngawa mcilambo*: 'A chief who has no people is not a chief'—a saying frequently quoted to emphasize the dependence of the chief on his subjects.

2: Mitchell E-5 (1946-1949) 1956 FT7 Yao FT7

The Rôle of the Chief in Headman's Installation Ceremonies

The second significant aspect is the importance of the chief in the installation ceremony. In each ceremony the chief has to give his formal consent to the succession. Note that the chief is approached by one of the headman's relatives, so that at this level, in spite of Kawinga's statement,[1] the succession dispute is over and the heir is decided upon. The chief's formal consent, his formal fixing of the date of installation, his personal appearance or the appearance of his representative, and his giving of the gift, all serve to set his official seal on the installation and to recognize its political significance. 643 622

The chief recognizes the leader of the group, both in his actions and his words. He also sees in the headman his representative, as when Nyambi said, 'When you disobey the headman you disobey me,' or when Kawinga said, 'Nyenje, you are responsible to report to me any unusual thing which occurs in your village here.'

When a chief comes into a village it is the village headman who entertains him. I was told that if the headman or his representative were away, the chief would be given no hospitality at all, because the villagers only entertain him through their representative, the village headman. Though the chief himself may not frequently visit villages, his representatives are constantly coming and going on his errands. Where affairs of day-to-day administration of the chiefdom are concerned these representatives are usually the court messengers, who may be paid from Native Authority funds or from the chief's private funds. The chief's representative in his tribal capacity, however, is usually his *nduna*, but it may be practically any village headman whom the chief selects. For example, he may send his *nduna* or one of his satellites as his representative to a *mapeto*.[2] He sometimes sends his representative as a referee to divinations and to chicken poison-ordeals following accusations [574] [644]

[1] Kawinga had a say in Nyenje's succession because he was a clan-relative. I have evidence that some lobbying had been going on because the successor that Kawinga chose was not chosen by Kawinga's relatives.

[2] A meeting held shortly after a funeral to decide whether death has been caused by sorcery or is due to natural causes.

2: Mitchell E-5 (1946-1949) 1956 FT7 Yao FT7

643 of sorcery, but the representative takes no part in the proceedings
622 at all; he is outside them and is there merely to see that affairs are conducted fairly.

The Value Attached to the United Village

622 The third aspect, the dominant theme in all speeches, is
621 the emphasis on the position of the headman as a leader of a corporate group, and his duty to maintain its unity. The chief and the officiating headmen warn the successor about the possibility of conflict in the village. They advise him to settle differences at once lest these should lead to a split in the village.
[591] They also warn him that his wife's relationships with her sisters-in-law, living as she is, virilocally,[1] are a danger point and may lead to trouble. The danger from the 'husbands' who are members of other villages and whose loyalties do not lie directly with the new headman is made manifest to him. At Nyenje's ceremony the officiating headman remonstrated with Nyenje's sisters because some had left the village without giving him an opportunity to settle their differences. The frequent references to the danger of sorcery are also references to the fear of the breakdown of the village. The villagers are exhorted to respect the headman and to be obedient to him for the general welfare of the group as a whole. Regularly the image of the tree and its branches is invoked, and it is made clear that the headman is dependent on his people for his rank and status, and they on him for their unity.

The disintegration of a village in Yao eyes is a sad affair and
621 the disruptive forces in it must be very strong before a section
166 leaves it. People who want to leave a village are usually remon-
627 strated with and told not to 'break' it. In the frequent conflicts between the headmen and their younger brothers the arbitrators usually try their utmost to prevent a migration. They always award compensation to the injured party and tell the disputants to live in peace, and not to leave the village. Frequently, however, the leader of the dissident group prefers to refuse the compensation money, which is often as much as £6 or £7, and

[1] i.e. living with her husband's kin. I use 'virilocal' and 'uxorilocal' in preference to the older but ambiguous terms 'patrilocal' and 'matrilocal'. See Richards, 'Some Types of Family Structure amongst the Central Bantu', 208–9.

622 the children of Ncilaga (C5) and Bt. Mkwinda (C6). There
613 was a big difference in the ages of these two women. Ncilaga
561 died nearly 30 years ago but Bt. Mkwinda died in 1948. When Cikoja V (C1) died in 1936, Salimu II (D3), who was born in about 1914, was very much younger than the present Cikoja VI (E7), who was born about 1895. Ncilaga (C5) had no sons, nor had Atabiya (D1), her eldest daughter, so the succession passed to the only son of Amaliama (D2) who was the senior male in that generation. Salimu II, genealogically senior to the present Cikoja, is to be the next headman. He has married a 'cross-cousin' (his mother's mother's brother's daughter's daughter's daughter) and lives in the village. He has already taken over the affairs in one section of the village. The other section has moved out and built about half a mile away with the present Cikoja VI. Note that the junior house—i.e. the descendants of Citeleka (A2)—are completely out of the succession. Wegami's (E1) eldest son, Cilimba (F1), is living virilocally with Cikoja VI in his section of the village and is already opposed to the prospective village headman Salimu. He is likely to be the village headman after Salimu dies and may even push his claim when the present Cikoja VI dies, because Salimu has been accused of sorcery on several occasions.

622 The conflict between sister's sons and mother's brothers at
578 successions has all but fallen away. The people oppose with
604 some vigour the idea that a younger brother should succeed. Frequently the chief or headman would rather his younger brother succeed, and sometimes indicates him as his successor. Kawinga, for example, has given his pre-succession name of Mlomba to his younger brother and many say this is tantamount to announcing Mlomba as the next Kawinga. This is violently repudiated by most people I have spoken to and they indicate a sister's son as the likely successor. Jalasi too, before he died in 1941, indicated Mbawa, his mother's younger sister's son as the successor, but when it came to the point a sister's son succeeded. The weight of custom is in favour of the sister's sons and usually the succession is fought out among uterine or collateral brothers in the first descending generation.

643 A matrilineal relative is always chosen to be chief in preference
to any other, but sometimes there is no heir. Other things being
662 equal an unsuitable matrilineal relative will be chosen, or a

2: Mitchell E-5 (1946-1949) 1956 FT7 Yao FT7

woman will take the position, before the name will be allowed to pass to a non-matrilineal relative. While a matrilineal relative holds it there is always the chance that a suitable matrilineal heir will be born to a woman of the matrilineage, and will be able to take over the name. In Katuli's area the principle of primogeniture is so strong, I was told that rather than let a succession pass to a junior house, a woman is appointed to ' keep the name '. This happened before the succession of the present Katuli. Nkolojele was the present Katuli's mother, and when his mother's brother died Katuli was too young to become the chief. Instead Nkolojele took the name to prevent it from going to a junior lineage and held it from 1920 to 1936. Nkolojele was thus appointed Principal Headman under the 1912 Ordinance. In 1936, she retired in favour of her son who then took the name Katuli and became chief.

The name is kept within the matrilineage if it is at all possible. The history of the succession of Mpumbe's name is instructive in this context.

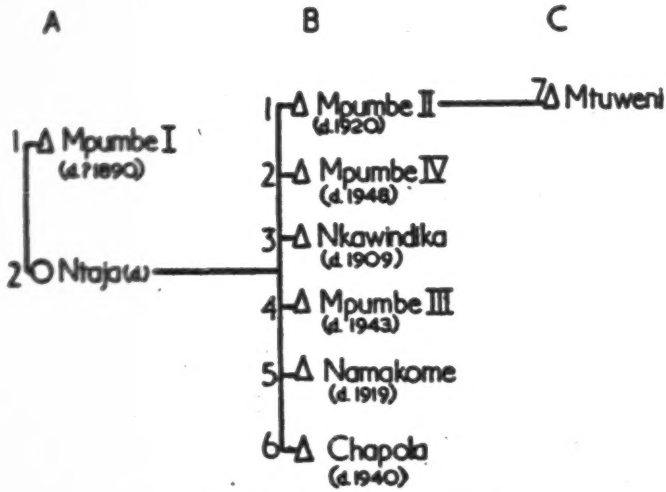

REFERENCE GENEALOGY. MPUMBE VILLAGE.

Mpumbe, it will be remembered,[1] came from Jalasi's area to Kawinga's after the White attack on Jalasi in Mangoche. The genealogical summary sets out the relevant data.

[1] See p. 59.

2: Mitchell E-5 (1946-1949) 1956 FT7 Yao FT7

621 this happens the husbands take their wives to their several villages with them.

Throughout this general process the links between groups of any particular area are constantly changing but the general pattern remains constant. A village expands outwards, and the various patrilaterally-linked groups, and often some of the segments of the dominant lineage, form hamlets separate from each other. The dominance of one of the local headmen over the others is still recognized and the general pattern of primacy is maintained. Some of the earliest villages in the area remain intact through many years. Villages which were small hamlets twenty or thirty years ago, when they had just moved into the area, have become relatively senior. Many headmen who were senior then have moved, or their villages have disintegrated, or ceased to exist. Other villages have moved in and are ranked lower. Thus through time the rank of any one headman may have changed, but the ranking system and the relationships of senior to junior headmen remain unaltered.

621 The general process is the same for the whole chiefdom,
622 though there is less overall structural change than in smaller
631 areas. The more important a village headman, the less likely is his village to disappear entirely. The most important village headmen, therefore, have long histories of association with the chief. Thus while there is considerable change going on at the lowest levels of the social system, the social structure of the whole chiefdom is remarkably stable. In other words, the rate of change taking place within the structure varies directly with the level of organization within that structure. The names of the *nduna* of Kawinga, Liwonde and Malemia are the same as those of the *nduna* who accompanied these chiefs into Nyasaland in the middle of the nineteenth century. Relatively few of them have disappeared. And so it is with important village headmen. The links between them, fixed by their rank and status relative to each other in perpetual kinship and other ties, form the political structure of the chiefdoms. From chiefdom to chiefdom the same pattern of organization is concealed behind an apparent diversity of actual links.

178 But, as a result of their contact with other peoples and their
622 absorption into the economic and administrative framework of
643 the British Empire, new social relationships are developing

2: Mitchell E-5 (1946-1949) 1956 FT7 Yao FT7

amongst the Yao. The religious sanctions behind tribal initiation ceremonies were weakened when many of the village headmen adopted Islam, and the rights of holding the Islamic equivalents fell to commoners who were leading Moslems. Thus for many village headmen the significance of the holding of initiation rights fell away. The White Administration has introduced new political personalities into the field, such as the court clerk, the court sergeant and other members of the chief's bureaucracy. These persons have been able to acquire peculiar positions of power in competition with the chief's traditional advisers.[1] Some wealthy individuals are able to wear better clothes, build better houses, and have more personal attendants, than the chiefs. For example, there is a carpenter in Kawinga's area living near an Indian store,[2] who is wheeled about in a garetta (ricksha) as the chiefs are, and who dresses far better than any of the chiefs.

But these changes have not yet affected the pattern of social relationships appreciably. Up to the present as new elements were introduced into Yao social structure they have been absorbed in terms of the traditional structure. The traditional chiefs, therefore, became the Principal Headmen when White Administration was imposed on them. Village headmen, no longer able to compete with each other in terms of followers and slaves, now began to vie with each other for 'books'. Important village headmen became the Moslem leaders, and the larger mosques were built at their villages. The chiefs, by virtue of their annuity from the Government, are able to maintain a higher standard of living than most of their subjects: they build burnt-brick houses, they wear finer clothes, they are wheeled about in garettas or, latterly, are pillion passengers on bicycles pedalled by retainers. By using their annuities as capital, they have been able to grow more tobacco than most of their subjects and so still maintain economic ascendancy over them.

So that until 1949, at least, in spite of the introduction of

[1] cf. my 'The Political Organization of the Yao of Southern Nyasaland'.

[2] He does not live in a village as most people do; he is an Nguru, and has none of his relatives near him, which is significant. His relationships with his clients are formal and transitory and he is not bound by traditional kinship ties. He therefore attempts to achieve prestige through conspicuous expenditure.

2: Mitchell E-5 (1946-1949) 1956 FT7 Yao FT7

178 new personalities into Yao society, the social structure remained
622 little altered. There were not enough Government officials, or
643 officials in the chief's bureaucracy, or rich individuals in Yao-
land to be able to represent significant elements in the social structure. In the years 1946–49 Yao social structure was still organized in terms of ranked lineage segments at one level, ranked matrilineal groups at a second, and ranked villages at a third.

3: Stannus D-5 (ca. 1912) 1922 FT7 Yao FT7

generous and popular, the donations may mount up to a useful sum. Dancing goes on late into the afternoon when all return to the village. 843

The man may not speak to his guardian again until after the birth of the child. The two women guardians, the *nkomwesi* and the *nahenga*, as a rule cease sexual intercourse with their husbands during the same period or, at all events, during the last month before the birth of the child.

The child born of a woman who has not gone through *Lihiwe* is buried alive. [847]

Chieftainship. The Yao when they migrated to their present country were headed by a number of their chiefs. These eventually settled in different areas adjacent to one another, each ruling over a considerable tract of country. The chief was supported by a number of headmen, each of whom looked after a village; the chiefs and headmen in turn being assisted by the village elders. 622 643

Often among a chief's counselors one found a number of his relatives, and sons and brothers were often made headmen. A man assuming chieftainship often had to dispose of a brother of whom he was afraid. 643

Chieftainship is hereditary, the chief's name being passed on to each successor. Succession is to eldest son of the eldest sister or a son of some other sister. Failing these, it passes to a grand-nephew. If there is no acceptable adult nephew, a full brother may succeed.

Macdonald's account of the Malemya's succession[1] is, I believe, incorrect. The old Malemya (Nalutumbo) was succeeded according to custom by his nephew, Kasabola who, as Malemya, was called Ndalama. Kumtaja was not a younger brother of Nalutumbo or Kasabola, but a cousin of the latter. Ndalama was succeeded by a nephew, not the eldest but the second son of a sister, the eldest having already succeeded to the chieftainship of Kumtaja was therefore ineligible. The present Malemya will be succeeded by a grand-nephew, the son of a daughter of his eldest sister, his sister having no sons. [114]

A successor inherited all the wives and slaves of the deceased chief and all his goods and chattels, guns, ivory and gardens. Any small possessions might be divided among the deceased's children and in the case of guns, those who had always used them often laid claims not to be separated from their weapons; these claims were often allowed by the new chief. 643 428

In the same way, any ordinary man's successor is his nephew, the son of a sister, who inherits all goods and chattels and slave wives, but not free-born wives, nor gardens, which go to the free wives. Stock is generally divided among the children.

Before 1891, when a British Protectorate was formally declared over Nyasaland, each chief ruled supreme. He was consulted as to the dates for *Unyago;* he directed the harvesting, etc.; he proclaimed war and generally was paramount among his people. It will be seen, therefore, that he was a busy man, but he received no direct remuneration. His wealth consisted of slaves and ivory. Slaves he obtained in warfare and as blood money, 643 [556]

[1] Op. cit., vol. 1, p. 100.

3: Stannus D-5 (ca. 1912) 1922 FT7 Yao FT7

643 ivory by his own hunting parties or as a kind of tithe on other hunting expeditions. The ground tusk, i.e. the tusk on the side on which the elephant falls when killed, was the chief's share. In the same way, the hind leg on the ground side of any game animal killed was sent to the chief. He took a share of the spoils of war and most of his people yearly gave him either service in building houses, etc., or kind in the form of food-stuffs, but he enforced no service and levied no tax, except for the making of a new burial place.[1] New settlers in his village were expected to invite him to drink beer made with their first crops.

In return, he always provided cloth to invest the body of the dead. He also made presents at the time of *Unyago*.[2]

A chief's life, therefore, may not be "all beer and skittles," though he consumes a good deal of the former and a kind of skittles[3] was a favorite pastime of one of the Malemyas. A saying embodying this idea was used when pleading for a man who had [538] committed adultery with his chief's wife "one who carries a tortoise (on a string over his back) is likely to get his clothes soiled"; a man has to put up with the troubles his belongings bring him. So a chief must bear with his own people who do wrong.

643 Ample opportunity for exercising such forbearance was provided, since the chief was 692 formerly the adjudicator of all disputes and dispenser of justice in all crimes. The headman did the same in a smaller way but appeal could always be made to the chief. Cases were heard by the chief sitting in council. He and his headmen and elders would assemble in the village open space and here cases were stated, often at great length.

Each party to the case would employ some man well known for his powers of oratory as leading counsel. The speaker for the plaintiff would start proceedings by a recital of all the evidence he could collect. After him would follow innumerable speakers, whether actual witnesses or not, each telling as good a story as he could, and the defendant's case would then be put by his representatives. There was no cross-examination but at the end, a summary was made and judgment given. A chief often took the advice of some one of his old men whom he trusted.[4] The chief received no payment for his services, except in the case of murder; neither did the "counsel" receive anything for their efforts.

674 Crimes. Causing the death of a person by witch medicine, *usaui*, was the most heinous [754] crime; a *usaui* ordeal might be held, but if the offense was proved, burning was the punishment which usually followed.

[684] The offense second in gravity was adultery. This might be expiated by payment or by death, according to the circumstances under which it occurred; mutilation was often [696] performed in the case of a chief's wife. All death sentences with the exception of those

[1] Vide supra, p. 264. [2] Vide supra, pp. 248, 264. [3] Vide infra, p. 380.

[4] The old Malemya (Nahitumbu) has some very fine men among his counselors. Kumtupa and Chiupila, the latter renowned for his oratory, were his chief advisers in legal matters. Ndakika, a slave, was his mentor in all personal and family affairs, while Chokamango was in charge of all ceremonies and served with his assistant, Mpanje, as high priest on all occasions of importance. Others acted as his emissaries, such as Mkapiti who always went on any missions to the Angoni, among whom he was known as Ndunjira.

567 Slavery. Slaves were acquired by capture or purchase, or were received as payment. Prisoners taken by the vassals of one chief in a fight with the partisans of another chief became slaves. Slave raids were also made by the Wayao upon the weaker Anyanja or again expeditions were sent out hundreds of miles away into the Chipeta country to buy slaves.

[422] Slaves were a man's goods and chattels, to do with mainly as he pleased, but no man might kill a slave without bringing the case before his chief and obtaining consent. While some were bought and sold and sometimes found their way into a slave caravan bound for the coast, many, perhaps the majority, lived the life of ordinary individuals in the villages. A man who was unhappy in a village and wished to escape from his vassaldom might run away to another village and there commit some act so that he might be claimed as a slave. The custom was to go to the village and sit by the site of a house which had been pulled down after the death of the occupant, and the saying is, "He has been called by the dead man's spirit."

[554] Many a slave has become an important man in the village and slaves were often the trusted advisers of their chiefs, but there was no means of becoming a freeman. Neither a slave himself nor a second party could purchase his freedom. A slave capturing another man in warfare, for instance, could not ask for his own freedom in exchange for his captive, but anyone so taken became, in a way, the slave of a slave, and the master could not sell the second slave without the permission of the slave captor. An old slave might often be allowed to do just as he pleased and to all intents and purposes was a free man, but he was never actually freed. A slave might earn a return for work done for others than his master; part of this he would probably give to his master, but there was no regular tax upon such earnings.

The idea in accumulating slaves seems to have been to increase the population of the villages and hence their power and progeny. This is borne out by the fact that marriage [582] between free men and slaves was allowed. Marriage between a free man and a slave woman was unaccompanied by any ceremony and was therefore rather in the nature of recognised concubinage. Such a wife, if unsatisfactory, could be sold out of the village, but generally she was well treated. The children of two slaves were of course born into slavery; the children of a slave woman by a freeman husband, were not quite emancipated, as the father could not remove the child from the village of the slave mother's master, and in very extreme cases, it might be sold by him.

Women might marry slave husbands and often a master married his daughters to his slave men whom he thought well of. This amounted to a guarantee to the slave that he [421] would never be parted with. A woman with a slave husband could not leave him informally; she could not sell him, inasmuch as women have no property.

● 613 423 Land Ownership. The ownership of all land was vested in the chief, but he appeared to hold it in surety for all the people over which he ruled. Headmen had no land rights.

[P. 142 A]

II. THE POLITICAL STRUCTURE
Before the whites came

173
643
167

It is difficult to picture what the political organization of the Yao was like before the Whites came into the area, but informants—especially the old men—do describe the conditions that existed in the early days, and in addition to this, there are some useful reports in Duff Macdonald's book[1] which was written before European influence was strongly felt.

Informants describe the movements of the Yao into Nyasaland in terms of small family groups under the leadership of a male matrilineal relative.[2] These leaders bear the same names as certain of the village headmen to-day, and the present village headmen claim to be their matrilineal descendants. Among the kin-group leaders were such outstanding personalities as Kawinga, Liwonde and Nkata.[3] These men were military and commercial leaders and much of their prestige derived from their prowess in trade and war, pursuits which in those days were intimately interdependent. People nowadays describe the chiefs as possessing many slaves, guns and gunpowder and having great "strength". In the history of the chiefs Nkata, Liwonde and Kawinga the pattern of conquest is similar. A group of village headmen under each chief moved into Nyasaland to settle either by treaty as Nkata who settled with a clan-relative among the indigenous Nyanja, or by direct conquest as Kawinga. After settling down they started sending out forces to subdue local chiefs until the boundary of the territory of some other powerful chief, usually another Yao, was reached. When this happened a definite territory was agreed upon by the two chiefs. Within this territory the population was increased by immigration from other areas or by slavery. Village headmen moved from a less to a more powerful chief because of the security he offered them. They were said to "seize the leg"

II. The Political Structure
BEFORE THE WHITES CAME

173 643 167 (*kukumula lukongolo*), i.e. to surrender to the chief in the area. Also the chief sent out expeditions to capture slaves or he purchased slaves with the cloth and beads he had exchanged for ivory at the East coast.

643 421 Within his territory certain privileges and rights were held by the chief and he had certain religious duties to perform in which the unity of the people in the territory was expressed. In general the chief had rights over any ivory either found or hunted in his territory. If a dead elephant were found the tusks belonged to the chief, though he usually rewarded the finder with cloth. [224] If a man killed an elephant the tusk that lay on the ground belonged to the chief while the other belonged to the killer. The killer's tusk was in- [439] cluded in the chief's caravan to the coast and its value paid in cloth to the killer when the caravan returned.

643 657 The chief was also entitled to an annual tribute of food and beer from all villages in his area, but this was used to entertain visitors who came to the court-village.

643 782 The chief's religious duties lay mainly in propitiating the spirits of his ancestors on occasions when the community at large, in contrast to the chief's own private affairs, was either threatened or directly affected. The most obvious occasion was immediately before the rains came when flour was poured on the tree shrine and the spirits of the ancestors asked for good rains. Later when the rains were over a similar sacrifice was made asking for a good harvest. Sacrifices to the ancestors were also made on two other public occasions. They were made when some calamity had occurred or was believed to be impending. A run of unsuccessful campaigns induced Cingwalugwalu, a son of the Yao chief Mponda near Fort Johnston, to ask his father's father's brother to make secri-

8:Mitchell E-5 (1946-1947) 1949 FT7 Yao FT7

[P. 142C]

[1] Dora MacDermott, *Africans or the Heart of Southern Africa*, (London: 1892).

[2] The matrilineal male leader is called *nyamu ndondo* (*nyamu* of the security group) the village headman *nyamu mwai* (*nyamu* of the village) and the chief *nyamu ndondo* (*nyamu* of the land). The word *nyamu* could be translated as totem but see note p. 146. Important headmen and chiefs are both referred to by the term *mwanyi*.

[3] The honorific Ci is dropped from all Yao proper names mentioned in this paper.

173
643
[93]

?

643 782 fice to the ancestors. The other public occasion was at initiation ceremonies. A successful initiation, i.e. one in which the initiates were not beset by misfortune, depended upon the goodwill of the ancestors of the chief. Initiates therefore gathered at the chief's court-village before the initiation, when the sanction of the spirits was asked and the initiates severally blessed. After this they scattered to the bush-schools near their villages only to return when initiation was completed and the chief received them into tribal society.

643 769 The people who had submitted themselves, willingly or unwillingly, to the rule of a chief, in turn expected certain services from him. He provided them, as we saw, with mystical protection through his ancestors. On a more pragmatic plane he was able to arm and co-ordinate military forces thereby giving his people protection from attack. Within his area of rule he was a common person of final appeal in the regulation of relationships of his subjects.

In these various ways, by propitiating his ancestor's spirits on behalf of his subjects, by settling differences between subjects, by co-ordinating defence and in fact by being a unique personality in the area, the chief became the symbol of unity of his tribal group. The symbolism was clearly noticeable on the death of a chief when a short period of social disorganisation called *cipinde* followed. The members of the chief's village were allowed to pillage and to commit rape and other criminal acts without suffering legal action. The demise of the symbol of unity was followed by a period of disunity before the appointment of successor restored the status quo.

622 [769] At the same time much of what has been said about the chief was true also of important village headmen. Village headmen also made sacrifices to their ancestors but only in domestic or village affairs. They too built up their prestige by slaving. Many villages in Southern Nyasaland to-day

622 are composed of the descendants of slave-wives
of village headmen in days past. Like the village
643 headmen the chief was considered to be in danger
622 from contact with death. He could not attend
761 the funeral of commoners, he could not eat the
chicken which was brought to him at the announce-
ment of the death of a commoner (for a village
[753] headmen) or subject (of a chief). Should he do so
he would suffer from a disease called *ndaka*. Also
village headmen, like the chief were supposed to be
well versed in medicine and were regarded with
some awe on this account. The chief and the
village headmen were distinguished from the
commoners in these ways.

643 But, the chief himself was a village headman.
622 He had to administer the affairs of his family
692 group and slaves as had other village headmen.
He was involved in the struggle for power going
on around him because he was not lifted above
these secular struggles as was, for example,
the Zulu King.[1] Duff MacDonald records for
example: "In a dispute between the inhabitants
of different villages, the respective headmen
represent their own subjects, and the chief is
appealed to. All his decisions are final. Still
the chief may otherwise have less influence
than a powerful headman, and we have known
cases where he simply contented himself with
grumbling when his headman acted contrary
to his desire; and in many criminal trials he is
eclipsed by the sorcerers and pounders of poison."[2]

643 Again MacDonald records how the chief tried
622 to entice subjects away from a village headman
at a trial by pointing out that the village headman
had a poor character and was unsuitable to look
after people.[3] While there seems to have been
some evidence that a number of village headmen
under a chief acted jointly in the face of a common
danger, but apparently with no powerful mili-
tary organization. Village headmen seem to have
been almost entirely autonomous in their actions,
slave-raiding on their own, even raiding villages
who paid tribute to the same chief as they did.

8:Mitchell E-5 (1946-1947) 1949 FT7 Yao FT7
[P.143C]

643
622

[1] See Max Gluckman, "The Kingdom of the Zulu of South Africa" in M. Fortes and E. E. Evans-Pritchard ed., *African Political Systems*, (London: Oxford University Press, 1940), p. 25 et seq. The Zulu king had no immediate subjects but commanded the military regiments about him so that he could use these to destroy his rivals.

[2] Dove MacDonald (1902), Vol. I, p. 111.

643 There is little doubt that village headmen did
622 wax in power and finally break away to form the
578 nucleus of a chiefdom of their own. The chief that a headman had left could do little to regain his lost subject and he had to rule not by tyranny but by tact. Duff MacDonald, for instance, records: "When a quarrel arises between the chief of the country and an important headman the latter may rebel and found a new kingdom, thus depriving the old chief perhaps of one-third of the villages in his dominion".[1] Nkanda is an example. "Nkanda of Chersulo was at first a headmen of Kumpama's but rebelled and lives on the Southern side of that mountain an easy day's march from Blantyre."[2]

643 The leader was known, and is still known to-day, by the term *anyene cilambo*. This might be translated as "owner of the country" but the term "owner" in this context would be a mistranslation. I prefer to translate this phrase as: "The person with whom a certain area is identified".[3] Hence when a man says, as the Yao do: "I come from Kawinga's", he does not mean that the land is owned by Kawinga, but that Kawinga is the most important man in that area.

645 Among the village headmen in the area under a
631 particular leader there were a number of trusted
692 village headmen called *ndunu*, which term I
622 have translated as "councillors". These councillors had special duties to perform. They were in the nature of governors in outer areas and each had a number of other villages under his jurisdiction. By this I mean that these villages were supposed to take certain cases for trial to him and to approach the leader through him. The councillors were supposed to visit the village of the chief each morning and to report anything untoward. The councillors also had the important duty of advising the chief, particularly in connexion with raiding of neighbouring tribes. Councillors also arbitrated in the domestic affairs of the chief and in the all too frequent conflicts between the Chief, his sister's sons and his younger brothers.

8:Mitchell E-5 (1966-1967) 1949
[P144B] FT? Yao FT?

008 chief, his sister's sons and his younger brothers.

693 Besides the councillors, there were a number of officials known as **mapungu** (sing. *lipungu*), which term I translate as court assessor. These officials have often been confused with the councillors, though they were a completely different set of officials. They were not necessarily village headmen though councillors were always so. Also the position of the court assessors, unlike that of the councillors, was not hereditary. Court assessors were chosen because of their wisdom and debating ability and often slaves were appointed. Councillors were chosen because of their general status in the community and once chosen tended to be succeeded by the heir, who for all intents and purposes, socially replaced his predecessor. The court assessors lived at the court of the chief and they were the correct channel of approach to him. No one could approach the chief without at first approaching a court assessor and reporting his business. The assessor's more important duty, however, was the sifting of evidence in cases in which the chief was arbitrating. The court assessor then recounted this evidence to the chief who delivered his opinion and awarded compensation.

643 554 In general the picture that we have of the political organization of the Yao before the Whites came, is that of a number of leaders of kinship groups, who by acquiring sufficient dependants and slaves were able to maintain a certain level of power. Certain groups of them were under the power of more influential leaders (the chiefs) who usually had sufficient resources to send trading caravans down to the coast, which in turn maintained his power over his neighbours. In this loose political organization the importance of being able to control dependants was cardinal and the adage "a chief without people is nothing" (**mcilambo nage ngwanakola ilunda, ngwanna mcilambo!**) sums up the situation pithily.

8:Mitchell E-5 (1946-1947) 1949 FT7 Yao FT7
[P.144C]

[1] Dow MacDonald (1882), Vol. I, p. 157. [2] Dow MacDonald (1882), Vol. I, p. 32.
[3] Cf. G. Wagner, "The Political Organization of the Bantu of Kavirondo" in M. Fortes and E. E. Evans-Pritchard ed., *African Political System*, at p. 216: "The Luganda term *omwami* refers both to 'ownership' of objects and of persons. It differs, of course, from our concept of ownership in several respects. Thus the *omwami* (owner) of a person is the one who has not only the foremost rights over him but also the foremost obligations towards him."

413
622

8:Mitchell E-5 (1946-1947) 1949
[P.1458] FT7 Yao FT7

III. The Entry OF THE WHITES

175 British started actively to pacify the country, the
648 sons of Mponda were at war with each other and Cingwalungwalu was on the way to dominating the whole of the west of the Shire River bank above the Murchison falls. After the British had demonstrated their efficiency by a few attacks on some of Nkata's forces, Kalembo approached the British leader and complained of the war in his territory. The British forces accordingly attacked and destroyed Cingwalungwalu's forces thereby leaving the way open for Kalembo to establish himself under the British wing as an important chief of the west bank of Lake Malombe. Amongst the chieftancies studied in this paper there appeared to have been no direct use of the British military forces in internal politics.[1] The Whites in this way immediately became a factor in tribal political organization. First of all some chiefs endeavoured to use the military force of the Whites directly in their tribal politics. Later on as military actions came to an end the power of the Whites continued to be tapped by chiefs and other personalities in the political structure in order to manipulate the tribal political set-up to their own advantage. In the main the power of the British Administration though still an active agent in tribal politics is now present as an abstract and invisible but nonetheless potent force. How this is done to-day I hope to be able to show by an analysis of the interaction of chiefs, African civil servants and village headmen.

101 As a foundation to this view of Yao politics,
175 the detailed history of the three chieftains Ka-
619 winga, Liwonde and Nyambi is illuminating.
643 Kawinga, Liwonde and Nyambi all belong to the same division of the Yao tribe, i.e. Macinga. There are about nine such divisions but only four are to be found in Nyasaland. The Acisi live near the Portuguese East African border in the Fort Johnston area (Katuli's area) and the

101 Amasininga in the Makanjila area of Fort Johns-
619 ton District, i.e. to the east of the south end of
the Lake near Fort Maguire. These two divisions
175 are insignificant when compared with the other
two divisions in Nyasaland. The third division
643 is the Mangoce Yao now settled around Blantyre,
while the last division, the Macinga, are settled
between Fort Johnston district and Zomba.
These divisions arose from a breaking up of the
Yao tribe which originally occupied the territory
between the Rovuma and Lujenda Rivers in what
is now Portuguese East Africa. These divisions
are not very significant to-day. Members of a
division recognize that they are more closely
related to each other than to the members of
another division, but this does not appear to
affect modern political life in any way.

619 The first Kawinga, Liwonde and Nkata[1]
175 all belonged to the Macinga division which had
settled near the tip of Lake Amaramba where it
551 empties into the Lujenda River. From this place
643 of origin, the groups associated with these early
leaders moved into Nyasaland. In addition to
belonging to the same division of the Yao tribe
the three leaders mentioned also had the same clan-
name, viz. *ambewe*.[2] The term that I have trans-
lated as clan-name is the Yao word *lukoryo*,
which may also be translated as "kind" or "sort".
Thus, if one asks a man the "kind" or "sort"
of Yao he is, his answer may refer to the major
divisions as above, i.e. Macinga or Mangoce
or it may refer to the clan-name. Clan-names are
inherited matrilineally, but holders of the same
name are unable to trace their descent from
a common ancestor. People with the same clan-
[582] names formerly did not marry but this prohibi-
tion has fallen away. For the commoners the
clan-name seems to have lost most of its signi-
ficance but it is carefully remembered in the royal
lines and lines in which the rank of a village head-
man is passed down.

643 The present Kawinga and the present Liwonde
551 can trace their descent matrilineally from a com-
175

643 mon ancestress. The first Kawinga and the first
551 Liwonde were maternal brothers and to this day
175 Kawinga and Liwonde call each other "brother".
[601] Nyambi however was a sister's son of an early leader Mkumba who was the father of Nkata, and their clan-name was *amilasi*. Nkata therefore called Nyambi "father".[3] Nkata was the first to move into Nyasaland and Mkumba and Nyambi followed afterwards. Later the Nkata name was dropped and an Arabic name Zarafi, corrupted to Jalasi, was substituted. Hence the present Jalasi calls the present Nyambi "father". Kawinga and Liwonde both call Nyambi *alassa*, or brother-in-law, it is said because one of the early Nyambi's married a woman who bore the clan-name of *ambeze*.

643 The groups under Kawinga and Nkata entered
175 Nyasaland and gradually expanded until Jalasi,
648 as he became known, dominated the area around Mount Mangoce in the present Fort Johnston District, and Kawinga, safely ensconced on Mount Cikala, dominated most of the area north of this point. Jalasi, Kawinga and Liwonde were heavily defeated by British forces in 1895–6 and driven out of British Territory. Later on they were allowed to return after they had been ordered to surrender and effectively disarmed. When they had returned, the chiefs were virtually ignored and as far as can be ascertained the effect of the British government was to destroy the power of the chiefs and substitute the system of British administration for theirs. Nevertheless, it is apparent from entries in the District Book that even though it were not the official policy, the administrating officers considered it important that the chiefs should maintain some power. Thus when Kawinga III died in August 1905 the District Book records: "There were two claimants to the succession, Kumlomba and Chiwalo. Their claims were really very equal and H. M. Commissioner (April 1906) called in Kumlomba and the most important headmen and decided the succession by their vote." The

[P. 146C]

643
551

[1] The Nyambi chieftancy developed from the Nkata line as explained below.

[2] The clan names of the Yao unlike those of most other Central African tribes, appear not to refer to common objects of everyday life. I could not get a translation of *ambeuw* and of most other clan-names.

[601] [3] A man calls his father's sister's son *ainsuwi* (cross-cousin) but since this cross-cousin should in due course succeed to the (man's) father's name, he may also call his cross-cousin "father".

643 report goes on to say that the newly elected chief
175 Kumlomba "had been mad once and still has a weak looking face and is a weak man. He has
648 no real influence with his people and is ruled by his young men's advice. He means well but does not act on his own ideas sufficiently."[1] This comment shows that even though the Administration may have acted on this occasion for the preservation of peace, to the Yao it seemed to be approving their indigenous institution in appointing the successor. Informants say that when Kawinga IV died in 1913 his successor Chiwalo, who was the unsuccessful claimant of the report in the District Book, was able to succeed to the name against some Yao opposition, because of his influence with the administration.

As early as 1903, only seven years after the last military action was taken against a Yao group, the position of the defeated chiefs in the new political structure was being considered. Thus the Report of the Protectorate 1903–1904 reads: "A somewhat difficult question for consideration is the extent of power which should be allowed to native chiefs. Before British influence was established a chief had unlimited powers of life and death, and was able to keep his people in order. He did so not by kindness, but through fear. At the present day, when chiefs are not allowed to use any of their old methods, the people formerly subject to them often refuse to obey or to take any notice of their directions. The tendency is for the old large communities to be broken up: for the small man to collect a surrounding of friends and go off and build new hamlets in other localities. There are very few chiefs in British Central Africa who are of great assistance to the Magistrate so far as judicial work goes. There are, of course, notable exceptions, but as a rule it is not safe to give any power to native headmen."[2] I feel that the view of chieftainship expressed in this report is erroneous and that the chief was never as powerful over all his subjects as the 1903 administration assumed. Also the break-up of large communities,

643 I feel, was not due to a break-up of the chief's
175 power but rather to a breakdown of domestic
648 slavery and the system of sanctions that lay behind it, thereby freeing slaves who started setting up their own homesteads. It illustrates that the social system was fundamentally disturbed by the changes wrought by British domination as early as 1903.

643 This process continued until the Administration
622 saw fit in 1912 to introduce legislation to prevent
175 further splitting up of communities and to give a certain amount of power to "paid native local
648 authorities . . . who shall be responsible to the District Residents for the good order and administration of their villages or areas." [3] Hence with the passing of the District Administration (Natives) Ordinance 1912, the Administration began to recognize the indigenous political functionaries and to absorb them into the general political machinery of the Territory. In this Ordinance, village headmen were recognized as possessing a certain amount of power over the people who lived in their villages. Amongst the village headmen one was to be recognized as a Principal Village Headman. The Ordinance made it clear that the position of the Principal Village Headman was in no way to be regarded as similar to the old tribal position of chief. Though the Ordinance further warned that persons who were formerly chiefs were not necessarily to be appointed Principal Headmen, it should be noted that many Principal Headmen were in fact such people. Thus, in 1912, the leadership position of certain headmen in the Territory, though always recognized by the Africans themselves before that date, was further officially recognized and they were given specific powers by the British. "Residents were to indicate carefully by their attitude towards, and dealings with, Principal Headmen the fact that they were officially recognized as chiefs in their respective sections and that, as such, they were entitled to the respect and obedience of their people." [4] Nevertheless it was planned to have a structure

[text continues top of p.149A]

8: Mitchell E-5 (1946-1947) 1949 FT7 Yao FT7
[P. 147 C]

643
175
648

[1] Recorded in the District Book at the District Commissioner's Office in Zomba.
[2] Annual Report of the Territory 1903–4 quoted in S. S. Murray, *Handbook of Nyasaland*, (London: 1932), p. 128. [3] S. S. Murray (1932). [4] S. S. Murray (1932), p. 130.

8: Mitchell E-5 (1946-1947) 1949 FT7 Yao FT7

[P. 148]

102
643
131

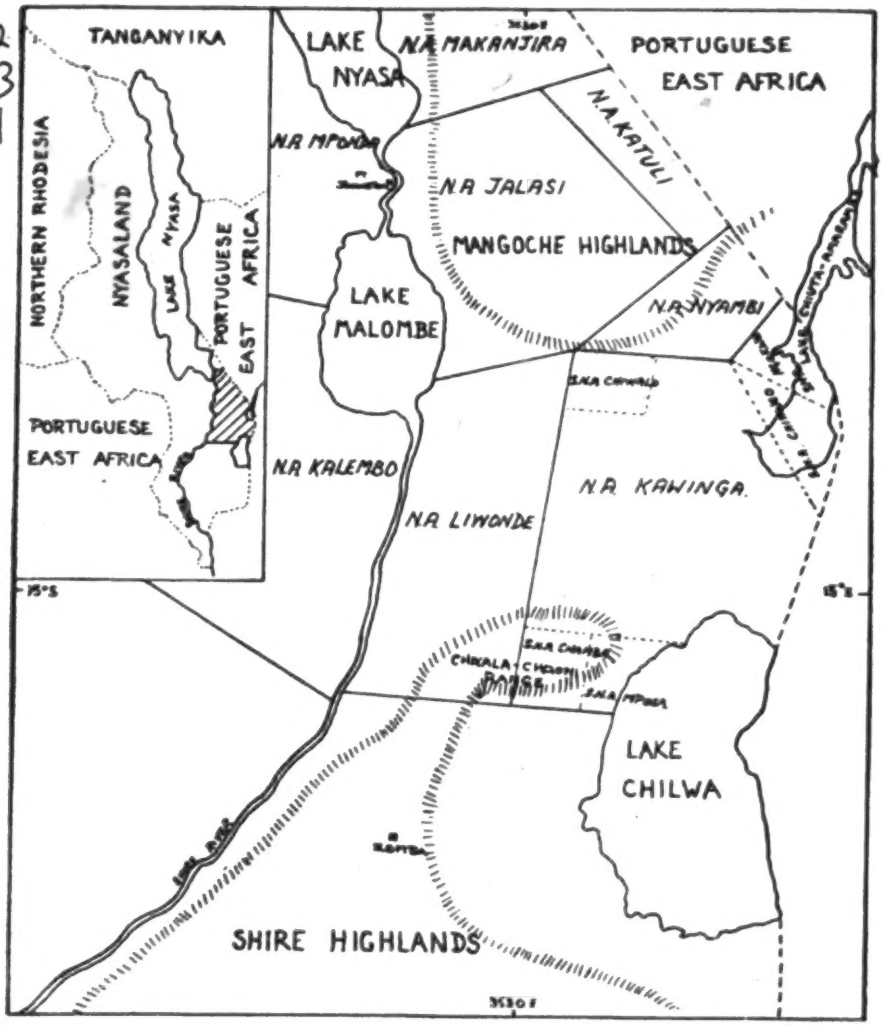

MAP TO SHOW APPROXIMATE POSITION OF CHIEFS

This map is diagrammatic. In other words it shows the relative position of the chiefs and does not pretend to represent the boundaries faithfully.

643 in which the District Commissioner would be
622 the real authority with the Principal Headmen
175 as his subordinates, to carry out certain well-
648 defined duties under his instructions. The Principal Headmen were expected to assist in the concentration of the huts in accordance with the new regulations concerning village headmen and the villages they controlled. Measures for the sanitation in the villages, sweeping and cleaning of villages, the construction of refuse-pits and latrines, were included in the Ordinance and the responsibility for this devolved upon the headmen. Village headmen were also expected to report crimes, abnormal illnesses and deaths, and so on. A clause specifically stated that no power to hear

[TEXT CONTINUES TOP OF P.149B]

IV. THE PRESENT POSITION

643 In order to illustrate the structure of the political
175 divisions with which we are dealing, I shall
648 outline the make-up of the three districts under the Native Authorities Kawinga, Liwonde and Nyambi (see accompanying map).
131 It will be recalled that Kawinga and Liwonde trace their descent from a single ancestress three generations back from the present Kawinga and five generations back from the present Liwonde. The groups under the leadership of these two brothers Liwonde I and Kawinga I, entered Nyasaland in the early part of the nineteenth century and after various campaigns in Mount Mangoche area migrated across the Shire River at Mvera and took up their position on Kongwa hill. Here the second Kawinga died. Shortly after this the groups were displaced by Ngoni raids and they recrossed the Shire River and moved southwards to displace another Yao chief, Malemia, from Mount Cikala (near Zomba), which stronghold Kawinga held until they were displaced by the British attacks in 1895. Liwonde at first occupied the neighbouring range Caoni but soon moved down to the Shire River. He too was displaced by British attacks and fled with Ka-

[TEXT CONTINUES MIDDLE OF P.149B]

643 and determine petty native cases was conferred upon the headmen, though the District Commissioner was supposed to seek their advice when necessary.
622
175
648

Therefore, from the time of conquest a pattern of superordination of the Whites and subordination of the Africans was established and the indigenous political system remained largely without official recognition until the Native Authorities Ordinance was passed in 1933. The major change wrought by this Ordinance was that Native Courts were planned and instituted by the Native Courts Ordinance of the same year. At the same time a Native Treasury was founded.

IV. The Present

POSITION

643 winga to Portuguese East Africa. They were allowed to return later and they took up their positions in an area roughly outlined in the early
175
648 part of this paper. At the same time, owing to
131 military action by the Portuguese a certain number of refugees were crossing the border into the Lake Ciuta area of Nyasaland.

TABLE 1

Demographic Composition of Political Areas[1]

162
643
631
[563]

Sub. Area	*Tot. Pop.*	*Admin. Vills.*	*Av. Pop. of Admin. Vills.*	*Tribal Composition*			
				Yao	*Nguru*	*Nyanja*	*Ngoni*
				%	%	%	%
N.A. Kawinga (Yao)	23,087	311	74	51	37	10	2
S.N.A. Camba (Yao)	5,119	61	84	72	20	7	1
S.N.A. Mpoza (Yao)	4,411	60	74	49	19	32	—
S.N.A. Chiwalo (Yao)	2,202	19	116	80	15	5	—
S.N.A. Ngokwe (Mpotola)	2,868	21	136	16	43	40	1
S.N.A. Chikweo (Mpotola)	7,102	49	145	28	56	16	—
N.A. Liwonde (Yao)[a]	12,716	106	120	75	20	5	—
N.A. Nyambi (Yao)[a]	7,335	63[a]	116	73	27	—	—

[p. 149 c]

643

162

631

[1] Abstracted from crude returns of 1946 census. District Commissioner's Offices at Zomba and Fort Johnston.
[2] Census data for a newly created S.N.A., *Sisya*, not recorded separately.
[3] Approximation only. Number of Administrative villages not ascertained.
[4] N.A. = Native Authority ; S.N.A. = Subordinate Native Authority.

162
643
631

	Total Pop.	Area sq. m.	Density per sq. m.
Kawinga	44,789	682	65·5
Liwonde	12,716	396	32·0
Nyambi	7,335	140	52·5

The Table I summarizes the present demographic position in the areas. The greater part of the area under study is divided between the Native Authorities Kawinga and Liwonde who call each other "brother". Kawinga as well as being a Native Authority with jurisdiction over five subordinate native authorities, is a chief over a certain number of villages in the same way as his subordinate native authorities are. These subordinate native authorities under Kawinga are :

631 1. *S.N.A. Cambe*, who is a matrilineal descendant of the first Kawinga's son and who still calls the present Kawinga "father", is in charge of an area along the south side of Mount Cikala ;

2. *S.N.A. Mpasa* is a matrilineal descendant of the son of the first Liwonde and therefore calls both Kawinga and Liwonde "father" (*atati*). His area lies near Lake Chilwa and contains a high proportion of the original Nyanja peoples of the area ;

3. *S.N.A. Ciwalo's* area adjoins that of N. A. Nyambi at the north of Kawinga's sub-district. Ciwalo was a sister's son to one of the previous Kawinga's and his mother's brother had succeeded, illegally in the opinion of some, to the name of Kawinga V (see p. 147). Ciwalo succeeded to his mother's brother's name that he had before he took the name of Kawinga V. The present Kawinga VI who was known as Mbogo before he succeeded must call Ciwalo "my elder brother" (*akulumunga*) ;

4. *S.N.A. Ngokwe* and 5. *S.N.A. Cikuso* are, as the Table shows, not Yao but Mpotola who are a people from Portuguese East Africa. The Mpotola have lost whatever language they had in the past and now speak Yao and as far as I could see follow Yao usage and custom. The areas under the jurisdiction of these S.N.A's lie along the north-east boundary of Kawinga's area adjoining the Portuguese territory. The Table also shows

648 District Commissioner on specific points. These points refer to some particular work of the Administration of which the District Commissioner is a representative. A villager may make enquiries about army gratuities, about tax exemption, about the administration of estates of relatives who have died in Southern Rhodesia, etc. In general we may say that the interaction between the people on one hand and the Administration on the other takes place largely in terms of an overlapping field of interest, which the tribesmen see as a part of the White system of values but to which they do not fully subscribe.

2. *The Chiefs and their Bureaucracies*

643 645 648 The chiefs and their bureaucracies stand in a peculiar position in the political structure. They are, as it were, the bridge between the indigenous political machinery activated by a system of indigenous values, subscribed to by chief and commoner alike, and the White Administration on the other hand. To the people, the chief and his bureaucracy represent the White Administration to them since it is through this set of institutions that the regulations are administered. The N.A.'s bureaucracy collects the poll taxes,[1] dogs, guns, canoes, etc., supervises the construction of latrines, etc., and the chief punishes the people for breaches of regulations (not tax defaulters) which to the tribesmen are part of the White Administration. At the same time the chief is their representative to the District Commissioner and when the District Commissioner speaks to the chief he is in effect speaking to the people. From the point of view of the Administration he is in exactly the same interjacent position: he is both their representative to the people and the people's representative to the Administration. Accordingly the oblique line in the diagram passes through the rectangles marked 'chief' and N.A.'s Bureaucracy'.

The chief has lost many of the attributes of status that he had in the early days. No longer

[P.154C]

643
645

* Actually the poll taxes are collected by a Yao clerk who is stationed at the N. A. court-house but is remunerated from the Central Treasury. He is therefore really a member of the African Civil Service but since he lives at the chief's court and messes with the chief, is looked upon by the villagers as part of the N.A.'s bureaucracy, I include him in this paper as part of the chief's staff.

643 does he monopolize the trade to the court. To-
645 day the goods are brought in by Indian traders
and are bought for cash by the African tobacco
648 growers and the returned labour migrants.
He can no longer use his slaves to increase his
wealth by capturing yet other slaves. Nowadays
his salary is insufficient for his own requirements
and he can no longer make the gifts that he used
to, to the village headmen and councillors.
Councillors (*i.e.* the *ndunas* not necessarily offi-
cially recognized by the Administration) complain
that though they are not paid they nevertheless
have to do much of the work that the District
Commissioner expects the chief to do. The
chief himself is generally too poor to pay them
though some do in fact privately remunerate
certain of their unrecognized councillors. The
643 chief is still expected to give a burial cloth
when an important headman dies, and to make
648 a gift to a headman when he succeeds to a name,
651 but his tribute of food and ivory has ceased.
The people look upon the taxes they pay to the
Administration and the licences that are paid
to the chief's court as substitute for the chief's
tribute. One informant explained that no longer
is it necessary to send a pot of beer to the chief
when beer is brewed, because nowadays a sixpenny
licence must be taken out from the court for each
brew for sale. He looked upon the licence (de-
signed by the Administration as a measure to
counteract excessive brewing and paid into the Native
Treasury and not to the chief) as a modern sub-
stitute.

643 Nevertheless, it appears that the chiefs do
manage to live at a higher standard than most
of their subjects. They usually appear to be dressed
more finely and seem to have larger wardrobes.
Most have brick dwelling houses and rather more
furniture than the average commoner. Nearly
all have shot-guns and some have rifles. This
is largely possible because the salaries are regularly
paid even if they are low, and because many of
the former obligations have fallen away. No longer
do the chiefs entertain on so lavish a scale.

●1 643 The chiefs are also able more successfully to press their claims to certain, gifts from visiting Europeans, particularly in articles which are difficult for Africans to obtain—for example, cartridges. One chief uses his rifle to shoot game and the meat is peddled round the villages by one of his servants. Some are also able to make use of the services of remand prisoners and other villagers in their gardens, thus growing more food and sometimes more of cash crops as tobacco. Other chiefs are able to use their salaries as capital and employ labourers to cultivate tobacco and other cash crops. A few returned labour migrants make small gift payments to the chief.

643 The main duty of the chief is the arbitration in disputes. The Native Courts Ordinance estab-
692 lished two classes of native courts, called respectively A and B courts, which differ in their powers. Under the same Ordinance court assessors who are remunerated from Native Treasury funds, were appointed.

693 The Native Authority's bureaucracy is made up of a large assortment of functionaries and offi-
647 cials, including in the largest court, (Kawinga's), 6 court assessors, 1 court clerk, 1 assistant court clerk, 1 community worker, 1 forest guard, 1 agricultural demonstrator, 1 sanitary inspector, 9 court messengers, 2 caretakers, 4 garetta men,[1] 1 market clerk, 1 market sweeper. Other Native Authorities also have well inspectors. These people are remunerated from the Native Treasury and the most highly paid is usually the court clerk. I do not intend to deal in detail with the duties of each but I shall deal with the more important of them and make some general remarks about their position in the structure.

693 The court assessors are supposed to assist in arbitrating cases. Under the old system there
645 were both councillors, *ndunu*, and court assessors, *mapanga*, (see p. 144). There is not sufficient provision for the remuneration of both councillors and court assessors in the modern system and there has been a general alteration in their functions. Some of the old councillors are no longer

693
647 duties which the court assessor used to in past days. The correct channel of approach to the chief now is through the court sergeant.

In most situations where the chief's orders are to be carried out, the various members of his bureaucracy execute them. For example, when the chief wants some duty to be performed by the villagers, it is the court sergeant or messenger who sees to it. The messengers carry out the instructions and wishes of the chief to all parts of his territory. To the villagers, therefore, the N.A.'s bureaucracy represent the chief when acting as his agent but they also represent the White Administration because much of their interaction with the villagers is in terms of some regulations based upon White values. The court clerk who apprehends a villager and charges him with being in possession of an unlicensed dog is acting, in the eyes of the villager, not so much as an agent of the chief, but rather as an agent of the chief representing the Administration. The sanitary inspector may explain to the man who has been charged with having no latrine, "It is the law that you should have one", and by this he means the White law.

3. *The Position of the Subordinate Native Authorities*

643
648 I have not yet considered the position of the S.N.A.'s in the structure. In the diagram they are represented as a separate interactional system. The reason why they have been represented thus, is because the S.N.A.'s regard themselves as autonomous units and in no way an integral part of the main interactional system under a chief. Each S.N.A. has his own sub-court and a small bureaucracy of his own. He sets up a replica of the situation under the chief. Each S.N.A. has the insignia of rank that the chief has: he is given the same greeting; wears the red band around his head; holds initiation ceremonies, etc. Each S.N.A. has the duty of making a sacrifice to the ancestors before and after the rains. A recent theft of a sacrificial cloth hung on a tree-shrine in a S.N.A.'s area was held to endanger the rainfall in that area alone. The chief in the area makes use of his position in the structure in relation to the Administration to bring pressure

[See p. 152 — Analyst]

643 to bear on his sub-chiefs. For example, when
648 one sub-chief mishandled a prisoner, the chief did not feel himself to be in a position to reprimand the sub-chief. He reported the matter to the District Commissioner. Another had expressed displeasure at the conviviality of the sub-chief with an Nguru man. He had given instructions that the one Nguru with whom the sub-chief was on intimate terms, should be beaten if found together with the sub-chief again. The sub-chief merely countermanded the ruling and nothing further was done about it. When one of the chiefs was to be given a medal by the Governor it was only with great difficulty that the sub-chiefs could be induced to attend the ceremony. One of the sub-chiefs said : "Why should my feet get sore walking to his capital ? He's getting the medal, not me". The Native Authority of his own account has not sufficient authority to reprimand a S.N.A. and where this must be done he must call in the District Commissioner to do it.

4. *The Village Headmen and the Villagers*

622 A District Commissioner once referred to the village headman as "the lance-corporal of the political system—doing all the work and getting all the kicks". This description is an illuminating one. The population in the area is distributed in hamlets of mainly matrilineal kinsmen usually composed of a man and his female matrilineal relatives and spouses (see p. 142). The male leader of this group I call a village headman but this should not be confused with the social personality here called the Administrative village headman. For purposes of the Administration, villages and hamlets are grouped under officially recognised and remunerated village headmen. Administrative village headmen usually have some local standing. Some have the right to wear the red band which distinguishes rank, some have the right to conduct initiation ceremonies for both boys and girls, they are all given the greeting correct for people of some rank, they are referred to by a term which signifies both the chief and the village headman (*mwenye*).

The administrative village headman has certain duties which he must perform in respect of his

692 of White values which coincide with their own.

Informants say that the position of the village
692 headman in contrast with that of the chief is
643 getting progressively weaker. They maintain
622 that cases once tried by the village headman are now taken to the chief's court. Whether this is true or not is difficult to ascertain. The fact that there is some sanction on the guilty party to settle the compensation if he is tried in the chief's court, probably pays a part. The compensation awarded is recorded in the Court Case book and the chief is empowered to keep a man under remand until it is paid. The chief sometimes supports the village headman against recalcitrant subjects. A man once refused to pay a compensation awarded against him by a village headman. The village headman referred the case to the chief who said to the man: "As you have disobeyed the order of the village headman it means that you have insulted me, the District Commissioner and the Governor". But in general there is a tendency for the central authority to be strengthened and the chief emphasizes his relationships to the White Administration in order to consolidate his position of dominance over his headmen. At a succession ceremony of a village headman the chief who had supported an unpopular candidate said: "This man has been chosen by me and the Governor agrees with me". Clearly in this insecure situation the chief saw himself against his subjects, and as part of the White Administration. He uses his power in this political situation to establish a dominance over the headmen, that he could never have established before the White men came (see p. 144).

VI. General
SUMMARY

642 depends on the field of values in which the inter-
177 action is taking place. To illustrate this with a simple example, when the court messenger exacted a levy of 1d. from each garden-owner in the area where the sacrificial cloth had been stolen from the tree-shrine, they saw in him a

2: Mitchell E-5 (1946-1949) 1956 FT7 Yao FT7

daughter's son of the first Kawinga, has been recognized as a 622
subordinate Native Authority. Village headmen also develop in 643
the same way from the relatives of the chief. Among the 205
village headmen who are of Invader stock, there are 62 who are

TABLE VII

PROPORTIONS OF RELATED AND UNRELATED HEADMEN AMONG THE INVADERS

Chief's Relatives						Non-Relatives	Total
Direct			Clan				
Mat.*	Pat.	Aff.	Mat.†	Pat.	Aff.		
17 8·3	35 17·1	10 4·9	37 18·0	22 10·7	12 5·9	72 35·1	205 100%
30·3%			34·6%			35·1%	

* Includes the six chiefs themselves.
† Those who have the same clan-name.
Mat. = Matrilineally related; Pat. = Patrilineally related; Aff. = Affinally related.

either chiefs, their direct matrilineal relatives or their direct patrilateral relatives. This represents 30·3 per cent of the total. Of these 35 or 17·1 per cent are patrilateral relatives.

The chief's sons occupied a very strong position in the early 622
Yao chiefdoms. Most sons of the early chiefs were their children 643
by slave-wives. Since there was no one on their mother's side 644
from whom they could inherit rank, it follows that they could only expect to achieve status through their father, the chief. Yet they were not, as his younger brothers and his sisters' sons were, a danger to him, because they were not in the line of succession and had no reason to wish his death. On the contrary, the bonds that unite father and son in Yao society are strong but not formal. The chief's sons, the *achiwana*, therefore came to occupy some of the most trusted positions under him. They became his military leaders; they led his caravans to the coast and back; they were the messengers who represented him to foreign chiefdoms and to the Whites when they came. In these positions the chief could trust his sons, because he knew that they

2: Mitchell E-5 (1946-1949) 1956 FT7 Yao FT7

622 643 644 had no hostile axes to grind. Younger brothers and sisters' sons might have used the military forces against him, or they might have squandered the wealth of the caravans because they had a jural right to it. As the sons grew older they were given groups of slaves and slave-wives to look after, and so they became village headmen under the chief. Many of them came to have initiation rights and hold other positions of importance.

622 643 602 601 The chief was also connected to other Invader headmen through marriage. It is clear that affinal links become in time cognatic, but the marriage of the chief with a headman's sister fixes the relationship between that headman and the chief in perpetuity. The succeeding chief does not look upon the village headman who is his mother's brother's wife's brother as a father-in-law, as he would if he were a commoner, but instead calls him 'brother-in-law'. Also, all the successors of the village headman call all the succeeding chiefs by this term, so that the political structure of the area becomes phrased in a kinship idiom: the quasi-kinship of headman and chief in this context becomes suffused with political meaning. The number of village headmen who claim some affinal relationship to the chief is not great—only 10 of the total of 205 (i.e. 4·9 per cent).

TABLE VIII

PROPORTIONS OF RELATED AND UNRELATED HEADMEN AMONG THE NEWCOMERS

622 643 602

Chief's Relatives						Non-Relatives	Total
Direct			Clan				
Mat.	Pat.	Aff.	Mat.	Pat.	Aff.		
0	13	15	24	13	16	300	381
0	3·4	3·9	6·3	3·4	4·2	78·8	100%
7·3%			13·9%			78·8%	

Among the Aborigines and Newcomers, naturally, there are very few direct relatives. There are, of course, no matrilineal relatives. The patrilateral relatives amongst the Newcomers (3·4 per cent) are those of Kawinga who have moved into Chamba and Liwonde areas. There have been various mar-

2: Mitchell E-5 (1946-1949) 1956 FT7 Yao FT7

councillors. Long ago they held a most important position within the chiefdom. They were the loyal headmen and intimates of the chief, who could therefore be entrusted with the government of outer areas. They were posted to various parts of the chiefdom; kept the chief advised of war and attacks; maintained the peace among the village headmen in their areas; and collected the ivory to which the chief was entitled and sent it to him. Nowadays, the *ndunas* find themselves in competition with other officials who have arisen from the White Administrative system. The chief also finds advisers and councillors in his court clerks and his court sergeants, but the *ndunas* still have much prestige and advise and assist the chief in his administration of the area. Earlier, I mentioned that a senior headman was allowed to have a mat to himself, and only his own friends and people of his rank could occupy it with him. The only people in the chiefdom who could share the chief's mat, were the *ndunas*, and they called him *anganga* (my friend). Because the *ndunas* were not related to the chief they were in the peculiar position of being able to settle quarrels between the chief and his family: they were the arbitrators in arguments between the chief and his 'younger brothers' (junior male matrilineal relatives), or the chief and his wives. By Yao custom, rank is inherited by a village headman's successor, so that the relationship between the chief and his *ndunas* is perpetuated through successive incumbents. In Kawinga's area, for example, the *ndunas* to-day have the same name and the same relationship and relative position with regard to the chief as the *ndunas* who invaded the country nearly 100 years ago. This traditional ranking of village headmen emerges as soon as the Government alters its policy. Recently, when the idea of group headmen was reintroduced, the chief nominated the *ndunas* to become group headmen—a position not unlike that they held before the White conquest.

There is considerable difference between the size of Administrative villages under those headmen who have the right to wear the scarlet headband and those who have not. Table XV shows this clearly. The mean number of tax-payers under the former headmen is 80, while under the latter it is only 38. Among the village headmen with the right to wear the scarlet headband 62·5 per cent had villages of more than 60 tax-payers, while among other headmen only 25·0 per cent of the villages were in

2: Mitchell E-5 (1946-1949) 1956 FT7 Yao FT7

The Rôle of the Chief in Headman's Installation Ceremonies

The second significant aspect is the importance of the chief in the installation ceremony. In each ceremony the chief has to give his formal consent to the succession. Note that the chief is approached by one of the headman's relatives, so that at this level, in spite of Kawinga's statement,[1] the succession dispute is over and the heir is decided upon. The chief's formal consent, his formal fixing of the date of installation, his personal appearance or the appearance of his representative, and his giving of the gift, all serve to set his official seal on the installation and to recognize its political significance. 643 622

The chief recognizes the leader of the group, both in his actions and his words. He also sees in the headman his representative, as when Nyambi said, 'When you disobey the headman you disobey me,' or when Kawinga said, 'Nyenje, you are responsible to report to me any unusual thing which occurs in your village here.'

When a chief comes into a village it is the village headman who entertains him. I was told that if the headman or his representative were away, the chief would be given no hospitality at all, because the villagers only entertain him through their representative, the village headman. Though the chief himself may not frequently visit villages, his representatives are constantly coming and going on his errands. Where affairs of day-to-day administration of the chiefdom are concerned these representatives are usually the court messengers, who may be paid from Native Authority funds or from the chief's private funds. The chief's representative in his tribal capacity, however, is usually his *nduna*, but it may be practically any village headman whom the chief selects. For example, he may send his *nduna* or one of his satellites as his representative to a *mapeto*.[2] He sometimes sends his representative as a referee to divinations and to chicken poison-ordeals following accusations [574] [644]

[1] Kawinga had a say in Nyenje's succession because he was a clan-relative. I have evidence that some lobbying had been going on because the successor that Kawinga chose was not chosen by Kawinga's relatives.

[2] A meeting held shortly after a funeral to decide whether death has been caused by sorcery or is due to natural causes.

643 There is little doubt that village headmen did
622 wax in power and finally break away to form the
578 nucleus of a chiefdom of their own. The chief that a headman had left could do little to regain his lost subject and he had to rule not by tyranny but by tact. Duff MacDonald, for instance, records: "When a quarrel arises between the chief of the country and an important headman the latter may rebel and found a new kingdom, thus depriving the old chief perhaps of one-third of the villages in his dominion". [1] Nkanda is an example. "Nkanda of Cherasulo was at first a headmen of Kumpama's but rebelled and lives on the Southern side of that mountain an easy day's march from Blantyre." [2]

643 The leader was known, and is still known to-day, by the term *aryene cilambo*. This might be translated as "owner of the country" but the term "owner" in this context would be a mis-translation. I prefer to translate this phrase as: "The person with whom a certain area is identified". [3] Hence when a man says, as the Yao do: "I come from Kawinga's", he does not mean that the land is owned by Kawinga, but that Kawinga is the most important man in that area.

● 645 Among the village headmen in the area under a
631 particular leader there were a number of trusted
692 village headmen called *nduna*, which term I
622 have translated as "councillors". These councillors had special duties to perform. They were in the nature of governors in outer areas and each had a number of other villages under his jurisdiction. By this I mean that these villages were supposed to take certain cases for trial to him and to approach the leader through him. The councillors were supposed to visit the village of the chief each morning and to report anything untoward. The councillors also had the important duty of advising the chief, particularly in connexion with raiding of neighbouring tribes. Councillors also arbitrated in the domestic affairs of the chief and in the all too frequent conflicts between the Chief, his sister's sons and his younger brothers.

8:Mitchell E-5 (1946-1947) 1949
[P. 154B] FT7 Yao FT7

648 District Commissioner on specific points. These points refer to some particular work of the Administration of which the District Commissioner is a representative. A villager may make enquiries about army gratuities, about tax exemption, about the administration of estates of relatives who have died in Southern Rhodesia, etc. In general we may say that the interaction between the people on one hand and the Administration on the other takes place largely in terms of an overlapping field of interest, which the tribesmen see as a part of the White system of values but to which they do not fully subscribe.

2. *The Chiefs and their Bureaucracies*

643 The chiefs and their bureaucracies stand in a peculiar position in the political structure.
●645 They are, as it were, the bridge between the
648 indigenous political machinery activated by a system of indigenous values, subscribed to by chief and commoner alike, and the White Administration on the other hand. To the people, the chief and his bureaucracy represent the White Administration to them since it is through this set of institutions that the regulations are administered. The N.A.'s bureaucracy collects the poll taxes,[1] dogs, guns, canoes, etc., supervises the construction of latrines, etc., and the chief punishes the people for breaches of regulations (not tax defaulters) which to the tribesmen are part of the White Administration. At the same time the chief is their representative to the District Commissioner and when the District Commissioner speaks to the chief he is in effect speaking to the people. From the point of view of the Administration he is in exactly the same interjacent position : he is both their representative to the people and the people's representative to the Administration. Accordingly the oblique line in the diagram passes through the rectangles marked 'chief' and N.A.'s Bureaucracy'.

The chief has lost many of the attributes of status that he had in the early days. No longer

[P. 154C]

643
645

[1] Actually the poll taxes are collected by a Tax clerk who is stationed at the N. A. court-house but is renumerated from the Central Treasury. He is therefore really a member of the African Civil Service but since he lives at the chief's court and interacts with the chief, is looked upon by the villagers as part of the N.A.'s bureaucracy, I include him in this paper as part of the chief's staff.

643 does he monopolize the trade to the coast. To-
645 day the goods are brought in by Indian traders and are bought for cash by the African tobacco
648 growers and the returned labour migrants. He can no longer use his slaves to increase his wealth by capturing yet other slaves. Nowadays his salary is insufficient for his own requirements and he can no longer make the gifts that he used to, to the village headmen and councillors. Councillors (i.e. the *ndunu* not necessarily officially recognized by the Administration) complain that though they are not paid they nevertheless have to do much of the work that the District Commissioner expects the chief to do. The chief himself is generally too poor to pay them though some do in fact privately remunerate certain of their unrecognized councillors. The
643 chief is still expected to give a burial cloth when an important headman dies, and to make
648 a gift to a headman when he succeeds to a name,
651 but his tribute of food and ivory has ceased. The people look upon the taxes they pay to the Administration and the licences that are paid to the chief's court as substitute for the chief's tribute. One informant explained that no longer is it necessary to send a pot of beer to the chief when beer is brewed, because nowadays a sixpenny licence must be taken out from the court for each brew for sale. He looked upon the licence (designed by the Administration as a measure to counter excessive brewing and paid into the Native Treasury and not to the chief) as a modern substitute.

643 Nevertheless, it appears that the chiefs do manage to live at a higher standard than most of their subjects. They usually appear to be dressed more finely and seem to have larger wardrobes. Most have brick dwelling houses and rather more furniture than the average commoner. Nearly all have shot-guns and some have rifles. This is largely possible because the salaries are regularly paid even if they are low, and because many of the former obligations have fallen away. No longer do the chiefs entertain on so lavish a scale.

643 The chiefs are also able more successfully to press their claims to certain gifts from visiting Europeans, particularly in articles which are difficult for Africans to obtain—for example, cartridges. One chief uses his rifle to shoot game and the meat is peddled round the villages by one of his servants. Some are also able to make use of the services of remand prisoners and other villagers in their gardens, thus growing more food and sometimes more of cash crops as tobacco. Other chiefs are able to use their salaries as capital and employ labourers to cultivate tobacco and other cash crops. A few returned labour migrants make small gift payments to the chief.

643 692 The main duty of the chief is the arbitration in disputes. The Native Courts Ordinance established two classes of native courts, called respectively A and B courts, which differ in their powers. Under the same Ordinance court assessors who are remunerated from Native Treasury funds, were appointed.

693 647 The Native Authority's bureaucracy is made up of a large assortment of functionaries and officials, including in the largest court, (Kawinga's), 6 court assessors, 1 court clerk, 1 assistant court clerk, 1 community worker, 1 forest guard, 1 agricultural demonstrator, 1 sanitary inspector, 9 court messengers, 2 caretakers, 4 garetta men, [1] 1 market clerk, 1 market sweeper. Other Native Authorities also have well inspectors. These people are remunerated from the Native Treasury and the most highly paid is usually the court clerk. I do not intend to deal in detail with the duties of each but I shall deal with the more important of them and make some general remarks about their position in the structure.

693 645 The court assessors are supposed to assist in arbitrating cases. Under the old system there were both councillors, *nduna*, and court assessors, *mapungu*, (see p. 144). There is not sufficient provision for the remuneration of both councillors and court assessors in the modern system and there has been a general alteration in their functions. Some of the old councillors are no longer

693 paid by the chief but still advise him, and retain
645 much of the prestige due to their rank, which is inherited. Others have been incorporated as court assessors though they may not actually take part in the duties. Some now combine both sets of duties and function both as councillors and court assessors. Some of the duties of both sets of officials, however, have been taken over by the court clerk and other court functionaries. Although the position of court assessor was part of the old tribal structure, modern court assessors see themselves as occupying a position in a structure largely of White fashioning. I once heard a court assessor when conducting an enquiry into a case of adultery, cut short the prolixity of a witness saying: "None of these long stories. We are conducting this case according to the custom of the Whites."

More illuminating still is the position that the court clerks occupy in the modern structure. They are differentiated from the vast majority of [212] the population because they are literate. All of them have been educated, usually in a mission school. A high proportion of them are Nguru [563] because more Nguru are Christian (hence educated) than Yao (see p. 151). Because he can read and write, the chief court clerk is the medium through which the chief expresses himself in writing and the medium through which he gets written information from the Administrators and others. The court clerk is therefore in a unique position of knowing all the business that comes into the chief's hand by letter. He, of course, must also write the replies so that he has a very good knowledge of what is going on in the territory. In addition, because of his education and knowledge of the ways of the White people the court clerk often makes a better councillor than the uneducated and naive traditional councillor does. Therefore in certain matters the court clerk, rather than the councillor, is the chief's most important adviser.

693 The various other officials have different
647 functions to perform, frequently of a semi-technical nature. There are sanitary inspectors, well inspectors, etc. The court sergeant who is present at the cases now performs many of the

2: Mitchell E-5 (1946-1949) 1956 FT7 Yao FT7

175 2. Free men are under their elder brother in the first instance, but
565 they may carry their cases to the headman of their village or
622 even to the chief of the country.
643 3. Slaves were entirely under their own master.[1]

The headmen's subservience to the chief is described in the following passage:

In all public transactions the headman represents his village. He receives the chief's orders and sees them carried out. When he kills
[651] an elephant he sends one of the tusks to the chief. Should he kill twenty elephants he is not expected to give up twenty tusks—two or three would be sufficient. If he shoots a large buck he gives one haunch of venison. For all such tributes he expects to receive in
[646 return a present (generally a little powder). . . . He is expected to
593] attend the chief's parliament unless he is under an elder brother in which case he is not allowed to speak, except when especially commissioned. Headmen are expected to report all cases of war, but they
[721] often attack enemies without telling their chief beforehand, saying, 'Let him hear of the enterprise when it succeeds.' Yet this is dangerous unless they are sure of success, and well acquainted with the chief's private sentiments. On reporting an attack they present the chief with part of the booty. In times of war each headman when sum-
[687] moned, must follow his chief's flag, otherwise his village is burned down, and all that fail to escape are killed or enslaved.[2]

175 Yet within the framework of this organization villages were
578 markedly autonomous. MacDonald's description, which I have
622 just quoted, brings this out very well. Elsewhere he writes:
643 'The chief may often have less influence than powerful headmen, and we have known cases where he simply contented himself with grumbling when his headmen acted contrary to his desire.'[3] The chief did not differ greatly from his more powerful headmen. A certain amount of ritual in terms of ancestor worship embellished his position, and he had some ascendancy over village headmen to whom he had given land. Yet, in the last analysis, the chief had to rely on his personal following and military power to subjugate headmen who were becoming too powerful. The chief was therefore in direct competition with his subject village headmen, and involved in a constant struggle with them for followers. MacDonald describes how the chief himself was a

[1] MacDonald, *Africana*, i, 155.
[2] MacDonald, *Africana*, i, 157.
[3] MacDonald, *Africana*, i, 155.

648 nevertheless the type of behaviour which is normal
563 between Labour Recruiter and African is dictated by the pattern of behaviour of Africans to Administrator. The Yao find it extremely difficult to separate out their attitudes to these different types of social personalities and the main reason is that they tend to categorise all White people into a general class "Whites" of whom the most common representative to them is the Administrator.

647 It is, however, impossible to consider the Ad-
648 ministrator without reference to the African Civil Service. I am using this phrase to mean those Africans who are in constant and direct interaction with the Administrator. I include the clerks, interpreters, messengers, policemen, and other intermediaries between the Administrator himself and the people. Probably of major importance is the interpreter who speaks directly to the people on behalf of the Administrator. In Southern Nyasaland the official language is Nyanja and officials are expected to learn it for their official business. Some of the Yao men
[191] in the area under study can understand and speak Nyanja but some men cannot and certainly most women cannot do so. Therefore, the tendency is for the Administrators to make use of interpreters in dealings with the Yao and other peoples in the area. The Administrators do not interact directly with various social personalities but do so rather through either their own civil service or through the N.A.'s Bureaucracy who, being educated, are able to speak and understand the official language. The Administrators are in direct interaction with their own Civil Service and only in indirect interaction with the other social personalities in the political structure.

The African Civil Service stands for a set of White values and for this reason is placed in the "Whites Values" part of the diagram.[1] The African Civil servant represents the District Commissioner or Agricultural Officer to the tribesman. The Tax Clerk, while he is collecting taxes, is part of the system of the Administrator. The Agricultural Capitao (African official) represents the Agricultural Officer to the villager when he instructs him in the building of contour ridges.

1 [See p.152 — Analyst]

647 Therefore the African Civil Service has behind
648 it the very powerful set of sanctions of the Administration, both legal and eventually military, so that it is possible for a young Agricultural Demonstrator to resist a chief and be impertinent to him. The Demonstrator acting thus knows that he has the force of the White Administration behind him. He knows that he is able to report to the Agricultural Officer if the chief refuses to carry out instructions. The African Civil Service too, are outside the reach of the chief's power of punishment save where sanctioned by law. It was possible for a certain clerk of the District Commissioner while on tour, to sleep with the divorced wife of the chief—a thing which no villager would have dared to do for fear of the wrath of the chief. The African Civil Service is also the correct channel of approach to an Administrator. Should a villager wish to see the District Commissioner he must first approach the messengers and interpreters before they are taken to the District Commissioner. The strong position of the African Civil Service in the situation is quite obvious.

448 The Administrator, through the mediation of his African Civil Service, interacts with the chief, the village headmen, and the villager in different situations. Probably in all, the greater part of the Administrator's rule of tribal Africans is spent in interaction with the chief. This interaction is occasioned by their respective positions in the political structure. The Administrator may discuss with the chief such things as the Treasury, the general food situation, the court cases, some unsatisfactory feature of the chief's administration. The Administrator may interact with village headmen in the same sort of way over specific points of common interest. The Agricultural Officer may reprove the village headman for the existence of some mound-gardens in some of the village gardens, the District Commissioner upbraid him on the general state of disrepair in the village. Finally, the villager may approach the

643 The chiefs are also able more successfully to press their claims to certain, gifts from visiting Europeans, particularly in articles which are difficult for Africans to obtain—for example, cartridges. One chief uses his rifle to shoot game and the meat is peddled round the villages by one of his servants. Some are also able to make use of the services of remand prisoners and other villagers in their gardens, thus growing more food and sometimes more of cash crops as tobacco. Other chiefs are able to use their salaries as capital and employ labourers to cultivate tobacco and other cash crops. A few returned labour migrants make small gift payments to the chief.

643 The main duty of the chief is the arbitration in
692 disputes. The Native Courts Ordinance established two classes of native courts, called respectively A and B courts, which differ in their powers. Under the same Ordinance court assessors who are remunerated from Native Treasury funds, were appointed.

693 The Native Authority's bureaucracy is made
647 up of a large assortment of functionaries and officials, including in the largest court, (Kawinga's), 6 court assessors, 1 court clerk, 1 assistant court clerk, 1 community worker, 1 forest guard, 1 agricultural demonstrator, 1 sanitary inspector, 9 court messengers, 2 caretakers, 4 gazetta men, [1] 1 market clerk, 1 market sweeper. Other Native Authorities also have well inspectors. These people are remunerated from the Native Treasury and the most highly paid is usually the court clerk. I do not intend to deal in detail with the duties of each but I shall deal with the more important of them and make some general remarks about their position in the structure.

693 The court assessors are supposed to assist in
645 arbitrating cases. Under the old system there were both councillors, **ndunu**, and court assessors, **mapanga**, (see p. 144). There is not sufficient provision for the remuneration of both councillors and court assessors in the modern system and there has been a general alteration in their functions. Some of the old councillors are no longer

8:Mitchell E-5 (1946-1947) 1949 FZ7 Yao FZ7
[P.155C]

647
493

[1] A "gemmy" was a one-wheeled conveyance in which an Administrator or chief was wheeled around while on tours. Nowadays gemmies are hardly ever used and the men who used to be employed to push them are used mainly as messengers.

693 paid by the chief but still advise him, and retain
695 much of the prestige due to their rank, which is inherited. Others have been incorporated as court assessors though they may not actually take part in the duties. Some now combine both sets of duties and function both as councillors and court assessors. Some of the duties of both sets of officials, however, have been taken over by the court clerk and other court functionaries. Although the position of court assessor was part of the old tribal structure, modern court assessors see themselves as occupying a position in a structure largely of White fashioning. I once heard a court assessor when conducting an enquiry into a case of adultery, cut short the prolixity of a witness saying: "None of those long stories. We are conducting this case according to the customs of the Whites."

More illuminating still is the position that the court clerks occupy in the modern structure.
[212] They are differentiated from the vast majority of the population because they are literate. All of them have been educated, usually in a mission
[563] school. A high proportion of them are Ngoni because more Ngoni are Christian (hence educated) than Yao (see p. 151). Because he can read and write, the chief court clerk is the medium through which the chief expresses himself in writing and the medium through which he gets written information from the Administration and others. The court clerk is therefore in a unique position of knowing all the business that comes into the chief's hand by letter. He, of course, must also write the replies so that he has a very good knowledge of what is going on in the territory. In addition, because of his education and knowledge of the ways of the White people the court clerk often makes a better councillor than the uneducated and naive traditional councillor does. Therefore in certain matters the court clerk, rather than the councillor, is the chief's most important adviser.

693 The various other officials have different
697 functions to perform, frequently of a semi-technical nature. There are sanitary inspectors, well inspectors, etc. The court sergeant who is present at the cases now performs many of the

693
647

duties which the court assessor used to in past days. The correct channel of approach to the chief now is through the court sergeant.

In most situations where the chief's orders are to be carried out, the various members of his bureaucracy execute them. For example, when the chief wants some duty to be performed by the villagers, it is the court sergeant or messenger who sees to it. The messengers carry out the instructions and wishes of the chief to all parts of his territory. To the villagers, therefore, the N.A.'s bureaucracy represent the chief when acting as his agent but they also represent the White Administration because much of their interaction with the villagers is in terms of some regulations based upon White values. The court clerk who apprehends a villager and charges him with being in possession of an unlicensed dog is acting, in the eyes of the villager, not so much as an agent of the chief, but rather as an agent of the chief representing the Administration. The sanitary inspector may explain to the man who has been charged with having no latrine, "It is the law that you should have one", and by this he means the White law.

3. *The Position of the Subordinate Native Authorities*

643
648

I have not yet considered the position of the S.N.A.'s in the structure. In the diagram, they are represented as a separate interactional system. The reason why they have been represented thus, is because the S.N.A.'s regard themselves as autonomous units and in no way an integral part of the main interactional system under a chief. Each S.N.A. has his own sub-court and a small bureaucracy of his own. He sets up a replica of the situation under the chief. Each S.N.A. has the insignia of rank that the chief has: he is given the same greeting; wears the red band around his head; holds initiation ceremonies, etc. Each S.N.A. has the duty of making a sacrifice to the ancestors before and after the rains. A recent theft of a sacrificial cloth hung on a tree-shrine in a S.N.A.'s area was held to endanger the rainfall in that area alone. The chief in the area makes use of his position in the structure in relation to the Administration to bring pressure

3 [See p. 152 — Analysis]

1: Tew E-4 (no date) 1950 FT7 Yao FT7

Administration, but many cannot afford to do this. The people regard the taxes they pay to the Administration as a substitute for the chief's tribute. As the Native Authority the chief appears to be responsible for tax-collection, as the tax-clerk lives at the court.

The chief is responsible to the Administration, among other things, for latrine construction and for punishing the infringement of various regulations. His main duties are judicial, as judge of the Native Authority Court. The bureaucracy attached to the Native Authority includes a number of functionaries, e.g. Kawinga's, in 1947 one of the larger courts, had 1 court clerk, 1 assistant court clerk, 1 community worker, 1 forest guard, 1 agricultural demonstrator, 1 sanitary inspector, 9 court messengers, 2 caretakers, 4 gazetta men, 1 market clerk, 1 market sweeper, 6 court assessors. These are paid by the Native Treasury. Court assessors help in the arbitration of cases. The key position at court is held by the court clerk, and usually he is not a Yao, but an Nguru, who, because he is literate, is the medium of all written communications to and from the chief. The court sergeant is the correct channel of approach to the chief, and the court messengers represent the chief to the villages.

The territory of a Native Authority is divided into 'administrative villages', under officially recognized and paid headmen. Within these areas there are clusters of huts, which do not form officially recognized administrative units, but which are none the less villages under their own hereditary headmen. The administrative village headman is responsible for the payment of taxes in his area, and for the observance of various regulations. He is usually a man with some standing in the Yao social system: one who has the right to conduct a boys' initiation ceremony, or to wear the head-band signifying rank. His authority is derived partly from his status as a senior kinsman, partly from his status as a village headman. If the administrative village under him includes a number of hamlets unrelated to the administrative village headman, he will delegate his responsibilities in these hamlets to their own headmen. Consequently, since village headmen perform administrative duties, whether they are officially recognized or not, there is competition among them for the official posts. In order to bring pressure to bear on the chief to make him concede marks of rank, they may threaten to move out of his area, and so to deplete his following. In spite of this bargaining tool, the position of the village headman *vis-à-vis* the chief is said to be getting progressively weaker. Cases once tried by them are now being taken to the chief's court, and the latter is able to draw on the power of the Administration to establish his dominance over the headmen.

The chief in the modern system stands as the representative of the people to the white Administration, and as the representative of the white Administration to the people. One reason for the lack of direct contact between the Administration and the people is the fact that Yao is not the official language of the district, and therefore Yao interpreters are necessary.

There are some occasions when the chief and his officials perform the functions proper to their office under the old social system. The white Administration is not concerned with their ritual functions, nor with initiation rites, nor does it take cognisance of witchcraft offences. Accusations of witchcraft are judged by the same personnel as accusations of theft or adultery, but they are not dealt with in the court house, nor recorded in the book.

2: Mitchell E-5 (1946-1949) 1956 FT7 Yao FT7

adhere to a headman whose position is fixed in an historically determined hierarchy.[1] Yet it stands the test of observation that there are in all tribes of this region small concentrated settlements of people who look upon themselves as groups, and who play an important part in the political activities of the community.

In my analysis of the social structure of the Yao, I have taken the village and tried to see it as a unit in a larger field of political relations. I have also tried to see it as a unit in itself, internally differentiated. I have taken the district under the jurisdiction of a Native Authority as the whole, the universe, which is to be resolved into parts. Before the British forces subjugated the tribes of Nyasaland, there had been a period of intensive tribal movement and intertribal warfare. Some groups had gathered around successful warriors and maintained their identity; others had been broken and dissolved by stronger forces. The British conquest ended the period of military adjustment, and for administrative purposes the country was divided into districts. Within these districts some adherents gathered around their former leaders while others preferred to remain where they were. Tribes such as the Nyanja, who were the original inhabitants, remained in residence; newcomers such as the Lomwe immigrated from Portuguese East Africa. But when the Administration later officially recognized chiefs in these districts it was the successful Yao invaders who were recognized and not the indigenous Nyanja or immigrant Lomwe.

While the war-making units of the Yao—the tribal groups under numerous chieftains—were broken up by the British forces, the smaller component units, the villages, survived. From early records and from the tales told by old men who can still remember something of the pre-White days, we know that the people have always lived in villages, though their structure has probably changed since those days. The villages were far and away the most important social units within any of the chiefdoms. The 'village' was and still is a key concept in Yao thought. I shall demonstrate later that it was the smallest group acting in the political field. At the same time it was, and still is, the field in which kinship was most significant. This is why I have taken

[1] Barnes, J. A., in his essay 'The Fort Jameson Ngoni', *Seven Tribes, and Politics in a Changing Society*, Oxford University Press for the Rhodes-Livingstone Institute (Cape Town, 1954).

2: Mitchell E-5 (1946-1949) 1956 FT7 Yao FT7

797 176 because it was anxious to avoid the censure which its earlier colleagues had suffered. This Mission also felt it could not stand by and see cold murder done in front of its eyes. Yet fugitives came to it as they had to the U.M.C.A., so that the Mission, despite its unwillingness, was inexorably drawn into political relationships with the Yao in the area. The lay members severely punished certain wrongdoers. Eventually an African was murdered at the Mission. They tried the murderer, found him guilty, and allowed a local headman to execute him. The Home Authorities looked upon this action as a trespass from the Mission's proper function. The Mission suffered severe public censure, and several of the lay members were dismissed. It was clear that a Mission in the Territory could not be a mission alone; it could not escape the political implications of the situation, and for the success of its venture some civil authority had to be established.

The Establishment of British Rule

175 648 In the meantime Livingstone's publications were bringing the horrors of the slave-trade home to the people of Britain, and more and more pressure was exerted to bring it to an end. As a result, in 1878, Captain Elton, the Consul at Mozambique, obtained permission to conduct an expedition to Lake Nyasa to enquire into the slave-trade. The British population in the Shire Highlands was now increasing so much that in 1883 a British Consul was appointed. From then on, until the close of the century, Britain followed a militant policy against all slave-traders, amongst whom were the Yao. No active steps were taken to institute a formal government over the territory, until in 1889 the Portuguese appeared at the confluence of the Ruo and Shire Rivers with a large military expedition which they maintained was scientific. Accordingly, on November 21st, 1889, the Acting-Consul declared the territory north of the Ruo to be a British Protectorate. The next year, Mr. A. Sharpe made treaties with most of the Native chiefs in the area. These treaties were later ratified by the Anglo-Portuguese convention of June 1891. It is clear that the British Government was protecting the treaty chiefs against the slave-raiders, and ensuring that no other European power assumed responsibility for this service.

2: Mitchell E-5 (1946-1949) 1956 FT7 Yao FT7

The pacification of Nyasaland after this was largely the suppression of the slave-trade. The Commissioner of the Protectorate (H. H. Johnston) wrote in 1891: 175 648

> I felt bound to make our Protectorate of Nyasaland a reality to the unfortunate mass of people who are robbed, raided and carried into captivity to satisfy the greed and lust of the Yao race, these again being incessantly incited to engage in internecine war and slave-raiding forays by the Arab and Swahili slave-traders who travel between Nyasaland and the German and Portuguese littoral. The big men in this part of the Protectorate with whom it behoved me to deal and whom I must either persuade or coerce into acceptance of an anti-slave policy and sufficient subservience to the new administration as would put an end to further civil wars and inhumane practices, were the following:
>
> Makanjila and Kazembe, ruling on opposite coasts of the south end of Lake Nyasa.
>
> The Makandanje clan of chiefs (Tshindamba, Zarafi, Nkata) which dominates the country between the east bank of the upper Shire, Lake Pamalombe and the Portuguese boundary.
>
> Mponda, the powerful chief holding the Shire where it leaves Lake Nyasa, and possessing a large tract of country along its western bank.
>
> The Angoni chief Tshifusi, who dwells behind Mponda.
>
> Tshingwalu-ngwalu and Msamara, Yao chiefs along the western bank of the upper Shire, half-brothers and bitter haters of Mponda.
>
> Liwonde, chief ruling an exceedingly rich tract of land along the east bank of the upper Shire.
>
> Tshikusi, the great Angoni chieftain dominating all the hill country between the west bank of the Shire and the Portuguese frontier.
>
> Kawinga, one of the most powerful of the Yao chiefs who dwells near the north-west corner of Lake Shirwa and who commands a great slave-route to the coast, and lastly
>
> Tshikumba, who after being for ten years a roving bandit living on the plunder of the missionary caravans between Blantyre and the upper Shire, has at last settled down on Mount Mlanje to a steady career of slave-trading.[1]

Except for the two Angoni, all the chiefs mentioned are Yao, and three of them, Jalasi, Kawinga and Liwonde, were forbears of the chiefs in whose areas I made my study. The history of the Administration's activities of the next five years is almost

[1] *Papers relative to the Suppression of Slave Raiding in Nyasaland.* C. 6699 (1892). Commissioner Johnston to the Marquis of Salisbury, Nov. 24th, 1891.

2: Mitchell E-5 (1946-1949) 1956 FT7 Yao FT7

175 entirely a story of the subjugation of this list of chiefs. Acting-Commissioner Sharp wrote in his annual report in 1897: 'The
●648 Yaos . . . were the chief slave-raiders for the Arabs, and in consequence nearly all our expeditions for 1891 to 1895 were undertaken against various sections of this tribe.'[1] The British South Africa Co. had made available a sum of £10,000 a year for providing a police force. As early as 1891, a raid was made on Cikumbu, a Yao slave-trader who had attacked a European coffee plantation in the Mlanje area. After this, there was a continual series of punitive expeditions against various native groups, usually after some slaving incident which precipitated British action. Captain Maguire was killed in 1891 by Makanjila's men, and shortly afterwards the British forces suffered a reverse at the hands of Jalasi. Unsuccessful attacks had been made on Kawinga's stronghold at Chikala. In 1893, two contingents, each of 100 Sikhs, arrived, and with this force more active measures were taken to control the slave-route to Quilamane through Mlanje district. In 1894, the Yao chief Makanjila was attacked and thoroughly defeated. In 1895, there was a concerted effort by the chiefs Kawinga, Jalasi and Matipwiri to oust the British from the Highlands. This commenced with an attack by Kawinga on the friendly chief Malemia, in Zomba area. A force was sent to protect the Missionaries at Domasi, and it stopped the main onslaught. After that, the stronghold of Chikala was scaled and Kawinga completely dislodged. He retreated to the east, and Matipwiri and his relative Mtirimanje were captured. The power of these chiefs was completely broken and no more expeditions were necessary. In 1896, Katuli, a neighbour of Jalasi's, was captured and in the same year Liwonde, who had so far eluded capture, was apprehended and sent as a political prisoner to Chiromo in the extreme south of the Protectorate.

In the meantime the Portuguese were making similar punitive expeditions into the region due east of the Protectorate, and many refugees came into the Territory from Portuguese East Africa. Notable amongst these were the Mpotola groups under Chikweo and Ngokwe, who are to-day settled near Lake Chiuta.

In those parts of the Territory where military action was no longer necessary the framework of the Administrative system was

[1] *Annual Report, 1896.* C. 8438, p. 12.

2: Mitchell E-5 (1946-1949) 1956 FT7 Yao FT7

soon erected. As early as 1893 the Protectorate was divided into Administrative divisions and Collectors were appointed in each. Coinage was issued; a hut tax of 3*s.* was introduced; European claims to land and mineral rights were settled with the chiefs—all large estates were issued with certificates of claim; and a postal system was initiated. The old order of independent chiefdoms had gone for good and the Africans had to adjust their way of living to a new order.

The Village as a Unit in pre-White Times

Though there are earlier records of villages among related tribes, the earliest we have of the Yao are those of Livingstone.[1] In the records of his journeys up the Shire and the Rovuma Rivers, he states that the people lived in villages. Rowley's reports[2] of the Shire Highlands in 1861 show that the Nyanja were organized in villages similar to those of to-day, but the best reports on the Yao village are by Duff MacDonald, who worked as a missionary in the Shire Highlands and the Zomba area from 1878 to 1881. Duff MacDonald published both a general ethnographic account of the Yao around Blantyre and a journal of day-to-day events on the mission. From these descriptions we are able to reconstruct much of the political organization of Yao groups before the Whites came to Nyasaland. Though the information from these early accounts about the internal structure of villages is scant, the reports of the importance of domestic slavery are good, and this is valuable in assessing its effect on the internal structure of modern Yao villages.

From MacDonald's description it appears that each Yao chiefdom was a congeries of almost autonomous villages. The headman of these villages recognized the superiority of one of their number whom we may call 'chief'. The unity of each village and its corporateness were expressed in many ways. One of these was in connection with the worship of ancestor spirits. MacDonald writes:

> [The village headman] is the recognized high priest who presents prayers and offerings on behalf of all that live in his village. . . . It

[1] Livingstone, D. and C., *Narrative of an Expedition to the Zambesi and its Tributaries, and of the Discovery of Lakes Shirwa and Nyassa. 1858-64*, John Murray (London, 1865). Waller, *Last Journals.*

[2] Rowley, *The Story of the Universities Mission.*

2: Mitchell E-5 (1946-1949) 1956 FT7 Yao FT7

tenance of the whole state under a new king,[1] but the Yao 175
political units seem to have split into two factions when divisions 643
appeared within them. The dissident faction left the parent chiefdom and established itself somewhere else as an independent entity.

The picture my informants have given me substantiates Mac- 175
Donald's account, though his contact was mainly with Mangoche 439
and not with Machinga Yao. My informants, however, placed 484
greater emphasis than he did upon the importance of trade with 567
the coast. A slave-trading trip was not a venture which the 622
ordinary village headman could undertake with equanimity. 643
The journey to the coast, to Quilimane or to Kilwa, was long and arduous, and strong military protection against bandits was needed. A caravan could only be sent by a chief or someone of like status, so that the coastal trade became the monopoly of the chiefs. Headmen who had ivory and slaves to send to the coast included them in the chief's caravan. When it returned, the headmen were able to collect calico and beads to the value of their contribution. Gun-powder also seems to have been a chief's monopoly. Thus, in fact, he did have some physical control over the military activities of his subject village headmen, since he could withhold supplies of gun-powder if he wished. But in a society where minor chieftains were inimically poised against each other, the maxim 'a chief without people is nothing' had much more significance than it has to-day: a village headman's ultimate sanction was that he could withdraw his support from one chief and give it to another.

The Effects of White Conquest

It was into a society thus organized that the first Missionaries 175
came. I have already described how the Missionaries, by taking 643
in runaway slaves, and by occasional armed combat, entered 648
into political relationships with the chiefs. With the establishment of the Protectorate, the policy, clearly expressed in Sir Harry Johnston's letter,[2] was to stamp out slavery. This was done in numerous campaigns against the Yao chiefs [3] so that by

[1] See Gluckman, M., 'Succession and Civil War among the Bemba: An Exercise in Anthropological Theory', *Human Problems*, xvi (1954), 6–25.
[2] See *l.c.*, p. 29. [3] See Chap. II, pp. 29–30.

2: Mitchell E-5 (1946-1949) 1956 FT7 Yao FT7

175 643 648

1896 the superior British militia had completely subjugated all the Yao chiefs who had resisted them.

British power initially became merely an element in the political relationships of chiefs: they used it against their rivals, as Kalembo used it against Cingwalungwalu,[1] or Malemia against Kawinga. Yao chiefs did not unite in the face of their common enemy.[2] As the campaign against the slave-traders progressed, however, Yao chief after chief fell to superior British arms. They, who only a few years earlier were accepting the submission of refugees, themselves had now to 'grasp the leg of the White people'.

It is clear that they looked upon their submission to the Whites in much the same way as they looked upon the submission of refugees to themselves. To submit to a man was to accept slave or near-slave status. According to informants, Kawinga sent a large tusk of ivory[3] to the British as a placatory gift. His ceremonial knife, and the knives of his important headmen, were taken from them by Robert Codrington, Assistant Collector of the northern part of Zomba.[4] A chief with whom I was once discussing slavery expressed neatly the attitude of the Yao chiefs to their subjugation. He said: 'There is no slavery to-day—we are the slaves of the Government'. The chiefs who returned to the Protectorate, therefore, returned as subjects, and were fully aware of this. In the new regime, the former chiefs had to recognize a superior authority and the British Administration provided the framework within which the old rivalries had to be rephrased.

The chief's position in relation to his subjects as a result of this catastrophic change was, of necessity, weakened. When the slave caravans stopped, the chief's source of wealth disappeared, and with it much of his power. He was no longer much wealthier than his subjects. The wants of the people could now be more easily satisfied by the numerous trading stores which

[1] Mitchell, J. C., 'The Political Organization of the Yao of Southern Nyasaland', *African Studies*, viii, 3 (Sept. 1949), 141–59.

[2] Johnston maintains that Matipwiri, Jalasi and Kawinga had planned a joint attack against the British in 1895. If this is so, the attempt was completely unsuccessful. See Johnston, H. H., *British Central Africa*, Methuen & Co. (London, 1897), 130. See p. 30.

[3] *The British Central African Gazette*, ii, 18 (Nov. 15th, 1895), reports that Kawinga sent in some ivory as 'indemnity' but was told to pay more and to send in 60 more guns.

[4] They are to-day in the Southern Rhodesia National Museum, Bulawayo.

2: Mitchell E-5 (1946-1949) 1956 FT7 Yao FT7

began to appear in the Territory. The chief in this situation had the same wants as his subjects but was in no way able to satisfy them. He was precluded by his position from becoming a labourer and thus securing a cash income, while his subjects, until recently dependent on his monopoly for their wealth, had been drawn into the new economy of the Protectorate and were comparatively affluent.

The cessation of warfare and slavery thus affected the prestige of the chiefs seriously. The Administration's policy was at first to impose a fine of guns on those who broke rules. In July 1894, for example, Chapola village on the south-west corner of Lake Malombe was fined 30 guns for being in possession of slaves.[1] Later the Administration introduced an ordinance requiring the registration and licensing of guns, and many guns were confiscated on account of breaches of this regulation. Not only were the Yao disarmed, but the Administration also punished those who broke the peace. At the same time the Government was pursuing an active policy against domestic slavery. For example, in the village of Chapola mentioned above, 26 slaves were released. The slaves, formerly bound to their masters by the physical sanction of being liable to death at his hands in cases of desertion, were now liberated. It is not surprising to find the Collector at Mlanje reporting, in 1895, that the power of Kuntirimanja and Matipwiri was failing, and that they were losing people.[2]

Statements of informants confirm that slaves were then starting to leave their erstwhile masters to set up villages of their own. In 1904, the Administration reported: 'The tendency is for the old large communities to be broken up; for the small man to collect a surrounding of friends and go off and build new hamlets in other localities'.[3]

From my own investigations, there appear to have been two possible reasons for this. First, communities may formerly have lived in consolidated groups in order to protect themselves from slave-raiders and other assailants. With the disappearance of the slaver and of war, the bond of the need for security would,

[1] *B.C.A. Gazette*, i, 10 (July 28th, 1894).
[2] *B.C.A. Gazette*, ii, 8 (June 15th, 1895).
[3] *The Annual Report of the Territory, 1903–4*, quoted by S. S. Murray (ed.), *Handbook of Nyasaland*, Crown Agents for the Colonies (London, 1932), 188.

2: Mitchell E-5 (1946-1949) 1956 FT7 Yao FT7

175 567 621 648 therefore, be weakened, and the component parts of the village scattered. This is what the Administration argued when it wrote about the split-up of communities: 'This tendency is to some extent gratifying, in that it originates in the native's sense of his complete security under the existing Government.'[1] I have not much evidence that this is true, and in fact do not think it is. Second, there is little doubt from my village histories that the slave-groups attached to various village headmen were deserting their former masters and setting up independent villages.

175 361 621 648 It is significant that the report speaks of the 'old large communities'. Duff MacDonald, writing of the Blantyre area in the period 1877–81, says: 'Usually the natives live in small villages containing 10 or 11 huts, occasionally in large villages containing three times as many. They do not like to pack themselves closely. In time of peace few villages contain more than 100 people.'[2] Hynde, writing of the Domasi area, says: 'Sometimes a village consists only of five or six huts; more commonly twelve or twenty and rarely above thirty. The chief's village at Domasi consists of more than 100 houses but that is an exceptional case. The villages occur at intervals of quarter to one mile.'[3] In July 1895, the Collector at South Nyasa made a census of all the villages on the west bank of the Shire (64 villages). These were mainly Yao, but also included some Nyanja. The modal size of villages, calculated from his published figures, is 26 huts.[4] The reports of MacDonald and Hynde agree well, although they describe different areas. The Collector's average was slightly larger, but one is not sure that he has not included two or three settlements under one headman. A village, Changali, was marked as having 217 huts, but a note indicated that they were scattered. Also the numerical accuracy is not above question because a large proportion of hut totals end in 0 or 5, indicating estimation rather than enumeration. From my own observation, the arithmetic mean of a sample of 37 villages in two separate areas was 11 huts (mode was 8 huts).

It seems, therefore, that the optimum size for Yao villages has always been about 10 to 15 huts, and that the disintegration

[1] *Annual Report of the Territory, 1911–12*, Murray, *Handbook*, 128.
[2] MacDonald, *Africana*, i, 145.
[3] Hynde, R. S., 'Among the Machinga People'.
[4] *B.C.A. Gazette*, ii, 3 (Sept. 1895).

2: Mitchell E-5 (1946-1949) 1956 FT7 Yao FT7

noted by the Administration in 1904 was in fact the break-up of larger communities under important village headmen. These communities were, as is evident from MacDonald's writings, largely made up of slaves and their descendants. In the light of the internal structure of modern villages, I believe that the fragmentation going on at that time was due to the breaking of the bond between captor and slave—a bond formerly reinforced by physical sanctions that included the killing of a slave by his captor. Therefore, while the groups thus linked to the headman may have moved out of his village, his matrilineal kinsmen, who were bound to him by bonds of deep sentiment and religious beliefs, remained. The irreducible 10 to 15 huts were therefore likely to have been those of the headman's own matrilineal kinsmen. When the Administration ascribed the continuing tendency all over the Protectorate to the splitting up of villages into small family groups[1] it was probably describing the splitting off of descendants of slave-wives to found villages of their own. While this process of readjustment was going on, the Administration stepped in with legislation designed to control what it considered to be unchecked social disorganization. The Administration spoke of the necessity to

> build up an organization to control the rising generation of natives who, finding themselves without the restraining influences to which their parents were accustomed, have of recent years evinced an inclination to emancipate themselves from the disciplinary responsibilities of village life and obedience to authority, and to adopt habits prejudicial to native family life.[2]

To accomplish this task the Government introduced the District Administration (Natives) Ordinance of 1912. This was the Ordinance about which the Administration wrote in 1913:

> Framed, as it has been, in accord with native ideas and practice, it is a measure which none the less avoids the defects of the archaic system of tribal rule and which has as its aims the gradual formation of a subsidiary local government by means of Sectional Councils of Headmen chosen as far as possible by natives themselves and presided over by the District Resident.[3]

---

[1] *Annual Report, 1911–12*, Murray, *Handbook*, 128.
[2] *Annual Report on the Protectorate for 1912–13*, Murray, *Handbook*, 129.
[3] Murray, *Handbook*, 129.

2: Mitchell E-5 (1946-1949) 1956 FT7 Yao FT7

175 621 648 Under this Ordinance, the Administration provided first of all for the formation of 'villages'. A Rule made under Section 3 of the Ordinance and published in Gazette Notice No. 113 of 1913, gave the Resident the power to concentrate the native population, where necessary, into organized villages of not less than 20 huts and to disallow the erection of isolated huts. 'In order to give effect to this policy the erection of new huts was to be confined to existing villages, and the occupants of isolated huts were to be instructed to remove, as opportunity offered, to an approved village.'[1]

175 622 648 The Ordinance then proceeded to create a line of authority from the District Resident to the villagers through Village Headmen and Principal Headmen. Districts in the charge of Residents were divided into Administrative Sections. A Principal Headman was put in charge of each. The Sections in turn were sub-divided into Village areas (groups of villages), each in the charge of a Village Headman.

Under the Ordinance, Principal Headmen and Village Headmen were given specific duties and responsibilities in their respective areas. The Principal Headman, for example, was:

> to be responsible for the good order of his Administrative Section, the maintenance of discipline, the reporting of crime and the apprehension of criminals, sanitation, the control of the movement of cattle, reporting outbreaks of epidemic disease, and for any other matters in the interest of law and order and the general welfare of the native community.[2]

The Principal Headman was also to 'secure the attendance at the Magistrate's court of natives whose presence was required in connection with deceased estates, remittances, government labour and so on, and to exert his influence to accelerate the payment of hut and poll taxes'. These duties in turn devolved upon Village Headmen—they were responsible for their smaller areas as the Principal Headmen were responsible for the larger.

Unfortunately we have no information about the way in which Principal and Village Headmen were chosen. Murray records that

> Residents were not necessarily to recommend those natives who had hitherto been recognized as Chiefs or Headmen. It was considered

[1] Murray, *Handbook*, 132. [2] Murray, *Handbook*, 130.

2: Mitchell E-5 (1946-1949) 1956 FT7 Yao FT7

that in some cases the previous records or age of such persons would be found to be such as to preclude their selection to transact the responsible duties of Headmen under the Ordinance, and in such circumstances Residents were to consider the claims of other natives of good standing, intelligence and reputation residing in the section, who, having assisted the Resident in native administrative matters in the past, might be expected to carry out the duties efficiently, and who, at the same time, were known to enjoy the confidence of the natives with whose supervision they were entrusted.[1]

Elsewhere Murray writes, 'The system introduced by the Ordinance was in no way intended to revivify or perpetuate government by native chiefs. The position of Principal Headmen under the Ordinance was in no sense to be similar to the archaic one of the chief.'[2] Yet in the area in which I worked it was precisely the traditional chiefs who were made Principal Headmen—Jalasi, Nyambi, Kawinga, Liwonde and Malemia. In retrospect it is difficult to see how it could have been otherwise. Considering the sentiment attached to the chief in Yao society, it seems scarcely possible to conceive of leaders who 'enjoyed the confidence of the natives with whose supervision they were entrusted' who were not chiefs in the traditional sense.

In spite of its avowed intentions not to 'revivify or perpetuate government by native chiefs', the Administration proceeded to invest the traditional chiefs with its own power. 'Residents', Murray writes, 'were to indicate carefully by their attitude towards and dealings with Principal Headmen the fact that they were officially recognized as chiefs of their respective sections and that, as such, they were entitled to the respect and obedience of their people.'[3]

It would be wrong to imagine that the military actions at the end of the last century had completely destroyed chieftainship. Those who had resisted the Whites were driven out of British Territory but were allowed to return very soon afterwards. These chiefs then took up the threads of their life as best they could under the changed conditions. The degree to which the new Administration had become a force in Yao politics is illustrated by an entry in the District Book in Zomba. Kawinga III had died in August 1905, and the record reads: 'There were two

[1] Murray, *Handbook*, 131.
[2] Murray, *Handbook*, 130.
[3] Murray, *Handbook*, 130.

2: Mitchell E-5 (1946-1949) 1956 FT7 Yao FT7

175 claimants to the succession, Kumlomba and Chiwalo. Their
622 claims were really very equal and His Majesty's Commissioner
(April 1906) called in Kumlomba and the most important
643 headmen and decided the succession by their vote.' District
648 Books have many entries dating before 1912 showing that the
Administration did not consider chiefs and village headmen insignificant.

The appointment of village headmen needed the approval of the Provincial Commissioner, but presumably the recommendation came from the District Resident. It is reasonable to suppose that the District Resident in turn had discussed appointments with the principal headmen. Whatever the mechanics of the appointment, however, the outcome was that most village headmen who held positions of prestige in the indigenous system of ranking became village headmen under the Ordinance.

The District Administration (Natives) Ordinance thus made official the unofficial relationship which had previously existed between the Administration and the chiefs and the village headmen. The traditional relationship of chief to village headman and village headman to villager, however, became suffused with a new significance. These relationships had become part and parcel of the extensive administrative organization of the British Empire.

The Modern Administrative Structure[1]

648 The Native Authority Ordinance of 1933 and the Native
642 Court's Ordinance provide the legislative framework for the
modern administrative system. Under Section 23(*a*) of the
643 Native Authority Ordinance, the rules, orders, proclamations, notices and appointments made under the District Administration (Natives) Ordinance were not repealed. The duties which had so long been incumbent upon chiefs and village headmen, therefore, continued unaffected.

The chief, however, was set up at the centre of a bureaucracy and given autonomy in a number of directions. The Native Court's Ordinance gave him legal powers to inflict punishment on his subjects; the treasury under his authority could raise

[1] I have dealt in some detail with the position of the chief in the modern situation in my article 'Political Organization of the Yao of Southern Nyasaland'.

2: Mitchell E-5 (1946-1949) 1956 FT7 Yao FT7

funds and could spend them. The chief could make rules and regulations in specific matters.

Burnt-brick court houses, burnt-brick offices and clinics have appeared at the traditional headquarters of the chiefs. A court clerk collects court fees and fines, issues receipts and records the cases in a register. A tax clerk issues licences and collects taxes, receives correspondence addressed to the chief and writes the chief's replies. In addition, there are other functionaries—community workers, forest guards, agricultural demonstrators, sanitary inspectors, market clerks, well inspectors and so on.

In other words, the position of the chief is becoming more and more that of an administrative head-of-department.[1] His position *vis-à-vis* his subjects is coloured by this. The chief is at once the people's representative to the Administration and the Administration's representative to them.

[1] Compare Barnes's statement about the Ngoni: 'the great warrior chief has become in effect the only member of the Administration who never goes home to Britain on leave'. Barnes, J. A., *Politics in a Changing Society*, 172.

2: Mitchell E-5 (1946-1949) 1956 FT7 Yao FT7

compounds, especially in areas where there are man-eating lions,[1] so that it is no longer an infallible indicator of the hut-owner's rank.

Minor village headmen always allow their superiors to sit on a chair. If village headmen of commensurate status are present, chairs may be sought for them all. But a minor village headman never occupies a chair, even if one is available, in the presence of his superior. At a meeting, for example, a chief occupies a chair and so may his most important *ndona* or councillor. The more important headmen sit alone on separate mats, for a man only shares a mat with his equals, and then only rarely. Junior headmen, however many there are, have to try to squeeze themselves on to one mat or squat on the ground.

Important headmen also have the right of walking in front of their juniors. If there are three or four headmen returning from, say, a court case, they arrange themselves in the pathway in an order which reflects their rank. As they file down the narrow field paths the leader is the most senior among the group. After him come the other headmen and last of all the commoners. This order of precedence is also followed when initiands pass through the tribal initiation ceremonies. The sisters' sons and other matrilineal descendants of important headmen precede those of the less important headmen. At Chiwalo's hut also, I have noticed that the more important headmen sit under the verandah while listening to private cases. The less important headmen sit with the commoners under a shelter or out in the sun.

I have been discussing the visible marks of prestige. But high rank also tends to carry with it some other privileges which are not immediately observable. The most obvious is Government recognition. I have already mentioned that under the 1912 Ordinance, village headmen were recognized by the Administration. These Administrative village headmen, who had certain duties to perform, were paid a small annuity and were in earlier days given a 'book' in which the tax payments could be recorded. To-day, the Yao still describe Government recognition as 'having a book'. Administrative village headmen derived more benefit from Government recognition than merely an

[1] The huts in Plate IX (*a*) and (*b*) are in Nanwera area where there are man-eating lions. Most huts have compounds. A large proportion of huts in areas where there are no lions also have compounds.

2: Mitchell E-5 (1946-1949) 1956 FT7 Yao FT7

622 554 648 annuity. This recognition publicly announced their superior status, because not all headmen could be Administrative headmen. We do not know exactly how the Administrative headmen were appointed when the Ordinance was introduced. The observable results, however, are that no headman, as far as I am aware, who was of superior status in the indigenous ranking system, is not an Administrative headman to-day. Being an Administrative headman is them in itself an indicator of rank.

622 554 643 415 969 881 Rather more important than this is the right to hold initiation ceremonies. MacDonald says that these rights were held by the chief only, but it is not clear whether the word 'chief' used here refers to the village headmen or the 'chief of the land'. Nowadays, the rights are held by village headmen as well as the chief. The right to hold initiation ceremonies is signified by the possession of a small flat basket (*cisela*) in which the oblational flour for the ceremonies is carried. When a chief grants a *cisela* or oblational basket to a village headman, what in fact he does is to grant him permission to approach the spirits of his ancestors. The headman uses the basket on three occasions during the initiation ceremonies. First, before the ceremony is announced he pours a little cone of sorghum meal at the root of a special tree in or near the village. This tree is known as the *nsola*, or the shrine-tree where all offerings to the ancestors are made. While he works the flour through his fingers to allow it to fall in a cone, he calls on his ancestral spirits and asks them to intercede on his behalf with the spirits of the chief's ancestors. He then formally requests permission to hold the initiation ceremony. This cone is left intact through the night. Should it collapse the interpretation is that the spirits are not willing that the ceremony should take place and it is postponed for some days. Offerings are made until eventually the cone, by remaining intact through the night, indicates that all is propitious for the ceremony to be conducted. The second occasion when the oblational basket is used is when the village headman or chief goes down to the grass sheds where the rites of segregation and aggregation take place. Here he pours flour over a twig and begs the safe conduct of the initiands through this physically and mystically dangerous period. Third, each individual initiand, and his or her mother, is touched on the forehead and forearm with the flour on the evening that the initiands leave for the grass sheds. During

2: Mitchell E-5 (1946-1949) 1956 FT7 Yao FT7

Arabic greeting to their seniors. This is done by placing the 622
left hand on the chest and bending slightly forward to the village 554
headman, saying, '*Subaye*'. The senior should then respond 593
'*Alaye*'. Also, important headmen are usually buried in the 766
centre of the village, not in the common graveyard. The tomb
of an important headman or personage, usually built of stones, concrete or brick, is called *nasi*. The right to bury in the village must be obtained from the chief 'because the land is his', and in Kawinga's area a fee of 6*s*. must be paid to him.

The Struggle for Government Recognition

Thus far, I have been discussing the ways in which the rank of 622
village headmen may be expressed. I now describe the way in 554
which these marks of prestige are associated in the three cate- 643
gories of headmen we have distinguished, and in what way the
competition between them is phrased. I have already described 648
how all the chiefs in the areas to which I am referring are all successors of the original leaders of the invasions, and are usually the present Government representatives or Native Authorities.

The people must recognize the rank of chief because mystical beliefs prescribe activities in one direction, and because the limiting structure of the White Administration does so in another. A village headman cannot hold initiation ceremonies without the permission of the chief because of the mystical sanction, but the chief also has legal authority over his subject headmen. He as Native Authority is recognized by the Government and is its representative to his people. The Native Authority Ordinance (1933) specifically imposes penalties on those who do not recognize the authority of the chief. Under Section 12 of the Ordinance, the Native Authority may arrest without warrant any person who is accused of failing to obey his order or direction, interferes with his lawful duties, professes to be a chief or assumes the duties of a chief without Government approval. Under Section 13(*i*) severe penalties are imposed on any person who conspires against or in any way attempts to undermine the lawful power and authority of any chief or Native Authority. His position is therefore greatly strengthened against the village headmen and I have been told of one or two prosecutions by chiefs under this section. Nowadays, the mere threat of

2: Mitchell E-5 (1946-1949) 1956 FT7 Yao FT7

622 643 559 648 action under this Ordinance is sufficient to cow his opponents. Therefore, the chief may also control the rise to power of his headmen because he is a Government official. At the same time a village headman may not move away to form a chieftaincy of his own: should he migrate with his followers nowadays, he will always find himself under a White system of Administration which upholds some other chief against him. The rank system must operate within a circumscribed framework and in reference to the chiefs.

622 559 648 I have already mentioned that being an Administrative village headman is a mark of prestige. Most of the struggle for rank revolves around this axis. Under the 1912 Ordinance, village headmen were only recognized if they had at least 20 taxable huts under them and they were paid a small annuity proportionate to the number of their taxable huts.[1] Before a headman could be recognized, therefore, he had to gather around him at least 20 tax-payers. After a headman had been recognized, the more villagers he could attract the higher his annuity. This situation is one with which the Yao headmen were long familiar. It is indeed the same process that went on before the Whites came, and that was outlined so clearly by Duff MacDonald, except that it is now cast in slightly different form. In consonance with the new money economy, superior status, marked by more dependants, brings a higher financial reward. But it would be false to imagine that the prospect of financial gain is the only spur to a village headman's attempts to enlarge his following. A headman of a large village as such, is still a 'big' village headman.

622 643 559 648 A headman who has sufficient followers to enable him to press a claim for a 'book' goes to the chief for it. The chief considers the merits of the case, but is unwilling to grant too many 'books' in his area. If he supports the claim the matter is referred to the District Commissioner, who considers the application, not in terms of the indigenous struggle for rank, but in terms of general Administrative considerations, such as finance,

[1] A definite rate of remuneration was fixed in 1918: it was compound at 12s. for every 500 taxes. See Murray, *Handbook*, 142. Under the 1933 Ordinance the remuneration was fixed at 4d. per Government tax of 6s. to a village headman and 2d. per 6s. to a Native Authority. *Report on Native Affairs for the Year Ended 31st December 1933*, Government Printer (Zomba, 1934), p. 5.

2: Mitchell E-5 (1946-1949) 1956 FT7 Yao FT7

and the ease of administering groups with centralized authority. If he agrees, the necessary alteration is made in the tax-registers, and the new Administrative headman is paid his annuity and is called up by the District Commissioner whenever he holds a meeting. To the District Commissioner the chiefdom is made up of the villages on the tax-register, and in a situation of political importance he calls on the headmen of those villages for decisions. For example, when a chief was being installed, the District Commissioner called each Administrative headman forward and asked him whether he agreed to the succession. When the District Commissioner wishes to discuss any matter with a villager he calls forward the Administrative headman. The position of village headmen in the political structure becomes more effective after they have been recognized by Government. 622 643 559 648

I have no accurate measure of the proportion of all village headmen who are recognized by Government. From my records the percentage of Administrative village headmen out of the total of recognized village headmen is: 622 648 559

	No. Admin. Villages	% of Total recognized
Kawinga	160	84
Liwonde	104	71
Mpasa	30	48
Chikweo	48	43
Ngokwe	21	40
Chamba	61	39

I have full records for the smaller chiefdoms, Mpasa, Chikweo, Ngokwe and Chamba, but I know for certain that the figures for Kawinga and Liwonde are incomplete. My fullest and most reliable records are for Ngokwe and Chikweo, so that we may estimate roughly that less than half of the village headmen are Administrative village headmen.

Naturally the village headman, whose taxable population will be reduced by the granting of a new 'book', opposes this in the same way as his ancestor opposed the emigration of his village members in pre-White days. In 1947, in Jalasi's area for example, there was an argument hinging on this. 622 559 691

3:Stanton D-5 (ca. 1912) 1922 ??? Yao ???

That these several sections of the Wayao differ in many respects may be seen by comparing the Amangoche of *Africana*[1] with the Amachinga of this article. I am not sufficiently conversant with the Amangoche to make a definite statement on this point but I am inclined to believe that after longer residence and wider knowledge, Macdonald would have found that some of his statements needed revision. Those whom he considered the "Yao proper" but whom I prefer to speak of as the Amangoche seem to have a considerable admixture of Anyanja, since their language contains many Chinyanja words and many of their customs are practically those of the Anyanja. I am of the opinion that the Amachinga may be regarded as more typical of the Wayao, and except when ambiguity might arise, I shall speak of them as the Yao.

The original home of this Bantu speaking people is uncertain; in historic times all the sections of the Wayao were originally grouped in that part of Portuguese East Africa around the hill called Chao, whence they probably derived their name, *Wa Chao* or *Wa Yao*. About the middle of the nineteenth century, as the result of inroads by neighboring tribes of Alolo from the southwest, and raids by the Makwangala, a branch of the Angoni of Zulu origin, from the northwest, disruption of the Yao people occurred, and the divisions mentioned above, moved toward Nyassland. The Mamanga branch settled for the most part along the eastern shore of Lake Nyasa but a sub-section known as Tambala Yao resided also west side of the lake. The Machinga made a settlement near Lake Chiuta under a number of old chiefs, including Malemya (Nakutandwa), Kawinga, Chembola, Kalombola, and Mazie.

The descents of the Makwangwala again caused the Wayao to move on from Chiuta to Namiaga on the Mikoko stream. Here Malemya suffered another defeat at the hands of the Angoni; many of his people were driven off and taken to the neighboring Angoni country where they were held in captivity for some time. Finally they were rescued by the enterprise of one of Malemya's old men, Kalongola, who went alone to the Angoni, saying that he wished to live with them and with his own brethren. One day, he asked the Angoni if they would like to see their captive dance, and when they assented, he called the Yao together, and clapping his hands to keep time, he began to sing one of their dance songs. Gradually he gathered all the Yao into the village open space, dancing and singing; then, keeping to the same air, he told them why he had come, using their own language which the Angoni did not understand. "Malemya, our chief, remains at the Mikoko stream. It is not far off. We must all join him again. Now dance for joy. If anyone does not return there, it is his own fault." Then, a few at a time, the dancers left the crowd and stole away into the bush and, as night came on, they all made off and reached Malemya's camp in safety.

Malemya's people were again attacked by the Angoni, and on this occasion they defeated their enemies. The Angoni retreated and skirting Zomba mountain, reached the third

[1] Macdonald, op. cit.

3: Stanton D-5 (ca. 1912) 1922 FT7 Tao FT7

River at Mpindi where they intended to settle. Here, an old chief, knowing that their presence would cause trouble, persuaded them by tales of many cattle far away on the other side of the river, to cross over, and there they remained.

Kawinga and Malenya, then, to avoid further raids from the north went down to the Upper Shiré River near Lake Pamalombe, Kawinga going to Mvera, while Malenya stayed on the east side of the river among the Anyanja, claiming friendship with them because they have many of the same clan names. Later, Malenya moved up to the highlands about fifteen miles north of what is now Zomba, and Kawinga went to Chikala. Malenya was friendly with the Anyanja chief, Chenyani, who was of his clan, and was therefore able to buy from him for a red blanket all the country from the Likwenu stream to the Nanadzi River, a district thirty to forty miles long. There 14 people settled.

Kawinga was once again attacked by the Makwangwala from the north, but beat them back, after which they returned to the country whence they came — German East Africa near Lake Nyasa. The Angoni chief was killed in this battle, and the story goes that two Yao captives were told off to carry the crimsoned body back to the Angoni country for burial. As they were not provided with food for the journey, the two men began to eat the corpse. After several days, this was discovered; one of the men was killed but the other escaped to tell the tale. These were barbarous days, and the Yao relate that after raiding a village, the Angoni would leave a pot cooking on the fire with the body of a child in it, well covered with beans, so that when they had gone away with their booty and the villagers who had taken refuge in the forest returned hungry, they would start eating the beans and then come upon the body of the child, and having eaten of the juices of a human body, they would have committed a terrible sin.

The immigration of the Amakhinga into the country around Mangochi mountain caused the Amangochi Yao settled there to move. They passed into the Blantyre and Mlanje districts, and invaded the country of the Anyanja. The chief, Malenya, known as Nakwambo died about 1880, and was succeeded by his nephew, a sister's son, according to the Yao custom. This nephew, Wanchinsa, then took the name of Malenya.

In consequence of this succession, there was considerable bad feeling between Wanchinsa and the other aspirant to the chieftainry, his cousin, Kumtaja. The latter moved down to the plain below Zomba mountain to the south, where he gathered about him a band of friends and malcontents. Malenya decided to attack him and with this purpose, sent two messengers, Mkapiti and Mayondela, asking Chikwi and his Angoni to come and do the job for him. Led by Nyamoko, Nyemnoli, and Kalanji, the Angoni came from the Shiré River opposite Blantyre, via Matope. They attacked and routed Kumtaja who, owing to the thick country, managed to fall back with most of his people toward Lake Chilwa. There he was received by his cousin, Chimombo, a son of Nakwambo, and father of my interpreter, Chenga, who ruled among the Anyaw. Afterwards, he moved to Mpindi on the Shiré where he built a stockaded village.

* Died July 16, 1914

3:Stannus D-5 (ca. 1912) 1922 FT7 Yao FT7

After the defeat of Kumtaja, Chikusi and his Angoni routed Kumtumanja, a brother of Malemya, who had also been making a nuisance of himself. Kumtumanja, who suffered from a large hydrocele, is supposed to have lost his balance on account of this impediment, and fallen into a stream where he had stopped to drink and to have been drowned. 175 167 648

The Angoni still burned for more warfare, and Malemya, fearing that with his work done, they might prove a nuisance to him, turned them on to the Amangoche Yao around Blantyre. Thither they set off on a raiding expedition and returned to their own country via Chiradzulu. This raid took place in 1884.

During the next few years, Kawinga, who had always held a grudge against Malemya for having got ahead of him to the best country, occupied the chief with raiding and warfare. In 1891, Wandalama died, and was succeeded by Chisala, the son of his sister, Chiégwe, and at the present time, he is the reigning Malemya.

It is of these Amachinga Yao under Malemya that the following notes are written. I have gone at some length into the history of these people in order to disarm criticism by those who, familiar with other sections of the Wayao, may not agree with all my statements.

Life History. Generally speaking, the life of the Yao native in the old days was full of 181
ease spiced with the excitement of intertribal warfare. He cultivated his crops, kept a few goats and chickens, and relieved the monotony by hunting. Even domestic slavery was not a great hardship, nor did the Yao probably suffer from coast slave-raiding to the same extent as many other tribes. As children, they are wont to spend their days free from care, seldom reprimanded, and rarely or never physically chastised. During youth, the same 857
easy lot is theirs, with the addition from time to time of a few small tasks; minor household duties for the girls, such as drawing water, sweeping the hut, and "minding" the baby, while the boys hoe or fetch and carry for their fathers in the village or in the bush. Left to their own devices, they play games,[1] dig out rats' nests, or shoot birds with bows and arrows.

Now, as formerly, when they are about five years old, the girls usually go to live with their grandmother who may thus have a number of children around her; or several girls of a somewhat more advanced age may sleep together in a hut dormitory. Boys of this age all live in a big hut called *nyumba ja chachanda*, "the boys' dormitory." This is their quarters until one by one they leave to get married. The girl, similarly, remains in the girls' dormitory or with her grandmother until she is taken in marriage.

Puberty. The first interruption of this placid life of youth is the onset of puberty or the 881
first initiation ceremonies.[2] Formerly, these ceremonies took place after puberty but of late years, as is pointed out elsewhere, they are performed much earlier.

Child betrothal. Betrothal in childhood or before birth is not uncommon. A woman 584
learning that some friend of hers is pregnant will arrange that if a girl is born, her son will marry the friend's daughter, or a man taking a fancy to a little girl will select her as his

[1] Vide infra, p. 305. [2] Vide infra, p. 246.

III. THE ENTRY OF THE WHITES

175 797 648 The first settlements in Nyasaland were in the Shire Highlands where a Church of Scotland Mission was built in 1876. In 1878 the African Lakes Company was founded to take over the trading activities of the Mission. As the White population grew the necessity for some non-missionary organization to regulate the relationships between Africans and the growing body of White settlers, who now included planters and traders as well as missionaries, became more and more pressing. Eventually in 1883 a British Consul was appointed. In 1891 to meet the activities of the Portuguese, a Protectorate was established and the military measures that had been proceeding against the slave traders were now intensified.

175 648 The military police used by the British authorities had arms which the Yao could not withstand, and even the most successful of Yao military groups was soon destroyed. Breech-loading rifles outshot the Yao's muzzle-loading guns and cannon were also used by the British in some actions. The British had a force of Sikhs well-trained in military manoeuvres. Even the previously impregnable Mount Cikala, so long held by Kawinga and his forces, was successfully assaulted. The superior arms of the British left an indelible impression on the Yao who had long conducted successful military campaigns, and in due course these arms came to be identified with the force of the value system of the Whites. One of the more immediate results of the success of White armaments was that certain Yao chiefs seized the initiative and used the British forces as a tool in their own political machinations. The history of the rise of Kalembo, although his country is outside the area of study of this paper, is interesting in this respect. Before the Whites came Kalembo, younger brother of Mazuula, who was the father of the notorious Mponda, was an insignificant character. Just before the

8:Mitchell E-5 (1946-1947) 1949
[P.1458] FT7 Yao FT7

III. The Entry OF THE WHITES

175 648 British started actively to pacify the country, the sons of Mponda were at war with each other and Cingwalungwalu was on the way to dominating the whole of the west of the Shire River bank above the Murchison falls. After the British had demonstrated their efficiency by a few attacks on some of Nkata's forces, Kalembo approached the British leader and complained of the war in his territory. The British forces accordingly attacked and destroyed Cingwalungwalu's forces thereby leaving the way open for Kalembo to establish himself under the British wing as an important chief of the west bank of Lake Malombe. Amongst the chieftancies studied in this paper there appeared to have been no direct use of the British military forces in internal politics.[1] The Whites in this way immediately became a factor in tribal political organization. First of all some chiefs endeavoured to use the military force of the Whites directly in their tribal politics. Later on as military actions came to an end the power of the Whites continued to be tapped by chiefs and other personalities in the political structure in order to manipulate the tribal political set-up to their own advantage. In the main the power of the British Administration though still an active agent in tribal politics is now present as an abstract and invisible but nonetheless potent force. How this is done to-day I hope to be able to show by an analysis of the interaction of chiefs, African civil servants and village headmen.

101 175 619 643 As a foundation to this view of Yao politics, the detailed history of the three chieftains Kawinga, Liwonde and Nyambi is illuminating. Kawinga, Liwonde and Nyambi all belong to the same division of the Yao tribe, i.e. Macinga. There are about nine such divisions but only four are to be found in Nyasaland. The Acisi live near the Portuguese East African border in the Port Johnston area (Katuli's area) and the

8:Mitchell E-5 (1946-1947) 1949 FT7 Yao FT7

[P. 145C]

648
175

* There is some evidence that Mpeng the son of Livemde may have helped the British forces or subdue a neighbouring chief, Cambo the son of Kawinga.

643 551 175 [601]

mon ancestress. The first Kawinga and the first Liwonde were maternal brothers and to this day Kawinga and Liwonde call each other "brother". Nyambi however was a sister's son of an early leader Mkumba who was the father of Nkata, and their clan-name was *amilani*. Nkata therefore called Nyambi "father".[2] Nkata was the first to move into Nyasaland and Mkumba and Nyambi followed afterwards. Later the Nkata name was dropped and an Arabic name Zarafi, corrupted to Jalasi, was substituted. Hence the present Jalasi calls the present Nyambi "father". Kawinga and Liwonde both call Nyambi *alamu*, or brother-in-law, it is said because one of the early Nyambi's married a woman who bore the clan-name of *andrew*.

643 175 648

The groups under Kawinga and Nkata entered Nyasaland and gradually expanded until Jalasi, as he became known, dominated the area around Mount Mangoce in the present Fort Johnston District, and Kawinga, safely enscoured on Mount Cikala, dominated most of the area north of this point. Jalasi, Kawinga and Liwonde were heavily defeated by British forces in 1895-6 and driven out of British Territory. Later on they were allowed to return after they had been ordered to surrender and effectively disarmed. When they had returned, the chiefs were virtually ignored and as far as can be ascertained the effect of the British government was to destroy the power of the chiefs and substitute the system of British administration for theirs. Nevertheless, it is apparent from entries in the District Book that even though it were not the official policy, the administrating officers considered it important that the chiefs should maintain some power. Thus when Kawinga III died in August 1905 the District Book records: "There were two claimants to the succession, Kombombe and Chiwalo. Their claims were really very equal and H. M. Commissioner (April 1906) called in Kombombe and the most important headmen and decided the succession by their vote." The

Mitchell E-5 (1946-1947) 1949
[P.147A] FT7 Yao FT7

643
175
648

report goes on to say that the newly elected chief Kumlomba "had been mad once and still has a weak looking face and is a weak man. He has no real influence with his people and is ruled by his young men's advice. He means well but does not act on his own ideas sufficiently."[1] This comment shows that even though the Administration may have acted on this occasion for the preservation of peace, to the Yao it seemed to be approving their indigenous institution in appointing the successor. Informants say that when Kawinga IV died in 1913 his successor Chisalo, who was the unsuccessful claimant of the report in the District Book, was able to succeed to the name against some Yao opposition, because of his influence with the administration.

As early as 1903, only seven years after the last military action was taken against a Yao group, the position of the defeated chiefs in the new political structure was being considered. Thus the Report of the Protectorate 1903–1904 reads: "A somewhat difficult question for consideration is the extent of power which should be allowed to native chiefs. Before British influence was established a chief had unlimited powers of life and death, and was able to keep his people in order. He did so not by kindness, but through fear. At the present day, when chiefs are not allowed to use any of their old methods, the people formerly subject to them often refuse to obey or to take any notice of their directions. The tendency is for the old large communities to be broken up: for the small man to collect a surrounding of friends and go off and build new towns in other localities. There are very few chiefs in British Central Africa who are of great assistance to the Magistrate so far as judicial work goes. There are, of course, notable exceptions, but as a rule it is not safe to give any power to native headmen."[2] I feel that the view of chieftainship expressed in this report is erroneous and that the chief was never as powerful over all his subjects as the 1903 administration assumed. Also the break-up of large communities,

643 I feel, was not due to a break-up of the chief's
175 power but rather to a breakdown of domestic
648 slavery and the system of sanctions that lay behind it, thereby freeing slaves who started setting up their own homesteads. It illustrates that the social system was fundamentally disturbed by the changes wrought by British domination as early as 1903.

643 This process continued until the Administration
622 saw fit in 1912 to introduce legislation to prevent
175 further splitting up of communities and to give a certain amount of power to "paid native local
648 authorities . . . who shall be responsible to the District Residents for the good order and administration of their villages or areas." [8] Hence with the passing of the District Administration (Natives) Ordinance 1912, the Administration began to recognize the indigenous political functionaries and to absorb them into the general political machinery of the Territory. In this Ordinance, village headmen were recognized as possessing a certain amount of power over the people who lived in their villages. Amongst the village headmen one was to be recognized as a Principal Village Headman. The Ordinance made it clear that the position of the Principal Village Headman was in no way to be regarded as similar to the old tribal position of chief. Though the Ordinance further warned that persons who were formerly chiefs were not necessarily to be appointed Principal Headmen, it should be noted that many Principal Headmen were in fact such people. Thus, in 1912, the leadership position of certain headmen in the Territory, though always recognized by the Africans themselves before that date, was further officially recognized and they were given specific powers by the British. "Residents were to indicate carefully by their attitude towards, and dealings with, Principal Headmen the fact that they were officially recognized as chiefs in their respective sections and that, as such, they were entitled to the respect and obedience of their people." [9] Nevertheless it was planned to have a structure

[text continues top of p.149A]

8:Mitchell E-5 (1946-1947) 1949 FT7 Yao FT7
[P.147 C]

643
175
648

[illegible] Recorded in the Dispute Book at the District Commissioner's Office in Eastbo[illegible]
[illegible] Annual Report of the Treasury 1903-4 quoted in S. S. Mitchell, *Handbook of Nyasaland*, (London: 1919), p. 128. [illegible] S. S. Mitchell (1919). [illegible] S. S. Mitchell (1919), p. 130.

643 in which the District Commissioner would be
622 the real authority with the Principal Headmen
175 as his subordinates, to carry out certain well-
648 defined duties under his instructions. The Principal Headmen were expected to assist in the concentration of the huts in accordance with the new regulations concerning village headmen and the villages they controlled. Measures for the sanitation in the villages, sweeping and cleaning of villages, the construction of refuse-pits and latrines, were included in the Ordinance and the responsibility for this devolved upon the headmen. Village headmen were also expected to report crimes, abnormal illnesses and deaths, and so on. A clause specifically stated that no power to hear

[TEXT CONTINUES TOP OF P.149B]

IV. THE PRESENT POSITION

643 In order to illustrate the structure of the political
175 divisions with which we are dealing, I shall
648 outline the make-up of the three districts under
131 the Native Authorities Kawinga, Liwonde and Nyambi (see accompanying map).

It will be recalled that Kawinga and Liwonde trace their descent from a single ancestress three generations back from the present Kawinga and five generations back from the present Liwonde. The groups under the leadership of these two brothers Liwonde I and Kawinga I, entered Nyasaland in the early part of the nineteenth century and after various campaigns in Mount Mangoche were migrated across the Shire River at Mvera and took up their position on Kongwa hill. Here the second Kawinga died. Shortly after this the groups were displaced by Ngoni raids and they recrossed the Shire River and moved southwards to displace another Yao chief, Malonia, from Mount Cikala (near Zomba), which strongholds Kawinga held until they were displaced by the British attacks in 1895. Liwonde at first occupied the neighbouring range Ceni but soon moved down to the Shire River. He too was displaced by British attacks and fled with Ka-

[TEXT CONTINUES MIDDLE OF P.149B]

643 and determine petty native cases was conferred
652 upon the headmen, though the District Commis-
175 sioner was supposed to seek their advice when
648 necessary.

Therefore, from the time of conquest a pattern of superordination of the Whites and subordination of the Africans was established and the indigenous political system remained largely without official recognition until the Native Authorities Ordinance was passed in 1933. The major change wrought by this Ordinance was that Native Courts were planned and instituted by the Native Courts Ordinance of the same year. At the same time a Native Treasury was founded.

IV. The Present Position

643 wings to Portuguese East Africa. They were
175 allowed to return later and they took up their
648 positions in an area roughly outlined in the early
131 part of this paper. At the same time, owing to military action by the Portuguese a certain number of refugees were crossing the border into the Lake Chiuta area of Nyasaland.

TABLE I

Demographic Composition of Political Areas[1]

162
643
631
[563]

Sub. Area	Tot. Pop.	Admin. Vills.	Av. Pop. of Admin. Vills.	Tribal Composition			
N.A. Kawinga (Tonga)	22,087	211	54	75	5	5	5
S.N.A. Cantine (Tonga)	5,119	61	84	72	20	7	1
S.N.A. Mpuma (Tonga)	4,411	60	74	49	19	32	—
S.N.A. Chinyale (Tonga)	2,202	19	116	80	15	5	—
S.N.A. Ngabwe (Chewa)	2,066	21	136	14	45	40	1
S.N.A. Chikowa (Chewa)	7,102	49	145	28	36	36	—
N.A. Liwonde (Tonga)	12,716	106	120	75	20	5	—
N.A. Nyambo (Tonga)	5,505	47?	116	73	27	—	—

563 to be initiated according to the Yao custom (*lipondo*). In general, the Ngoni headmen are village headmen in the same way as the Yao are and they follow the same pattern in political behaviour.

563 62 At the moment, throughout the areas, the various tribal groups live in kinship clusters so that under one Yao administrative headman there may be two or three unrelated Yao kin-groups and possibly one or two Ngoni groups living quite separately. Though the population in the area as a whole is mixed, usually the village groups are tribally homogeneous. So far little inter-marriage has taken place. I shall not here analyse this situation, though it is politically pregnant. In many ways the Ngoni immigrants [71] are more progressive than the Yao. Most Yao in this area are professed Moslems and do not attend the local schools which are Christian. However, the missions have been more successful among the Ngoni and they are becoming more educated and advanced. A good proportion of the Government posts in the area is filled by Ngoni for this reason. This is most significant in the context of the general situation as will become apparent in the description below. For the rest of the paper I shall consider the political structure as I see it, in terms of the social personalities in the structure, and the presence of these non-Yao groups is implicit in the rest of this analysis.

V. The Political Structure

449 462 177 the Administration has persuaded the chief to pass and the full significance of which lies in a system of European values. These systems of values are foreign to each other in many features. Opposition between the two groups, White and Black, must arise if their behaviour is affected by different sets of values. The Yao, for example, believe that most deaths are caused by sorcery and claim the right to take punitive measures against the sorcerer. The Whites do not believe in this and prevent punitive action against people

8:Mitchell E-5 (1946-1947) 1949 FT7 Yao FT7

[P.152]

DIAGRAM

SUMMARY OF POLITICAL INTERACTION IN YAO AREAS

648
642
177

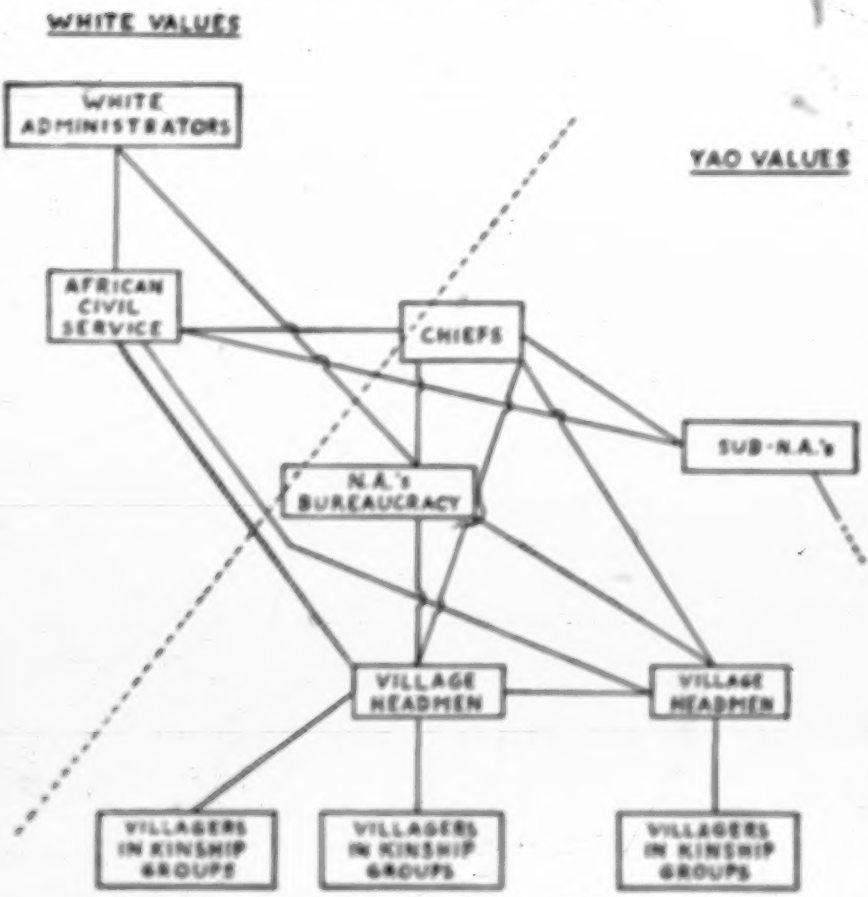

(Only the main lines of interaction are included in this diagram.)

648
642
177

who are, to them, innocent. The diagram has been divided obliquely to represent these two systems or fields of values. The division of the diagram into two parts depicts a major rift in local political relationships. While some political relationships, as say between village headmen, do not directly manifest this cleavage, in most, as say the chief with his subjects, though the Whites are not present in person, they are there in the context of the interaction. This will become evident as the analysis proceeds, but at this point it is sufficient to observe that the Whites and the White system of values are an integral part of the modern Tao political organization.

642
177
534
648

In addition to this, there is a hierarchy of status roughly conforming to the placing of the social personalities in the diagram, *i.e.*, the White Administrator is of higher status than the African Civil Service which is roughly on the same level as the chiefs, but both are on a higher status than the Native Authority's clerk and officials are. The lines represent the main direction of interaction.

648
563

1. *The White Administrator and the African Civil Service.*

By the White Administrator I mean the District Commissioner, Agricultural Officers and other Government officials who come into contact with the African population, particularly in the rural areas. The social distance between a White person in general and the Africans is much larger than that between, say, an African chief and his commoner subject. Social interaction on an intimate basis cannot take place between chief and Administrator mainly because their relationship is dominated by the pattern of all South African territories, where White does not interact intimately with Black. I have already stated that not many Europeans come into the area. Those Whites that do come into the area are immediately accorded the status of an Administrative Officer and are apt to be thought of as such, though they may not be so. The Tao clearly recognizes that the Labour Recruiter is a different sort of person from the Missionary and both differ from District Commissioners, but

648 563 nevertheless the type of behaviour which is normal between Labour Recruiter and African is dictated by the pattern of behaviour of Africans to Administrator. The Tao find it extremely difficult to separate out their attitudes to these different types of social personalities and the main reason is that they tend to categorise all White people into a general class "White" of which the most common representative to them is the Administrator.

647 648 It is, however, impossible to consider the Administrator without reference to the African Civil Service. I am using this phrase to mean those Africans who are in contact and direct interaction with the Administrator. I include the clerks, interpreters, messengers, policemen, and other intermediaries between the Administrator himself and the people. Probably of major importance is the interpreter who speaks directly to the people on behalf of the Administrator. In Southern Nyamland the official language is Nyanja and officials are expected to learn it for their official business. Some of the Tao men in the area under study can understand and speak Nyanja but some men cannot and certainly most women cannot do so. Therefore, the tendency is for the Administrator to make use of interpreters in dealings with the Tao and other peoples in the area. The Administrator do not interact directly with various social personalities but do so rather through either their own civil service or through the N.A.'s Bureaucracy who, being educated, are able to speak and understand the official language. The Administrator are in direct interaction with their own Civil Service and only in indirect interaction with the other social personalities in the political structure.

[191]

The African Civil Service stands for a set of White values and for this reason is placed in the "White Values" part of the diagram. The African Civil service represents the District Commissioner or Agricultural Officer to the tribesman. The Tax Clerk, while he is collecting taxes, is part of the system of the Administrator. The Agricultural Captain (African official) represents the Agricultural Officer to the villager when he interacts him in the building of contour ridges.

I [See p.152 — Analysis]

647 Therefore the African Civil Service has behind it the very powerful arc of sanctions of the Administration, both legal and eventually military, so that it is possible for a young Agricultural Demonstrator to resist a chief and be impertinent to him. The Demonstrator acting thus knows that he has the force of the White Administration behind him. He knows that he is able to report to the Agricultural Officer if the chief refuses to carry out instructions. The African Civil Service too, are outside the reach of the chief's power of punishment save where sanctioned by law. It was possible for a certain clerk of the District Commissioner while on tour, to sleep with the divorced wife of the chief—a thing which no village would have dared to do for fear of the wrath of the chief. The African Civil Service is also the correct channel of approach to an Administrator. Should a villager wish to see the District Commissioner he must first approach the messengers and interpreters before they are taken to the District Commissioner. The strong position of the African Civil Service in the situation is quite obvious.

648 The Administrator, through the mediation of his African Civil Service, interacts with the chief, the village headman, and the villager in different situations. Probably in all, the greater part of the Administrator's role of tribal Africans is spent in interaction with the chief. This interaction is conditioned by their respective positions in the political structure. The Administrator may discuss with the chief such things as the Treasury, the general food situation, the court cases, some unsatisfactory feature of the chief's administration. The Administrator may interact with village headmen in the same sort of way over specific points of common interest. The Agricultural Officer may approve the village headman for the existence of some model gardens in some of the village gardens, the District Commissioner upbraid him on the general state of disrepair in the village. Finally, the villager may approach the

648 District Commissioner on specific points. These points refer to some particular work of the Administration of which the District Commissioner is a representative. A villager may make enquiries about army gratuities, about tax exemptions, about the administration of estates of relatives who have died in Southern Rhodesia, etc. In general we may say that the interaction between the people on one hand and the Administration on the other takes place largely in terms of an overlapping field of interest, which the tribesmen see as a part of the White system of values but to which they do not fully subscribe.

2. *The Chiefs and their Bureaucracies*

643 The chiefs and their bureaucracies stand in
645 a peculiar position in the political structure.
648 They are, as it were, the bridge between the indigenous political machinery activated by a system of indigenous values, subscribed to by chief and commoner alike, and the White Administration on the other hand. To the people, the chief and his bureaucracy represent the White Administration to them since it is through this set of institutions that the regulations are administered. The N.A.'s bureaucracy collects the poll taxes,[1] dogs, guns, canoes, etc., supervises the construction of latrines, etc., and the chief punishes the people for breaches of regulations (not tax defaulters) which to the tribesmen are part of the White Administration. At the same time the chief is their representative to the District Commissioner and when the District Commissioner speaks to the chief he is in effect speaking to the people. From the point of view of the Administration he is in exactly the same interpreter position: he is both their representative to the people and the people's representative to the Administration. Accordingly the oblique line in the diagram passes through the rectangles marked 'chief' and N.A.'s Bureaucracy'.

The chief has lost many of the attributes of status that he had in the early days. No longer

643 645 648 649 651 643 649

does he monopolize the trade to the court. To-day the goods are brought in by Indian traders and are bought for cash by the African tobacco growers and the returned labour migrants. He can no longer use his slaves to increase his wealth by capturing yet other slaves. Nowadays his salary is insufficient for his own requirements and he can no longer make the gifts that he used to, to the village headmen and councillors. Councillors (i.e. the **whole** are necessarily officially recognized by the Administration) complain that, though they are not paid they nevertheless have to do much of the work that the District Commissioner expects the chief to do. The chief himself is generally too poor to pay them though some do in fact privately remunerate certain of their unrecognized councillors. The chief is still expected to give a burial cloth when an important headman dies, and to make a gift to a headman when he succeeds to a name, but his tribute of food and ivory has ceased. The people look upon the taxes they pay to the Administration and the licences that are paid to the chief's court as substitute for the chief's tribute. One informant explained that no longer is it necessary to send a pot of beer to the chief when beer is brewed, because nowadays a sixpenny licence must be taken out from the court for each brew for sale. He looked upon the licence (designed by the Administration as a measure to counteract excessive brewing and paid into the Native Treasury and not to the chief) as a modern substitute.

643 Nevertheless, it appears that the chiefs do manage to live at a higher standard than most of their subjects. They usually appear to be dressed more finely and seem to have larger wardrobes. Most have brick dwelling houses and rather more furniture than the average commoner. Nearly all have shot-guns and some have rifles. This is largely possible because the salaries are regularly paid even if they are low, and because many of the former obligations have fallen away. No longer do the chiefs entertain on so lavish a scale.

693
697 dation which the court messenger used to in past days. The secret channel of approach to the chief now is through the court messenger.

In most situations where the chief's orders are to be carried out, the various members of his bureaucracy execute them. For example, when the chief wants some duty to be performed by the villagers, it is the court messenger or messenger who goes to it. The messengers carry out the instructions and wishes of the chief to all parts of his territory. To the villagers, therefore, the N.A.'s bureaucracy represent the chief when acting as his agent but they also represent the White Administration because much of their interaction with the villagers is in terms of some regulations based upon White values. The court clerk who apprehends a villager and charges him with being in possession of an unlicensed dog is acting, in the eyes of the villagers, not so much as an agent of the chief, but rather as an agent of the chief representing the Administration. The territory inspector may explain to the man who has been charged with having no licence, "It is the law that you should have one", and by this he means the White law.

3. The Position of the Subordinate Native Authorities

693 I have not yet considered the position of the
697 S.N.A.'s in the structure. In the diagram they are represented as a separate hierarchical system. The reason why they have been represented thus, is because the S.N.A.'s regard themselves as autonomous units and in no way an integral part of the main hierarchical system under a chief. Each S.N.A. has his own sub-court and a small bureaucracy of his own. He sets up a replica of the situation under the chief. Each S.N.A. has the insignia of rank that the chief has; he is given the water greeting; wears the red band around his head; holds initiation ceremonies, etc. Each S.N.A. has the duty of making a sacrifice to the ancestors before and after the rains. A recent theft of a sacrificial cloth hung on a tree-shrine in a S.N.A.'s area was held to endanger the rainfall in that area alone. The chief in the area makes use of his position in the structure in relation to the Administration to bring pressure

3. [See p. 152. —Analyst]

to bear on his sub-chiefs. For example, when one sub-chief mishandled a prisoner, the chief did not feel himself to be in a position to reprimand the sub-chief. He reported the matter to the District Commissioner. Another had expressed displeasure at the conviviality of the sub-chief with an Ngoro man. He had given instructions that the one Ngoro with whom the sub-chief was on intimate terms, should be beaten if found together with the sub-chief again. The sub-chief merely recommended the ruling and nothing further was done about it. When one of the chiefs was to be given a medal by the Governor it was only with great difficulty that the sub-chiefs could be induced to attend the ceremony. One of the sub-chiefs said : "Why should my feet get sore walking to his capital ? He's getting the medal, not me". The Native Authority of his own account has not sufficient authority to reprimand a N.N.A. and where this must be done he must call in the District Commissioner to do it.

4. *The Village Headmen and the Villages*

A District Commissioner once referred to the village headmen as "the hard-worked of the political system—doing all the work and getting all the kicks". This description is an illuminating one. The population in the area is distributed in hamlets of mainly matrilineal kinsmen (usually composed of a man and his female matrilineal relatives and spouses (see p. 142). The male leader of this group I call a village headman but this should not be confused with the social personality here called the Administrative village headman. For purposes of the Administration, villages and hamlets are grouped under officially recognized and remunerated village headmen. Administrative village headmen usually have some local standing. Some have the right to wear the red band which distinguishes rank, some have the right to conduct initiation ceremonies for both boys and girls, they are all given the greeting accorded for people of some rank, they are referred to by a term which signifies both the chief and the village headman (*mwanye*).

The administrative village headman has certain duties which he must perform in respect of his

10: Barnes E-5 (1946-1949) 1959
FRS Ngoni FRS
Mpezeni
Yao FT7

The Yao are mistrusted more than any other tribe, and some of the decisions taken by the courts are harsh on Yao. For example, a Yao man who was married to an Ngoni woman had, it was alleged, caught venereal disease from his wife. His wife then applied to the courts for a divorce, which was granted, together with the custody of the children. No bride-wealth had been paid in the marriage, but the husband now offered to pay in order to retain the children. This bride-wealth was refused by the woman's parents. The Yao appealed, but the judgement was upheld, and in addition he was ordered to go back to Nyasaland at once. He asked for permission to return to the woman's village in order to collect his belongings, and this was granted by the court, after first securing agreement between the couple as to the extent of his possessions, to wit, four plates and two beds. This deportation order was made despite the fact that the Yao had been living with his wife for twenty-one years. If a man of some other tribe had been involved, it is unlikely that he would have been ordered to leave the country, nor would the court have been so emphatic of his trying to take away more than his rightful share of the household possessions.

A Yao, who had a good job in Fort Jameson, once offered you to the Paramount Chief when he was in the town as the legislation payment for a woman of the royal lineage whom he wished to marry. The Paramount Chief refused the money on the ground that the man was a Yao and he was not going to permit Yao to marry into the royal lineage, despite the present of one of his lieutenants that the Yao was just a man like anyone else.

The reason that is given for this dislike of Yao is that they are usually very virile, due to the medicines that they possess for increasing potency. It is perhaps significant that the same is said of Indians, who are also disliked. The Yao are known among the Ngoni for their great knowledge of medicines of all kinds, and the allegation of venereal sexual vigour may be a rationalisation of the fear that the Yao may practise sorcery among the families into which they marry. Another factor that may operate is that the Yao are the only tribe in the region that the Ngoni cannot claim to have conquered.

Political Relations with Other Tribes

Before the European conquest relations between the Ngoni and other tribes were principally those of raiders and raided. The great season for raiding was after the harvest, when the surrounding tribes

1: Tew E-4 (no date) 1950 FT7 Yao FT7

office tended to become hereditary. Each councillor had his own village which he administered as a headman. A second set of officials were the court assessors, *mayanga*, who, unlike the councillors, were not in charge of villages of their own in addition to their court duties. Their office was not hereditary and they were chosen for their wisdom and their debating ability. They lived at the court of the chief and their main duty was to sift the evidence in the judicial cases which came before him.

The village headmen were expected to send elephant tusks to the chief (receiving small gifts in return), and to invite him to a yearly beer drink. Like the chief, the village headman governed through a council of the most important men in his village. They constituted a kind of village court over which he presided, and in the old days he could give capital sentence, or award a fine of as many as four slaves. Appeal from his decision lay to the court of the superior headman, or to the chief. Important cases would be reported direct to the chief. Most crimes would be settled by compensation. In cases of murder, several slaves were paid to the kin of the victim, and a fine for spilling blood to the chief. When compensation was handed over, the recipient always returned some part of it as sign that friendship was restored.[1]

Macdonald's further account of the treatment of crime shows how weak was the political organization, in spite of the apparent orderliness of the system of inferior and superior courts. A murderer caught red-handed might be killed at once. If captured alive he might be ransomed on payment of a fine of from four to twenty slaves, some of whom might be killed to accompany the dead. If the murderer escaped a relative of his would be captured and ransomed. This applied to murders occurring among parties friendly to one another and living in the same village. If the murderer was from another village, the injured village, if strong enough, would fall upon the other and kill and enslave the inhabitants. If not strong enough, the chief might be called in to help to annihilate the guilty village.[2]

Modern Administration

In the whole of Nyasaland there must be between thirty and forty Yao chiefs. In the districts of Liwonde, Fort Johnston, and Zomba, where 80 per cent. of the Yao population is concentrated (1931 boundaries), there are at least fifteen such chiefs. Not all those who have the rank of chief in the old Yao system are recognized as Native Authorities or even as Sub-Native Authorities by the Nyasaland Administration, and many Sub-Native Authorities would be full chiefs in the Yao system, and quite independent of the Native Authorities under whom they are placed.

Nowadays the chief has lost many of his former claims to status. He no longer has monopoly of the trade to the coast, for goods are brought in by Indian traders and bought by African tobacco growers or returned labour migrants. He can no longer use his slaves to increase his wealth by running slaving expeditions. His tribute of food and ivory has ceased, and he can no longer entertain lavishly, but he is still expected to give burial cloths and to make gifts to headmen on their accession to office. Some of his councillors have been made court assessors, and are paid for these duties, but others are expected to work for him unpaid. Some chiefs do reward councillors who retain their traditional status but are not officially recognized as assessors by the

[1] Macdonald, *Africa*, vol. i, pp. 136-8; Freeman, *o. cit.*, p. 179.
[2] Macdonald, *op. cit.*, pp. 139-1.

2: Mitchell E-5 (1946-1949) 1956 FT7 Yao FT7

936 calico currency was an impossibility.'[1] The Africans could hardly have resisted the change over to a money economy. The taxation system introduced in 1893 was based on the Governor of 936 Zululand's Proclamation III of 1887, and ruled that a tax defaulter 651 was liable to be conscripted for labour until he had earned the 687 amount of his tax. Coffee estates owned by Whites in the Highlands were at the same time in need of labour.[2] Tax was then taken in kind but it was soon changed to cash as a further inducement to Africans to come on to the labour market. The Africans were forced into the cash economy of the Protectorate even if they were unwilling. The measures were so successful that in 1899 the *Gazette* announced that the labour market in Blantyre was flooded.[3]

Modern Economic Structure

177 In modern Nyasaland, the wants of the Africans have become 911 even more varied than they were in the earlier days. Most younger men wear European-type clothing and shoes. Many own bicycles and sewing machines. Many houses have glass windows and panelled doors and most of them are furnished with some rough furniture which has been bought from local craftsmen. Many have beds and mosquito nets. Few women cannot boast of enamel dishes to replace their clay pottery or china cups to replace drinking gourds. The food habits of the peoples too have broadened. Most households use sugar these days, and many people drink tea. I should say that all households occasionally buy soap. Certainly all need salt, which formerly was burnt from the saline grass around Lake Shirwa or dissolved out of special soils in Portuguese East Africa. The stock-lists of an Indian-owned village shop in Chiwalo's area and of an African-owned canteen in the same area, which I have set out in Appendix A, indicate the range of the wants of the modern African.

934 It is clear that these wants are over and above food require- 935 ments. The people in these tribal areas live primarily on the

[1] *Report of the Consul and Acting Commissioner Sharpe on the Trade and General Condition of the British Central African Protectorate for April 1896 to March 1897.* C. 8258.

[2] See the *B.C.A. Gazette*, iii, 3 (March 1897), and iii, 17 (Sept. 15th, 1898), which print advertisements offering 'native labour arranged for and supplied to plantations at a commission of 7s. 6d. a head'.

[3] *B.C.A. Gazette*, vi, 6 (June 24th, 1899).

2: Mitchell E-5 (1946-1949) 1956 FT7 Yao FT7

175 565 622 643

2. Free men are under their elder brother in the first instance, but they may carry their cases to the headman of their village or even to the chief of the country.
3. Slaves were entirely under their own master.[1]

The headmen's subservience to the chief is described in the following passage:

In all public transactions the headman represents his village. He receives the chief's orders and sees them carried out. When he kills an elephant he sends one of the tusks to the chief. Should he kill twenty elephants he is not expected to give up twenty tusks—two or three would be sufficient. If he shoots a large buck he gives one haunch of venison. For all such tributes he expects to receive in return a present (generally a little powder). . . . He is expected to attend the chief's parliaments unless he is under an elder brother in which case he is not allowed to speak, except when especially commissioned. Headmen are expected to report all cases of war, but they often attack enemies without telling their chief beforehand, saying, 'Let him hear of the enterprise when it succeeds.' Yet this is dangerous unless they are sure of success, and well acquainted with the chief's private sentiments. On reporting an attack they present the chief with part of the booty. In times of war each headman when summoned, must follow his chief's flag, otherwise his village is burned down, and all that fail to escape are killed or enslaved.[2]

[651] [646 913] [721] [48]

175 578 622 643

Yet within the framework of this organization villages were markedly autonomous. MacDonald's description, which I have just quoted, brings this out very well. Elsewhere he writes: 'The chief may often have less influence than powerful headmen, and we have known cases where he simply contented himself with grumbling when his headmen acted contrary to his desire.'[3] The chief did not differ greatly from his more powerful headmen. A certain amount of ritual in terms of ancestor worship embellished his position, and he had some ascendancy over village headmen to whom he had given land. Yet, in the last analysis, the chief had to rely on his personal following and military power to subjugate headmen who were becoming too powerful. The chief was therefore in direct competition with his subject village headmen, and involved in a constant struggle with them for followers. MacDonald describes how the chief himself was a

[1] MacDonald, *Africana*, i. 133.
[2] MacDonald, *Africana*, i. 133.
[3] MacDonald, *Africana*, i. 133.

2: Mitchell E-5 (1946-1949) 1956 FT7 Yao FT7

of the ancestors of the chief are supposed to affect the welfare of the initiands. Though some village headmen may conduct initiation ceremonies they are unable to offer rain-prayers. These are offered by a chief on two occasions. The first is in November, before the rains have started. The chief's wife and some women from the bigger villages in the near vicinity of the chief's village gather at his hut. They brew beer—*ukuse wuziuka*, the beer of the spirits—to be used as a libation. At sunset on the appointed day the chief goes to the shrine tree where some headmen have gathered, and pours some of the beer into a pot, partly buried at the root of the tree, while he invokes all the spirits of his departed ancestors—mainly matrilineal but occasionally some patrilateral. He then entreats the spirits to send some rain and to look after their 'children' in the land. Sometimes a length of calico is hung on the tree as an extra offering. Should no rain fall the chief will have to repeat the offering until it does fall. When the rains have ended in March he makes a second offering 'of thanks'.

In the context of the present discussion, the important point is that it is only the chief who can make this libation and offer this prayer. If his plea fails the whole area starves, and no headman may supplicate his ancestors on his own behalf or approach the chief's ancestors through his own ancestors. The grain for the beer comes from the various villages, but not on a fixed rate of levy. Some villages never contribute. The chief buys the offered cloth on behalf of his people. When in 1948 the cloth on the shrine tree was stolen, Chiwale imposed a levy on the village headmen in the area so that a new cloth could be bought. Here the boundaries of the chiefdoms are important, and no headman outside Chiwale's area was approached. A village headman from Jalasi's area, though geographically much closer to Chiwale, relies on Jalasi's rain-offerings and may not approach Chiwale or plead with him to offer a rain-prayer to his ancestors.

Another ritual situation in which the limits of the chiefdom appear is during the institutionalized pillage on the death of a chief. I have not been in any area when the chief has died, so that I only have on the rules of informants. During the mourning rites certain feasts are held. The food for the mourning feast of a commoner or village headman is provided from his own

2: Mitchell E-5 (1946-1949) 1956 FT7 Yao FT7

villages, however, the headman's activities may be as circumscribed by ritual prohibitions as the chief's are.

The village headman is subject not only to mystical dangers but also to other dangers deriving from his position of authority. It is significant that villagers never go to a diviner to find out the cause of a village headman's death. When I asked informants why this was so, they said, 'Well, what's the use of it? He has enemies on all sides in the village who are trying to kill him with their magic.' In harmony with this view of village headmanship, the symbolic object which represents the village headman in the diviners' gourds I have seen, is a small ring of grass (*singwe*), a copy of the grass cushion women place on their heads when they are carrying loads. This symbolizes the ring of enemies which surrounds the village headman. The saying 'the carrying deferences on the one who carries it',[1] usually applied to chieftainship, applies equally well to a village headman.

A village headman may expect little material benefit from his position of authority. If he is an Administrative village headman he may be paid a small annuity of 5*s.* or 10*s.*[2] Returning labour migrants may give him a blanket or a military overcoat, or perhaps a few shillings, but this is not usual. If he is not a strict Moslem he will almost certainly be given a pot of beer from every brewing made for sale in the local '*chib house*'. On the other hand, if an important stranger, particularly a White official, arrives in the village he feels he must give his guest a chicken. It is manifestly to reciprocate with another gift, but not all Whites know this, or, if they do, do not observe it. In particular if the chief comes to his village, he will be expected to entertain him and here can expect no recompense—the chief 'eats from his country'.

The Yao know that the position of headman is no sinecure. Frequently the one chosen to succeed refuses to accept the position, especially if he is well placed in employment. It is significant that the word for an heir is *lingwe*[3]—the one who is trapped. An

[1] Nyasa *jilungulu ungwe tunjipili*.

[2] Until recently this was zero. As I was leaving the field in 1949 I heard that the Administration had decided to abandon this system in favour of one in which only group headmen would be remunerated.

[3] Infinitive form of the passive of the verb *lunga*—to set a trap or for animals. This word is not widely known, especially among the younger Yao.

II. THE POLITICAL STRUCTURE BEFORE THE WHITES CAME

(73) (Sukwanda Sabangada), i.e. to surrender to the chief
(63) in the area. Also the chief sent out expeditions
(67) to capture slaves or he purchased slaves with the cloth and beads he had exchanged for ivory at the East coast.

(68) Within his territory certain privileges and rights
(92) were held by the chief and he had certain religious duties to perform in which the unity of the people in the territory was expressed. In general the chief had rights over any ivory either found or hunted in his territory. If a dead elephant were found the tusks belonged to the chief, though he usually rewarded the finder with cloth. If a man killed an elephant the tusk that lay on
(64) the ground belonged to the chief while the other belonged to the killer. The killer's tusk was in-
(67) cluded in the chief's caravan to the coast and its value paid in cloth to the killer when the caravan returned.

(68) The chief was also entitled to an annual tribute
(65) of food and beer from all villages in his area, but this was used to entertain visitors who came to the main village.

(68) The chief's religious duties lay mainly in
(72) propitiating the spirits of his ancestors on occasions when the community at large, in contrast to the chief's own private affairs, was either threatened or directly affected. The most obvious occasion was immediately before the rains came when flour was poured on the tree shrine and the spirits of the ancestors asked for good rains. Later when the rains were over a similar sacrifice was made asking for a good harvest. Sacrifices to the ancestors were also made on two other public occasions. They were made when some calamity had occurred or was believed to be impending. A run of unsuccessful campaigns induced Cingwalagwalo, a son of the Tua chief Mpondo near Fort Johnston, to ask his father's father's brother to make sacri-

643 does he monopolise the trade to the court. To-
645 day the goods are brought in by Indian traders
648 and are bought for cash by the African tobacco
growers and the returned labour migrants.
He can no longer use his slaves to increase his
wealth by capturing yet other slaves. Nowadays
his salary is insufficient for his own requirements
and he can no longer make the gifts that he used
to, to the village headmen and councillors.
Councillors (*i.e.* the **sabas** not necessarily offi-
cially recognized by the Administration) complain
that though they are not paid they nevertheless
have to do much of the work that the District
Commissioner expects the chief to do. The
chief himself is generally too poor to pay them
though some do in fact privately remunerate
certain of their unrecognized councillors. The
643 chief is still expected to give a burial cloth
649 when an important headman dies, and to make
a gift to a headman when he succeeds to a name,
651 but his tribute of food and ivory has ceased.
The people look upon the taxes they pay to the
Administration and the licences that are paid
to the chief's court as substitutes for the chief's
tribute. One informant explained that no longer
is it necessary to send a pot of beer to the chief
when beer is brewed, because nowadays a company
licence must be taken out from the court for each
brew for sale. He looked upon the licence (de-
signed by the Administration as a measure to
encourage economy brewing and paid into the Native
Treasury and not to the chief) as a modern sub-
stitute.

643 Nevertheless, it appears that the chiefs do
manage to live at a higher standard than most
of their subjects. They usually appear to be dressed
more freely and seem to have larger wardrobes.
Most have brick dwelling houses and rather more
furniture than the average commoner. Nearly
all have shot-guns and some have rifles. This
is largely possible because the salaries are regularly
paid even if they are low, and because many of
the former obligations have fallen away. No longer
do the chiefs maintain as so lavish a scale.

1: Yaw E-4 (no date) 1950 FT7 Yao FT7

passed. Two contingents of Sikhs were sent unsuccessfully to take Kawinga's fortress in Chikala in 1894; Makanjira was defeated in 1894, Kawinga, Jalasi, Mariyawi, and Tambala in 1896.[1] They were later allowed to settle; but they were not recognized as chiefs by the Administration.

The end of tribal wars and of slave-raids made large defensive settlements unnecessary, and the power saw the splitting up of communities, which rendered the task of the Administration more difficult. The abolition of domestic slavery, by reducing the power of headmen, further contributed to the tendency to live in small scattered settlements. In 1912 the Nyasaland District Administration Ordinance was passed with the object of concentrating the villages into larger communities.

The first movement of Yao from Portuguese East Africa to Mwani took place about the end of the 1850's. According to one account they were originally expelled from the territory between Matuko's and Unango by the Mwako Ngoni.[2] Then the Makua attacked them, breaking up the tribe still more, so that they migrated north to Mwani, the south-west of the Makonde plateau, and the banks of the lower Rovuma. At Mwani they were again attacked by Ngoni, but defeated them, and then retired to the Makonde plateau, where they were again attacked by Ngoni. There is a tradition that at some time after 1850 the region was toured by an emissary of the Sultan of Zanzibar, 'Bakiri', who gave the whole country to Mataka, a Yao chief, to rule from Newala. In the area between Mwani and the Rovuma river the Yao are in a majority and politically supreme over their neighbours the Makonde, Makua, Ngindo, Matumbwe, and Ndendeule.[3] At Mtwara, on the Makonde plateau, there is a settlement of Yao who were rescued from the Ngoni on the east shore of Lake Nyasa by Captain Engelhardt, and transferred there. These in outward appearance could hardly be distinguished from the Swahili of the coast.[4]

DEMOGRAPHY

The Yao population of Nyasaland has increased steadily but its relation to the total population has not increased:

1901		1931		1951	
Yao population	Percentage of total population	Yao population	Percentage of total population	Yao population	Percentage of total population
[illegible]	[illegible]	[illegible]	[illegible]	[illegible]	[illegible]

Even in the predominantly Yao areas the population is not homogeneous, either tribally or linguistically. In the three areas in which there are a large number of Yao (Kawinga and Liwonde of Zomba district and Nyambi of Fort Johnston), they represent roughly 48·6, 75, and 73 per cent. of the total population, the sixth most important section being Ngoni (Lomwe) immigrants from Portuguese East Africa.[5] Some Ngoni still characterize Yao when questioned.

The density in these areas is respectively 63·5, 31, and 52 per square mile.[6] The

[1] Cunningham, 1898, p. 400; Monteiro, n. 1904, pp. 88, 100-6, 130-1; Sidney, 1899, p. 400.
[2] Lyongwe, 1899, p. 30.
[3] Wade, 1904, pp. 108-48.
[4] Bell, p. 48.
[5] Mitchell and Greene, 1948, 1951, and 1952.
[6] 1952 Census.

2: Mitchell E-5 (1946-1949) 1956 FT7 Yao FT7

of the ancestors of the chief are supposed to affect the welfare of the initiands. Though some village headmen may conduct initiation ceremonies they are unable to offer rain-prayers. These are offered by a chief on two occasions. The first is in November, before the rains have started. The chief's wife and some women from the bigger villages in the near vicinity of the chief's village gather at his hut. They brew beer—*ukasa wacinka*, the beer of the spirits—to be used as a libation. At sunset on the appointed day the chief goes to the divine tree where some headmen have gathered, and pours some of the beer into a pot, partly buried at the root of the tree, while he invokes all the spirits of his departed ancestors—mainly matrilineal but occasionally some patrilineal. He then entreats the spirits to send some rain and to look after their 'children' in the land. Sometimes a length of calico is hung on the tree as an extra offering. Should no rain fall the chief will have to repeat the offering until it does fall. When the rains have ended in March he makes a second offering 'of thanks'.

In the context of the present discussion, the important point is that it is only the chief who can make this libation and offer this prayer. If his plea fails the whole area starves, and no headman may supplicate his ancestors on his own behalf or approach the chief's ancestors through his own ancestors. The grain for the beer comes from the various villages, but not on a fixed rate of levy. Some villages never contribute. The chief buys the offered cloth on behalf of his people. When in 1948 the cloth on the divine tree was stolen, Chiwale imposed a levy on the village headmen in the area so that a new cloth could be bought. Here the boundaries of the chiefdoms are important, and no headman outside Chiwale's area was approached. A village headman from Jalasi's area, though geographically much closer to Chiwale, refers on Jalasi's rain-offerings and may not approach Chiwale or plead with him to offer a rain-prayer to his ancestors.

Another ritual situation in which the limits of the chiefdom appear is during the institutionalized pillage on the death of a chief. I have not been in any area when the chief has died, so that I only have on the rules of informants. During the mourning rites certain foods are held. The food for the mourning feast of a commoner or village headman is provided from his estate

2: Mitchell E-5 (1946-1949) 1956 FT7 Yao FT7

by his relatives. For the feasts during the mourning at a chief's death the food is acquired by institutionalized pillage (*cipisinde*). The villagers in a chiefdom are often first informed of the death of a chief by the appearance of men from his village. These men are by custom allowed to take from a village any article of food they can find—flour, a goat, some chickens, prepared relish, or whatever is lying around in the village. The owners of the food may not charge them with theft. This food is used in the funeral feast. The excesses to which the chief's men may go became circumscribed after the White conquest. Previously, almost any crime short of murder could be committed under the guise of *cipisinde*. More recently, owing to Government opposition, it has been restricted to the taking of smaller articles of food, such as flour and chickens. Some people are beginning to object even to this. The chief's funeral is a public affair and all his subjects may attend it. The effect of the *cipisinde* is to bring together enough food for the chief's funeral feast. Here, as before, the chief's men may not cross the boundary for fear of reprisals, and the effect is to impose a levy in an informal way over most of the villages in the chief's area.

The Chief as a Symbol of Unity

The chief is a representative of his people and it is his particular duty to ensure their welfare and that of the chiefdom as a whole. His symbolic representation of the unity of his people is brought out clearly by his right to fines in cases involving bloodshed and arson. Strife and division in a chiefdom in the old days were likely to end in spilt blood and burnt huts so that the Yao associate bloodshed and hut-burning with dissension within the chiefdom.

Most other offences are against the individual and not the chiefdom as a whole: the case is brought to the chief so that compensation may be awarded. Adultery and theft thus are definitely civil offences. Nowadays, a fine is imposed, but this is seen to be a White innovation, and the money from it is looked upon as 'Boma' money.[5] In disputes where blood has been shed, however, the chief is entitled to fine the guilty party on his own account. The chief is said to be 'blinded' by the blood and a payment must be made to him before he may 'see'

[5] i.e. Government money.

2: Mitchell E-5 (1946-1949) 1956 FT7 Yao FT7

175 622 641 645 whatsoever. But a man often decamps by night taking with him many dawa belonging to his fellow-citizens; he then goes to some influential chief who may be only too glad to give the fugitive ground and to establish him as a sub-chief. Peoples who thus have are devoured by their former chief, who welcomes every opportunity of discovering or capturing them.[1]

175 559 622 645 648 In this way village headmen, by increasing their following, increased their power against the chief. MacDonald records:

> While a person has acquired several villages, he becomes a higher headman, intermediate between the chief and the owner of a single village. Each headman lives in the village he likes best, and leaves his 'brothers' to manage his other villages. But a headman of great ambition often places his 'brothers' all around him, decides their cases, and practically governs a small kingdom of his own. If he lives far from his chief, one might suppose that he was quite independent. Where a quarrel arises between the chief of the country and an important headman, the latter may rebel, and found a new kingdom, thus depriving the old chief perhaps of one-third of the villages in his dominion.[2]

MacDonald cites the case of Mkanda of Chirulundu, who was at first a headman of Kuhlpunu's but rebelled, and went to live on the southern side of the mountain.[3] He also observes that on the other hand, 'a headman may keep up his chief's authority in a district that the latter could not otherwise hold'.[4] Elsewhere he says:

> In and around his own village the chief of the country is a terrible power, and his government is supported by the most prompt and severe punishments. But in distant parts of his dominions, where influential headmen live, he may be little known, although as a matter of theory he is supposed to settle all graver disputes even in remote villages.[5]

175 645 The history of the Yao chieftaincies in MacDonald's time, and as told to me by my informants, is that of constant division into independent chieftdoms. In the Zulu and Bemba polities a strong state structure included a pattern of civil war and the main-

[1] MacDonald, *Africana*, i. 157-8.
[2] MacDonald, *Africana*, i. 32.
[3] MacDonald, *Africana*, i. 177.
[4] MacDonald, *Africana*, i. 176-7.
[5] MacDonald, *Africana*, i. 134-5.

2: Mitchell E-5 (1946-1949) 1956 FT7 Yao FT7

175 622 is his relatives that are the village gods. Everyone that lives in the village recognizes these gods but if anyone removes to another village he changes his gods. He now recognizes the gods of his new chief. One wishing to pray to the god (or gods) of any village naturally desires to have his prayers presented through the village chief, because the latter is nearly related to the village god, and may be expected to be better listened to than a stranger.[1]

In this quotation the word 'chief' is used for village headman. In Yao the same term is used for both the chief of the country and the chief of the village (*mwenye*).

175 622 681 691 It is clear from MacDonald's description that foreign villages were looked upon as undifferentiated wholes. When discussing punishment in general he writes:

We find that almost every offence may be punished by death, but when an offender is not referred, the particular punishment is left to the headman of the injured party. For instance, if a headman of Kumpuma's go and say, 'Chenyoso has killed a subject of mine; I have caught a subject of his and want to kill him,' the chief's answer will be, 'He has done you wrong, do according to your heart (*poli mtima wenu*).' The punishment is thus inflicted not by the criminal's own chief, but by the injured party, and it may fall, not on the guilty person, but on one connected with him.[2]

For example, he describes how some children had been carried off from Che Lomoni's village one night in 1880.

Towards the end of 1880 [he recounts], Che Lomoni, a Blantyre headman, captured two men from Mpingwi, and put them in slave-sticks. They belonged to the village that had kidnapped the children a few months before, and native law did not require proof that the men were personally guilty. They were undoubtedly innocent. Still they were kept in close confinement till their friends returned the captives in February.[3]

175 622 The village headman—called the 'owner of the village' (*anyene mzi*)—was the representative of the village in all public transactions, and also the representative of such higher authority as existed, to the village members. Duff MacDonald writes: 'A chief represents and is responsible for all his people. If anyone wish to treat with a native village it is with the village

[1] MacDonald, *Africana*, i, 65.
[2] MacDonald, *Africana*, i, 186. [3] MacDonald, *Africana*, ii, 234.

2: Mitchell E-5 (1946-1949) 1956 FT7 Tao FT7

again. In the past, disputes hinging on murder had this aspect, though they were usually settled by a feud. Nowadays, of course, all murder cases are lifted altogether out of the hands of the chief, but the special fine for bloodshed is still levied in cases of assault. When a man is convicted of assault in the chief's court he will have to pay three separate amounts: one to the victim as compensation, one as a fine to the Native Treasury, and one to the chief 'so that he may see again'.

A similar provision applies to cases of arson. When a case is brought to the chief because a man has burnt another's hut, the chief will say that the guilty man has 'brought a torch into his country'. The man convicted of arson will have to pay a special fine to the chief in the same way as the man who caused bloodshed. The association of the unity of the chiefdom with fire probably has some place in the attitude of the chief here. People who have come to a chiefdom as strangers are said to have come to 'seek the chief's fire',[3] and all the fires in the chiefdom are supposed to have been kindled from one flame. This expresses the unity of the chiefdom: the burning of the hut, therefore, symbolizes the introduction of discordant elements, as well as being a serious crime in itself.

The Chief's Judicial Functions

It is clear from MacDonald's writings that in pre-White days the chief settled most of the serious disputes in his chiefdom. Nowadays, this function of the chief has been given legal sanction under the Native Courts' Ordinance of 1933. 'A' grade courts have the power of imposing fines not exceeding £5, or 6 months' imprisonment and 12 strokes whipping; and 'B' grade courts may impose fines not exceeding £1 and imprisonment including hard labour not exceeding one month, but not corporal punishment. The Native Authorities, Jalasi, Nyambi, Kawinga and Liwonde, all have 'A' courts; the Subordinate Native Authorities, Chikwo, Ngokwe, Chiwalo, Chamba, Mposa, Mlomba, Stora, h[illegible] 'B' courts. Only a certain proportion of disputes is brought to trial in these Native Authority courts. This is because, firstly, the Administration does not admit the legality of some disputes. Most of these centre on charges of witchcraft,

[3] A similar view of fire in the village context is discussed in Chap. V, p. 112.

2: Mitchell E-5 (1946-1949) 1956 ??? Yao ???

692 but some also on having killed children by *ndoka*[1] (a disease
[693 caused by the mystical influence of sexual intercourse). Secondly, other cases not brought to the court are petty squabbles which do not involve heavy compensation. Examples of these disputes are personal quarrels, disputes over land ownership, petty theft and so on. The Native Authority's court handles mainly cases arising from adultery, which involve compensation varying from £1 10s. to £5; and theft and assault for which similar compensation may be payable. If the case is brought up to the
694 chief's court there is a mechanism whereby the compensation may be enforced. Ordinarily, in those cases which are not tried in the court house, there is no legal sanction behind the payment of the compensation, so that if a man defaults in payment no legal pressure can be brought to bear on him. It is for this reason that such cases are tried in the court house.

695 The cases are heard by the court assessors who call the wit-
693 nesses and cross-examine them. Sometimes a chief or his representative is in the court, as at Kawinga's court, but sometimes as in Chiwalo's court, the chief never comes to the court house at all. After the evidence is sifted, one court assessor takes the case to the chief and tells him about it. On the basis of the court assessor's analysis he awards compensation and imposes fines. The court assessor then takes this information back to the court house, reassembles the protagonists, and announces the chief's decision. The losing party has then the opportunity to appeal, first to the court of the Native Authority, if the case was tried in a Subordinate Native Authority's court, and then to the District Commissioner.

Cases tried by the chief in his extra-Administrative capacity are usually tried outside the court house. The same personalities take part in the trial but they act now with reference to a different set of values. The procedure is exactly the same, except that in Chiwalo's area the chief is present at the hearing. He sits somewhat aside from the main body of people but within hearing distance, weaving a mat or making nets while the case is being tried.

692 In minor cases, if either of the parties is dissatisfied with the
643 decision, he may take the case up to the chief for arbitration and, theoretically, may then take it from him if he is a Subordinate

[1] See Chap. V, p. 112.

Taking advantage of the natural inquisitiveness of people, a favorite trick for making money is for a man to appear in a village making pretence of having a peep-show, something mentioned in a natural basket or in a cloth. On payment of some small amount, the people is allowed to peep in, maybe only to see a dead mouse; finding he had been "done," he of course bursts out laughing and, anxious that all his companions should also be "done," he does not "give it away" and so the peep-show man makes quite a good living.

The girls play with dolls of two kinds, *Ulele*, made from little gourd-like fruits called *Ulanga*, and others called *mwanaka*, "a child," made from maize cobs. These dolls they carry about on their backs as mothers do their children. *Ulele* is made of three of these little spherical fruits glued together with beeswax; on the one which represents the head, wool, red and blue, of the *ulangaga* tree are mounted in rows to represent hair, and often beads, as in the suburbs method of hair-dressing. One saw similar dolls made for the children of other tribes. Thus, among Monteiro's Angoni, a doll called *mwanaka*, "a child," is made in a dumb-bell form of two small spherical gourds joined by a bundle of sticks bound together with string and wax; on the head-piece string is mounted to represent hair. Their children also play with little clay images of cattle and cows, a custom they have preserved from their old Zulu ancestors but foreign to the Yao. The Ankonde children have carved wooden dolls not seen in any other tribe. *Mwanaka* is made from a maize cob by shedding the papery coverings of the cob; on these shreds are threaded white and red varieties of maize to represent beads, or the shreds are plaited into a number of tags to represent hair.

Lastly, the children have taken to making hoops and show considerable skill in driving them with a piece of bent cane (Pl. XXIII, fig. 2), while the older boys make two-wheeled representations of bicycles with a very clever imitation of all the parts of the machine.

The whipping-top, *mwapipo* or *mwapwapo* (*mpuki*, Chin.), is found among the boys' toys. It is made of a conical piece of wood with a flat top and no metal peg. It is started spinning by pulling off the string wound round the top. The whip consists of a piece of string fastened to the end of a stick. Sometimes tops of large size are used, and two boys whip them from opposite sides (Pl. XXII, fig. 4).

A game called *ukipate* is played by youths; it takes its name from *ku-pata*, to strike, and refers to the action of striking with a finger the hand in which a bean is ground to be. A spiral is drawn with the finger in the sand with a central point to represent a village, and a tail piece prolonged on one side to a second point which represents a slave-market on the coast. Along the line, a number of other points are demarcated to represent sleeping places en route. At the village, two white beans are put to represent the two players and with each is a smaller brown bean to represent his slave. At the slave-market are placed a variety of beans to represent trade-goods, cotton, beads, etc. Each of the two players in turn shakes a single bean in his closed hands and then shows the hands, separating them at the

643 bravery by his own hunting parties or as a kind of tribe on other hunting expeditions. The ground tusk, i.e. the tusk on the side on which the elephant falls when killed, was the chief's share. In the same way, the hind leg on the ground side of any game animal killed was sent to the chief. He took a share of the spoils of war and most of his people yearly gave him either service in building houses, etc., or kind in the form of foodstuffs, but he enforced no service and levied no tax, except for the making of a new burial place.[1] Now settlers in his village were expected to invite him to drink beer made with their first crops.

In return, he always provided cloth to invest the body of the dead. He also made presents at the time of Ukuqaqa.[2]

A chief's life, therefore, may not be "all beer and skittles," though he consumes a good deal of the former and a kind of skittles[3] was a favorite pastime of one of the Mabuwyas. A saying embodying this idea was used when pleading for a man who had

[538] committed adultery with his chief's wife "one who carries a hatchet (on a string over his back) is likely to get his skulls split"; a man has to put up with the troubles his belongings bring him. So a chief must bear with his own people who do wrong.

643 Ample opportunity for consulting with Indunamen was provided, since the chief was

642 formerly the adjudicator of all disputes and dispenser of justice in all crimes. The headmen did the same in a smaller way but appeal would always be made to the chief. Cases were heard by the chief sitting in council. He and his headmen and elders would assemble in the village open space and here cases were stated, often at great length.

Each party to the case would employ some man well known for his powers of oratory as leading counsel. The speaker for the plaintiff would start proceedings by a recital of all the evidence he could collect. After him would follow innumerable speakers, whether actual witnesses or not, each telling as good a story as he could, and the defendant's case would then be put by his representatives. There was no cross-examination but at the end, a summary was made and judgment given. A chief often took the advice of some one of his old men whom he trusted.[4] The chief received no payment for his services, except in the case of murder; neither did the "counsel" receive anything for their efforts.

674 **Crimes.** Causing the death of a person by witch medicine, sorcery, was the most heinous

[559] crime; a sorcerer ordeal might be held, but if the offence was proved, burning was the punishment which usually followed.

[649] The offence second in gravity was adultery. This might be expiated by payment or by death, according to the circumstances under which it occurred; mutilation was often

[644] performed in the case of a chief's wife. All death sentences with the exception of those

[1] Vide supra, p. 266. [2] Vide supra, pp. 240, 266. [3] Vide infra, p. 280.

[4] The old Mabuwyas (Makomashe) has some very fine men among his counselors. Kwatuqa and Chiqula, the latter renowned for his oratory, were his chief advisers in legal matters. Ndabaka, a slave, was his master in all personal and family affairs, while Cinkwanqa was in charge of all ceremonies and served with his assistant, Mpunde, as high priest on all occasions of intercession. Others acted as his counselors, such as Mbuqiti who always went on any mission to the Ingwe, among whom he was known as Ndanjiza.

for wishbeath were carried out by struggling with a piece of rubber on a place appointed for the purpose some miles from the chief's village. [574] [575]

There was no case against a man who seduced an unmarried girl, the latter being considered entirely at fault. [576]

After divorce, the children always remained with the mother. The man left his wife after the case, saying, "I will take my spear and some of the guns and chickens, but the children will always know their father." [577]

Murder was a question of compensation to the deceased's relatives and was not punished by death. [578]

Stealing was a serious offence but many who were found guilty were rather despised than punished. The thief with the stolen goods tied about his body but otherwise stripped naked would be driven through the village and punished with sticks to the sound of drums and horns of derision. Most crimes, however, might be punished by exacting compensation. Payment took the form of goods or slaves. In the case of murder, the accused might have to pay several slaves to the deceased's relatives, and in addition, a fine to the chief for spilling blood, consisting perhaps of one slave. The amount of compensation expected was mentioned by the plaintiff in the case. One of the expressions used was, "My compensation must cover an ant hill," meaning enough slaves, standing head to head, to cover an ant hill; ant hills in this country are sometimes very big. If a man had no slaves, he would send his relatives or he himself might be forced to become the slave of the plaintiff. There is a saying about this practice: [581] [585]

[539]

> Chiwalili wachimwile wahwa!
> The monkey they tied (with) tail his (own).

Slaves passed over to a man in payment for crime became free men; they were no children to the village and might even be adopted in place of a murdered individual. [547]

When compensation was made by the defendant to the plaintiff, the latter always returned some part of it as a sign that friendship was again established.

Goods or money received in compensation for murder, i.e. blood money, might not go for the purchase of food or clothing. Detection of a guilty party by means of magic and proof of guilt or innocence by ordeal poison are dealt with elsewhere.

Stuffing anyone into giving something for nothing, obtaining goods by false pretenses, was not considered a crime, as anyone was "fair game." For instance, a party of youths would waylay a man with a load of fish, saying they had been ordered by their headman to commandeer it. If the man parted with his fish, so much the worse for him; if he showed fight, he was respected and friendship made with a give-and-take of fish and stuff. Such bluffing is called *kulya nawa*, "to eat with them." To add to their appearance of bona *fides*, the party might have recently borrowed some well-known article belonging to their headman. 674

224 *ndindi*, a joint (of bamboo) which slides down the string sent to the snare so that the captured animal cannot bite or gnaw through the string (Pl. IV, fig. 8; Pl. XIX, fig. 8).

5. *Lukungi* has *mulondo* or *shikuru*, a trap for snare-rats (Pl. XX, fig. 7).

4. *Lukungi* has *ngundu*, a trap for the partridge (Pl. XX, fig. 3).

223 5. *Chijumba cha ijuni*, "the house for birds," also used to trap small animals (Pl. XX, fig. 2).

6. *Lukungi* has *kabwi*, a trap for the *nsoh* (of guinea fowl) (Pl. XX, fig. 4).

7. *Lukungi* has *shikuuta*, a trap for the *tewal* (of the guineafowl); *ku-tuuta*: to put the foot down, to tread. The string square is about 8 x 6 inches (Pl. XXI, fig. 6).

8. *Lisuwa*, a trap made of split bamboo. A bird going to pick up the grain is caught by the head when the trap is released by the string which the trapper pulls (Pl. XXI, fig. 3).

9. *Lusu* has *ijuni* or *ngusu*, a bird-trap made of netting on a hinged frame-work, operated by a string (Pl. XXI, fig. 4).

[224] 10. *Lilusu*, a falling snare trap for mice. Rats are said to pull off the trap with their tails and are never caught (Pl. XXI, fig. 1).

10a. The snare trap set for catching birds (Pl. XXI, fig. 2).

11. *Mukulaya*: (*ukula* = hanging lower), a snare for small birds, set on trees (Pl. XX, fig. 1).

[226] 12. *Fwel ikiswa* was a very simple constriction consisting of two grains of maize threaded on one end of a piece of string some six inches long, at the other end of which is attached a leaf folded up into the form of a cone. The fowl, enticed by the maize, swallows the two grains and the attached string, so that the cone is drawn over its head; it is then helpless and is easily picked up by the thief, who has only to pull on the string to remove the leaf.

224 13. *Chipumumbu*, a hollow cylinder of wood with snare activated by a wooden spring, for catching rats (Pl. XXI, fig. 5).

14. *Chiputo*, a similar trap made of bark, for mice.

15. *Lilusu*: a plaited bamboo cone into which a rat forces its head to get at the bait, but finds, when it tries to withdraw, that it is caught by sharpened pieces of bamboo projecting backwards into the cone (Pl. XX, fig. 6).

227 16. *Mkuuqwi*, a fish-trap of the snare design, from the *Anyanja* (Pl. XX, fig. 5).

17. *Mwipu*, a fish-trap on the lobster-pot principle, often set in gaps in a fence built across a stream, copied from the *Anyanja* trap called *nsoo* (Pl. XXI, fig. 7).

[77] 18. *Nfjui*, also I think from the *Anyanja*, consists of a long basket-work, extinguisher-like arrangement which is clapped down over a swarm of small fish; the hand is introduced through an aperture in one side and the fish removed (Pl. XXI, fig. 8).

2: Mitchell E-5 (1946-1949) 1956 FTT Yao FTT

175 622 is his relatives that are the village gods. Everyone that lives in the village recognises these gods but if anyone removes to another village he changes his gods. He now recognises the gods of his new chief. One wishing to pray to the god (or gods) of any village naturally desires to have his prayers presented through the village chief, because the latter is nearly related to the village god, and may be expected to be better listened to than a stranger.'

In this quotation the word 'chief' is used for village headman. In Yao the same term is used for both the chief of the country and the chief of the village (*mwenye*).

175 670 681 686 It is clear from MacDonald's description that foreign villages were looked upon as undifferentiated whole. When discussing punishment in general he writes:

We find that almost every offence may be punished by death, but where an offender is not redeemed, the particular punishment is left to the headman of the injured party. For instance, if a headman of Kumpumu's go and say, 'Chenyono has killed a subject of mine; I have caught a subject of his and want to kill him,' the chief's answer will be, 'He has done you wrong, do according to your heart (*pali mtima wako*).' The punishment is thus inflicted not by the criminal's own chief, but by the injured party, and it may fall, not on the guilty person, but on one connected with him.[1]

For example, he describes how some children had been carried off from Che Lomoni's village one night in 1880.

Towards the end of 1880 [he recounts], Che Lomoni, a Bisenyu headman, captured two men from Mpingwi, and put them in slave-sticks. They belonged to the village that had kidnapped the children a few months before, and native law did not require proof that the men were personally guilty. They were undoubtedly innocent. Still they were kept in close confinement till their friends returned the captives in February.[2]

175 622 The village headman—called the 'owner of the village' (*mwenye mtaa*)—was the representative of the village in all public transactions, and also the representative of such higher authority as existed, to the village members. Duff MacDonald writes: 'A chief represents and is responsible for all his people. If anyone wish to treat with a native village it is with the village

[1] MacDonald, *Africana*, i, 63.
[2] MacDonald, *Africana*, i, 186. [3] MacDonald, *Africana*, ii, 234.

for wishbonch were carried out by swaggling with a piece of cotton at a place appointed for the purpose some miles from the chief's village. [574 591]

There was no case against a man who seduced an unbetrothed girl, the latter being considered entirely at fault. [587]

After divorce, the children always remained with the mother. The man left his wife after the case, saying, "I will take my spear and some of the grain and chickens, but the children will always know their father." [581]

Murder was a question of compensation to the deceased's relatives and was not punished by death. [582]

Stealing was a serious offence but many who were found guilty were rather despised than punished. The thief with the stolen goods tied about his body but otherwise stripped naked would be driven through the village and punished with sticks to the sound of drums and horns of derision. Most crimes, however, might be punished by exacting compensation. Payment took the form of goods or shows. In the case of murder, the accused might have to pay several shows to the deceased's relatives, and in addition, a fine to the chief for spilling blood, consisting perhaps of one show. The amount of compensation expected was mentioned by the plaintiff to the man. One of the expressions used was, "My compensation must cover an ant hill," meaning enough shows, standing hand in hand, to surround an ant hill; ant hills in this country are sometimes very big. If a man had no shows, he would send his relatives or he himself might be forced to become the slave of the plaintiff. There is a saying about this practice: [585] [581]

> (Ntwalili mukhwalo wakwe!
> The monkey they tied (with) tail his (own).

[539]

Shows passed over to a man in payment for crime became free men; they were an addition to the village and might even be adopted in place of a murdered individual. [547]

When compensation was made by the defendant to the plaintiff, the latter always returned some part of it as a sign that friendship was again established.

Goods or money received in compensation for murder, i.e. blood money, might not go for the purchase of food or clothing. Detection of a guilty party by means of magic and proof of guilt or otherwise by ordeal poison are dealt with elsewhere.

Stalling anyone into giving something for nothing, obtaining goods by false pretence, was not considered a crime, as anyone was "fair game." For instance, a party of youths would waylay a man with a load of fish, saying they had been ordered by their headman to commandeer it. If the man parted with his fish, so much the worse for him; if he showed fight, he was suspected and friendship made with a give-and-take of fish and stuff. Such stalling is called *kulya nsoni*, "to eat with them." To add to their appearance of bona *fides*, the party might have recently borrowed some well-known article belonging to their headman. 674

2: Mitchell E-5 (1946-1949) 1956 FT7 Yao FT7

766 by his relatives. For the feasts during the mourning at a chief's
767 death the food is acquired by institutionalized pillage (*cipisinde*).
The villagers in a chiefdom are often first informed of the death of a chief by the appearance of men from his village. These men are by custom allowed to take from a village any article of food they can find—flour, a goat, some chickens, prepared relish, or whatever is lying around in the village. The owners of the food may not charge them with theft. This food is used in the funeral feast. The excuses to which the chief's men may go became circumscribed after the White conquest. Previously, almost any crime short of murder could be committed under the guise of *cipisinde*. More recently, owing to Government opposition, it has been restricted to the taking of smaller articles of food, such as flour and chickens. Some people are beginning to object even to this. The chief's funeral is a public affair and all his subjects may attend it. The effect of the *cipisinde* is to bring together enough food for the chief's funeral feast. Here, as before, the chief's men may not cross the boundary for fear of reprisals, and the effect is to impose a levy in an informal way over most of the villages in the chief's area.

The Chief as a Symbol of Unity

693 The chief is a representative of his people and it is his par-
694 ticular duty to ensure their welfare and that of the chiefdom as a whole. His symbolic representation of the unity of his people is brought out clearly by his right to fines in cases involving bloodshed and arson. Strife and division in a chiefdom in the old days were likely to end in spilt blood and burnt huts so that the Yao associate bloodshed and hut-burning with dissension within the chiefdom.

684 Most other offences are against the individual and not the
685 chiefdom as a whole: the case is brought to the chief so that compensation may be awarded. Adultery and theft thus are definitely civil offences. Nowadays, a fine is imposed, but this is seen to be a White innovation, and the money from it is looked upon as 'Boma' money.[1] In disputes where blood has
682 been shed, however, the chief is entitled to fine the guilty party on his own account. The chief is said to be 'blinded' by the
683 blood and a payment must be made to him before he may 'see'

[1] i.e. Government money.

2: Mitchell E-5 (1946-1949) 1956 FTT Yao FTT

again. In the past, disputes hinging on murder had this aspect, though they were usually settled by a feud. Nowadays, of course, all murder cases are lifted 'altogether out of the hands of the chief, but the special fine for bloodshed is still levied in cases of assault. When a man is convicted of assault in the chief's court he will have to pay three separate amounts: one to the victim as compensation, one as a fine to the Native Treasury, and one to the chief 'so that he may see again'.

A similar provision applies to cases of arson. When a case is brought to the chief because a man has burnt another's hut, the chief will say that the guilty man has 'brought a torch into his country'. The man convicted of arson will have to pay a special fine to the chief in the same way as the man who caused bloodshed. The association of the unity of the chiefdom with fire probably has some place in the attitude of the chief here. People who have come to a chiefdom as strangers are said to have come to 'seek the chief's fire',[1] and all the fires in the chiefdom are supposed to have been kindled from one flame. This expresses the unity of the chiefdom: the burning of the hut, therefore, symbolizes the introduction of discordant elements, as well as being a serious crime in itself.

The Chief's Judicial Functions

It is clear from MacDonald's writings that in pre-White days the chief settled most of the serious disputes in his chiefdom. Nowadays, this function of the chief has been given legal sanction under the Native Courts' Ordinance of 1933. 'A' grade courts have the power of imposing fines not exceeding £5, or 6 months' imprisonment and 12 strokes whipping; and 'B' grade courts may impose fines not exceeding £1 and imprisonment including hard labour not exceeding one month, but not corporal punishment. The Native Authorities, Jalasi, Nyambi, Kawinga and Liwonde, all have 'A' courts; the Subordinate Native Authorities, Chikweo, Ngokwe, Chiwalo, Chamba, Mposa, Mlomba, Stora, have 'B' courts. Only a certain proportion of disputes is brought for trial in these Native Authority courts. This is because, firstly, the Administration does not admit the legality of some disputes. Most of these centre on charges of witchcraft,

[1] A similar view of fire in the village context is discussed in Chap. V, p. 112.

[illegible] [illegible]

[illegible]

[illegible]

[illegible]

[illegible]

[illegible]

[illegible]

[illegible]

[illegible]

[illegible]

[illegible]

[illegible]

[illegible]

1: Tew . E-4 (no date) 1958 FT7 Tao FT7

Kanyanda, used to persuade Nyanja to help in the unofficial rite. When Kapeni in turn fled to Mount Sanke from the Ngoni, and died there, the Yao addressed their offerings to him, not to Kanyanda.[1] The word *Mulungu* has sometimes been interpreted to mean Supreme Being, God, Creator, but among the Yao it seems not to have personal connotation. It was used to describe the agent in any mysterious event,[2] or the place where the monster spirits (*mwabi*) were supposed to dwell. Daily life was full of acts of respect towards the ancestors, who were regarded as jealous of the living, and requiring constant propitiation.[3]

Sorcery

Accusations of witchcraft and measures for dealing with it play a dominant role in Yao social life. With certain exceptions nearly all diseases and deaths are thought to be caused by sorcery. The exceptional causes are: the hand of God, old age, the transgression of certain taboos, and battle wounds. If sorcery is suspected the relatives of the sick or dead man consult the diviner to identify the offender.

Yao (in common with the Mawri and many peoples of Central Africa) believe that sorcerers have a craving for human flesh, which they satisfy by killing with magic the victims of their malice and hatred. They acquire their magical powers by an apprenticeship, which might include incestuous relations with mother, sister, or mother-in-law, or sleeping on the grave of the mother for one night. The sorcerer then learns the medicines and finally demonstrates his power by killing a young relative by magic; he waits till the victim is buried, and then magically exhumes him for the secret feast with his fellow sorcerers. Each sorcerer who shares the flesh owes a debt to the one who secured the victim.

Charms are used as preventive measures against sorcery. When a diviner has diagnosed the cause of death as sorcery, retaliatory measures are taken. The headman of the village could either call in the witchfinder to identify the offender or he could call in the diviner to take action against all the sorcerers in the village. After the diviner, *Mahindlia*, had revealed the guilty ones, they were challenged to take the poison ordeal to prove their innocence. If they died, the proof and the punishment were simultaneously accomplished. If they survived, the diviner was held to have been at fault and they were acquitted. The witch doctor was supposed to entice sorcerers to the graveside, and slay them with magic more powerful than their own.

The diviner's findings are to-day checked by the poison ordeal administered to a chicken. A sorcerer detected in this way might be asked to provide medicine for the man whose sickness he had caused, or after a death he might be compelled to pay compensation. If the accused is a village headman, he will not be summoned before a chief, but his brother will take the villagers away from the sphere of his influence, or he may be chased away from the district. Accusations of sorcery follow certain regular lines. Nearly all accusations fall on relatives. Diviners are consulted by matrilineal relatives of the sick or dead person, and the man most usually accused is the brother of the sorcery, or the husband of his sister. Witchcraft is therefore a manner of expressing the hostilities latent in these relations, which are, in the Yao social system, full of tension.

[1] Macdonald, 1882, vol. i, p. 70.
[2] Hetherwick, 3, 1900.
[3] Hetherwick, 1902, pp. 14-15; Macdonald, 1882, vol. i, pp. 58-73, 204-13.

2: Mitchell E-5 (1946-1949) 1956 FT7 Yao FT7

by his relatives. For the feasts during the mourning at a chief's death the food is acquired by institutionalized pillage (*cipisinde*). The villagers in a chiefdom are often first informed of the death of a chief by the appearance of men from his village. These men are by custom allowed to take from a village any article of food they can find—flour, a goat, some chickens, prepared relish, or whatever is lying around in the village. The owners of the food may not charge them with theft. This food is used in the funeral feast. The excesses to which the chief's men may go became circumscribed after the White conquest. Previously, almost any crime short of murder could be committed under the guise of *cipisinde*. More recently, owing to Government opposition, it has been restricted to the taking of smaller articles of food, such as flour and chickens. Some people are beginning to object even to this. The chief's funeral is a public affair and all his subjects may attend it. The effect of the *cipisinde* is to bring together enough food for the chief's funeral feast. Here, as before, the chief's men may not cross the boundary for fear of reprisals, and the effect is to impose a levy in an informal way over most of the villages in the chief's area.

The Chief as a Symbol of Unity

The chief is a representative of his people and it is his particular duty to ensure their welfare and that of the chiefdom as a whole. His symbolic representation of the unity of his people is brought out clearly by his right to fines in cases involving bloodshed and arson. Strife and division in a chiefdom in the old days were likely to end in spilt blood and burnt huts so that the Yao associate bloodshed and hut-burning with dissension within the chiefdom.

Most other offences are against the individual and not the chiefdom as a whole: the case is brought to the chief so that compensation may be awarded. Adultery and theft thus are definitely civil offences. Nowadays, a fine is imposed, but this is seen to be a White innovation, and the money from it is looked upon as 'Boma' money.[1] In disputes where blood has been shed, however, the chief is entitled to fine the guilty party on his own account. The chief is said to be 'blinded' by the blood and a payment must be made to him before he may 'see'

[1] i.e. Government money.

2: Mitchell E-5 (1946-1949) 1956 FT7 Yao FT7

again. In the past, disputes hinging on murder had this aspect, though they were usually settled by a feud. Nowadays, of course, all murder cases are lifted altogether out of the hands of the chief, but the special fine for bloodshed is still levied in cases of assault. When a man is convicted of assault in the chief's court he will have to pay three separate amounts: one to the victim as compensation, one as a fine to the Native Treasury, and one to the chief 'so that he may see again'.

A similar provision applies to cases of arson. When a case is brought to the chief because a man has burnt another's hut, the chief will say that the guilty man has 'brought a torch into his country'. The man convicted of arson will have to pay a special fine to the chief in the same way as the man who caused bloodshed. The association of the unity of the chiefdom with fire probably has some place in the attitude of the chief here. People who have come to a chiefdom as strangers are said to have come to 'seek the chief's fire',[1] and all the fires in the chiefdom are supposed to have been kindled from one flame. This expresses the unity of the chiefdom: the burning of the hut, therefore, symbolizes the introduction of discordant elements, as well as being a serious crime in itself.

The Chief's Judicial Functions

It is clear from MacDonald's writings that in pre-White days the chief settled most of the serious disputes in his chiefdom. Nowadays, this function of the chief has been given legal sanction under the Native Courts' Ordinance of 1933. 'A' grade courts have the power of imposing fines not exceeding £5, or 6 months' imprisonment and 12 strokes whipping; and 'B' grade courts may impose fines not exceeding £1 and imprisonment including hard labour not exceeding one month, but not corporal punishment. The Native Authorities, Jalasi, Nyambi, Kawinga and Liwonde, all have 'A' courts; the Subordinate Native Authorities, Chikweo, Ngokwe, Chiwalo, Chamba, Mposa, Mlomba, Stora, have 'B' courts. Only a certain proportion of disputes is brought for trial in these Native Authority courts. This is because, firstly, the Administration does not admit the legality of some disputes. Most of these centre on charges of witchcraft,

[1] A similar view of fire in the village context is discussed in Chap. V, p. 112.

2: Mitchell E-5 (1946-1949) 1956 FT7 Yao FT7

adjusts itself to the changes in its composition. At this point I wish only to indicate how the differentiation among the various segments of a matrilineage is reflected in the way the members site their huts in a village.

The Segmentary Process

The segmentary tendencies within the lineage are countered by unifying forces, but the cleavages between the lineage sections show up at the slightest provocation. Once the cleavage starts it widens rapidly and charges of sorcery become more and more frequent between the two sections until eventually one moves out to found a new village. A cleavage of this type has been developing in Cikoja village for the last eight years. When I left the field in 1949, talk of migration was in the air but it had not yet happened. I summarize the major events which led to the present situation.

The cleavage first manifested itself in 1942 when Bt. Mbwana (F2) [1] fought with her mother's younger 'sister' Ayesi (E8). These two were pounding at the same place in the village and Bt. Mbwana took Ayesi's flat sifting basket. She retained it for about four days without telling Ayesi that she had it. One day Ayesi saw it at the pounding point and asked Bt. Mbwana where she got it. They had a few words about it and Bt. Mbwana returned it and thought no more of it. She was pregnant at the time and was confined about a month later. It was her fifth child but she had a greatly prolonged labour. After labour had been going on for some hours, Cilimba (F1), her eldest brother, thought that there must be something wrong and sent his two younger brothers, Kausi (F3) and Gwili (F4) to a diviner. The diviner indicated that the cause of the difficult birth was that her 'younger mother' Ayesi was bearing her malice,[2] and advised that Ayesi should blow water from her mouth and declare that she bore no malice. Kausi and Gwili returned and went to Bt. Amisa (E4) who was Ayesi's elder sister and told her what the diviner had said. Bt. Amisa did as she was advised and fetched Ayesi to the door of the hut in which Bt. Mbwana was lying, and made her confess. The child was born immediately. After a week Cilimba and Kausi brought a complaint to the village headman Cikoja (E7). They accused Ayesi of trying to kill their sister. Cikoja sent a message to

[1] The reference numbers refer to the genealogy in Appendix D.

[2] Difficult labour is usually assumed to be due to adultery, but it may also be due to sorcery or malice. See p. 138, and Chap. VII, p. 185.

2: Mitchell E-5 (1946-1949) 1956 FT7 Yao FT7

613 578 845 683 his eldest uterine sister's first-born and second-born sons, Amidu (F18) and Kanyenga (F19), to advise them of this dispute, and told them that they would have to assume responsibility for the actions of their mother's younger sister, Ayesi. At the same time he sent to a neighbouring village to call in an unrelated man to act as arbitrator in the dispute. There was much argument and eventually the arbitrator awarded 15*s.* to be paid by Cikoja as leader of the junior lineage section to Cilimba as leader of the senior section. Amidu and Kanyenga found 10*s.* between them and gave it to Cikoja to give to Cilimba. The other 5*s.* they said they would try to find and pay later.

This payment formally settled the dispute but the tension was near to the surface. Amidu and Kanyenga said that there was separation in the group now that they had started to eat money. They were not wrong. Ayesi was pregnant and near to confinement. When she was confined her labour was as difficult as Bt. Mbwana's (it was also her fifth confinement). When her birthpang confessions seemed to be unavailing Bt. Bwana Isa (F16), her elder sister's daughter, went to Kanyenga to tell him that their 'younger mother' was having a difficult childbirth. Kanyenga remarked that she had had many children before and had not suffered, so that there must be some reason for her difficulty. Then Kanyenga and his sister went to Ayesi's husband's sister's hut [1] to find a representative to go with them to a diviner. When they got there Ayesi's husband's sister told her son to accompany her brother's wife's representative to the diviner. The diviner indicated that the cause of the prolonged birth was the malice felt by Bt. Mbwana because the rest of the compensation awarded had not yet been paid. He said that the only thing to do was to call Bt. Mbwana and to get her to blow water from her mouth at the hut door where Ayesi was confined. Bt. Amisa went to find Bt. Mbwana and made her do this. Immediately Ayesi delivered a stillborn child.

The next morning Amidu and Kanyenga went to Cikoja and blamed him for the stillborn child.[2] Cikoja called Cilimba to listen to the complaint. Ayesi was inconsolable. She said that she had blown water for the sake of Bt. Mbwana who to-day had a child, whereas she was mourning her child. Once again Cikoja called in outsiders to act as arbitrators and the members of the two segments gathered to settle the dispute. At the end of protracted wrangling

[1] Ayesi was married to her MMMBD5 (Katoli (D33)), whose lineage lived in another part of the same village. See genealogy and hut count in Appendix D.

[2] Cikoja is a representative of his lineage even to the lineage members. This accusation simply means that the blame lies within the lineage.

2: Mitchell E-5 (1946-1949) 1956 FT7 Yao FT7

the arbitrators awarded 30s. compensation to be paid by Cilimba to Cikoja, less 5s. owing. This money was to be paid to Ayesi in compensation for the loss of her baby. Ayesi, however, refused to accept the money because she said she wanted to have her baby. The matter now became an intra-segment affair and Cikoja, Amidu, Kanyenga and Kaifa (F36), the son of Ayesi, with Bt. Amisa had a meeting on what to do. Ayesi was quite adamant about it. There was nothing to do but to drop the matter, and the state of tension between the segments remained as it was before.

The next incident occurred in 1943. Mpulula, the husband of Bt. Amisa, had some goats. One day two of them strayed on to the verandah of Bt. Madi's hut. Bt. Madi (F10) was the daughter of Asuna (F2) and a member of the senior lineage segment. One of the goats nosed its way into a basket of flour that was lying under the verandah and started to eat it. Bt. Madi came out and picked up a log that was lying nearby and threw it at the goat. It broke the goat's leg and the goat had to be destroyed. The owner, Mpulula, who was watching at that moment immediately rebuked the woman. He went and reported the matter to Cikoja and he sent a message to Mpulula's marriage surety who sent back to say that they would meet at Chiwalo's hut the following morning. The arbitrator in the case finally decided that the correct action should have been to take the goat to the owner and to lay a complaint against him. As it was he had to award compensation of 30s. to be paid to the owner of the goat. Mpulula, however, refused to take the money. He argued that although the goat was his, so was the offender.[1] He said that he was afraid of sorcery so he would take a token amount of 3s. only. Cikoja gave him this.[2]

A few months later the eldest child of Bt. Bwana Isa (F16) suddenly fell ill and died.[3] Kanyenga, Kaifa and Msusa went to the diviner. Kaifa, the son of Ayesi, went as the headman's representative. Kanyenga went as the warden of the sorority-group, i.e. the child's mother's brother. Msusa was the marriage surety of the child's father. Kanyenga consulted the diviner who indicated that Kanyenga's mother Bt. Amisa was responsible but that she was not a sorceress. Sorcery, he said, was introduced by an unknown person who was using Bt. Amisa's grumbling as a screen. Kanyenga refused to accept the finding of the diviner, saying that his mother had never been 'caught'

[1] His wife's collateral sister's child he also calls 'my child'.

[2] Mpulula is a stranger in the village and in this situation Cikoja represents both segments to Mpulula, even though the senior segment is guilty.

[3] Sudden illness, called *cikomo* or 'the hammer', is believed to be without a doubt due to sorcery.

3: Stannus D-5 (ca. 1912) 1922 FT7 Yao FT7

village had its regular place of torture and *masui* drinking, two or three miles from the village. Those used by Malemya, the old Zomba chief, may still be seen. 754

A clear way is made two feet broad and fourteen feet long in the bush and here the accused takes up his position attended on either side by the two pleaders, the defending pleader on the right, the prosecuting on the left. Facing east or west or following the directions originally given by the caster-of-lots, that is, taking up the position in which the accused is supposed to take a midnight bath, or practice some rite under a tree or an ant hill, etc., he is given a decoction of *masui* to drink from a gourd. This decoction is made on the spot, the bark being pounded up on a stone by one of the prosecutors. The accused must have had no food that day. He then starts to walk up and down the short cleared path with the two men, one on either side of him, the one saying, "Now you have drunk *masui*, you shall die as you deserve; you did in So-and-So," the other denying the accusations, saying, "He shall vomit the poison." He is watched by the assembled crowd who note the various symptoms of which vomiting is the first and said to be the most characteristic. After this has gone on for some time, they watch for what is called the *nyongo* which is said to be "a ball of bile formed in the mouth and expelled by vomiting so that it bursts on reaching the ground but not before", followed often by a second ball, twenty minutes later. Should this be expelled, recovery may be expected, foreshadowed by clearing of the vision. If he recovers, he is indeed a wonderful man and is hailed on all sides. The women trill with their tongues and shout, and he is carried back in triumph; the defending pleader will swagger about and demand anything he wants for his client. 695

A fatal termination is characterised by little and non-forcible vomiting. Purging is common but said to be painless. Vision is affected and as time goes on, the spectators ask what he can see, "Do you see that over there?" indicating a hill. If he makes mistakes, then they say, "Ah, he is going to die!"

The poison may not take full effect for three or four hours. The end is ushered in by a last stage when the legs become weak; he staggers, then unable to stand any longer, falls to the ground dead, execrated by the onlookers who rush in and hurl stones upon the body, crushing it. The relatives take the mangled corpse and lay it on logs covered with grass in the bush. No other covering is permitted. It may be placed in a tree by people acting as mole. Burial is forbidden. [766]

In some cases *masui* used to be burned, not being given the chance of the poison trial. This took place at a recognised spot like *ndoso*. The last man to be burned by Malemya was Mtulula in 1892. Burning was also a punishment in some bad cases of murder. Such was the fate of Chingale. The man was put in a slave-stick, a pile of logs was built round him and then set on fire. [683]

Witch-finder. In addition to ordeal poison, another method of discovering a *masui* is by "smelling out." If a number of people have died in a certain village, the inhabitants may begin to think that there is a *masui* among them, and procure the services of a *mbiashila*. 754 695 791

2: Mitchell E-5 (1946-1949) 1956 FT7 Yao FT7

766 by his relatives. For the feasts during the mourning at a chief's
661 death the food is acquired by institutionalized pillage (*cipinimbe*). The villagers in a chiefdom are often first informed of the death of a chief by the appearance of men from his village. These men are by custom allowed to take from a village any article of food they can find—flour, a goat, some chickens, prepared relish, or whatever is lying around in the village. The owners of the food may not charge them with theft. This food is used in the funeral feast. The excesses to which the chief's men may go became circumscribed after the White conquest. Previously, almost any crime short of murder could be committed under the guise of *cipinimbe*. More recently, owing to Government opposition, it has been restricted to the taking of smaller articles of food, such as flour and chickens. Some people are beginning to object even to this. The chief's funeral is a public affair and all his subjects may attend it. The effect of the *cipinimbe* is to bring together enough food for the chief's funeral feast. Here, as before, the chief's men may not cross the boundary for fear of reprisals, and the effect is to impose a levy in an informal way over most of the villages in the chief's area.

The Chief as a Symbol of Unity

643 The chief is a representative of his people and it is his par-
579 ticular duty to ensure their welfare and that of the chiefdom as a whole. His symbolic representation of the unity of his people is brought out clearly by his right to fines in cases involving bloodshed and arson. Strife and division in a chiefdom in the old days were likely to end in spilt blood and burnt huts so that the Yao associate bloodshed and hut-burning with dissension within the chiefdom.

684 Most other offences are against the individual and not the
685 chiefdom as a whole: the case is brought to the chief so that compensation may be awarded. Adultery and theft thus are definitely civil offences. Nowadays, a fine is imposed, but this is seen to be a White innovation, and the money from it is looked upon as 'Boma' money.[1] In disputes where blood has
682 been shed, however, the chief is entitled to fine the guilty party on his own account. The chief is said to be 'blinded' by the
683 blood and a payment must be made to him before he may 'see'

[1] i.e. Government money.

2: Mitchell E-5 (1946-1949) 1956 FT7 Yao FT7

culties are settled by the marriage sureties [1] who only report to him after the affair is settled. In disputes of unusual gravity, the headman may call in unrelated persons [2] to arbitrate, but he himself must be present.

His own behaviour is expected to be exemplary. Any deviation from the norm is likely to be strictly censured, not only by his own villagers, but also by other village headmen, who may say, 'Important men do not behave in this way.' A man who had an argument with his sister's son was told this. He had taken the dispute to a neighbouring headman who decided against the village headman and rebuked him for behaving in a way not consonant with his position. Village headmen should be above squabbling with their villagers. A village headman who was also a leech had virtually raped a woman whom he was treating. He tried to maintain this was part of the treatment. Her matrilineal relatives reported the matter to the headman of her village and he brought the errant headman in front of the chief who said, 'You are wrong to do this when you are an important man. You are a big man and you act as a commoner does. You ought to be able to show the commoners how to behave.' He was made to pay a compensation of £2 10*s.* and fined 10*s.* Had he been a commoner he would have been made to pay a compensation of only 30*s.*

The ultimate sanction to which all headmen are subject, is that their people will leave them if they behave badly. This was the fate of Cikumba.

In 1944 Cikumba had a village of about 30 huts. The son of the first Cikumba, Meya, had two wives who were living virilocally in Cikumba's village. Meya had enlisted in the army. While he was away, Cikumba, the village headman who was Meya's father's sister's son (though he called him 'father' because of positional succession), started taking Meya's two wives to beer drinks. Meya's sister one day asked Cikumba about his behaviour, but he only said that Meya could not do anything as he was far away. Things had gone too far, however, when one morning he was seen coming out of the

[1] The representative of a spouse in all affairs arising from conjugal relationships. They are usually senior matrilineal relatives. See Chap. VI, pp. 176–7. Their rôle is discussed fully in *Marriage among the Machinga Yao of Southern Nyasaland.*

[2] *Mundu juampambali*, i.e. a person from outside.

604 578 Mwanace. He was the junior marriage surety to the marriage and it was his duty to go to the man's marriage surety, report the matter and arrange to take some action to get the man well again. Mwanace, however, refused to take any action. Instead he tauntingly said, 'Take the matter to Ali Kasunka, it is his village.' The woman did so, and Ali Kasunka asked immediately whether she had not taken the matter to Mwanace. She replied that she had and repeated Mwanace's words. Ali Kasunka took the matter up with Mwanace who now objected to being ordered about. Ali Kasunka, however, impressed on Mwanace that the village was his (Ali Kasunka's) and the authority rested with him. He then went to the man's home to tell them of Wayison's illness. The man's representative came and he and Ali Kasunka consulted a diviner. They found that the man was ill from *ndaka*, which he had contracted in his home village. They found medicine and treated him and he recovered.

604 578 833 787 684 Things came to a head in 1947. Mwanace's younger sister Nyangu II (D11) was married to a soldier who was away. One morning she came to her mother's elder sister, Mbalasyao (C1),[1] and told her that she had found semen on her pudenda and could not recall having had intercourse with anyone. Mbalasyao told Ali Kasunka about this. It was clearly a matter for divination and Ali Kasunka called Mwanace and told him that they ought to consult a diviner. But Mwanace's attitude, even in such a crisis as this, was hostile. He refused and said it was not his work to do this sort of thing. Ali Kasunka therefore went to a diviner with his sister Mbalasyao. The diviner said the semen was Mwanace's. He said that he had entered her hut magically and had sexual intercourse with her without her knowing it.[2] When Ali Kasunka got back to the village he called Mwanace and asked him what tricks he was playing in the village. Mwanace said that he had done nothing—it was not his village. Ali Kasunka then vaguely hinted at his crime. Mwanace pressed for more details and Ali Kasunka accused him outright of sleeping with his sister. He had hardly uttered the accusation before Mwanace had drawn a knife and attacked him. Mwanace was screaming something to the effect that Ali Kasunka had come to him with lies about having seen a diviner. Ali Kasunka beat off the attack and reiterated the accusation. Mwanace now turned his rage upon the woman and tried to catch her. Two of the men in the village then caught Mwanace and subdued

[1] Her mother, Amaliama, was dead.

[2] This is called *ciponeceya*. It combines the use of magic with sister-incest. [835] To the Yao mind there could be no clearer proof of sorcery. I have already mentioned the importance of sister-incest in relationship to the beliefs surrounding the sorority-group. See p. 146.

2: Mitchell E-5 (1946-1949) 1956 FT7 Yao FT7

him. The woman in the meantime had run to Chiwalo's hut half a mile away. Here she complained to the chief that Mwanace wanted to kill her. Chiwalo refused to listen to her complaint and sent for Ali Kasunka. When he had come and explained the sequence of events, he continued saying that he would like to take the case to court. Chiwalo, who was Ali Kasunka's wife's father's sister's son (hence a classificatory younger brother) and whose henchman Ali Kasunka was, refused to arbitrate in the case but referred it to Kawinga. On the day of the case the woman's husband came back from the Army. The case was tried and eventually the court assessors awarded a damages claim of £3 to be paid by Mwanace to his sister. The husband, at the same time, said that he could not remain married to her because whenever he saw her he would think that she had slept with her brother and in court he gave Ali Kasunka a marriage termination payment. The tension between Ali Kasunka and his 'sister's son' did not end there however. When they got back to the village Ali Kasunka remonstrated with Mwanace saying, 'Are you not ashamed to have married your sister?' Mwanace said that he could not stand that sort of thing and went back to live uxorilocally.

A crucial point in this case history is that the women did not like Mwanace. Almost certainly there would have been a split in the village had the women had more confidence in Mwanace. The tension between Ali Kasunka and Mwanace, although the conflict is inter-generational, started, as it consistently does, from the relationships of a man to the women of his matrilineage. Without the support of the women, younger brothers or sister's sons are impotent against the power of their senior relatives. It is only when they can induce the women to follow them and to leave their rivals that they can found a new village and thereby begin to earn prestige. Therefore, although the men are the active agents in bringing about a physical act of fission, they are in fact only making manifest a situation which is latent within the lineage.

The position of the senior male matrilineal relative is of fundamental importance in questions involving segmentation. His position is seen most clearly in the dominant matrilineage, in which the name of the village is inherited. The Yao practise 'positional succession'. A man not only succeeds to his mother's brother's name but also to the position of the mother's brother in the social structure as a whole.[1] It follows that when the

[1] See Chap. V, p. 121.

pregnant, the meeting of the sponsors will have to be postponed until after the ceremony connected with her first quickening with child, *Litiuse*.[1] This ceremony must be performed whether the girl is regularly married or not. One party cannot ask the other for permission that both ceremonies take place at the same time. The answer would be given, "You are asking me to kill two beasts with one bullet." In rare cases, the chief may sanction the marriage and *Litiuse* ceremonies taking place at about the same time, i.e. the marriage is arranged before the child is born. 584 843

Widowhood. A widow is considered unclean for a period after the death of her husband. She wears a band of palm-leaf or string around her forehead. When the period is passed and some man wishes to marry her, arrangement is made with some other man to cohabit with her for payment; she is then said to be clean and can go to her prospective husband. This ceremony is called *kuteme nponji*, "to cut the strings," or in Chinyanja, *ku-dula mlese*, "to cut the palm"; unless it is performed, the new husband will sicken. The man introduced for the purpose is called by the Yao, *hitwa*, the "hyaena," "he who comes by night." 589 587 [833]

Divorce. From time to time, married people disagree and one deserts the other. If the woman leaves the man, he has a claim against her and the man to whom she goes for all the clothes he has supplied her with during their married life. The husband usually sides with the wife's relatives and arranges that they look after the children; he does not claim them. When the husband and wife mutually wish to separate, they both meet with their sponsors and everything is duly arranged. The husband will give his wife an arrow, saying, "*Mpamba* (the arrow)," meaning, "If I come back, may it kill me." The place of the arrow may be taken by a bullet or any other object, even a piece of grass. The man will add, "*Swaka, swaka, na likewu!* (rattling, rattling, it is a rat!)," inferring that if his wife hears something rattling in the house, it is a rat, not himself trying to come back. There is no definite payment of compensation. If the woman marries again, she presents the "arrow" to her second husband as a sign that she has been freed from her first marriage; without this token, no man would marry her. 586

Actual adultery was in the old days very rare owing to the strict enforcement of rules, and the case of a woman demanding divorce on account of the adultery of her husband formed a *causa célèbre*. The case heard by the chief would last for days and hundreds of people would come to listen. Neighboring Anyanja pleaders would be invited to speak and great excitement prevailed, as these latter would be accompanied by their villagers, who, to the accompaniment of continuous drumming, would sing, "*Mbewala anakadwa m'nkonde*,[2] (The bush-buck has run his head into the net)," while they ran about running their heads into their game-nets. 684 586

Other causes of separation are neglect of duty, sterility of the wife, and habitual death of the children born. 586

[1] Vide infra, p. 274. [2] Chin.

643 ivory by his own hunting parties or as a kind of tithe on other hunting expeditions. The ground tusk, i.e. the tusk on the side on which the elephant falls when killed, was the chief's share. In the same way, the hind leg on the ground side of any game animal killed was sent to the chief. He took a share of the spoils of war and most of his people yearly gave him either service in building houses, etc., or kind in the form of food-stuffs, but he enforced no service and levied no tax, except for the making of a new burial place.[1] New settlers in his village were expected to invite him to drink beer made with their first crops.

In return, he always provided cloth to invest the body of the dead. He also made presents at the time of *Unyago*.[2]

A chief's life, therefore, may not be "all beer and skittles," though he consumes a good deal of the former and a kind of skittles[3] was a favorite pastime of one of the Malemyas. A saying embodying this idea was used when pleading for a man who had [538] committed adultery with his chief's wife "one who carries a tortoise (on a string over his back) is likely to get his clothes soiled"; a man has to put up with the troubles his belongings bring him. So a chief must bear with his own people who do wrong.

643 Ample opportunity for exercising such forbearance was provided, since the chief was formerly the adjudicator of all disputes and dispenser of justice in all crimes. The headman 692 did the same in a smaller way but appeal could always be made to the chief. Cases were heard by the chief sitting in council. He and his headmen and elders would assemble in the village open space and here cases were stated, often at great length.

Each party to the case would employ some man well known for his powers of oratory as leading counsel. The speaker for the plaintiff would start proceedings by a recital of all the evidence he could collect. After him would follow innumerable speakers, whether actual witnesses or not, each telling as good a story as he could, and the defendant's case would then be put by his representatives. There was no cross-examination but at the end, a summary was made and judgment given. A chief often took the advice of some one of his old men whom he trusted.[4] The chief received no payment for his services, except in the case of murder; neither did the "counsel" receive anything for their efforts.

674 **Crimes.** Causing the death of a person by witch medicine, *usuwi*, was the most heinous [754] crime; a *wiwi* ordeal might be held, but if the offense was proved, burning was the punishment which usually followed.

[684] The offense second in gravity was adultery. This might be expiated by payment or by death, according to the circumstances under which it occurred; mutilation was often [696] performed in the case of a chief's wife. All death sentences with the exception of those

[1] Vide supra, p. 244. [2] Vide supra, pp. 248, 264. [3] Vide infra, p. 360.

[4] The old Malemya (Nahtumbo) has some very fine men among his counsilors. Kumtupa and Chinguile, the latter renowned for his oratory, were his chief advisers in legal matters. Ndakka, a slave, was his mentor in all personal and family affairs, while Chekasongo was in charge of all ceremonies and served with his assistant, Mpanje, as high priest on all occasions of intercession. Others acted as his emissaries, such as Mkapiti who always went on any missions to the Angoni, among whom he was known as Ndunjira.

3: Stannus D-5 (ca. 1912) 1922 FT7 Yao FT7

for witchcraft were carried out by strangling with a piece of calico at a place appointed for the purpose some miles from the chief's village. 674 696

There was no case against a man who seduced an unbetrothed girl, the latter being considered entirely at fault. 684

After divorce, the children always remained with the mother. The man left his wife after the case, saying, "I will take my spear and some of the goats and chickens, but the children will always know their father." 586

Murder was a question of compensation to the deceased's relatives and was not punished by death. 682

Stealing was a serious offence but many who were found guilty were rather despised than punished. The thief with the stolen goods tied about his body but otherwise stripped naked would be driven through the village and prodded with sticks to the sound of drums and hoots of derision. Most crimes, however, might be punished by exacting compensation. Payment took the form of goods or slaves. In the case of murder, the accused might have to pay several slaves to the deceased's relatives, and in addition, a fine to the chief for spilling blood, consisting perhaps of one slave. The amount of compensation expected was mentioned by the plaintiff in the case. One of the expressions used was, "My compensation must cover an ant hill," meaning enough slaves, standing hand in hand, to surround an ant hill; ant hills in this country are sometimes very big. If a man had no slaves, he would send his relatives or he himself might be forced to become the slave of the plaintiff. There is a saying anent this practice: 685 681 539

Chitumbili wachitowile mchila wakwe!
The monkey they tied (with) tail his (own).

Slaves passed over to a man in payment for crime became free men; they were an addition to the village and might even be adopted in place of a murdered individual. 567

When compensation was made by the defendant to the plaintiff, the latter always returned some part of it as a sign that friendship was again established.

Goods or money received in compensation for murder, i.e. blood money, might not go for the purchase of food or clothing. Detection of a guilty party by means of magic and proof of guilt or otherwise by ordeal poison are dealt with elsewhere.

Bluffing anyone into giving something for nothing, obtaining goods by false pretence, was not considered a crime, as anyone was "fair game." For instance, a party of youths would waylay a man with a load of fish, saying they had been ordered by their headman to commandeer it. If the man parted with his fish, so much the worse for him; if he showed fight, he was respected and friendship made with a give-and-take of fish and snuff. Such bluffing is called *kulpa nsuso*, "to eat with them." To add to their appearance of *bona fides*, the party might have secretly borrowed some well-known article belonging to their headman. 674

3: Stanous D-5 (ca. 1912) 1922 FT7 Yao FT7

This has led to the word being translated as Bright's disease (Hetherwick). No symptoms referable to the pudenda are included under this disease. *Mwera* (Chin. *Kapunda*): hydrocele; said to be another sequela. A woman soiled by the excrement of her infant after birth is not considered unclean and intercourse will have no ill result to the husband. Sometimes in the event of *Apali ni chilwala*, recourse is had to the practice of intercourse between the woman and some other man. She is thus rendered "clean" and the man who is not her husband will not sicken. Such a man is called *Lituwa* (see *Widowhood*). 164 192 753 688

Lusse: a disease similar to *Chingwa*, which inflicts a man having coitus with his wife who has not been cleansed after abortion.

Kusinimula: a practice indulged in if a new-born child falls ill; the word refers to the "hardening" of pots when they are being made and the same idea is applied to the child. If the new-born child gets fever, the illness is ascribed to the *carunculae myrtiformes* about the vulva of the mother. These are cut off by an old medicine-woman and the blood allowed to drop into a mortar; water and some leaves are added and pounded together, and the mother attired only in a cloth reaching to the loins, washes her breasts with the liquid while the baby is supported on she thigh; the child is then given the breast and the mother, turning her back on the mortar, pushes it over backwards with her buttocks.

Ya njete (from salt; Chin., *das mchere*): If a woman who, after the death of a child, has not been cleansed by medicine, adds salt to her husband's food, he eating it will sicken.

Tsempo (a Chinyanja word): If a man or a woman commits adultery and any member of the family falls ill, the natives say the illness is due to the unlawful act; the sinner is said "to have gone in front of the other"; *kwapunda* (*wapambana*, Chin.), "he has gone in front of," from *ku-punda* and *ku-pambana*, to go in front of, or *ku-ampha* (Chin.), to go slyly in front of. Hence the word *tsempo* which also is used loosely for *das mchere*. If a child who according to custom has gone to stay with the grandmother, returns to the parents' house and the parents continue to have sexual intercourse, the child may sicken; it is said that the house is "hot" for the child and its disease may be called *tsempo*. Or if a child which has been weaned is again given the breast after the mother has resumed cohabitation with her husband, it may sicken with *tsempo*. And the husband is called *kwapunda*.

A child which is suckled after menstruation is reestablished, is not affected by any untoward symptoms.

In the event of a woman dying in childbirth, if it so happens the husband has committed adultery, he is held responsible for the death and her relations claim very heavy compensation. [684]

Ku-simwilwa, to be met with (*ku-kumwilwa*, Chin.): if the act of coitus causes the onset of menstruation and the husband cannot draw back in time to prevent himself being contaminated, he will sicken, and he is said "to have met with (it)" when referring to his illness. In this disease, the penis is said to withdraw into the bladder. Soot from the roof

genous group, in which his jurisdiction over one part of the village arises from his position as the warden of a sorority-group, and that which he exercises over the other sorority-group derives partly from his position as a non-matrilineal relative and partly from his own personal qualities. The warden of the second sorority-group is the headman's own son and it is he who takes over all the functions proper to that position, but the successor to the headmanship is a man's sister's son, usually, though not invariably, the first-born son of the eldest sister. Each village headman in turn brings his wife to live in his village and each headman's wife in turn tends to set up a fresh group which is of a different lineage affiliation from that of the headman. In addition to this the warden of the sorority-group formed from the first headman's children tends in due course to live patrilocally and the children of his wife set up yet another foreign group in the village. Hence, theoretically, with each generation the number of opposed groups in a village doubles itself, and in a few generations, were this to continue, the position would become extremely complex. In fact a village of long standing is seen to be composed of a central lineage group to which the headman belongs, and a series of other lineage groups related to the headman's lineage group through one or other of the past and present headmen of that village. Such groups of different lineage make-up are usually mutually opposed and are held together only by the combined influences of a weak patrilineal connexion with the headman's lineage and the personality of the present headman.

This situation is clearly an uneasy one for the headman. His wife is looked upon as a stranger and is often made to feel it. The headman's sorority-group often expresses its hostility and jealousy towards her. The children of the two groups are on no easier terms. They call each other ' cross-cousin ' (*asiwani*) and are expected to marry one another. At the same time the hostility between them is formulated in joking relationships. This critical situation of the headman is made clear to him on the day of his succession. One headman was told: ' As you have got wives, do not listen to what they say. They may be lying. Sometimes they will quarrel with your sisters and say that your sisters have been insulting you. This is false. When you hear these reports you may be unfair to your sisters and the people will say that you have broken your village through listening to nonsense.' Thus when conflicts arise between members of a village the headman is in a peculiar position and it is difficult for him to remain impartial. In such a situation the tendency is to call in an outsider to try to settle the differences. Sometimes these differences are patched up and the village continues as a unit. But, particularly after the death of the first village headman, the tendency is for one of the groups to move away to a completely new area, there to set up a unit of its own.

I quote an actual case to illustrate this procedure:

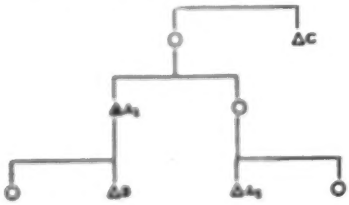

621 'In 1946 village A had about 30 huts in it. A certain man B was the son of the
622 previous headman called A_1 and hence mother's brother's son or cross-cousin of the
578 present headman called A_2. B had two wives living patrilocally and while B was
684 serving in the Army he had a letter from one of his sisters (i.e. his mother's brother's daughter or cross-cousin to the headman) to say that A_2 was sleeping with B's wives. When B returned he started making inquiries from his wives and he eventually secured a confession from them. B then went to a man called C, who stood in the relationship of mother's brother to the original A_1 and complained about the behaviour of the village headman. C also instituted inquiries and ascertained that it was true. C then approached a local headman of some standing (whom I shall call D) and asked him to arbitrate in the case. D pronounced A_2 guilty and awarded compensation of £6. 10*s*. to B. B, however, refused to take the money, and said that he wished to leave the village. D observed that he had every right to do this and that A_2 had no right to complain 'since he had broken the village himself'. B took his sorority-group, who occupied about twenty of the thirty huts, to a place about thirty miles away and set up a village of his own. The sorority-group of the village headman A_2 remained behind in the old village.'

This case illustrates the points that I have made. It shows how the two groups in this village stand opposed to each other in that B's sister wrote to tell him of A_2's conduct. Also when the village did break up it did so along certain very clear lines of genealogical relationship. Second, it illustrates the operation of the desire for dependants in that B refused what by Yao standards is a very large sum of money for compensation and preferred to move off and establish a village of his own. This attitude is also shown by the arbitrator who takes the point of view that regrettable as it is, the village must in the circumstances split, and while he appreciates the headman's feelings he makes it clear that the headman has no one to blame but himself. Third, it is interesting to note that this split took place after the death of the old village headman when the personal ties with both opposed groups were severed. Though the new village headman A_2 assumes the kinship terms of his predecessor and also calls the children of A_1 'children' yet in fact he is their cross-cousin while the old village headman was their father.

622 The position of the village headman in Yao social structure may be summarized
554 thus: the village headman is the leader of a group which may be a simple kin-group
621 or a composite group of two or more opposed matrilineages linked to each other through himself or one of his predecessors whom he represents to them. The numerical size of the village determines the status of the headman, but the size that it can reach is limited by an immanent instability in the kinship structure which is expressed, in terms of their status system, first, in the competition of brothers for the wardenship of the sorority-group, and second, in the competition between the headman and the wardens of the patrilineally linked sorority-groups, who wish to set up villages of their own.

621 The Yao see villages as units and this is clearly shown at the initiation ceremonies
881 of boys, when the initiates are kept in grass-sheds, each partition of which refers to a particular village. In the same way a person is identified as belonging to a particular village known by the name of the village headman. Thus a man might say: 'I come from Kumpumbe's village.'

766 by his relatives. For the feasts during the mourning at a chief's death the food is acquired by institutionalized pillage (*cipinimbe*).
661 The villagers in a chiefdom are often first informed of the death of a chief by the appearance of men from his village. These men are by custom allowed to take from a village any article of food they can find—flour, a goat, some chickens, prepared relish, or whatever is lying around in the village. The owners of the food may not charge them with theft. This food is used in the funeral feast. The excesses to which the chief's men may go became circumscribed after the White conquest. Previously, almost any crime short of murder could be committed under the guise of *cipinimbe*. More recently, owing to Government opposition, it has been restricted to the taking of smaller articles of food, such as flour and chickens. Some people are beginning to object even to this. The chief's funeral is a public affair and all his subjects may attend it. The effect of the *cipinimbe* is to bring together enough food for the chief's funeral feast. Here, as before, the chief's men may not cross the boundary for fear of reprisals, and the effect is to impose a levy in an informal way over most of the villages in the chief's area.

The Chief as a Symbol of Unity

643 The chief is a representative of his people and it is his particular duty to ensure their welfare and that of the chiefdom as
579 a whole. His symbolic representation of the unity of his people is brought out clearly by his right to fines in cases involving bloodshed and arson. Strife and division in a chiefdom in the old days were likely to end in spilt blood and burnt huts so that the Yao associate bloodshed and hut-burning with dissension within the chiefdom.

684 Most other offences are against the individual and not the chiefdom as a whole: the case is brought to the chief so that
685 compensation may be awarded. Adultery and theft thus are definitely civil offences. Nowadays, a fine is imposed, but this is seen to be a White innovation, and the money from it is looked upon as 'Boma' money.[1] In disputes where blood has been shed, however, the chief is entitled to fine the guilty party
682 on his own account. The chief is said to be 'blinded' by the
683 blood and a payment must be made to him before he may 'see'

[1] i.e. Government money.

2: Mitchell E-5 (1946-1949) 1956 FT7 Yao FT7

again. In the past, disputes hinging on murder had this aspect, though they were usually settled by a feud. Nowadays, of course, all murder cases are lifted altogether out of the hands of the chief, but the special fine for bloodshed is still levied in cases of assault. When a man is convicted of assault in the chief's court he will have to pay three separate amounts: one to the victim as compensation, one as a fine to the Native Treasury, and one to the chief 'so that he may see again'.

A similar provision applies to cases of arson. When a case is brought to the chief because a man has burnt another's hut, the chief will say that the guilty man has 'brought a torch into his country'. The man convicted of arson will have to pay a special fine to the chief in the same way as the man who caused bloodshed. The association of the unity of the chiefdom with fire probably has some place in the attitude of the chief here. People who have come to a chiefdom as strangers are said to have come to 'seek the chief's fire',[1] and all the fires in the chiefdom are supposed to have been kindled from one flame. This expresses the unity of the chiefdom: the burning of the hut, therefore, symbolizes the introduction of discordant elements, as well as being a serious crime in itself.

The Chief's Judicial Functions

It is clear from MacDonald's writings that in pre-White days the chief settled most of the serious disputes in his chiefdom. Nowadays, this function of the chief has been given legal sanction under the Native Courts' Ordinance of 1933. 'A' grade courts have the power of imposing fines not exceeding £5, or 6 months' imprisonment and 12 strokes whipping; and 'B' grade courts may impose fines not exceeding £1 and imprisonment including hard labour not exceeding one month, but not corporal punishment. The Native Authorities, Jalasi, Nyambi, Kawinga and Liwonde, all have 'A' courts; the Subordinate Native Authorities, Chikweo, Ngokwe, Chiwalo, Chamba, Mposa, Mlomba, Stora, have 'B' courts. Only a certain proportion of disputes is brought for trial in these Native Authority courts. This is because, firstly, the Administration does not admit the legality of some disputes. Most of these centre on charges of witchcraft,

[1] A similar view of fire in the village context is discussed in Chap. V, p. 112.

2: Mitchell E-5 (1946-1949) 1956 FT7 Yao FT7

621 identity of villages more clearly seen than in the arguments that
423 arise over rights over waterholes. These are usually dug next to a stream or a marsh, or in some other place where the water will percolate into them. The physical labour of digging a waterhole establishes the rights to it, and a village retains these rights if at some time in the past any of its members had dug it.

621 In normal years, and of course during the rainy season, there
423 is enough water for all and no friction arises, but in drought
●685 years difficulties arise. Friction between Nampeya and Cikuwita arose in this way in 1933.
622

During the dry season the waterholes that were normally used were drying up and the people of Nampeya decided to open up a disused one. When Cikuwita's people saw Nampeya's people using it they came to use it too. Nampeya's women saw this and told the other people they had no right to use the waterhole. Words passed between them and eventually there was a tussle between the two groups, during which a waterjar of one of Cikuwita's women was broken. Cikuwita's women said they would take the case up to Ntibwilibwi, a headman of local importance, and when they returned to their village they complained to their headman who took the complaint to Ntibwilibwi. He sent a message to Nampeya to arrange a date on which the dispute might be settled. On that day the members of the two villages gathered at Ntibwilibwi's hut. The dispute was settled amicably: the person who broke the waterjar was ordered to take a chicken and give it to the owner of the jar, and Cikuwita was told to gather his people the next day and make them dig a waterhole of their own.

The villagers in each of these situations had acted with regard to their fellows primarily as members of villages. They had seen themselves as members of corporate groups and had interacted as such. In the dispute in which the jar was broken, the individual responsibility was fixed and compensation awarded, but at the same time the village headman was instructed on behalf of his villagers to make a new well and thereby ensure peace in the future. In all these disputes, however, the headman had appeared as the responsible representative of his village.

2: Mitchell E-5 (1946-1949) 1956 FT7 Yao FT7

the arbitrators awarded 30s. compensation to be paid by Cilimba to Cikoja, less 5s. owing. This money was to be paid to Ayesi in compensation for the loss of her baby. Ayesi, however, refused to accept the money because she said she wanted to have her baby. The matter now became an intra-segment affair and Cikoja, Amidu, Kanyenga and Kaifa (F36), the son of Ayesi, with Bt. Amisa had a meeting on what to do. Ayesi was quite adamant about it. There was nothing to do but to drop the matter, and the state of tension between the segments remained as it was before.

The next incident occurred in 1943. Mpulula, the husband of Bt. Amisa, had some goats. One day two of them strayed on to the verandah of Bt. Madi's hut. Bt. Madi (F10) was the daughter of Asuna (F2) and a member of the senior lineage segment. One of the goats nosed its way into a basket of flour that was lying under the verandah and started to eat it. Bt. Madi came out and picked up a log that was lying nearby and threw it at the goat. It broke the goat's leg and the goat had to be destroyed. The owner, Mpulula, who was watching at that moment immediately rebuked the woman. He went and reported the matter to Cikoja and he sent a message to Mpulula's marriage surety who sent back to say that they would meet at Chiwalo's hut the following morning. The arbitrator in the case finally decided that the correct action should have been to take the goat to the owner and to lay a complaint against him. As it was he had to award compensation of 30s. to be paid to the owner of the goat. Mpulula, however, refused to take the money. He argued that although the goat was his, so was the offender.[1] He said that he was afraid of sorcery so he would take a token amount of 3s. only. Cikoja gave him this.[2]

A few months later the eldest child of Bt. Bwana Isa (F16) suddenly fell ill and died.[3] Kanyenga, Kaifa and Msusa went to the diviner. Kaifa, the son of Ayesi, went as the headman's representative. Kanyenga went as the warden of the sorority-group, i.e. the child's mother's brother. Msusa was the marriage surety of the child's father. Kanyenga consulted the diviner who indicated that Kanyenga's mother Bt. Amisa was responsible but that she was not a sorceress. Sorcery, he said, was introduced by an unknown person who was using Bt. Amisa's grumbling as a screen. Kanyenga refused to accept the finding of the diviner, saying that his mother had never been 'caught'

[1] His wife's collateral sister's child he also calls 'my child'.

[2] Mpulula is a stranger in the village and in this situation Cikoja represents both segments to Mpulula, even though the senior segment is guilty.

[3] Sudden illness, called *cikoma* or 'the hammer', is believed to be without a doubt due to sorcery.

3: Stanzus D-5 (ca. 1912) 1922 ??? ??? ???

for witchcraft were carried out by strangling with a piece of calico at a place appointed for the purpose some miles from the chief's village. 674 696

There was no case against a man who seduced an unbetrothed girl, the latter being considered entirely at fault. 684

After divorce, the children always remained with the mother. The man left his wife after the case, saying, "I will take my spear and some of the goats and chickens, but the children will always know their father." 586

Murder was a question of compensation to the deceased's relatives and was not punished by death. 682

Stealing was a serious offence but many who were found guilty were rather despised than punished. The thief with the stolen goods tied about his body but otherwise stripped naked would be driven through the village and prodded with sticks to the sound of drums and hoots of derision. Most crimes, however, might be punished by exacting compensation. Payment took the form of goods or slaves. In the case of murder, the accused might have to pay several slaves to the deceased's relatives, and in addition, a fine to the chief for spilling blood, consisting perhaps of one slave. The amount of compensation expected was mentioned by the plaintiff in the case. One of the expressions used was, "My compensation must cover an ant hill," meaning enough slaves, standing hand in hand, to surround an ant hill; ant hills in this country are sometimes very big. If a man had no slaves, he would send his relatives or he himself might be forced to become the slave of the plaintiff. There is a saying anent this practice: 685 681

> *Chitumbili wachituwila wakwa!*
> The monkey they tied (with) tail his (own).

539

Slaves passed over to a man in payment for crime became free men; they were an addition to the village and might even be adopted in place of a murdered individual. 567

When compensation was made by the defendant to the plaintiff, the latter always returned some part of it as a sign that friendship was again established.

Goods or money received in compensation for murder, i.e. blood money, might not go for the purchase of food or clothing. Detection of a guilty party by means of magic and proof of guilt or otherwise by ordeal poison are dealt with elsewhere.

Bluffing anyone into giving something for nothing, obtaining goods by false pretence, was not considered a crime, as anyone was "fair game." For instance, a party of youths would waylay a man with a load of fish, saying they had been ordered by their headman to commandeer it. If the man parted with his fish, so much the worse for him; if he showed fight, he was respected and friendship made with a give-and-take of fish and snuff. Such bluffing is called *kulya nasu*, "to eat with them." To add to their appearance of *bona fides*, the party might have secretly borrowed some well-known article belonging to their headman. 674

2: Mitchell E-5 (1946-1949) 1956 FT7 Yao FT7

436 calico currency was an impossibility.'[1] The Africans could hardly have resisted the change over to a money economy. The taxation system introduced in 1893 was based on the Governor of
436 Zululand's Proclamation III of 1887, and ruled that a tax defaulter
651 was liable to be conscripted for labour until he had earned the
687 amount of his tax. Coffee estates owned by Whites in the Highlands were at the same time in need of labour.[2] Tax was then taken in kind but it was soon changed to cash as a further inducement to Africans to come on to the labour market. The Africans were forced into the cash economy of the Protectorate even if they were unwilling. The measures were so successful that in 1899 the *Gazette* announced that the labour market in Blantyre was flooded.[3]

Modern Economic Structure

177 In modern Nyasaland, the wants of the Africans have become even more varied than they were in the earlier days. Most younger
511 men wear European-type clothing and shoes. Many own bicycles and sewing machines. Many houses have glass windows and panelled doors and most of them are furnished with some rough furniture which has been bought from local craftsmen. Many have beds and mosquito nets. Few women cannot boast of enamel dishes to replace their clay pottery or china cups to replace drinking gourds. The food habits of the peoples too have broadened. Most households use sugar these days, and many people drink tea. I should say that all households occasionally buy soap. Certainly all need salt, which formerly was burnt from the saline grass around Lake Shirwa or dissolved out of special soils in Portuguese East Africa. The stock-lists of an Indian-owned village shop in Chiwalo's area and of an African-owned canteen in the same area, which I have set out in Appendix A, indicate the range of the wants of the modern African.
434 It is clear that these wants are over and above food require-
463 ments. The people in these tribal areas live primarily on the

[1] *Report of the Consul and Acting Commissioner Sharpe on the Trade and General Condition of the British Central African Protectorate for April 1896 to March 1897.* C. 8438.

[2] See the *B.C.A. Gazette*, iii, 5 (March 1895), and iii, 17 (Sept. 15th, 1896), which print advertisements offering 'native labour arranged for and supplied to plantations at a commission of 7*s.* 6*d.* a head'.

[3] *B.C.A. Gazette*, vi, 6 (June 24th, 1899).

2: Mitchell E-5 (1946-1949) 1956 FT7 Yao FT7

175 565 622 643

2. Free men are under their elder brother in the first instance, but they may carry their cases to the headman of their village or even to the chief of the country.
3. Slaves were entirely under their own master.[1]

The headmen's subservience to the chief is described in the following passage:

> In all public transactions the headman represents his village. He receives the chief's orders and sees them carried out. When he kills an elephant he sends one of the tusks to the chief. Should he kill twenty elephants he is not expected to give up twenty tusks—two or three would be sufficient. If he shoots a large buck he gives one haunch of venison. For all such tributes he expects to receive in return a present (generally a little powder). . . . He is expected to attend the chief's parliament unless he is under an elder brother in which case he is not allowed to speak, except when especially commissioned. Headmen are expected to report all cases of war, but they often attack enemies without telling their chief beforehand, saying, 'Let him hear of the enterprise when it succeeds.' Yet this is dangerous unless they are sure of success, and well acquainted with the chief's private sentiments. On reporting an attack they present the chief with part of the booty. In times of war each headman when summoned, must follow his chief's flag, otherwise his village is burned down, and all that fail to escape are killed or enslaved.[2]

[651] [646 593] [721] [687]

175 578 622 643

Yet within the framework of this organization villages were markedly autonomous. MacDonald's description, which I have just quoted, brings this out very well. Elsewhere he writes: 'The chief may often have less influence than powerful headmen, and we have known cases where he simply contented himself with grumbling when his headmen acted contrary to his desire.'[3] The chief did not differ greatly from his more powerful headmen. A certain amount of ritual in terms of ancestor worship embellished his position, and he had some ascendancy over village headmen to whom he had given land. Yet, in the last analysis, the chief had to rely on his personal following and military power to subjugate headmen who were becoming too powerful. The chief was therefore in direct competition with his subject village headmen, and involved in a constant struggle with them for followers. MacDonald describes how the chief himself was a

[1] MacDonald, *Africana*, i, 155.
[2] MacDonald, *Africana*, i, 157.
[3] MacDonald, *Africana*, i, 155.

2: Mitchell E-5 (1946-1949) 1956 FT7 Yao FT7

Native Authority, to the Native Authority, and eventually to the District Commissioner if the case is one which he will countenance. In practice, most cases reach the chief and go no further. Most people accept his decision. Thus the chief has important judicial functions. 692 643

The Chief as his People's Representative

In special situations where the welfare of the chiefdom as a whole has been endangered by an infringement of the mores, the chief may take action. For example, a chief prosecutes a village headman who allows a woman in his village to bear her first child before she has been through the *litiwo* ceremony. Every woman who becomes pregnant for the first time must undergo this ceremony, during which she is instructed in child welfare and child care. If she bears a child without undergoing the ceremony, she is said to have 'spoilt the country' (*ajalwice cilambo*), in the sense that she has besmirched its reputation.[1] 643 687 843

Chiefs usually call in magicians 'to smell out' those responsible for keeping back the rain.[2] When the rains fail as they did in 1948–9, their failure is held to be due to the magic of some evilly disposed person. It then becomes the chief's duty to call in a magician to indicate who this person is. The fees for this duty are paid by the chief himself on behalf of his people. 643 787 821

The chief also acts as a representative of his people when they are affected as a whole. For example, Nyambi called in a magician after man-eating lions had taken some of his subjects. This magician called for the hearth-stones and domestic utensils from all the villages in the area, and built them up into a pyramid over which he made some anti-lion medicine. This was to clear the whole chiefdom of man-eating lions. 643 789 731

Nowadays, the chief's representation of his people is seen most clearly in his position in the Administrative framework.[3] The chief represents the Administration to his people since they approach it through him. At the same time the Administration clearly treats him as the representative of his people and consults 643

[1] I was told in Mponda's area that the women undergo this ceremony *after* the birth of the child, but that it is still obligatory.

[2] *Kutawa ula*—lit. 'to tie or bind the rain', in the sense of to make it a prisoner.

[3] I have dealt with this aspect more fully in 'The Political Organization of the Yao of Southern Nyasaland'.

.3: Stannus D-5 (ca. 1912) 1922 FT7 Yao FT7

164 *Mangengolosi:* round-worm of dogs or found in the ground.
753 *Wakengwe wajumu:* a barren woman (lit. dry).
192 *Chinungula:* sterility in the male.
Chinyungula or *gojo:* an impotent man or *Mundu jwa ipuyo:* a useless man!
Mpuli: impotent.
Mchese (*ku-chera* = to cut off): a "cut man"; a man soon after he has been castrated.
Mtonga: a eunuch after he has become fat.
Namtundira (*nalimwimwi* Chin.): the word is derived from *kutunda*, to micturate. Natives say that when disturbed, the insect of this name which is a locustid, *Euschiopsis durandi*, makes water which falling on the skin of the passer-by causes ulceration. I have seen a variety of cases of extensive ulceration due to syphilis, etc., assigned to the effects of this insect; I have, however, shown that it does secrete a corroding fluid from pores at the sides of the body which dropped on to the skin will dissolve the superficial layers of the epidermis and should such abrasions become infected, ulceration may, of course, result.
Utendeu: tremor, similar to the movements of one of the wasps.
Manjenje: tremor of old age, *paralysis agitans.*

164 The preceding short list of words will give some idea of the richness of the language in
192 some directions and also its limitations. There now follows an account of diseases which are
753 based on superstition, generally connected with the idea of uncleanness or the transgression
688 of some rule of life. Whatever the symptoms, if there has been a transgression, the disease is labelled with the name of the disease supposed to follow the act. Similar diseases are to be remarked among the other tribes in the country; some of those relating to the Anyanja I have already mentioned,[1] and the following may be read as an amplification of the remarks previously made.

Chinyera (*Kanyera* Chin.) from *kunya*, to defecate: At the birth of a child, if the contents of the bowel (meconium) are passed before the body is born (as often happens in breech presentations), the child is said to be "born with disease." One of the women attending the confinement will always go out and inform the husband of what has happened, saying, "*Apali 'chenene,*" (it is born well) or "*Apali ni chihwale,*" (it is born with disease). This only refers to the passage of meconium and not to any antenatal disease.

When this significant event has happened, the husband may not occupy the same sleeping mat as his wife and have intercourse with her until the child of its own accord crawls from the mother's sleeping mat to that of her husband on the other side of the hut; *Ku-pitisya muanache ku magono* (*Ku-pititsa mwana ku mpasa*, Chin.) = "to go the child to the mat." Should the husband disregard this custom, he will sicken with *Chinyera*. The symptoms commonly ascribed to *Chinyera* are pain in the loins and in the hypogastrium.

[1] 'Notes on some tribes of British Central Africa,' op. cit.

3: Stannus D-5 (ca. 1912) 1922 FT7 Yao FT7

This has led to the word being translated as Bright's disease (Hetherwick). No symptoms referable to the pudenda are included under this disease. *Mwera* (Chin. *Kapundu*): hydrocele; said to be another sequela. A woman soiled by the excrement of her infant after birth is not considered unclean and intercourse will have no ill result to the husband. Sometimes in the event of *Apali ni chilwala*, recourse is had to the practice of intercourse between the woman and some other man. She is thus rendered "clean" and the man who is not her husband will not sicken. Such a man is called *Litunu* (see *Widowhood*). 164 192 753 688

Lungo: a disease similar to *Chinyera*, which inflicts a man having coitus with his wife who has not been cleansed after abortion.

Kusisimula: a practice indulged in if a new-born child falls ill; the word refers to the "hardening" of pots when they are being made and the same idea is applied to the child. If the new-born child gets fever, the illness is ascribed to the *caruncules myrtiformes* about the vulva of the mother. These are cut off by an old medicine-woman and the blood allowed to drop into a mortar; water and some leaves are added and pounded together, and the mother attired only in a cloth reaching to the loins, washes her breasts with the liquid while the baby is supported on one thigh; the child is then given the breast and the mother, turning her back on the mortar, pushes it over backwards with her buttocks.

Ya njete (from salt; Chin., *dzu mchere*): If a woman who, after the death of a child, has not been cleansed by medicine, adds salt to her husband's food, he eating it will sicken.

Tsempo (a Chinyanja word): If a man or a woman commits adultery and any member of the family falls ill, the natives say the illness is due to the unlawful act; the sinner is said "to have gone in front of the other"; *kwapunda* (*wapambana*, Chin.), "he has gone in front of," from *ku-punda* and *ku-pambana*, to go in front of, or *ku-sempha* (Chin.), to go slyly in front of. Hence the word *tsempo* which also is used loosely for *dzu mchere*. If a child who according to custom has gone to stay with the grandmother, returns to the parents' house and the parents continue to have sexual intercourse, the child may sicken; it is said that the house is "hot" for the child and its disease may be called *tsempo*. Or if a child which has been weaned is again given the breast after the mother has resumed cohabitation with her husband, it may sicken with *tsempo*. And the husband is called *kwapunda*.

A child which is suckled after menstruation is reestablished, is not affected by any untoward symptoms.

In the event of a woman dying in childbirth, if it so happens the husband has committed adultery, he is held responsible for the death and her relations claim very heavy compensation. [684]

Ku-simanihwa, to be met with (*ku-kumanidwa*, Chin.): if the act of coitus causes the onset of menstruation and the husband cannot draw back in time to prevent himself being contaminated, he will sicken, and he is said "to have met with (it)" when referring to his illness. In this disease, the penis is said to withdraw into the bladder. Soot from the roof

3: Stannus D-5 (ca. 1912) 1922 FT7 Yao FT7

164
192
753
688

of the hut, *chanjiola*, and the red part of the flower of the banana, doubtless on account of its shape, are used as medicine for this disease.

Kwimbangana or Ndaka: If a man dies and his relatives eat of the food-stuffs left by him, such as corn from his grain-store, before they have been cleansed by medicine, they will sicken with ndaka, the symptoms being anaemia and wasting. The word *kwimba ndaka* is also used for sickness due to partaking of food cooked by an unfaithful wife.

Chipata is a word used by both Yao and Anyanja to denote a disease which a man contracts from adulterous intercourse. Scott[1] derives the word from *ku-pata*, to stick to; the woman is so influenced by medicine made by her husband that should any man have adulterous intercourse with her, the disease will "stick" to him, while it will not affect the woman herself nor her own husband. Both the disease and the medicine made to cause the disease are known as *Chipata*. Secondarily, the word has come to be used for any disease which may be gained by sexual intercourse and is sometimes used as a general term for venereal diseases.

Chipata cha chipula (*chipula*, a knife): A man who is going away from home obtains medicine and doctors his knife with it. As he leaves his house to go on his journey, he pretends just to remember his knife and calls for it. His wife brings it to him and it is put into its sheath; he then goes out and sticks it in the grass of the roof of the house. The medicine is made from the tail of a dog, an animal in which coitus is prolonged and the two animals cannot separate. Should the wife commit adultery, it is supposed that just as the knife was unsheathed and doctored with dog medicine, so the adulterous pair will remain fixed *in coitu* and be found out. This may be called *chipata cha kutapa* (*kutapa* — to set a trap).

The Anyanja make medicine with the same idea, *chipata cha kuchera* (*ku-chera*, to set a trap, Chin.); medicine is put round the house and any man crossing the medicine and committing adultery with the wife will be trapped. In all cases, the man will become ill.

Chipata cha miasi, *miasi*, blood (*mwazi*, Chin.); disease caused by intercourse with a menstruating woman. Blood is passed in the urine.

Chipata cha usou, *usou*, pus (*mafinga*, Chin.): practically means gonorrhoea.

Chipata cha kitanji, *kitanji*, cotton (*tanje*, Chin.): the discharge from the urethra resembles a thread of cotton; it is supposed that this thread can be pulled out endlessly.

Chipata cha uchacha, *uchacha*, the white-ants (*chiuwe*, Chin.): so called when a man passes whitish-yellow debris in the urine. It is supposed that when he has finished passing water, [925] white ants rush up the penis and enter the bladder, thus causing the pain which characterises this affection. The origin of the idea lies in the fact that if one sprinkles water or urinates on the ground near white-ant burrows, the ants will come to the surface of the ground in numbers and make a rustling sound.

[1] D. C. Scott, A cyclopædic dictionary of the Mang'anja language, op. cit.

3: Stanaus D-5 (ca. 1912) 1922 FT7 Yao FT7

Other hypothetical diseases which are caused by disobedience to custom are mentioned under various other headings. *Kosipa:* a disease generally characterised by ulceration of the legs but in some cases by pains in the back, or loosely used for a variety of symptoms, is said to be caused by the entry into the body of a worm which lives in water-pools. This worm which I have had identified is a gordian worm and not known to be parasitic in man. *Luasi:* When a man kills another in battle, he will slit open the belly of his victim; otherwise he believes he will sicken with *luasi* and his own belly will swell up like that of the corpse when putrefaction sets in. He is supposed also to hunger after more killing and blood. *Likango* is the name of a supposed disease which kills off one child after another in a family when they are about six months old. Congenital syphilis naturally suggests itself but I have never been able to verify this idea. *Likango lya kutula:* a supposed disease which causes the death of the first child when the second is born, the second when the third is born and so on, whatever the intervals between the births. Each child is said to push (*ku-tula*) the previous one out of this world. Under these circumstances the disease is ascribed to something wrong with the mother or father and they are examined by a medicine-woman or medicine-man, and any carunculae or an external pile found will be cut away.

If a snake inflicts two bites, the case will prove fatal. If a crocodile emits a grunting sound when seizing its victim, though he escape he will certainly die.

Treatment of disease. Of surgical treatment there is very little to be noted. Nothing in the way of operation is performed with the exception of circumcision (see *Lupanda*).

An abscess is allowed to burst, the smallest tumor is left untouched, but accessory digits which are not rare, attached only by a fine pedicle, are snipped off.

The natives cannot extract teeth. They are incapable of rendering any assistance in cases of difficult labor. Dislocations are not recognized as such, but fractures are treated by the application of wooden sticks placed at intervals round the circumference of the limb parallel to it and held in position by twisted pieces of bark string (Pl. XXII, fig. 3). The principle of the tourniquet appears to be unknown.

The only instruments used consist of a small knife for incision, a cupping-horn, and a primitive form of funnel for administering enemata (Pl. XXII, figs. 1, 2, 4). The knife has a triangular blade with a stem which is commonly twisted at one of the corners. The knife is used for wet-cupping, tatooing, and circumcision (Pl. XXII, fig. 2). The cupping-horn is a small horn of a calf. The apex is pierced and after application to the part, suction is made with the mouth and then the hole sealed by working a piece of beeswax over it with the tongue. Six small incisions are made in the skin for the withdrawal of the blood. The cupping-horn is called *chawi* (*tulumika*, Chin.). Cupping is used for headache and for pain in the chest and back. The enema funnel, *chipolya* (*ntimbiri*, Chin.) is made from the neck of a gourd to which is attached a hollow straw for introduction into the anus. Half a pint of an infusion of *mungwia* is injected for constipation associated with pain.

622 hut of one of Meya's wives. Meya's sister wrote a letter to tell him
558 of this and he replied that he could do nothing until he returned.
837 In 1946, Meya returned to be demobilized. The third night after his
166 return he questioned his wives about their fidelity during his absence. They at first held out against him but before long he intimidated them into admitting that they had slept with the village headman. Meya now went to complain to Mapata, who was Cikumba's perpetual mother's brother, and he said that he would come to the village the next day.

When Mapata came he confronted Cikumba with the accusation. Cikumba denied it until Mapata called the women. When they confessed Cikumba was forced to admit his guilt. Mapata now decided to call in an arbitrator, Isa, an important but unrelated headman who lived close at hand. Isa said he would come the following day when the matter could be thrashed out. When Isa and Mapata came they asked the women about the affair in public. They admitted the charge and Cikumba did not deny it. Isa then remonstrated with him for being a bad man and said that he was ashamed to hear about it. Cikumba had to pay £6 10s. to the injured man, Meya, who, however, refused to take it. He argued that Cikumba ought to have behaved as a father to him. But Cikumba had not. He, Meya, could not remain living in the village because his wives would be as Cikumba's wives. Isa said that he could not object because Cikumba had caused the trouble and had broken the village himself. How could he complain? Meya took two-thirds of the huts in the village away with him.

The Headman as a Representative of a Corporate Group

622 The headman is not only responsible for keeping the peace
689 between the members of his village, but he is also supposed to control his members in their relationships with other villages. If members take corporate action against other villages, even if they do so without the consent of the headman, the chief will consider the village headman responsible. This was brought out clearly in the relationships between Cikoja, Mapata and Masimbo in Chiwalo's section.

622 Cikoja and Mapata are two of the more important headmen in
689 Chiwalo's section. Masimbo is a minor village headman who lives
423 in Mapata's village area. The quarrel arose over the [illegible] of
226 fishing rights in a small pool lying between the two ma[illegible]s. This pool was excavated by Cikoja and his villagers in 1924 d[illegible]g

2: Mitchell E-5 (1946-1949) 1956 FT7 Yao FT7

a severe drought, and he claimed the rights over it. One day in 1930, some boys from Mapata village came down to the pool with fish-poison. At about noon some boys from Cikoja's village arrived with their traps. When they saw the Mapata boys using fish-poison they told them to desist and tried to take away the fish. This led to a fight in which knives were drawn. One of Cikoja's boys ran back to tell him, and in anger he came down to the pool with some adults. The Mapata boys now ran back to Masimbo who immediately assembled some men and came to the assistance of the Mapata boys. The two groups joined battle immediately and there were casualties on both sides. Mapata heard about this and came running down to separate them. 622 689 423 226

The next morning they took the dispute to Chiwalo. He started by asking why Mapata had used fish-poison in someone else's pool without permission. Mapata replied that he did not know that his boys had gone down there. He said that Masimbo had told him about the conflict and that he had gone down to stop it. He was not aware of it before. Chiwalo now turned to Masimbo and said, 'Masimbo, you are in the wrong. You have caused the children to suffer. You went to make war because of your children. The people of Mapata, they are in the wrong because they did not report to the owner of the pool.' 622 689 423

When Cikoja was asked if he had anything to say he only replied that he was ashamed of what had happened because he was the first in the area, and until then they had been friends. The conflict had arisen because the children had done something which they did not know was wrong.

Chiwalo ordered Masimbo to pay 5*s.* and Mapata 6*s.* to Cikoja. He then told Cikoja that he should brew some beer and share it with the other two villages so that friendship might be restored and the children might go from village to village without fear. The chief's instructions were carried out and normal amicable relationships were re-established.

The way in which the villages acted as corporate groups is well illustrated by this incident. The responsibility of the village headmen for the activity of their members also emerges. The chief found Masimbo in the wrong for causing the fight, but he also fined Mapata because his boys had used fish-poison. The fines were paid by the village headmen, Masimbo and Mapata, to the village headman Cikoja, for they are the representatives of the corporate groups under them. 622 689

In no other field of village relationships is the corporate 621 423

The w'mikile then gets off on the left side, his assistant on the right and they stand in the shallow depressions. The w'mikile starts asking riddles; he says, "*Ndewi* (riddle)!" and is answered by his assistant "*Jiiche* (let it come)!" Here is one: 881 533 539

"*Kanguru, hapile pansi!*"
"The little mouse it has defeated, it has gone into the ground!"
Answer: "*Michipi!* (roots)!"

He then goes round the crowd for the answer — if they cannot guess, they say, "*Ali sapena,*" "it is yourself (to answer)." There are hundreds of such riddles.

The w'mikile points to the tusks depicted in the *chisapo* and tells the people, "Long ago this used to be an elephant; look at the tusks." The hump at its back he tells them is the same as *ching'undung'unda* which they will find farther along.

They pass next to *mbunda*, the zebra; a pair, male and female, is always figured.

"*Ajiji apati mbunda ja mbuje Achilemala! Yoseye pakuta!*"
"This one is it not the zebra of Mister Mlemala! everything (is) beautiful!"

Sometimes a story is told to show that the zebra used to go to the sea to drink but seeing the whale, he ran away and came to the country of the python.

Then to *ato*, the python; he sings:

"*Anaato kwijinji! pawa, ejo! Yoseye pakuta!*"
"You python come and answer! all (is) beautiful!"

At the crocodile, *nyama*, he sings:

"*Chanyama ulumba, pawa! ejo! ahapana mungulupulu mani!*"
"Mr Crocodile cleverness, he sleeps at the side of the water!"

At *mwezi*, the moon:

"*Amwezi ulumba, pawa! ejo, amani!*"
"You moon cleverness, !"

Next, they come to *wakiele ukasa*, the people drunk with beer. Two men lie on the ground, feet to feet with nothing on; the *pudenda* are covered with bark-cloth and the whole of their bodies painted with earth and flour to look like two female figures in earth. The song is:

"*Wakiele ukasa: kumbele anamali, wakiele ukasa!*"
"Drunk with beer: come and see the women, drunk with beer!"

A moral is pointed: the disgrace to a woman who gets drunk, lies on the ground, and exposes her person. As the w'mikile makes these remarks, the figures breathe stertorously as a drunken woman would. He conducts the *wali* and all the other people past many of the other images such as *chiwi*, *ngulu*, *ndumunda*, *ukula*, etc., and only stays at those he considers his own special *isapo*. The seven specially dealt with by Mlemala were as above together with *ukulepi*, the sable antelope: [834 689]

2: Mitchell E-5 (1946-1949) 1956 FT7 Yao FT7

and the ease of administering groups with centralized authority. 622
If he agrees, the necessary alteration is made in the tax-registers, 643
and the new Administrative headman is paid his annuity and is 554
called up by the District Commissioner whenever he holds a 648
meeting. To the District Commissioner the chiefdom is made up of the villages on the tax-register, and in a situation of political importance he calls on the headmen of those villages for decisions. For example, when a chief was being installed, the District Commissioner called each Administrative headman forward and asked him whether he agreed to the succession. When the District Commissioner wishes to discuss any matter with a villager he calls forward the Administrative headman. The position of village headmen in the political structure becomes more effective after they have been recognized by Government.

I have no accurate measure of the proportion of all village 622
headmen who are recognized by Government. From my 648
records the percentage of Administrative village headmen out 554
of the total of recognized village headmen is:

	No. Admin. Villages	% of Total recognized
Kawinga	160	84
Liwonde	104	71
Mposa	30	48
Chikweo	48	43
Ngokwe	21	40
Chamba	61	39

I have full records for the smaller chiefdoms, Mposa, Chikweo, Ngokwe and Chamba, but I know for certain that the figures for Kawinga and Liwonde are incomplete. My fullest and most reliable records are for Ngokwe and Chikweo, so that we may estimate roughly that less than half of the village headmen are Administrative village headmen.

Naturally the village headman, whose taxable population will 622
be reduced by the granting of a new 'book', opposes this in the 554
same way as his ancestor opposed the emigration of his village 691
members in pre-White days. In 1947, in Jalasi's area for example, there was an argument hinging on this.

2: Mitchell E-5 (1946-1949) 1956 FT7 Yao FT7

622 554 691 Mlima was a village headman of long standing and had been recognized as an Administrative headman. Ngwaya was a headman who had come to settle under Mlima.[1] After some years Ngwaya felt that because he had his own village he should be given a 'book' and receive money from the Government. Mlima however resisted the claim, saying that his 'book' had been given to him by Jalasi. Both went to Jalasi's court so that the difference could be resolved. Jalasi rejected Ngwaya's claim and upbraided him for being recalcitrant. Ngwaya was fined 9*s.* and ordered to pay £1 to Mlima in compensation.

622 554 643 A rather more complex case brings out the position of the chief, the Administration and the conflict of the prestige-giving principles of historical primacy and White recognition.

691 In 1948, an Administrative village headman, Kalonga, from Nyambi's area, decided to migrate down to the more fertile land along the banks of the Shire River. This land was in Jalasi's area, and it was partially occupied by a minor village headman called Malilo. Kalonga had already selected his site for the village when Malilo came up to him and told him that he was the first in that area and that Kalonga should have asked him to indicate a building site. Kalonga, on the other hand, pointed out that he was an Administrative headman and that Malilo was not, and there the matter rested. In time Kalonga, because of his official position, became better known than Malilo. Malilo was jealous of this prestige and in due course went to Jalasi and complained that Kalonga was 'getting too big for his boots'[2] and that he was only a Newcomer into that area. Jalasi sent for Kalonga.

At the dispute in front of the chief, Malilo reiterated his complaint. Kalonga merely pointed out that Malilo was jealous of his 'book'. Jalasi dismissed the case reminding the two headmen that it was he who was chief of the country. Shortly after this, Kalonga went to Jalasi alone and told him that Malilo had told him that he, Jalasi, was no chief because he should have taken the 'book' and given it to Malilo. Jalasi said, 'It is impossible to change over the "books" which are written by the Whites', and then sent a messenger to bring Malilo to court. When he came he denied the tale and said that as far as he knew the only reason for Kalonga's animosity could be that he had refused to give him the *subaye* greeting. Jalasi informed both headmen that they were to be independent of each other. Malilo

[1] *Kwakulipatika*—lit. one who had made himself a slave.

[2] *Kulikweryo*—reflexive causative of the verb *kukwela*, to climb, i.e. to cause oneself to climb or to exalt one's status.

2: Mitchell E-5 (1946-1949) 1956 FT7 Yao FT7

was to report strangers coming into his village area independently of Kalonga. Nowadays, there is much tension between the two headmen and they summon each other to court on the slightest pretext. The peace is kept only by order of Jalasi. On the whole, however, it is Kalonga who has the higher status and superior prestige.

Unfortunately I have no figures to show how large a village becomes before its headman applies for Government recognition. The average number of tax-payers under village headmen who have just been granted 'books' might have provided this information, but I was unable to collect it. Formerly, they could become Administrative headmen only if they had more than 20 tax-payers under them. Nowadays, however, owing to differential fertility and the reduction in size of villages because of internal dissension, many of the Administrative villages (22 per cent) are smaller than the 20 tax-payer limit. They, however, retain their 'books'. I know that often within the Administrative villages of important headmen or chiefs, there are contained some minor villages bigger than some Administrative villages which are farther away. For example, in Chiwalo's own Administrative village, I know that the villages of Selemani, Ali Kasoka and Ntapasia are larger than many Administrative villages. It is not only the size of the village which allows a headman to apply for a 'book'. It is his relative status in the community. Men of higher rank than Selemani, Ali Kasoka and Ntapasia could probably approach Chiwalo and ask him for a 'book'. But these three are Newcomers. Selemani was a refugee from the Portuguese wars and went to live in Mlumbe area in Zomba district. He came to Chiwalo's area in about 1930. Ali Kasoka moved in about 1940. Ntapasia came about 1921. But they dare not approach Chiwalo himself to ask for a 'book'. Here Chiwalo's rôle of chief is compounded with his rôle of Administrative village headman so that they would be asking Chiwalo voluntarily to reduce the size of his Administrative village. It is only when their villages become conspicuously large that headmen may begin to force the chief's hand. They have always one sanction they can bring to bear on the chief—they can threaten to move out of his area into another chiefdom. The chief may not retain any of his subjects by force. If they express a wish to live in another chiefdom he cannot stop them. On the other hand, useful as this weapon

The chief or any important village headman

[601] is usually addressed by a kinship term, either *baba* (father) or
643 *ambuje* (master or grandparent). When he is referred to, his
622 name is not used. Village headmen are owners or wardens of
554 villages (*aryese misi*) but only those headmen of some standing
178 are referred to as *muenye*.

Important village headmen, like the chief, are in mystical
643 danger from pollution by death. They cannot come to the hut in
622 which a corpse is lying; and they cannot eat the chicken which
554 has been brought to them by relatives of the deceased to announce
761 the death. Like the chief too, an important headman may be buried in a tomb in his village and not in the graveyard.

But an important element in their relationship nowadays is
643 that the Administration will support the chief against a village
622 headman when it comes to a trial of strength, and that a headman
554 these days is precluded by modern conditions from setting up
578 chiefdoms as he did in the old days. Village headmen therefore must struggle for power against their fellows and the chief within
691 the modern Administrative framework. Some attempts are made to resist the power of the chief but these are rarely successful. The dispute between Liwonde and Ndenda illustrates this.

Ndenda was an Nguru headman, who in 1947 had 284 tax-payers under him (Liwonde, the chief, had 186 in his village). Ndenda had come into Liwonde's area before the White invasion and had surrendered with his relative Mlelemba, to Liwonde. The second Liwonde had given him both initiation rights but, unlike his relative, he did not have the right to wear a scarlet headband.

In 1938 or thereabouts, Liwonde decided to move his village site from the Shire River to its present site about half-way up the Great Rift scarp. He sent two of his young men to look for a suitable site, and to plant some mango trees there when they had found one. Ndenda heard of this and sent one of his men to take Liwonde's men into custody. He took their hoes away and then told them to go back to tell the chief they were planting in his (Ndenda's) land. In due course Liwonde moved up to his new site, and asked Ndenda why he had taken the hoes away and whether he owned the country, i.e. was the chief. Ndenda now argued that Mlelemba's ancestors had been given the rights of chieftainship over this area and that the first Mlelemba in the area had given Liwonde some elephant tusks for these rights. Liwonde replied that the chief has a right to tusks and that many had given tusks to him but were not entitled for that reason to rights of chieftainship. Liwonde handled this situation by calling a meeting of the village headmen in the area. They assembled

2: Mitchell E-5 (1946-1949) 1956 FT7 Yao FT7

and the claims of Ndenda were debated. The headmen supported Liwonde in his claim that the tusks were part of the chief's rights and that when Mlelemba had come he had come 'to get fire from the chief'. Liwonde then upbraided Ndenda for imagining that because he had so many followers he was a chief, and fined him 10s. for being insolent. 643 622 554 578 691

The struggle between Liwonde and Ndenda did not end however. Some years afterwards a man came to Liwonde and said that he wanted to live in his area. This man was a complete stranger and had no relatives there. Liwonde sent him to Ndenda's village. Later while living in the village, this man stole some cloth. He was arrested and Ndenda brought him to the chief saying that the chief was responsible for him. Liwonde told Ndenda that he was being insolent again and that the responsibility must rest with him because the man had married into his village. He ordered Ndenda to pay £1 to compensate the victims of the theft. This Ndenda did but in his view this was tantamount to being chased out of the chief's area. He therefore moved with his children across the boundary northwards into Jalasi's area, and told his unrelated villagers to follow him. They refused to leave Liwonde's area. He was helpless and could do nothing about it. He returned to Liwonde's area a broken man and died shortly afterwards. His eldest son took charge of the village affairs, but so far no successor has been found.

The struggle between Ndenda and Liwonde has some interesting features about it. The strength of the chief in his Government position is not as evident as it has been in other struggles, as, for example, between Jalasi and Kalonga, or between Chiwalo and Ntimbuka, in the cases I cited earlier.[1] It appears only indirectly. Ndenda did not appeal to the District Commissioner against the fine as he might have done if he had felt his position to be more secure. The case history also shows how Liwonde ranged his other important headmen, 47 per cent of whom were kinsmen or co-Invaders, around him against Ndenda who was neither. It shows also that Ndenda's reaction to what he felt to be an injustice, typically enough, was to emigrate and to try to injure the chief by reducing his followers. When this failed he was defeated and it was his downfall, for, like a chief, 'a headman without people is nothing'.[2] 643 622 554 578

[1] Pp. 86 and 96.

[2] *Mfumbe nsyo ngumukola Gumbe ngwove mulembe*: 'A chief who has no people is not a chief'—a saying frequently quoted to emphasize the dependence of the chief on his subjects.

10: Barnes E-5 (1946-1949) 1959
FR5 Ngoni FR5
Mpezeni
Yao FT7

N Y 648 691

The Yao are mistrusted more than any other tribe, and some of the decisions taken by the courts are harsh on Yao. For example, a Yao man who was married to an Ngoni woman had, it was alleged, caught venereal disease from his wife. His wife then applied to the courts for a divorce, which was granted, together with the custody of the children. No bride-wealth had been paid in the marriage, but the husband now offered to pay in order to retain the children. This bride-wealth was refused by the woman's parents. The Yao appealed, but the judgement was upheld, and in addition he was ordered to go back to Nyasaland at once. He asked for permission to return to the woman's village in order to collect his belongings, and this was granted by the court, after first securing agreement between the couple as to the extent of his possessions, to wit, four plates and two beds. This deportation order was made despite the fact that the Yao had been living with his wife for twenty-one years. If a man of some other tribe had been involved, it is unlikely that he would have been ordered to leave the country, nor would the court have been so suspicious of his trying to take away more than his rightful share of the household possessions.

N Y 648 583

A Yao, who had a good job in Fort Jameson, once offered 90*l.* to the Paramount Chief when he was in the town as the legalization payment for a woman of the royal lineage whom he wished to marry. The Paramount Chief refused the money on the ground that the man was a Yao and he was not going to permit Yao to marry into the royal lineage, despite the protest of one of his lieutenants that the Yao was just a man like anyone else.

N 186 609 N Y 648

The reason that is given for this dislike of Yao is that they are sexually very virile, due to the medicines that they possess for increasing potency. It is perhaps significant that the same is said of Indians, who are also disliked. The Yao are known among the Ngoni for their great knowledge of medicines of all kinds, and the allegation of unnatural sexual vigour may be a rationalization of the fear that the Yao may practise sorcery among the families into which they marry. Another factor that may operate is that the Yao are the only tribe in the region that the Ngoni cannot claim to have conquered.

Political Relations with Other Tribes

N 648 721

Before the European conquest relations between the Ngoni and other tribes were principally those of raiders and raided. The great season for raiding was after the harvest, when the surrounding tribes

1: Tew E-4 (no date) 1950 FT7 Yao FT7

office tended to become hereditary. Each councillor had his own village which he 631
administered as a headman. A second set of officials were the court assessors, *mapungu*,
who, unlike the councillors, were not in charge of villages of their own in addition to
their court duties. Their office was not hereditary and they were chosen for their
wisdom and their debating ability. They lived at the court of the chief and their main [692]
duty was to sift the evidence in the judicial cases which came before him.

The village headmen were expected to send elephant tusks to the chief (receiving [651]
small gifts in return), and to invite him to a yearly beer drink. Like the chief, the village
headman governed through a council of the most important men in his village. They 631
constituted a kind of village court over which he presided, and in the old days he 692
could give capital sentence, or award a fine of as many as four slaves. Appeal from his
decision lay to the court of the superior headman, or to the chief. Important cases
would be reported direct to the chief. Most crimes would be settled by compensation.
In cases of murder, several slaves were paid to the kin of the victim, and a fine for
spilling blood to the chief. When compensation was handed over, the recipient always
returned some part of it as sign that friendship was restored.[1]

Macdonald's further account of the treatment of crime shows how weak was the 696
political organization, in spite of the apparent orderliness of the system of inferior and
superior courts. A murderer caught red-handed might be killed at once. If captured
alive he might be ransomed on payment of a fine of from four to twenty slaves, [567]
some of whom might be killed to accompany the dead. If the murderer escaped a
relative of his would be captured and ransomed. This applied to murders occurring
among parties friendly to one another and living in the same village. If the
murderer was from another village, the injured village, if strong enough, would fall
upon the other and kill and enslave the inhabitants. If not strong enough, the chief
might be called in to help to annihilate the guilty village.[2]

Modern Administration

631
In the whole of Nyasaland there must be between thirty and forty Yao chiefs. In 622
the districts of Liwonde, Fort Johnston, and Zomba, where 60 per cent. of the Yao 178
population is concentrated (1931 boundaries), there are at least fifteen such chiefs.
Not all those who have the rank of chief in the old Yao system are recognized as
Native Authorities or even as Sub-Native Authorities by the Nyasaland Administra-
tion, and many Sub-Native Authorities would be full chiefs in the Yao system, and
quite independent of the Native Authorities under whom they are placed.

Nowadays the chief has lost many of his former claims to status. He no longer has
monopoly of the trade to the coast, for goods are brought in by Indian traders and
bought by African tobacco growers or returned labour migrants. He can no longer use
his slaves to increase his wealth by running slaving expeditions. His tribute of food
and ivory has ceased, and he can no longer entertain lavishly, but he is still expected
to give burial cloths and to make gifts to headmen on their succession to office. Some
of his councillors have been made court assessors, and are paid for those duties, but
others are expected to work for him unpaid. Some chiefs do reward councillors who
retain their traditional status but are not officially recognized as assessors by the

[1] Macdonald, 1882, vol. i, pp. 156–8; Stannus, 4, 1922, p. 279.
[2] Macdonald, op. cit., pp. 170–1.

2: Mitchell E-5 (1946-1949) 1956 FT7 Yao FT7

631 advocates the more orthodox type of Islamic devotion in which
643 a quiet restrained manner is emphasized. As far as I know the
745 *twaliki* sect are confined entirely to Jalasi's chiefdom and the *sukutu* to Kawinga and Liwonde. In this matter, Nyambi's people side with Kawinga's and Liwonde's.

On the other hand, local informal organization is well de-
631 veloped so that Chiwalo who is at the point of juxtaposition of
643 Kawinga, Liwonde, Nyambi and Jalasi chiefdoms, may try cases
692 involving headmen from any of these areas, and they usually accept his arbitration. His is the nearest court house. The actual boundaries of the four areas, however, are very clearly recognized and Chiwalo realizes the limits of his jurisdiction. Though he may arbitrate in a difference between headmen, he would not dare to apportion land outside his area. Headmen living on the boundaries of two chiefdoms arbitrate in each other's cases; the villagers under them intermarry. A village in Chiwalo's may
621 procure garden lands in Jalasi's area, and children may be initiated
631 at ceremonies held by headmen in other chiefdoms. There is no
643 clear break in the normal social relationships of people across the boundaries of chiefdoms, and their members interact as freely with each other as members of two villages of the same chiefdom. The cleavage between the villages on different sides of the boundary of a chiefdom becomes apparent only in special situations.

631 The formal relationships of the chiefs, set by the history of their conquests and their kinship, and incorporated in and slightly
643 modified by the Administrative framework, are overlaid by an informal local organization where the interaction of village headmen only conforms to the formal pattern when no agreement can be reached.

The Position of the Modern Chief

643 In ritual situations a chiefdom is clearly differentiated from its neighbours, and many of these situations arise in the cult of
769 tendence on the ancestor spirits. The ancestor cult has fallen
782 away almost completely among village headmen, but among the chiefs it is still strong, and appears particularly in the rain-prayers and the initiation ceremonies. Later, I shall discuss at length the importance of the chief's sanction before headmen may conduct initiation ceremonies. This is because the spirits

2: Mitchell E-5 (1946-1949) 1956 FT7 Yao FT7

again. In the past, disputes hinging on murder had this aspect, though they were usually settled by a feud. Nowadays, of course, all murder cases are lifted altogether out of the hands of the chief, but the special fine for bloodshed is still levied in cases of assault. When a man is convicted of assault in the chief's court he will have to pay three separate amounts: one to the victim as compensation, one as a fine to the Native Treasury, and one to the chief 'so that he may see again'.

A similar provision applies to cases of arson. When a case is brought to the chief because a man has burnt another's hut, the chief will say that the guilty man has 'brought a torch into his country'. The man convicted of arson will have to pay a special fine to the chief in the same way as the man who caused bloodshed. The association of the unity of the chiefdom with fire probably has some place in the attitude of the chief here. People who have come to a chiefdom as strangers are said to have come to 'seek the chief's fire',[1] and all the fires in the chiefdom are supposed to have been kindled from one flame. This expresses the unity of the chiefdom: the burning of the hut, therefore, symbolizes the introduction of discordant elements, as well as being a serious crime in itself.

The Chief's Judicial Functions

It is clear from MacDonald's writings that in pre-White days the chief settled most of the serious disputes in his chiefdom. Nowadays, this function of the chief has been given legal sanction under the Native Courts' Ordinance of 1933. 'A' grade courts have the power of imposing fines not exceeding £5, or 6 months' imprisonment and 12 strokes whipping; and 'B' grade courts may impose fines not exceeding £1 and imprisonment including hard labour not exceeding one month, but not corporal punishment. The Native Authorities, Jalasi, Nyambi, Kawinga and Liwonde, all have 'A' courts; the Subordinate Native Authorities, Chikweo, Ngokwe, Chiwalo, Chamba, Mposa, Mlomba, Stora, have 'B' courts. Only a certain proportion of disputes is brought for trial in these Native Authority courts. This is because, firstly, the Administration does not admit the legality of some disputes. Most of these centre on charges of witchcraft,

[1] A similar view of fire in the village context is discussed in Chap. V, p. 112.

2: Mitchell E-5 (1946-1949) 1956 FT7 Yao FT7

692 but some also on having killed children by *ndaka*[1] (a disease
[673] caused by the mystical influence of sexual intercourse). Secondly, other cases not brought to the court are petty squabbles which do not involve heavy compensation. Examples of these disputes are personal quarrels, disputes over land ownership, petty theft and so on. The Native Authority's court handles mainly cases arising from adultery, which involve compensation varying from £1 10s. to £5; and theft and assault for which similar compensation may be payable. If the case is brought up to the
696 chief's court there is a mechanism whereby the compensation may be enforced. Ordinarily, in those cases which are not tried in the court house, there is no legal sanction behind the payment of the compensation, so that if a man defaults in payment no legal pressure can be brought to bear on him. It is for this reason that such cases are tried in the court house.

695 The cases are heard by the court assessors who call the wit-
693 nesses and cross-examine them. Sometimes a chief or his representative is in the court, as at Kawinga's court, but sometimes as in Chiwalo's court, the chief never comes to the court house at all. After the evidence is sifted, one court assessor takes the case to the chief and tells him about it. On the basis of the court assessor's analysis he awards compensation and imposes fines. The court assessor then takes this information back to the court house, reassembles the protagonists, and announces the chief's decision. The losing party has then the opportunity to appeal, first to the court of the Native Authority, if the case was tried in a Subordinate Native Authority's court, and then to the District Commissioner.

Cases tried by the chief in his extra-Administrative capacity are usually tried outside the court house. The same personalities take part in the trial but they act now with reference to a different set of values. The procedure is exactly the same, except that in Chiwalo's area the chief is present at the hearing. He sits somewhat aside from the main body of people but within hearing distance, weaving a mat or making nets while the case is being tried.

692 In minor cases, if either of the parties is dissatisfied with the
643 decision, he may take the case up to the chief for arbitration and, theoretically, may then take it from him if he is a Subordinate

[1] See Chap. V, p. 112.

2: Mitchell E-5 (1946-1949) 1956 FT7 Yao FT7

Native Authority, to the Native Authority, and eventually to the District Commissioner if the case is one which he will countenance. In practice, most cases reach the chief and go no further. Most people accept his decision. Thus the chief has important judicial functions. 692 643

The Chief as his People's Representative

In special situations where the welfare of the chiefdom as a whole has been endangered by an infringement of the mores, the chief may take action. For example, a chief prosecutes a village headman who allows a woman in his village to bear her first child before she has been through the *litiwo* ceremony. Every woman who becomes pregnant for the first time must undergo this ceremony, during which she is instructed in child welfare and child care. If she bears a child without undergoing the ceremony, she is said to have 'spoilt the country' (*ajalwice cilambo*), in the sense that she has besmirched its reputation.[1] 643 687 843

Chiefs usually call in magicians 'to smell out' those responsible for keeping back the rain.[2] When the rains fail as they did in 1948–9, their failure is held to be due to the magic of some evilly disposed person. It then becomes the chief's duty to call in a magician to indicate who this person is. The fees for this duty are paid by the chief himself on behalf of his people. 643 787 821

The chief also acts as a representative of his people when they are affected as a whole. For example, Nyambi called in a magician after man-eating lions had taken some of his subjects. This magician called for the hearth-stones and domestic utensils from all the villages in the area, and built them up into a pyramid over which he made some anti-lion medicine. This was to clear the whole chiefdom of man-eating lions. 643 789 731

Nowadays, the chief's representation of his people is seen most clearly in his position in the Administrative framework.[3] The chief represents the Administration to his people since they approach it through him. At the same time the Administration clearly treats him as the representative of his people and consults 643

[1] I was told in Mponda's area that the women undergo this ceremony *after* the birth of the child, but that it is still obligatory.

[2] *Kutawa ula*—lit. 'to tie or bind the rain', in the sense of to make it a prisoner.

[3] I have dealt with this aspect more fully in 'The Political Organization of the Yao of Southern Nyasaland'.

2: Mitchell E-5 (1946-1949) 1956 FT7 Yao FT7

554 These headmen who are the centres of local social structure
622 are the higher headmen that MacDonald mentions.[1] Many of
them to-day are the descendants of the traditional councillors
692 (*nduna*) who were sent out to the extremities of the chiefdoms to be the outer governors in these areas.[2] Their villages are social centres in that many disputes are taken to these important headmen before they are taken to the Native Authority's court. For example, the dispute between the women of Nampeya and Cikuwita was taken to Ntibwilibwi.[3] The chief usually orders headmen to assemble at the villages of important headmen when he has directions to issue to them. Very frequently the Administrative officers camp there for the night on their tours and call
554 the headmen in to them for conference. The placing of mosques
at the villages of these important headmen also indicates their
622 significance as social centres. Most Moslem villages have small
346 mosques which the more devout use for the morning and evening prayers during Ramadan only. At the villages of important headmen larger mosques have been built and these are used for the midday prayers on Fridays (*jumo*), when most of the Moslems in each area assemble in their best clothes for communal prayers. Large brick mosques have been built at the court villages of Jalasi, Liwonde and Kawinga. There are other large mosques at the villages of chieftains such as Chiwalo, Chamba, Mposa, and of important headmen such as Kangomba, Nyenje and many others. These chiefs and headmen were all Invaders and are, as I shall show later, almost by definition Moslems. They are also headmen of high rank so that the placing of the mosque, and the other features of local social structure, are largely derivatives of the system of ranking.

554 Rank therefore underlies the structure of local areas as well as
the structure of the chiefdoms as wholes. It is, as I show later,
622 closely associated with the historical origin of the headmen. Yet the correlation is not perfect and I shall show that other factors tend to militate against the fixed historical ranking of headmen. Nevertheless, the principle of primacy is the most important single factor.

[1] See Chap. II, p. 36.
[2] See Chap. IV, pp. 92–3.
[3] See Chap. V, p. 130.

2: Mitchell E-5 (1946-1949) 1956 FT7 Yao FT7

621 his mother was ill and had gone with Lupunje's younger brother to
626 the diviner to find out the cause of the illness. The diviner indicated
that Lupunje thought that Kalambo was not showing him the proper
753 respect. Lupunje knew that his sisters had lost their value in the lineage since they had stopped bearing children, whereas Kalambo's sisters were still reproducing. His malice had caused the woman's illness. When Kalambo got home he asked his mother's brother to blow water out of his mouth [1] and help him to prepare some medicine for the sick woman. This Lupunje did and the woman recovered immediately.

Shortly afterwards Kalambo remonstrated with his mother's brother for causing the illness of his sister, but Lupunje said that he had no control over it: the spirits had brought it on her. Kalambo knew that he could do nothing and abandoned the idea of building his own village. He knew that there was bound to be more illness if he carried on with his plan.

182 Clearly the belief in the mystical powers of the ancestors or of
sorcery is a force which prevents sections from breaking away
621 from the village. A break follows only when opposition within
626 the village has reached sufficient pitch to force one of the sections to take the risk of illness, rather than to continue living in the village. Sometimes the dissident group comes back because further deaths at their new village site convince them that their action was wrong.[2]

Effects of the Headman's Personality

622 Whether a village maintains its unity or not, depends very
largely on the personality of the headman. This is why the officiating headmen and others at the installation ceremonies are so insistent that cases should be settled quickly. The main duty of a headman is to maintain harmonious relationships within his village and to see to the welfare of its members. All severe
[787] illnesses are immediately reported to him, and so are the results of all divinations. He usually sends his representative to divina-
[764] tions concerning kinsmen not related to him matrilineally. He is immediately notified of all deaths and he organizes the funeral rites. Squabbles are brought to him for arbitration and even
622 where squabbles are settled by kinsmen in the village, usually the
●692 headman is formally told of them. Frequently marriage diffi-

[1] An act which recants malice. See Chap. VI, p. 139.
[2] See the case history in Chap. VI, p. 153.

2: Mitchell E-5 (1946-1949) 1956 FT7 Yao FT7

culties are settled by the marriage sureties [1] who only report to him after the affair is settled. In disputes of unusual gravity, the headman may call in unrelated persons [2] to arbitrate, but he himself must be present. 622 692

His own behaviour is expected to be exemplary. Any deviation from the norm is likely to be strictly censured, not only by his own villagers, but also by other village headmen, who may say, 'Important men do not behave in this way.' A man who had an argument with his sister's son was told this. He had taken the dispute to a neighbouring headman who decided against the village headman and rebuked him for behaving in a way not consonant with his position. Village headmen should be above squabbling with their villagers. A village headman who was also a leech had virtually raped a woman whom he was treating. He tried to maintain this was part of the treatment. Her matrilineal relatives reported the matter to the headman of her village and he brought the errant headman in front of the chief who said, 'You are wrong to do this when you are an important man. You are a big man and you act as a commoner does. You ought to be able to show the commoners how to behave.' He was made to pay a compensation of £2 10s. and fined 10s. Had he been a commoner he would have been made to pay a compensation of only 30s. 622 577 558 684

The ultimate sanction to which all headmen are subject, is that their people will leave them if they behave badly. This was the fate of Cikumba. 622 558 837

In 1944 Cikumba had a village of about 30 huts. The son of the first Cikumba, Meya, had two wives who were living virilocally in Cikumba's village. Meya had enlisted in the army. While he was away, Cikumba, the village headman who was Meya's father's sister's son (though he called him 'father' because of positional succession), started taking Meya's two wives to beer drinks. Meya's sister one day asked Cikumba about his behaviour, but he only said that Meya could not do anything as he was far away. Things had gone too far, however, when one morning he was seen coming out of the 166

[1] The representative of a spouse in all affairs arising from conjugal relationships. They are usually senior matrilineal relatives. See Chap. VI, pp. 176–7. Their rôle is discussed fully in *Marriage among the Machinga Yao of Southern Nyasaland.*

[2] *Mundu jusampambali*, i.e. a person from outside.

3: Stannus D-5 (ca. 1912) 1922 FT7 Yao FT7

643 ivory by his own hunting parties or as a kind of tithe on other hunting expeditions. The ground tusk, i.e. the tusk on the side on which the elephant falls when killed, was the chief's share. In the same way, the hind leg on the ground side of any game animal killed was sent to the chief. He took a share of the spoils of war and most of his people yearly gave him either service in building houses, etc., or kind in the form of food-stuffs, but he enforced no service and levied no tax, except for the making of a new burial place.[1] New settlers in his village were expected to invite him to drink beer made with their first crops.

In return, he always provided cloth to invest the body of the dead. He also made presents at the time of *Unyago*.[2]

A chief's life, therefore, may not be "all beer and skittles," though he consumes a good deal of the former and a kind of skittles[3] was a favorite pastime of one of the Malemyas. A saying embodying this idea was used when pleading for a man who had [538] committed adultery with his chief's wife "one who carries a tortoise (on a string over his back) is likely to get his clothes soiled"; a man has to put up with the troubles his belongings bring him. So a chief must bear with his own people who do wrong.

643 Ample opportunity for exercising such forbearance was provided, since the chief was formerly the adjudicator of all disputes and dispenser of justice in all crimes. The headman 642 did the same in a smaller way but appeal could always be made to the chief. Cases were heard by the chief sitting in council. He and his headmen and elders would assemble in the village open space and here cases were stated, often at great length.

Each party to the case would employ some man well known for his powers of oratory as leading counsel. The speaker for the plaintiff would start proceedings by a recital of all the evidence he could collect. After him would follow innumerable speakers, whether actual witnesses or not, each telling as good a story as he could, and the defendant's case would then be put by his representatives. There was no cross-examination but at the end, a summary was made and judgment given. A chief often took the advice of some one of his old men whom he trusted.[4] The chief received no payment for his services, except in the case of murder; neither did the "counsel" receive anything for their efforts.

674 **Crimes.** Causing the death of a person by witch medicine, *usuwi*, was the most heinous [754] crime; a *muwi* ordeal might be held, but if the offense was proved, burning was the punishment which usually followed.

[684] The offense second in gravity was adultery. This might be expiated by payment or by death, according to the circumstances under which it occurred; mutilation was often [696] performed in the case of a chief's wife. All death sentences with the exception of those

[1] Vide supra, p. 244. [2] Vide supra, pp. 245, 264. [3] Vide infra, p. 360.

[4] The old Malemya (Nahutumbo) has some very fine men among his counselors. Kumtupa and Chiupile, the latter renowned for his oratory, were his chief advisers in legal matters. Ndeleka, a slave, was his mentor in all personal and family affairs, while Chekasongo was in charge of all ceremonies and served with his assistant, Mpanje, as high priest on all occasions of intercession. Others acted as his emissaries, such as Mkopiti who always went on any missions to the Angoni, among whom he was known as Ndonjira.

754
695

One of the group is chosen to go in the morning and summon some one to appear on behalf of the accused man. He and the headman join the party in the bush when the whole of the case from the beginning of the deceased's illness, is again related, ending with the fowl test and dramatic statement of the name of the accused, whereupon the fowl's head on its stick is planted in the ground opposite to the man who has appeared for him as he squats listening to the story. The man who has been called to defend the accused, though the latter may have no particular claim on his kindness, is in honor bound to do his best. As the fowl's head is planted opposite him, he will shift quickly to one side, protesting the innocence of the accused. All then adjourn to the village to put the case before the chief. One of the men acts as prosecutor, again going through the whole case, calling witnesses and others to aid him in speaking. The accused is then defended by the man chosen for the purpose, assisted by others whom he asks to help him. They may speak for a week or more. The chief decides the case, and the result will be communicated to the defendant by his pleader.

If he is found guilty of causing the death of the deceased, he must pay the fine inflicted or if he has been accused actually of *usuni*, he may have to undergo, or may offer to undergo, the *usuni* ordeal poison himself or the test may be made with a dog tied to the leg of the accused man. If the ordeal is satisfactory to the defendant, the man claims compensation for wrongful accusation. If he dies with *usuni*, his relatives have to pay compensation for the crime he is thereby shown to have committed.

[692] If either party is dissatisfied with the chief's decision, recourse may be had to a hearing before another chief, the first being very glad to be rid of the case. The second gives judgment quickly. If the case goes on to a poison-ordeal, a day is fixed and the accused is taken out to some spot two or three miles from the village where a hut is built called *ndawo* (place of torture). Accompanied by the two pleaders, he remains here for several days. People from the village come out and attempts are made to make him confess any accomplices; beans are fried over a fire and when very hot are put into the accused's hands and his fists closed over them, or they are put in a cloth which is fastened round the perineum, or bamboo sticks are arranged one on either side of the head and tightened by a string.

The third day, natural undyed bark-cloth is obtained and men go out to fetch the *usuni* poison, two men from each party, the prosecutors and the defendants. One man sent by the prosecutor has actually to take the bark from the tree, while the others look on to see fair play. The bark can only be taken from the east or west side of a tree; it may not be cut with a knife or axe or be pulled off, but must be cut with a stone and allowed to fall; only a piece which falls with the inner surface lying upwards is taken. Any of the party may carry it but they must on no account leave one another. Having returned, they hide the *usuni*.

On the appointed day, the big drum is sounded and a crier goes round saying that everyone who wants to see so and so drink *usuni* must go to the appointed place. Every large

5: Mitchell E-5 (1946-1948) 1949 FT7 Yao FT7

Village headmen themselves are graded in importance and there are certain marks of rank which distinguish the more important headmen. We have already examined one of the most obvious ways in which the village headman's importance is judged, that is, by the number of people in his village. In addition there are other ways in which village headmen may be distinguished both from the common people and from less important headmen. Thus, for example, some of the more important village headmen have the right to conduct initiation ceremonies, this right being granted to them by the man who is in a way the most important village headman of all—the Chief. The right to hold a boys' initiation ceremony (*lupanda*) is of more importance than the right to hold a girls' initiation ceremony (*ciputu*). Yet another mark of rank is the right to wear a plain crimson band around the forehead (*mlangali*), this right also being granted by the Chief. 622 554 881

The Administration has recognized the more important village headmen and has entrusted to them certain duties. By no means all the people called 'village headmen' in this paper are recognized as such by the Administration, but I do not know of any person who has the right to wear a red band and is not also an Administrative village headman. 622 554

The status system has apparently been taken over from pre-European days, but it is uncertain to what extent these important village headmen had powers. Some to-day have all the marks of rank that the Chief has, i.e., they hold both boys' and girls' initiation ceremonies, are entitled to the special greeting accorded to important village headmen (*subako*), wear a red band, have the right to be buried in the village and not in the common cemeteries, and to have their bodies prepared for interment by people of similar rank. It appears that such people exercised a certain amount of power, by reason of their personal qualities, over less powerful neighbours, and some were able in the past to demonstrate their autonomy by moving off to establish petty chiefdoms of their own.

Nowadays the Administrative village headmen have certain statutory duties to perform towards other minor groups actually independent but considered, for the purposes of the Administration, to belong to the village. The relative importance of the headman is still the deciding factor in such questions as determining who is to be called in to arbitrate in a case. Thus, though for Administrative purposes a small village may be considered to be a part of a larger Administrative village under an Administrative village headman, yet when a case for arbitration occurs within that smaller village, some other person than the Administrative village headman may be called in as arbitrator. 622 554 631 692

Laws promulgated by the Administration are conveyed through the Chief to the Administrative village headman and in this way a hierarchy of power is being introduced. The small village headman now sees the Administrative village headman as a representative of the Chief and the Administration. The Administrative village headman in turn sees the Chief in this light. But in matters directly affecting the Administration, the small village headman also sees the Administrative village headman as his own representative *vis-à-vis* the Chief and the Administration. 622 631

In general the village is by far the most important corporate body in the social organization of the Yao, not only as a significant primary group but also as an element 621 622

622 are composed of the descendants of slave-wives of village headmen in days past. Like the village 643 headmen the chief was considered to be in danger from contact with death. He could not attend 622 the funeral of commoners, he could not eat the 761 chicken which was brought to him at the announcement of the death of a commoner (for a village [753] headmen) or subject (of a chief). Should he do so he would suffer from a disease called *ndaka*. Also village headmen, like the chief were supposed to be well versed in medicine and were regarded with some awe on this account. The chief and the village headmen were distinguished from the commoners in these ways.

643 But, the chief himself was a village headman. He had to administer the affairs of his family 622 group and slaves as had other village headmen. 692 He was involved in the struggle for power going on around him because he was not lifted above these secular struggles as was, for example, the Zulu King.[1] Duff MacDonald records for example: "In a dispute between the inhabitants of different villages, the respective headmen represent their own subjects, and the chief is appealed to. All his decisions are final. Still the chief may otherwise have less influence than a powerful headman, and we have known cases where he simply contented himself with grumbling when his headman acted contrary to his desire; and in many criminal trials he is eclipsed by the sorcerers and pounders of poison."[2] 643 Again MacDonald records how the chief tried 622 to entice subjects away from a village headman at a trial by pointing out that the village headman had a poor character and was unsuitable to look after people.[3] While there seems to have been some evidence that a number of village headmen under a chief acted jointly in the face of a common danger, but apparently with no powerful military organization. Village headmen seem to have been almost entirely autonomous in their actions, slave-raiding on their own, even raiding villages who paid tribute to the same chief as they did.

643 There is little doubt that village headmen did
622 wax in power and finally break away to form the
578 nucleus of a chiefdom of their own. The chief that a headman had left could do little to regain his lost subject and he had to rule not by tyranny but by tact. Duff MacDonald, for instance, records : "When a quarrel arises between the chief of the country and an important headman the latter may rebel and found a new kingdom, thus depriving the old chief perhaps of one-third of the villages in his dominion". [1] Nkanda is an example. "Nkanda of Cherasulo was at first a headmen of Kumpama's but rebelled and lives on the Southern side of that mountain an easy day's march from Blantyre." [2]

643 The leader was known, and is still known to-day, by the term *aryene cilambo*. This might be translated as "owner of the country" but the term "owner" in this context would be a mis-translation. I prefer to translate this phrase as : "The person with whom a certain area is identified". [3] Hence when a man says, as the Yao do : "I come from Kawinga's", he does not mean that the land is owned by Kawinga, but that Kawinga is the most important man in that area.

645 Among the village headmen in the area under a
631 particular leader there were a number of trusted
692 village headmen called *nduna*, which term I
622 have translated as "councillors". These councillors had special duties to perform. They were in the nature of governors in outer areas and each had a number of other villages under his jurisdiction. By this I mean that these villages were supposed to take certain cases for trial to him and to approach the leader through him. The councillors were supposed to visit the village of the chief each morning and to report anything untoward. The councillors also had the important duty of advising the chief, particularly in connexion with raiding of neighbouring tribes. Councillors also arbitrated in the domestic affairs of the chief and in the all too frequent conflicts between the Chief, his sister's sons and his younger brothers.

643 The chiefs are also able more successfully to press their claims to certain gifts from visiting Europeans, particularly in articles which are difficult for Africans to obtain—for example, cartridges. One chief uses his rifle to shoot game and the meat is peddled round the villages by one of his servants. Some are also able to make use of the services of remand prisoners and other villagers in their gardens, thus growing more food and sometimes more of cash crops as tobacco. Other chiefs are able to use their salaries as capital and employ labourers to cultivate tobacco and other cash crops. A few returned labour migrants make small gift payments to the chief.

643 692 The main duty of the chief is the arbitration in disputes. The Native Courts Ordinance established two classes of native courts, called respectively A and B courts, which differ in their powers. Under the same Ordinance court assessors who are remunerated from Native Treasury funds, were appointed.

693 647 The Native Authority's bureaucracy is made up of a large assortment of functionaries and officials, including in the largest court, (Kawinga's), 6 court assessors, 1 court clerk, 1 assistant court clerk, 1 community worker, 1 forest guard, 1 agricultural demonstrator, 1 sanitary inspector, 9 court messengers, 2 caretakers, 4 garetta men, [1] 1 market clerk, 1 market sweeper. Other Native Authorities also have well inspectors. These people are remunerated from the Native Treasury and the most highly paid is usually the court clerk. I do not intend to deal in detail with the duties of each but I shall deal with the more important of them and make some general remarks about their position in the structure.

693 645 The court assessors are supposed to assist in arbitrating cases. Under the old system there were both councillors, **ndusa**, and court assessors, **mapanga**, (see p. 144). There is not sufficient provision for the remuneration of both councillors and court assessors in the modern system and there has been a general alteration in their functions. Some of the old councillors are no longer

622 Administrative village. The N.A.'s bureaucracy considers him responsible for the collection of the taxes though, of course, the legal responsibility rests on the tax-payer. The village headman is generally responsible for the various regulations that the villagers must carry out. In practice the Administrative village headman may be in charge of a single kin-group and thus have a certain amount of control over the villagers because of his kinship with them. More frequently, however, the Administrative village headman is also in charge of a number of other hamlets, sometimes completely unrelated to him but who happen to have been assigned to his jurisdiction. He then delegates the responsibilities to the headmen in charge of the hamlets.

622 554 The Yao judge rank among the village headmen largely in terms of historical antecedents and by the number of dependants that a village headman has. While a certain village headman may be ranked fairly highly in the status system because his ancestors were closely associated with the ancestors of the chief, he may not now have many villagers around him. A newcomer to the area however, can only become notable by acquiring sufficient followers to make him a man of considerable power. Associated with rank are the various insignia that I have mentioned, i.e. the right to hold initiation ceremonies, the right to wear a red band round the head, etc. The competition among village headmen therefore, is phrased largely in terms of competition for these particular insignia of rank. They strive to be recognized as Administrative village headmen—"to have a book" as they say, since this at once means that they will receive a remuneration for work which they would have to do anyway, and it also means that they would be recognized as village headmen in the eyes of the White Administration. Village headmen also compete with each other to have the right to hold initiation ceremonies and use the threat to move out of the chief's area to bring pressure to bear on him to force him to grant the right.

692 While domestic quarrels are usually settled by the kin-group leaders and by the husband's and wife's parties conferring together, differences out-

692 side the kin-group are usually settled by the arbitration of a local village headman or the chief. What decides whether a case is tried by a village headman or a chief seems to depend largely on the seriousness of the case and hence the amount of compensation that it involves. A quarrel between a village headman and his heir for example was settled by a local village headman, the compensation in this case being a matter of 2/- and a pot of beer. More serious cases are taken to the chief for arbitration and whether the cases are then tried in the court or not depends on the type of case. Certain cases are known to conflict with the system of values of the Whites. They are tried by the same court assessors and arbitrated in by the same chief who preside in the context of the Native Courts Ordinance, but they are handled by an entirely different procedure. Thus, a case involving the accusation of sorcery or the breach of a taboo leading to death and compensation claims is arbitrated on by the chief acting in terms of the indigenous value system. These cases take place outside the court-house, usually at the chief's hut, and are not recorded as a court case at all. The chief awards compensation in the same way but it is not recorded as in ordinary court cases.

Cases which are known not to conflict with White values are tried in the court-house if compensation of some value is involved. If we exclude from consideration the cases following a breach of the N.A.'s regulations we find that the recorded court cases are almost entirely about compensation for adultery, petty theft and assaults. Here the chief and court assessor function as social personalities acting in reference to a set

[TEXT CONTINUES TOP OF P.158B]

VI. GENERAL
Summary

642 177 I have tried to describe the political structure of the Yao in Liwonde, Kawinga and Nyambi sub-areas in terms of the interaction of social personalities in a structure briefly summarised in the diagram. The aspect of the social personality perceivable in set situations of social interaction

[TEXT CONTINUES BOTTOM OF P.158B]

692 of White values which coincide with their own.

692 Informants say that the position of the village headman in contrast with that of the chief is 643 getting progressively weaker. They maintain that cases once tried by the village headman are 622 now taken to the chief's court. Whether this is true or not is difficult to ascertain. The fact that there is some sanction on the guilty party to settle the compensation if he is tried in the chief's court, probably pays a part. The compensation awarded is recorded in the Court Case book and the chief is empowered to keep a man under remand until it is paid. The chief sometimes supports the village headman against recalcitrant subjects. A man once refused to pay a compensation awarded against him by a village headman. The village headman referred the case to the chief who said to the man: "As you have disobeyed the order of the village headman it means that you have insulted me, the District Commissioner and the Governor". But in general there is a tendency for the central authority to be strengthened and the chief emphasizes his relationships to the White Administration in order to consolidate his position of dominance over his headmen. At a succession ceremony of a village headman the chief who had supported an unpopular candidate said: "This man has been chosen by me and the Governor agrees with me". Clearly in this insecure situation the chief saw himself against his subjects, and as part of the White Administration. He uses his power in this political situation to establish a dominance over the headmen, that he could never have established before the White men came (see p. 144).

VI. General SUMMARY

642 depends on the field of values in which the inter-177 action is taking place. To illustrate this with a simple example, when the court messenger exacted a levy of 1d. from each garden-owner in the area where the sacrificial cloth had been stolen from the tree-shrine, they saw in him a

1: Tew E-4 (no date) 1950 FT7 Yao FT7

Administration, but many cannot afford to do this. The people regard the taxes they pay to the Administration as a substitute for the chief's tribute. As the Native Authority the chief appears to be responsible for tax-collection, as the tax-clerk lives at the court.

The chief is responsible to the Administration, among other things, for latrine construction and for punishing the infringement of various regulations. His main duties are judicial, as judge of the Native Authority Court. The bureaucracy attached to the Native Authority includes a number of functionaries, e.g. Kawinga's, in 1947 one of the larger courts, had 1 court clerk, 1 assistant court clerk, 1 community worker, 1 forest guard, 1 agricultural demonstrator, 1 sanitary inspector, 9 court messengers, 2 caretakers, 4 gaoltta men, 1 market clerk, 1 market sweeper, 6 court assessors. These are paid by the Native Treasury. Court assessors help in the arbitration of cases. The key position at court is held by the court clerk, and usually he is not a Yao, but an Nguru, who, because he is literate, is the medium of all written communications to and from the chief. The court sergeant is the correct channel of approach to the chief, and the court messengers represent the chief to the villages.

The territory of a Native Authority is divided into 'administrative villages', under officially recognized and paid headmen. Within these areas there are clusters of huts, which do not form officially recognized administrative units, but which are none the less villages under their own hereditary headmen. The administrative village headman is responsible for the payment of taxes in his area, and for the observance of various regulations. He is usually a man with some standing in the Yao social system: one who has the right to conduct a boys' initiation ceremony, or to wear the head-band signifying rank. His authority is derived partly from his status as a senior kinsman, partly from his status as a village headman. If the administrative village under him includes a number of hamlets unrelated to the administrative village headman, he will delegate his responsibilities in these hamlets to their own headmen. Consequently, since village headmen perform administrative duties, whether they are officially recognized or not, there is competition among them for the official posts. In order to bring pressure to bear on the chief to make him concede marks of rank, they may threaten to move out of his area, and so to deplete his following. In spite of this bargaining tool, the position of the village headman *vis-à-vis* the chief is said to be getting progressively weaker. Cases once tried by them are now being taken to the chief's court, and the latter is able to draw on the power of the Administration to establish his dominance over the headmen.

The chief in the modern system stands as the representative of the people to the white Administration, and as the representative of the white Administration to the people. One reason for the lack of direct contact between the Administration and the people is the fact that Yao is not the official language of the district, and therefore Yao interpreters are necessary.

There are some occasions when the chief and his officials perform the functions proper to their office under the old social system. The white Administration is not concerned with their ritual functions, nor with initiation rites, nor does it take cognisance of witchcraft offences. Accusations of witchcraft are judged by the same personnel as accusations of theft or adultery, but they are not dealt with in the court house, nor recorded in the book.

2: Mitchell E-5 (1946-1949) 1956 FT7 Yao FT7

692 but some also on having killed children by *ndaka*[1] (a disease caused by the mystical influence of sexual intercourse). Secondly, [673] other cases not brought to the court are petty squabbles which do not involve heavy compensation. Examples of these disputes are personal quarrels, disputes over land ownership, petty theft and so on. The Native Authority's court handles mainly cases arising from adultery, which involve compensation varying from £1 10s. to £5; and theft and assault for which similar compensation may be payable. If the case is brought up to the 696 chief's court there is a mechanism whereby the compensation may be enforced. Ordinarily, in those cases which are not tried in the court house, there is no legal sanction behind the payment of the compensation, so that if a man defaults in payment no legal pressure can be brought to bear on him. It is for this reason that such cases are tried in the court house.

695 The cases are heard by the court assessors who call the wit- 693 nesses and cross-examine them. Sometimes a chief or his representative is in the court, as at Kawinga's court, but sometimes as in Chiwalo's court, the chief never comes to the court house at all. After the evidence is sifted, one court assessor takes the case to the chief and tells him about it. On the basis of the court assessor's analysis he awards compensation and imposes fines. The court assessor then takes this information back to the court house, reassembles the protagonists, and announces the chief's decision. The losing party has then the opportunity to appeal, first to the court of the Native Authority, if the case was tried in a Subordinate Native Authority's court, and then to the District Commissioner.

Cases tried by the chief in his extra-Administrative capacity are usually tried outside the court house. The same personalities take part in the trial but they act now with reference to a different set of values. The procedure is exactly the same, except that in Chiwalo's area the chief is present at the hearing. He sits somewhat aside from the main body of people but within hearing distance, weaving a mat or making nets while the case is being tried.

692 In minor cases, if either of the parties is dissatisfied with the 693 decision, he may take the case up to the chief for arbitration and, theoretically, may then take it from him if he is a Subordinate

[1] See Chap. V, p. 112.

008 chief, his sister's sons and his younger brothers.

693 Besides the councillors, there were a number of officials known as *mapungu* (sing. *lipungu*), which term I translate as court assessor. These officials have often been confused with the councillors, though they were a completely different set of officials. They were not necessarily village headmen though councillors were always so. Also the position of the court assessors, unlike that of the councillors, was not hereditary. Court assessors were chosen because of their wisdom and debating ability and often slaves were appointed. Councillors were chosen because of their general status in the community and once chosen tended to be succeeded by the heir, who for all intents and purposes, socially replaced his predecessor. The court assessors lived at the court of the chief and they were the correct channel of approach to him. No one could approach the chief without at first approaching a court assessor and reporting his business. The assessor's more important duty, however, was the sifting of evidence in cases in which the chief was arbitrating. The court assessor then recounted this evidence to the chief who delivered his opinion and awarded compensation.

643 554 In general the picture that we have of the political organization of the Yao before the Whites came, is that of a number of leaders of kinship groups, who by acquiring sufficient dependants and slaves were able to maintain a certain level of power. Certain groups of them were under the power of more influential leaders (the chiefs) who usually had sufficient resources to send trading caravans down to the coast, which in turn maintained his power over his neighbours. In this loose political organization the importance of being able to control dependants was cardinal and the adage "a chief without people is nothing" (*mulimbo nago ngwanakola ilumba, ngwanawe mulimbo!*) sums up the situation pithily.

643 The chiefs are also able more successfully to press their claims to certain gifts from visiting Europeans, particularly in articles which are difficult for Africans to obtain—for example, cartridges. One chief uses his rifle to shoot game and the meat is peddled round the villages by one of his servants. Some are also able to make use of the services of remand prisoners and other villagers in their gardens, thus growing more food and sometimes more of cash crops as tobacco. Other chiefs are able to use their salaries as capital and employ labourers to cultivate tobacco and other cash crops. A few returned labour migrants make small gift payments to the chief.

643 692 The main duty of the chief is the arbitration in disputes. The Native Courts Ordinance established two classes of native courts, called respectively A and B courts, which differ in their powers. Under the same Ordinance court assessors who are remunerated from Native Treasury funds, were appointed.

693 647 The Native Authority's bureaucracy is made up of a large assortment of functionaries and officials, including in the largest court, (Kawinga's), 6 court assessors, 1 court clerk, 1 assistant court clerk, 1 community worker, 1 forest guard, 1 agricultural demonstrator, 1 sanitary inspector, 9 court messengers, 2 caretakers, 4 garetta men,[1] 1 market clerk, 1 market sweeper. Other Native Authorities also have well inspectors. These people are remunerated from the Native Treasury and the most highly paid is usually the court clerk. I do not intend to deal in detail with the duties of each but I shall deal with the more important of them and make some general remarks about their position in the structure.

693 645 The court assessors are supposed to assist in arbitrating cases. Under the old system there were both councillors, *ndunu*, and court assessors, *mapungu*, (see p. 144). There is not sufficient provision for the remuneration of both councillors and court assessors in the modern system and there has been a general alteration in their functions. Some of the old councillors are no longer

693 paid by the chief but still advise him, and retain
645 much of the prestige due to their rank, which is inherited. Others have been incorporated as court assessors though they may not actually take part in the duties. Some now combine both sets of duties and function both as councillors and court assessors. Some of the duties of both sets of officials, however, have been taken over by the court clerk and other court functionaries. Although the position of court assessor was part of the old tribal structure, modern court assessors see themselves as occupying a position in a structure largely of White fashioning. I once heard a court assessor when conducting an enquiry into a case of adultery, cut short the prolixity of a witness saying: "None of these long stories. We are conducting this case according to the custom of the Whites."

More illuminating still is the position that the court clerks occupy in the modern structure.
[212] They are differentiated from the vast majority of the population because they are literate. All of them have been educated, usually in a mission
[563] school. A high proportion of them are Nguru because more Nguru are Christian (hence educated) than Yao (see p. 151). Because he can read and write, the chief court clerk is the medium through which the chief expresses himself in writing and the medium through which he gets written information from the Administrators and others. The court clerk is therefore in a unique position of knowing all the business that comes into the chief's hand by letter. He, of course, must also write the replies so that he has a very good knowledge of what is going on in the territory. In addition, because of his education and knowledge of the ways of the White people the court clerk often makes a better councillor than the uneducated and naive traditional councillor does. Therefore in certain matters the court clerk, rather than the councillor, is the chief's most important adviser.

693 The various other officials have different
647 functions to perform, frequently of a semi-technical nature. There are sanitary inspectors, well inspectors, etc. The court sergeant who is present at the cases now performs many of the

693
647 duties which the court assessor used to in past days. The correct channel of approach to the chief now is through the court sergeant.

In most situations where the chief's orders are to be carried out, the various members of his bureaucracy execute them. For example, when the chief wants some duty to be performed by the villagers, it is the court sergeant or messenger who sees to it. The messengers carry out the instructions and wishes of the chief to all parts of his territory. To the villagers, therefore, the N.A.'s bureaucracy represent the chief when acting as his agent but they also represent the White Administration because much of their interaction with the villagers is in terms of some regulations based upon White values. The court clerk who apprehends a villager and charges him with being in possession of an unlicensed dog is acting, in the eyes of the villager, not so much as an agent of the chief, but rather as an agent of the chief representing the Administration. The sanitary inspector may explain to the man who has been charged with having no latrine, "It is the law that you should have one", and by this he means the White law.

3. *The Position of the Subordinate Native Authorities*

643 I have not yet considered the position of the
648 S.N.A.'s in the structure. In the diagram they are represented as a separate interactional system. The reason why they have been represented thus, is because the S.N.A.'s regard themselves as autonomous units and in no way an integral part of the main interactional system under a chief. Each S.N.A. has his own sub-court and a small bureaucracy of his own. He sets up a replica of the situation under the chief. Each S.N.A. has the insignia of rank that the chief has: he is given the same greeting; wears the red band around his head; holds initiation ceremonies, etc. Each S.N.A. has the duty of making a sacrifice to the ancestors before and after the rains. A recent theft of a sacrificial cloth hung on a tree-shrine in a S.N.A.'s area was held to endanger the rainfall in that area alone. The chief in the area makes use of his position in the structure in relation to the Administration to bring pressure

[See p. 152 — Analyst]

6: Mitchell E-5 (1946-1947) 1949 FT7 Yao FT7

ndembo, a woman who is pregnant for the first time;[1] *kacembere*, a woman who has one or two children; *mjembere*, a woman who has three or four children, and lastly, *ndolwa*, a woman who is past child-bearing age. 554 584

The information which I have been able to collect on abortifacients and contraceptives suggests that they are not used by married people merely to prevent their having more children, but that they are used by people who wish to avoid pregnancies which would be embarrassing, for example, by a woman whose husband is a labour migrant. To what extent the abortifacients and contraceptives are efficacious I cannot say; some, I know for certain, rely on a magical principle, for example, the medicated cord worn by a man during intercourse. On the other hand, the abortifacients taken orally may have some active ingredient. 842

A barren woman or an impotent man is regarded with some embarrassment and the marriage sureties (*acinamangosuw*) of a childless couple will go to considerable trouble and expense consulting diviners and leeches in an attempt to make their wards productive. Childless couples are regarded as not fully adult and are treated in a patronizing way by those who have borne children. Since a man may marry other wives, barrenness in a woman is a cause of sorrow to her husband, but is not in itself a ground for divorce. Where the man is impotent, however, the woman may divorce him on this ground, though she usually takes a paramour and forces her husband to an action for damages which automatically leads to a divorce because it is the usual practice in these cases for the court to ask the woman if she wants to be divorced from her husband. [885] [554] [586] [837] [694]

In contrast to the satisfaction shown at the birth of a child is the sense of awe evinced when a child is still-born or the woman miscarries. The Yao do not distinguish between still-births and abortions, both events being known by the word *kwasanga*. This is a verb and refers to the process of abortion; there is no term for the dead foetus itself. I made no attempt to enumerate miscarriages and still-births because they are supposed to be due to breaches of sexual taboos on the part of the husband and wife, and interviewees were naturally reluctant to mention them. Miscarriages and still-births are greatly feared, and the woman is considered to be in a very dangerous condition until she and her husband have carried out a ritual purification. Should a man have intercourse with a woman who has miscarried and not yet been purified he will contract a disease called *lwaso* which is believed to be invariably fatal. Still-born children or aborted foetuses are buried in a hole dug with sharpened sticks in the bush by the women, whereas children who are born alive and die afterwards are buried in the graveyard in graves dug by men with hoes. The burial spots of still-born babies or aborted foetuses are marked with a stone or broken pottery, since it is believed that to step on them will induce an illness. 845 [783] [753] [766]

The concern of the interested kin-groups is shown in the child-birth procedure. Birth normally takes place in a hut in the presence of the older female relatives of the woman and the female representatives of the man. The husband's representatives are necessary because the Yao, like many other Central African peoples, believe that an adulterine child will not be born to the woman unless she confesses (*kupaca*) the name of the genitor. If she persists in concealing the identity of the genitor, they 844

[1] *ndembo* = elephant, hence ivory. The terms *lilibo* and *ndembo* here both refer to the ivory beads traditionally worn by the woman in the pregnancy initiation ceremony. [192] [361]

1: Tew . E-4 (no date) 1950 FT7 Yao FT7

775 782 Kangomba, used to persuade Nyanja to help in the sacrificial rite. When Kapeni in turn fled to Mount Soche from the Ngoni, and died there, the Yao addressed their offerings to him, not to Kangomba.[1] The word *Mulungu* has sometimes been interpreted to mean Supreme Being, God, Creator, but among the Yao it seems not to have [776] a personal connotation. It was used to describe the agent in any mysterious event,[2] or the place where the ancestor spirits (*masoka*) were supposed to dwell. Daily life was [769] full of acts of respect towards the ancestors, who were regarded as jealous of the living, and requiring constant propitiation.[3]

Sorcery

754 Accusations of witchcraft and measures for dealing with it play a dominant role in Yao social life. With certain exceptions nearly all diseases and deaths are thought to be caused by sorcery. The exceptional causes are: the hand of God, old age, the transgression of certain taboos, and battle wounds. If sorcery is suspected the relatives of the sick or dead man consult the diviner to identify the offender.

Yao (in common with the Maravi and many peoples of Central Africa) believe that sorcerers have a craving for human flesh, which they satisfy by killing with magic the victims of their malice and hatred. They acquire their magical powers by an apprentice- [835] ship, which might include incestuous relations with mother, sister, or mother-in-law, or sleeping on the grave of the mother for one night. The sorcerer then learns the medicines and finally demonstrates his power by killing a young relative by magic; [266] he waits till the victim is buried, and then magically exhumes him for the secret feast with his fellow sorcerers. Each sorcerer who shares the flesh owes a debt to the one who secured the victim.

[75] Charms are used as preventive measures against sorcery. When a diviner has 754 diagnosed the cause of death as sorcery, retaliatory measures are taken. The headmen 683 of the village could either call in the witchfinder to identify the offender or he could call in the diviner to take action against all the sorcerers in the village. After the [695] diviner, *Mabisalila*, had revealed the guilty ones, they were challenged to take the poison ordeal to prove their innocence. If they died, the proof and the punishment were simultaneously accomplished. If they survived, the diviner was held to have been at fault and they were acquitted. The witch doctor was supposed to entice sorcerers to the graveside, and slay them with magic more powerful than their own.

[695] The diviner's findings are to-day checked by the poison ordeal administered to a chicken. A sorcerer detected in this way might be asked to provide medicine for the man whose sickness he had caused, or after a death he might be compelled to pay compensation. If the accused is a village headman, he will not be summoned before a chief, but his brother will take the villagers away from the sphere of his influence, or he may be chased away from the district. Accusations of sorcery follow certain regular lines. Nearly all accusations fall on relatives. Diviners are consulted by matrilineal relatives of the sick or dead person, and the man most usually accused is the brother of the accuser, or the husband of his sister. Witchcraft is therefore a manner of expressing the hostilities latent in these relations, which are, in the Yao social system, full of tension.

[1] Macdonald, 1882, vol. i, p. 70.
[2] Hetherwick, 3, 1902.
[3] Heckel, 1935, pp. 14–15; Macdonald, 1882, vol. i, pp. 58–75, 204–13.

2: Mitchell E-5 (1946-1949) 1956 FT7 Yao FT7

695
342
516

PLATE IV

A dispute in settlement at Chiwalo's hut. The assessor is sitting under the veranda behind the pole. A village headman can just be discerned in the shade under the veranda. The commoners sit in the sun.

(*October 1948*)

[facing p.56]

692 but some also on having killed children by *ndaka*[1] (a disease caused by the mystical influence of sexual intercourse). Secondly, [673] other cases not brought to the court are petty squabbles which do not involve heavy compensation. Examples of these disputes are personal quarrels, disputes over land ownership, petty theft and so on. The Native Authority's court handles mainly cases arising from adultery, which involve compensation varying from £1 10s. to £5; and theft and assault for which similar compensation may be payable. If the case is brought up to the chief's court there is a mechanism whereby the compensation 696 may be enforced. Ordinarily, in those cases which are not tried in the court house, there is no legal sanction behind the payment of the compensation, so that if a man defaults in payment no legal pressure can be brought to bear on him. It is for this reason that such cases are tried in the court house.

695 The cases are heard by the court assessors who call the witnesses and cross-examine them. Sometimes a chief or his repre- 693 sentative is in the court, as at Kawinga's court, but sometimes as in Chiwalo's court, the chief never comes to the court house at all. After the evidence is sifted, one court assessor takes the case to the chief and tells him about it. On the basis of the court assessor's analysis he awards compensation and imposes fines. The court assessor then takes this information back to the court house, reassembles the protagonists, and announces the chief's decision. The losing party has then the opportunity to appeal, first to the court of the Native Authority, if the case was tried in a Subordinate Native Authority's court, and then to the District Commissioner.

Cases tried by the chief in his extra-Administrative capacity are usually tried outside the court house. The same personalities take part in the trial but they act now with reference to a different set of values. The procedure is exactly the same, except that in Chiwalo's area the chief is present at the hearing. He sits somewhat aside from the main body of people but within hearing distance, weaving a mat or making nets while the case is being tried.

692 In minor cases, if either of the parties is dissatisfied with the 643 decision, he may take the case up to the chief for arbitration and, theoretically, may then take it from him if he is a Subordinate

[1] See Chap. V, p. 112.

2: Mitchell E-5 (1946-1949) 1956 FT7 Yao FT7

 622

compounds, especially in areas where there are man-eating lions,[1] 554
so that it is no longer an infallible indicator of the hut-owner's 351
rank.

Minor village headmen always allow their superiors to sit on 622
a chair. If village headmen of commensurate status are present, 554
chairs may be sought for them all. But a minor village headman 576
never occupies a chair, even if one is available, in the presence of his superior. At a meeting, for example, a chief occupies a chair and so may his most important *nduna* or councillor. The more important headmen sit alone on separate mats, for a man only shares a mat with his equals, and then only rarely. Junior headmen, however many there are, have to try to squeeze themselves on to one mat or squat on the ground.

Important headmen also have the right of walking in front of their juniors. If there are three or four headmen returning from, say, a court case, they arrange themselves in the pathway in an order which reflects their rank. As they file down the narrow field paths the leader is the most senior among the group. After him come the other headmen and last of all the commoners. This order of precedence is also followed when initiands pass through the tribal initiation ceremonies. The sisters' sons and other matrilineal descendants of important headmen precede those of the less important headmen. At Chiwalo's hut also, I [695] have noticed that the more important headmen sit under the verandah while listening to private cases. The less important headmen sit with the commoners under a shelter or out in the sun.

I have been discussing the visible marks of prestige. But high 622
rank also tends to carry with it some other privileges which are 554
not immediately observable. The most obvious is Government 648
recognition. I have already mentioned that under the 1912 Ordinance, village headmen were recognized by the Administration. These Administrative village headmen, who had certain duties to perform, were paid a small annuity and were in earlier days given a 'book' in which the tax payments could be recorded. To-day, the Yao still describe Government recognition as 'having a book'. Administrative village headmen derived more benefit from Government recognition than merely an

[1] The huts in Plate IX (*a*) and (*b*) are in Namwera area where there are man-eating lions. Most huts have compounds. A large proportion of huts in areas where there are no lions also have compounds.

2: Mitchell E-5 (1946-1949) 1956 FT7 Yao FT7

that Asubiya in her jealousy had gone to grumble to Bt. Ntalika about this. Rajabu (F20) who had heard about this called Cikoja and they assembled Bt. Amisa, Bt. Bwana Isa and Asubiya in Bt. Amisa's hut, and spoke to them about the dangers of backbiting. Cikoja remonstrated with the women saying, 'I don't want to hear about this again. When you love people do not love people who are strangers. Do not talk behind people's backs and bring war in the knots of your body-cloths.' 613 578 754

A few weeks after this, in June 1948, Aluwinda (F47), a 3½-year-old daughter of Asubiya, died. When her mother saw that the child was seriously ill she took her to her patrilateral relatives in Liwonde area. She had barely got there when the child died. The headman of the village sent a message back to Cikoja to tell him of the death. He in turn sent a message to Amidu and Rajabu and they went to the village to attend the funeral. After the first mourning feast three days after the funeral, Kaifa, the child's mother's elder sister's son, and Malawago, representing the village in which the child had died, went to a diviner who indicated that the cause lay in the backbiting of Asubiya about Bt. Amisa, but that the sorcerer was Bt. Ntalika. The tension now had reached almost breaking point and after about six months Bt. Ntalika moved out into Liwonde area without announcing that she was going.

At the end of December, Asubiya's son Selemu (F46), aged 4½, suddenly became ill one night. In the morning Amidu and Rajabu and Nkatawila (D20), who was the husband's marriage surety, went to a diviner. He indicated that the cause was a girls' initiation basket which Ayesi kept. This basket, the diviner said, kept losing its strength and it was only on the death of a close relative that it would regain power. They returned and when they got near the village they could hear the women keening. They agreed that the diviner was a liar and returned and got their money back. The body was buried on January 3rd, 1949. Asubiya now left the village without announcing her intention and went to complain to chief Kawinga. Cikoja in the meantime, noticing that Asubiya was not present at the funeral, sent out men to search for her. After two days Kawinga's chief court assessor, Masunda, brought Asubiya back to the village. He told Cikoja that he had cross-examined her and found that she said her elder sister was causing death because of her jealousy over the food. Masunda returned and some days later Kawinga wrote a letter to Cikoja telling him to come to the court village. This he did and was told to hold the mourning feast, but to take the people to the court village to hold the funeral meeting. There a divining party would be arranged and the cause of the death determined. 613 578 754 695

After the first funeral feast the people of Cikoja assembled at

2: Mitchell E-5 (1946-1949) 1956 FT7 Yao FT7

613 Kawinga's court village. Masunda reviewed the events leading up
578 to the calling of the meeting and asked Cikoja to give his statement.
754 Cikoja replied, 'You say I am finishing the people. I do not deny
it. If the people are being finished by my sister, then I am finishing
695 them.[1] You may speak what is in your hearts.' Asubiya now made
her statement. After this, Bt. Amisa was called out. She denied
knowing anything about the case. Masunda at this point was about
to send the case back to Cikoja when Matosa, a second arbitrator,
asked who the marriage sureties were. Amidu came forth as the
woman's surety. Matosa asked him to tell the court about Asubiya's
marriage relationships. Amidu then reviewed the history of Asubiya's
pregnancies. He pointed out that the first child had died.[2] The
second one also died. The diviner had indicated that she had broken
a sexual taboo and the child had died from *ndaka* as a result. The
third child was still alive. The fourth had died recently. The fifth
was the one about whom there was a case that day. He recounted
how they had gone to a diviner and how he had indicated that the
cause of the death lay in the backbiting which the person herself
had done. Masunda cross-questioned Amidu about the *ndaka* medicine
that was given and assured himself the complainant was satisfied that
the second child had died of *ndaka* and not sorcery. Masunda then
called Salimu since the woman was living at the old village site under
Salimu's charge. Salimu, who works as a tailor in an Indian store
some miles away, said that he did not have a great knowledge of the
case. Cikoja said he had nothing to say. Eventually, after some
hours of cross-questioning, Masunda decided that a divining party
must be made up and the results of the divination reported to the
court. Bt. Amisa now stood up and said she was prepared to undergo
the poison ordeal to prove that she was not a sorceress. She said that
she would go with them to the diviner to find out the cause of the
death of the child. Masunda said that they would leave the matter
at that. At the village they would have to decide on a divining party
and they would have to give poison to a chicken to make sure that
the divination was correct. After that Cikoja would have to report
the matter to Kawinga and the case would be re-opened. Nyenje
was at the inquest and said to Cikoja that if they were not relatives
he would have other words to say to him about this business. As it
was he did not see what he had to rejoice about. Cikoja said that he
did not know, but that Nyenje should ask the owner of the village.
Surprised, Nyenje said, 'Who is that?' Cikoja indicated Salimu.

[1] Cikoja is talking as a representative of his lineage here.

[2] The first death in a family is never divined for, because the Yao say that if this is done, it 'would chase the father away'.

2: Mitchell E-5 (1946-1949) 1956 FT7 Yao FT7

Salimu said that Cikoja ought not to speak like that because it only made things difficult.

Two days after this Cikoja called a meeting at Salimu's hut in order to choose a divining party. Eventually they chose Kanyenga, Asimama, Raisi and Musa. Musa was the witness for Kanyenga who represented the woman's party. Raisi represented the father's party, and Asimama went to be his witness. Cikoja gave them 5*s.* and they went to look for a diviner. Eventually they found one and Kanyenga opened the consultation. The diviner indicated that the cause of the death of the child was *litukula*.[1] The party paid him and looked for a place to sleep. The following day they sought another diviner. Kanyenga again consulted and was told that Bt. Ntalika and her son were sorcerers but that the mother herself was ill with *litukula*. Kanyenga rejected the *litukula* explanation and insisted on the sorcery of Bt. Ntalika and Cilimba. The diviner consulted again and said that the main cause of the death was the *litukula* and that the sorcery of Bt. Ntalika was added to the other. Asimama here insisted that the sorceress in reality was Bt. Amisa. The diviner rejected this. He said the best way to test the divination was to give poison to a chicken. The party was at a loss to know what to do. In two divinations, a *likango* was indicated twice, while sorcery was said to cloud the issue. They decided to give a chicken poison. They returned to Rajabu's hut in the village where he had married. Here they sent Rajabu to tell Salimu that they were about to test a chicken at the poison ordeal, but that he must not tell Cikoja. They gave two chickens poison, one for *litikula* of the mother and one for the sorcery of Bt. Amisa. The *litukula* chicken died, indicating that Bt. Amisa was innocent. When Cikoja was told this he refused to believe it and sent them to poison another two chickens. The result was the same. He now decided that he would take the divination to a distant place and chose to go to Ngokwe chiefdom. Kanyenga led the divination party again. They consulted the diviner and after much testing and retesting the diviner decided that the sorcerers were Bt. Ntalika and Cilimba and that the *litukula* had nothing to do with it. He also specifically excluded Bt. Amisa. The diviner now told the father's two representatives to stay behind while the woman's representatives fetched Cikoja. When he came, the diviner revealed the result to him personally. Cikoja was at a loss what to do in this situation. Two divinations including poison tests had indicated that *likango* was the cause, a third and very exhaustive one had revealed Bt. Ntalika and her son. Neither had indicated Bt. Amisa.

[1] *Litukula* is a type of pimple (the generic term for which is *likango*) which, when it comes to a head and bursts, causes the death of the last-born child.

613 578 754 695

613 Eventually, in March, he decided to take the case up to Kawinga's
578 court. Cikoja was not willing to accuse Bt. Ntalika and Cilimba
754 publicly. Accordingly he went to Kawinga but he did not send for
695 Bt. Ntalika. When Masunda, the court assessor, heard this he refused to handle the case and told Cikoja that Bt. Ntalika had to be brought to court so that they could hear her statement. Cikoja and his people came back to the village and nothing more was done about it. In April, Rajabu wrote a letter to Cikoja telling him that he wanted to report him to Kawinga and to bring a charge for compensation against him because he had falsely accused his mother of sorcery.

I left the field in June and do not know what the result was.

The series of events are extremely complex. I have given only a summary of them. Nevertheless, the main themes in the history are clear enough. We see Cikoja as the representative of the lineage of any order whatsoever. We find in particular the opposition of the two collateral brothers, Kanyenga and Cilimba. They are the representatives of the two lineage segments in this situation. There is seldom any doubt about the affiliation of these two personalities. Consistently in the accounts of the divinations each rejects the diviner's finding if it accuses a member of his lineage segment. Note that the divination seance itself becomes a field in which the opposition of the segments is expressed. Kanyenga continued consulting diviners until finally he got the answer he wanted. His opponents rejected these findings and eventually even discounted the chicken ordeal. The diviners' findings and the results of the poison ordeals, therefore, are bandied about between the opposed groups, and though the whole procedure of divination and accusations of sorcery is directed towards the extirpation of discordant elements in the community, in fact, it is only a facet of the underlying cause of the tension—the opposition of segments in an ever-segmenting lineage.

613 In addition to the structural opposition of Kanyenga and
578 Cilimba there is a certain amount of tension among Cikoja's uterine sisters. Bt. Amisa, Asimama, Ayesi and Asubiya have all had children. Bt. Amisa is the senior and the relationships between her and any of the other sisters are difficult. In addition to this there is the tension between the generations seen in the attempts of the sons of Amisa to bring a compensation claim

3:Stannus D-5 (ca. 1912) 1922 FT7 Yao FT7

751 757 825

Again, charm medicine may be contained in various articles which are also generally worn round the neck. The teeth and claws of the beasts of prey are so employed, generally arranged in pairs bound together so as to form a crescent and suspended from a string. The teeth of crocodiles, lions, leopards, and the claws of the same beasts and of some large birds of prey are thus employed. The teeth etc., are in themselves charms against injury, probably against what one might call homologous injury. The idea of stuffing them with medicine is probably a secondary consideration, a process of fortification of the charm so that its use comes to have a more powerful influence. It is interesting to see of late years that the native, recognizing the decorative value of these crescent-shaped amulets, has begun to copy them in lead and ivory. A series of these of graduated size is worn as a necklace by women.

756

When a medicine-man is consulted, part payment is made in advance, "payment to go and dig medicine (roots)." The rest of the payment is made when the cure is effected. Should a patient not be satisfied with his treatment and wish to consult some other medicine-man, he pays to the first a quarter of the fee he would have paid if his cure had been effected; this is called "paying him to get his medicine away." Unless this is done, should he recover later, he will be liable to claims for full fees from all of the medicine-men he has consulted; each will say his own medicine has gone on acting and has effected the cure. A medicine-man may take a case he is treating into his own house.

In prescribing medicine, very particular instructions are given with an embargo on certain things which may or may not have some use and significance. A medicine-man in 1891 at Malenya's, who inoculated every one in the forehead with bullet proof medicine, said that no one must step across a *wusi* (pestle for pounding grain), and no one must eat the leaves of the sweet potato.

A medicine-man always partakes of part of the decoction he is giving to a patient to show that it is harmless; I think these preparations are mostly inactive. I should hate to sample all the castor oil I have prescribed, though many natives have had suspicions about me when I have not done so.

137 298

Poisons. Though there are a large number of species in this country, both vegetable and animal, from which poison might be extracted, those that have gained any reputation among natives and have come under my observation are but few in number. *Mwai* (*Mwabi* Chin.) "the ordeal poison," is the bark of *Erythrophleum guineensis*. The natives distinguish two varieties of *mwai*, the two trees differing slightly in leaf, flower and bark; *mwai* is the *Erythrophleum guineensis*, the second variety known as *mperanjilu* is doubtless an allied species. *Mwai* is the poison employed in the poison ordeal.[1] It is administered in a poisonous dose as a decoction of the bark, recovery or otherwise depending on whether or not the poison is voided by vomiting. Natives give as the symptoms headache, giddiness, disturbances of vision, vomiting and purging, with slowing of heart beat. *Mper-*

[695]

[1] Vide infra, p. [illegible].

3:Stanzus D-5 (ca. 1912) 1922 FT7 Yao FT7

754 A *wusui* may be met with under different circumstances. An educated native told me of his experience one night when riding a bicycle back to a township where he was employed. Coming along a smooth-hoed path with his lamp alight, he become aware of the presence of something in the bush in front and at the side of him. Suddenly his lamp was smashed and he was left in darkness, while something pushed him over so hard that he fell off his cycle. Picking himself up, he started to wheel his cycle on, when there appeared on the path in front, figures who, rubbing their hands together to produce a phosphorescent glow, held them up in front of the boy's face. He was, however, not molested further, and coming to a group of huts he knew, he went in and made inquiries as to the cause of his experience and was promptly told that there was a man living in a hut near the spot on the path where they had occurred who was supposed to be *wusui*. Such a story is given for what it is worth. The boy was about twenty-two years old, a highly educated native with an intelligent appreciation of the worth of superstition.

Some *wusui* demonstrations can have no object but to strike terror and keep up the prestige of the *wusui* class. Mr. Moggridge wrote me, "A boy of mine was certainly attacked and squeezed about the neck by a man whom he described as naked, huge, and slightly luminous, on the road at the back of my house in Blantyre. The boy was strolling up and down in the dusk and had nothing about him to provoke robbery; he was almost choked before he managed to let out a yell which determined his assailant to let him go. He was not a local boy and no theory of personal spite was supportable. I thought and still think that the motive was to show that even the Resident's servant twenty yards from the Resident's house was not safe from *wusui*." It seems possible that some natives with intent to rob had pretended to be *wusui* but recognizing that their victim was likely to cause trouble, they went no further.

[824] It is said that the phosphorescence is produced by rubbing in the hands two vegetable substances from local trees and that this is the method the *wusui* adopt to announce their presence.

754 **Poison Ordeal.** As I have said above, when anyone sickens or dies, the illness or death is likely to be considered the work of some one who is *wusui*, and action will be taken by the ● 695 relatives to find him out. The proceedings in such a case where witchcraft is suspected will now be briefly sketched; though I give an account of a case from beginning to end as if it occurred at the present time, it must be understood that the giving of *wusui*, the ordeal poison, is now much less common than formerly. A man becomes ill in some village and does not get better, so the caster-of-lots is consulted. The sick man's relatives or friends go to the [787] lot-caster and approach the subject indirectly by asking him his advice about a number of imaginary cases; they may say, "Things have been stolen from our house." The lots are cast and the caster replies, "No, you have not come to see me about that." This may go on for hours before the facts of the case proper are mentioned to him. Finally, they tell him that one of their relatives is ill in the village, the lots are consulted and advice is given

3:Stannus D-5 (ca. 1912) 1922 FT? Yao FT?

as to procuring medicine for him from a medicine-man. If the caster of lots is suspicious that 754
some one has caused the illness, he will at the same time add, "Let us and so pray," mentioning the name of the man whom he suspects. Following the advice given, the medicine- 695
man is consulted. He promises to get medicine for the sick man and goes into the forest to search for it. Having returned, he prepares his decoctions and having first partaken of a little himself, he gives it to his patient with further instructions. The friends of the sick man having returned to the village, indirectly ask the man on whom suspicion has been cast to pray for the sick man saying, "He is covered by some spirit." The man prays, [782]
sometimes using *ndapani* and beginning *chonde! chonde!* "please! please!" and goes on to ask *Mlungu* to take away the spirit which has covered the sick man, adding that he himself is innocent of any ill doing against the man and that any grudge he may have had against him is now forgotten.

If the sick man recovers, well and good, but should he die, there is more to be done. 754
The morning following the burial, the relatives go to the *chief* and in answer to his inquiry 695
of what they are going to do, they say they must again consult the caster-of-lots. They 791
will choose some one who lives a long way off and is not cognizant of the death of their relative: those who go to him have not been shaved after the funeral. Much the same business is gone through as on the first occasion but, in the end, the caster-of-lots is told that they suspect some one unknown to have brought about the death of their relative. The names of all the possible persons are given, the lots cast in each case and, eventually, one is picked out as the guilty man; the caster-of-lots saying, "If I am not telling the truth, you can test my words by giving *mwai* (ordeal poison) to a fowl; if it does not die, come back and break up all my properties."

He may have gained information from his lots that the suspect is a man of power gained by some special rite, e.g. the midnight bath on the ant hill, in which case he will insist that the fowl poison-ordeal must take place on an ant hill or he will give other specific instructions. On the way back, the relatives will buy two fowls; *mwai* will be prepared by a boy who has not passed through his initiation ceremonies, and two of the party will be chosen as pleaders, one for the deceased, the other for the accused. One fowl is then selected to represent the accused and the poison administered according to the conditions laid down by the lot-thrower, while the two pleaders give injunctions to it, one saying, "You are guilty; you shall die"; the other, "You are innocent and you shall show your innocence by vomiting the poison and recovering." If the fowl dies, a third man cuts off its head, saying, "I am the butler of the dead." *Mwai* is then administered to the second fowl to ascertain whether any other persons are involved. The head of the first fowl is singed, stuck on a stick and carried back with the party towards their village. A little way outside, they halt in the bush, and send word to the headman that they are returning. He then comes out privately to see them, asking what has happened, and is told all the events in sequence.

759
595

One of the group is chosen to go in the morning and summon some one to appear on behalf of the accused man. He and the headmen join the party in the bush when the whole of the case from the beginning of the deceased's illness, is again related, ending with the fowl test and dramatic statement of the name of the accused, whereupon the fowl's head on its stick is planted in the ground opposite to the man who has appeared for him as he squats listening to the story. The man who has been called to defend the accused, though the latter may have no particular claim on his kinsmen, is in honor bound to do his best. As the fowl's head is planted opposite him, he will shift quickly to one side, protecting the innocence of the accused. All then adjourn to the village to put the case before the chief. One of the men acts as prosecutor, again going through the whole case, calling witnesses and others to aid him in speaking. The accused is then defended by the man chosen for the purpose, assisted by others whom he asks to help him. They may speak for a week or more. The chief decides the case, and the result will be communicated to the defendant by his pleader.

If he is found guilty of causing the death of the deceased, he must pay the fine inflicted or if he has been accused actually of witchcraft, he may have to undergo, or may offer to undergo, the mwavi ordeal poison himself or the test may be made with a dog tied to the leg of the accused man. If the ordeal is satisfactory to the defendant, the man claims compensation for wrongful accusation. If he dies with mwavi, his relatives have to pay compensation for the crime he is thereby shown to have committed.

[292] If either party is dissatisfied with the chief's decision, recourse may be had to a hearing before another chief, the first being very glad to be rid of the case. The second gives judgment quickly. If the case goes on to a poison-ordeal, a day is fixed and the accused is taken out to some spot two or three miles from the village where a hut is built called ndowe (place of torture). Accompanied by the two pleaders, he remains here for several days. People from the village come out and attempts are made to make him confess any accomplices; beans are fried over coals and when very hot are put into the accused's hands and his fists closed over them, or they are put in a cloth which is fastened round the protracts, or bamboo sticks are arranged one on either side of the head and tightened by a string.

The third day, natural undyed bark-cloth is obtained and men go out to fetch the mwavi poison, two men from each party, the prosecutor and the defendants. One man sent by the prosecutor has actually to take the bark from the tree, while the others look on to see fair play. The bark can only be taken from the east or west side of a tree; it may not be cut with a knife or axe or be pulled off, but must be cut with a stone and allowed to fall; only a piece which falls with the inner surface lying upwards is taken. Any of the party may carry it but they must on no account leave one another. Having returned, they hide the mwavi.

On the appointed day, the big drum is sounded and a crier goes round saying that everyone who wants to see or and no drink mwavi must go to the appointed place. Every large

3:Stanzaa D-5 (ca. 1912) 1922 FT7 Yao FT7

village had its regular place of torture and *mwai* drinking, two or three miles from the village. Those used by Malemya, the old Zomba chief, may still be seen. 754

A clear way is made two feet broad and fourteen feet long in the bush and here the accused takes up his position attended on either side by the two pleaders, the defending pleader on the right, the prosecuting on the left. Facing east or west or following the directions originally given by the *master-of-kita*, that is, taking up the position in which the accused is supposed to take a midnight bath, or practice some rite under a tree or an ant hill, etc., he is given a decoction of *mwai* to drink from a gourd. This decoction is made on the spot, the bark being pounded up on a stone by one of the prosecutors. The accused must have had no food that day. He then starts to walk up and down the short cleared path with the two men, one on either side of him, the one saying, "Now you have drunk *mwai*, you shall die as you deserve; you did in fo-and-fo," the other denying the accusations, saying, "He shall vomit the poison." He is watched by the assembled crowd who note the various symptoms of which vomiting is the first and said to be the most characteristic. After this has gone on for some time, they watch for what is called the *mpungo* which is said to be "a ball of bile formed in the mouth and expelled by vomiting so that it bounds on reaching the ground but not before", followed often by a second ball, twenty minutes later. Should this be expelled, recovery may be expected, foreshadowed by clearing of the vision. If he recovers, he is indeed a wonderful man and is hailed on all sides. The women trill with their tongues and shout, and he is carried back in triumph; the defending pleader will swagger about and demand anything he wants for his client. 695

A fatal termination is characterized by little and non-forcible vomiting. Purging is common but said to be painless. Vision is affected and as time goes on, the spectators ask what he can see, "Do you see that over there?" indicating a hill. If he makes mistakes, then they say, "Ah, he is going to die!"

The poison may not take full effect for three or four hours. The end is ushered in by a last stage when the legs become weak; he staggers, then unable to stand any longer, falls to the ground dead, succeeded by the onlookers who rush in and hurl stones upon the body, crushing it. The relatives take the mangled corpse and lay it on logs covered with grass in the bush. No other covering is permitted. It may be placed in a tree by people acting as uncle. Burial is forbidden. [766]

In some cases *mwai* used to be burned, not being given the chance of the poison trial. This took place at a recognized spot like *ndaso*. The last man to be burned by Malemya was Mtubula in 1902. Burning was also a punishment in some bad cases of murder. Such was the fate of Chingale. The man was put in a *sharo-stick*, a pile of logs was built round him and then set on fire. [683]

Witch-finder. In addition to ordeal poison, another method of discovering a *wizard* is by "smelling out." If a number of people have died in a certain village, the inhabitants may begin to think that there is a *wizard* among them, and procure the services of a *mbindo*. 754 695 791

3: Stanton D-5 (ca. 1912) 1922 FT7 Yao FT7

754
695
741

M'ninkile is a Chinyanja word from *ku-bisa*, "to hide," referring to his custom of hiding in the village; the practice is originally Mang'anja, since adopted by the Yao. *M'ninkile* is often a woman and may be young.[1] She comes to stay in the village unknown to the people, lives in a watch house in the gardens and is said to go about at night when she is able to summon *masoi* persons from their houses. The fee for her services is paid beforehand. Later, the villagers are assembled and going round the company holding out flour in her hand, she calls upon *Ee-and-Ee* as the guilty man saying, "This is his 'night-name.'" The villagers all answer, "There is no one of that name in the village." She then goes round again and throwing the flour over the accused, utters his ordinary name and runs off into the bush, not to appear again. The accused may then offer to take *masoi* (ordeal poison) to prove his innocence or if it is a case of illness only and not death, he may be treated by a medicine man, the process being called *ku-lapisile*, "to take evil things out of."

A *masoi* man is sometimes said to renounce his old practices and may then be received into the company of *mbinkile*. A famous *mbinkile* near Zomba affirms that he used to be *masoi*. The mode of action of *mbinkile* varies greatly with different men; for some the ceremony is quite a minor matter; in other cases, it is an important affair.

Witch-destroyer. Where death is suspected to have resulted from *masoi*, steps may be taken immediately to catch and kill the *masoi*. For this purpose, the help of the *mundu jasankhale* is sought. *Ku-ankhala* means "to break off the end of a stick"; it appears to be both a Chinyanja and a Chiyao word. The word refers to the practice of the professional witch-killer who is supposed to run a stick through the anus up the bowel of his victim and then break it off, leaving part inside. The *jasankhale* having been informed of the approaching funeral hides in the bush near the graveyard and watches the interment. After everyone has gone, he is free to put in operation that for which he has been called. The following *modus operandi* is related of a celebrated *mundu jasankhale* called Angwi of Zomba. The water in which the corpse had been first washed was obtained and put in an earthenware dish. He also provided himself with a gourd containing medicines and some stones, and another gourd filled with poison made from crocodile gall to anoint the *mbinkile* sticks. He also had a small antelope's horn containing medicine which when smeared on the head rendered him invisible, together with the stalks of a species of millet called *mbabwe* which shoots its grains at a touch, and a whistle made from the horn of a small antelope, the *ulibi*.

So provided, he proceeded to the grave, around which he drew a ring with medicine contained in still another horn. Within this circle, all was safe. This was followed by a square immediately around the grave with a stone from the gourd placed at each side, north, south, east and west. The plate of water was placed on top of the grave. The *mundu jasankhale* then anointed himself with the medicine which made him invisible to the *masoi*

[1] Cf. Sapir, op. cit., p. 200.

3:Stanton D-5 (ca. 1912) 1922 FT7 Tao FT7

and sitting within the circle, he blew his whistle which was audible to the sunsi man who was then induced to come out of his house. When he had reached the grave, the water was sprinkled over him by the *jumakutala* with the millet stalk from the dish on the grave, or he was struck with the gun's tail; in either case, he fell to the ground senseless. He was then ready to be dealt with. The whistle sticks, small bamboos filled with crocodile poison, were pushed up the anus and broken off to liberate the poison. Sticks might also be inserted behind the ear or in various other spots. The sunsi was then beaten to wake him up; he ran off to his own village and there, a little later, he sickened and died, telling no one the cause. After death, the *ancle* when preparing the corpse of the hitherto unsuspected sunsi, might find the end of the stick projecting from the anus or see the puncture elsewhere with the medicine adhering to them, and the man was revealed in his true colors.

754
695
791

At Mwichie's village, there was a man called Lisuga who professed to be able to extract the poison injected by the *jumakutala* by causing his patients to undergo a vapor bath and to drink certain decoctions. This man would never reveal the name of anyone who came to him for treatment but would brag that "trade was brisk." The symptoms of the mortal malady caused by the whistle are said to be intestinal obstruction with tremendous distention of the abdomen (peritonitis).

[161]

Of this same village, a story is told which, if not true, at all events illustrates the sort of thing that is believed. As has been mentioned above, whenever the *jumakutala* blows his little horn, any sunsi will hear it and thinking it is one of their hand calling, will go to meet him. A woman of this village told how she and her husband were sitting over the fire while the evening meal was cooking, when he suddenly jumped up and said he must go outside for a bit. She remonstrated and asked him to wait for his food, but he hurried off. Later he returned, complaining of feeling very ill; his belly swelled up and he died soon after. It was said that this man was very friendly with a woman named Abihi and that when he went out into the bush, he was heard calling in a low voice, "Is that you, Abihi?" When his body was examined, two punctures were found on the left side of the chest. It was supposed that it was Abihi he expected to meet and with her enjoy a cannibalistic repast, whereas it was a *jumakutala* who had called and killed him.

This brief outline of a case of sickness, suspicion of witchcraft, death, and the consultation with the water-of-lots, the witch-finder, ordeal poison, death, and the catching of the cannibal witch, has been given as a more or less connective story in order that it may be most easily understood. Some further details concerning the lot-caster, witchcraft, etc., must be added.

Lot-casting. Medicine men who cast lots were at one time fairly plentiful and were consulted on many matters, often of small importance from a European point of view. Chief of all were questions of witchcraft. The modus operandi varied in different cases. In sunsi and other important matters, the medicine man always used the *chimuyo* (divining in-

787

3: Stanzas D-5 (ca. 1912) 1922 FT7 Yao FT7

787 spoke is invariably nasal in character and Chinyanja is the language always used. It is doubtless a case of what we should call ventriloquism. The custom is evidently of Mang'anja origin but is great favor with the Yao.

787 Divination also plays an important part in tracing thieves or stolen property or in picking out from a number of people anyone guilty of some crime. Several modes of procedure
● 695 may be adopted. The *chisanga* called *ndumbo* may be used as the *chisanga cha chipeta* (*chipeta*, a kind of basket). Medicine in the form of certain roots is placed on the ground and covered by the inverted basket on which is placed the *ndumbo*. Each person in turn is requested to lift the basket and the guilty one is at once revealed by his inability to budge the basket off the ground. This method may even be used to reveal a man guilty of sexual.

787 Other methods of divination include a kind of trial by ordeal somewhat similar to a boiling water ordeal. *Kaundula* (from *ku-undula*, to tramp round, referring to the peregrinations made in search of what is lost, or *nundundu*, the Chinyanja word from *ku-lunda*, to follow on the footsteps of) is the name of the witch-doctor who searches for stolen property or traces the thief. The same man may be called *mulowndula* in Chinyanja (from *ku-ounduln*, to reveal) when he uses his instrument to detect in a crowd the person guilty of some crime. The *kaundula* uses the horn of a kudu stuffed with appropriate medicine, the actual *mizo* or *ulwa* and methods adopted varying somewhat with different practitioners. The practice I believe to be a Mang'anja one and I think most of the operators were Anyanja men and not Yao, though the Yao, as with other customs, adopted the system fully. In my district, the *kaundula* was usually armed with a rattle; when the horn indicated the guilty individual, he intimated the fact to the assembled crowd by throwing flour over him.

When a search is to be made for stolen property, the horn is put into the hands of four men, alternate men pressing down and pulling up on the long horn, while the medicine man stands by, operating his rattle and exhorting the horn to do its work of revelation. I know a man who has on several occasions assisted in holding the horn; he said it simply seemed to drag him on in a series of jerky movements, sometimes going very fast, at other times moving slowly, dragging the holders "along the footsteps of the thief with the stolen goods" in and out of the house, through the bush, and across streams, until suddenly the horn dropped from their hands to the ground, where on digging, the stolen goods were found buried. (Cf. table turning, planchette, etc.)

[114] A good description of *kaundula* under the headings *mulowndula* and *nundundu* is given by Garbutt,[1] who describes the Mang'anja operators. In this same article, he makes the mistake of describing as *nundundu*, the *fumbatula*. As I have stated above, the *fumbatula* is an order of medicine men who trap the man who is an *mumvi* while in the *mumvi* state, but the *nundundu* points him out while he appears as an ordinary man of the village.

[1] H. W. Garbutt, "Native customs in Nyasa," (Man, London, 1912, vol. 12, p. 30-42).

192

The dog.....*uwe uwe!* (as in bed).
The cat.....*ngwa!*
The cock.....*kokokoko!*
The lion.....*ho ho ho!*
The duck.....*bwa bwa bwa!*
The cow.....*mwa!*
The sheep.....*bee!* (as in letter).
The goat.....*mbe!*
The dove.....*coo coo!*
The lion.....*ng'wanang'a!*

195 578 Among the Yao, abuse and obscene language are rare; expressions which appear in other languages all the world over are only used on great provocation and commonly with dire results. This, too, is opposed to the ways of neighboring tribes, the Anyanja and Angoni, who freely make use of such expressions as "*Ngini pa mukal*" and "*Nkwapa wa mukal*" "The pudenda of your mother! Clitoris of your mother!"

The following exclamations of abuse and expressions of obscenity will be seen to follow very closely upon those in other countries.

1. *Mwinikwa!* (to a girl or woman), *mbulula!* (to a boy or man) means you are a person who has not been to your *Unyago*, and therefore "you are without manners!"

2. *Mwana mkwapa!* an expression to a child meaning "you little wretch," "you nasty little thing!"

3. *Akubile kwal kpusa!* he cuts with the back of his hand, he is uncircumcised, i.e. "he is a dirty person!"

4. A man with big ears is hailed "look at your ears like a lemur!" (*Likwaka*, a lemur).

A Yao woman seldom or never swears at or uses bad language to a man nor the contrary; the woman, however, is not behindhand in the art of bitter complaining and nagging.

[209] Pulling down the lower eyelid with the finger accompanying some exclamation has exactly the same significance as in European countries, "I am not so green as I look!"

Ku-mwa is to make a sound like "pish" with the mouth, and is a great insult, for which a man will fight.

Showing of the lips to one side as in the action to get rid of the sour skin of a fruit, *ku-mwa 'g'wapa* is an expression of contemptuous disgust.

● 695 539 The similarity to European ways is again seen in swearing or taking oath. A Yao swears by the spirits of his ancestors or by a chief:

"*Chiwi cha Mukwapa!*"
"(By) the grave of Mukwapa!"

or he may indirectly name some ancestor:

"*Ngakwikile kpungu!*" or "*Ngakwikile kulaka!*"
"I swear by the spear!" "I swear by the lion!"

3:Stanner D-5 (ca. 1912) 1922 FT7 Yao FT7

695
539

meaning I swear by the spirits of him who was killed with a spear (or by a lion), referring to some one well known to have in such wise met his end, or again:

"Kyakumbila kumala kwa wanda!"
"I swear by the faith of (all) men!"

an equivalent to swearing by the day of judgment; or again a man may swear by his own death:

"Libako lingingila ni'mapikwanda!"
"Earth may it enter (my) mouth!"

or he will intimate that his throat should be cut by drawing his finger across the neck, if he does not speak the truth.

There is a gibe around Zomba in swearing. A man saying, "I swear so and so," is asked, "By whose grave-house? *Mwali wa chawi?*" The man who is in reality only bluffing will say, "*Chakoma!* By Chakoma's grave!" Chakoma a small headman near Zomba of whom much fun is made.

Native stories. The fables or stories found among the Zomba Yao are many of them variations of well known tales, and have been collected to some extent by others. I only propose to add here five translations of a few I do not remember to have read elsewhere. 539

The Hare and the Elephant

The elephant made a big garden and planted sugar-cane. When it had grown, he asked all the other animals to come and partake of it with him. When they had all assembled, the buffalo, the eland, and all the other antelopes, the zebra and all the smaller animals, the elephant invited them to eat. He made one condition, however, anyone who, having chewed the sugar-cane, made a sucking sound as he swallowed the juice before spitting out the fibrous part would be killed (*lu-jenga*, Chin. *lu-gunda*, to suck, making the sound "ashkoh").

So the animals all sat in a long line and the buffalo started chewing his piece of sugar-cane, but when he tried to get all the juice out of his piece, he went "ashkoh!" so the elephant twisted his head till he was dead, and then picking him up, threw the carcass aside. The same fate followed for the eland, for all the antelopes and the lion, so that the other animals became afraid and would not volunteer to eat the sugar-cane but went away and the carcasses of the dead animals were buried. The elephant then appointed another day and invited the animals to come again and try.

That day, the hare came and made salutation by clapping to the elephant who demanded what he wanted, so the hare replied, "I have come to eat sugar-cane." "You know my rule," said the elephant. "Yes," said the hare, "I know your rule but I want some sugar-cane." So he was given some while all the other animals looked on to see what would happen. "Please," said the hare to the elephant, "may I have the outside part stripped

1: Tew E-4 (no date) 1950 FT7 Yao FT7

office tended to become hereditary. Each councillor had his own village which he 631
administered as a headman. A second set of officials were the court assessors, *mapungu*, who, unlike the councillors, were not in charge of villages of their own in addition to their court duties. Their office was not hereditary and they were chosen for their wisdom and their debating ability. They lived at the court of the chief and their main [692]
duty was to sift the evidence in the judicial cases which came before him.

The village headmen were expected to send elephant tusks to the chief (receiving [651]
small gifts in return), and to invite him to a yearly beer drink. Like the chief, the village headman governed through a council of the most important men in his village. They 631
constituted a kind of village court over which he presided, and in the old days he 692
could give capital sentence, or award a fine of as many as four slaves. Appeal from his decision lay to the court of the superior headman, or to the chief. Important cases would be reported direct to the chief. Most crimes would be settled by compensation. In cases of murder, several slaves were paid to the kin of the victim, and a fine for spilling blood to the chief. When compensation was handed over, the recipient always returned some part of it as sign that friendship was restored.[1]

Macdonald's further account of the treatment of crime shows how weak was the 696
political organization, in spite of the apparent orderliness of the system of inferior and superior courts. A murderer caught red-handed might be killed at once. If captured alive he might be ransomed on payment of a fine of from four to twenty slaves, [567]
some of whom might be killed to accompany the dead. If the murderer escaped a relative of his would be captured and ransomed. This applied to murders occurring among parties friendly to one another and living in the same village. If the murderer was from another village, the injured village, if strong enough, would fall upon the other and kill and enslave the inhabitants. If not strong enough, the chief might be called in to help to annihilate the guilty village.[2]

Modern Administration

631
In the whole of Nyasaland there must be between thirty and forty Yao chiefs. In 622
the districts of Liwonde, Fort Johnston, and Zomba, where 60 per cent. of the Yao 178
population is concentrated (1931 boundaries), there are at least fifteen such chiefs. Not all those who have the rank of chief in the old Yao system are recognized as Native Authorities or even as Sub-Native Authorities by the Nyasaland Administration, and many Sub-Native Authorities would be full chiefs in the Yao system, and quite independent of the Native Authorities under whom they are placed.

Nowadays the chief has lost many of his former claims to status. He no longer has monopoly of the trade to the coast, for goods are brought in by Indian traders and bought by African tobacco growers or returned labour migrants. He can no longer use his slaves to increase his wealth by running slaving expeditions. His tribute of food and ivory has ceased, and he can no longer entertain lavishly, but he is still expected to give burial cloths and to make gifts to headmen on their succession to office. Some of his councillors have been made court assessors, and are paid for those duties, but others are expected to work for him unpaid. Some chiefs do reward councillors who retain their traditional status but are not officially recognized as assessors by the

[1] Macdonald, 1882, vol. i, pp. 136–8; Stannus, 4, 1922, p. 279.
[2] Macdonald, op. cit., pp. 170–1.

2: Mitchell E-5 (1946-1949) 1956 FT7 Yao FT7

175 622 is his relatives that are the village gods. Everyone that lives in the village recognizes these gods but if anyone removes to another village he changes his gods. He now recognizes the gods of his new chief. One wishing to pray to the god (or gods) of any village naturally desires to have his prayers presented through the village chief, because the latter is nearly related to the village god, and may be expected to be better listened to than a stranger.[1]

In this quotation the word 'chief' is used for village headman. In Yao the same term is used for both the chief of the country and the chief of the village (*mwenye*).

175 672 681 696 It is clear from MacDonald's description that foreign villages were looked upon as undifferentiated wholes. When discussing punishment in general he writes:

We find that almost every offence may be punished by death, but when an offender is not redeemed, the particular punishment is left to the headman of the injured party. For instance, if a headman of Kumpama's go and say, 'Chenyono has killed a subject of mine; I have caught a subject of his and want to kill him,' the chief's answer will be, 'He has done you wrong, do according to your heart (*poli mtima wenu*).' The punishment is thus inflicted not by the criminal's own chief, but by the injured party, and it may fall, not on the guilty person, but on one connected with him.[2]

For example, he describes how some children had been carried off from Che Lomoni's village one night in 1880.

Towards the end of 1880 [he recounts], Che Lomoni, a Blantyre headman, captured two men from Mpingwi, and put them in slave-sticks. They belonged to the village that had kidnapped the children a few months before, and native law did not require proof that the men were personally guilty. They were undoubtedly innocent. Still they were kept in close confinement till their friends returned the captives in February.[3]

175 622 The village headman—called the 'owner of the village' (*asyene musi*)—was the representative of the village in all public transactions, and also the representative of such higher authority as existed, to the village members. Duff MacDonald writes: 'A chief represents and is responsible for all his people. If anyone wish to treat with a native village it is with the village

[1] MacDonald, *Africana*, i, 65.
[2] MacDonald, *Africana*, i, 186. [3] MacDonald, *Africana*, ii, 234.

692 but some also on having killed children by *ndaka*[1] (a disease caused by the mystical influence of sexual intercourse). Secondly, [673] other cases not brought to the court are petty squabbles which do not involve heavy compensation. Examples of these disputes are personal quarrels, disputes over land ownership, petty theft and so on. The Native Authority's court handles mainly cases arising from adultery, which involve compensation varying from £1 10s. to £5; and theft and assault for which similar compensation may be payable. If the case is brought up to the chief's court there is a mechanism whereby the compensation 696 may be enforced. Ordinarily, in those cases which are not tried in the court house, there is no legal sanction behind the payment of the compensation, so that if a man defaults in payment no legal pressure can be brought to bear on him. It is for this reason that such cases are tried in the court house.

695 The cases are heard by the court assessors who call the wit-693 nesses and cross-examine them. Sometimes a chief or his representative is in the court, as at Kawinga's court, but sometimes as in Chiwalo's court, the chief never comes to the court house at all. After the evidence is sifted, one court assessor takes the case to the chief and tells him about it. On the basis of the court assessor's analysis he awards compensation and imposes fines. The court assessor then takes this information back to the court house, reassembles the protagonists, and announces the chief's decision. The losing party has then the opportunity to appeal, first to the court of the Native Authority, if the case was tried in a Subordinate Native Authority's court, and then to the District Commissioner.

Cases tried by the chief in his extra-Administrative capacity are usually tried outside the court house. The same personalities take part in the trial but they act now with reference to a different set of values. The procedure is exactly the same, except that in Chiwalo's area the chief is present at the hearing. He sits somewhat aside from the main body of people but within hearing distance, weaving a mat or making nets while the case is being tried.

692 In minor cases, if either of the parties is dissatisfied with the 643 decision, he may take the case up to the chief for arbitration and, theoretically, may then take it from him if he is a Subordinate

[1] See Chap. V, p. 112.

3: Stannus D-5 (ca. 1912) 1922 FT7 Yao FT7

643 ivory by his own hunting parties or as a kind of tithe on other hunting expeditions. The ground tusk, i.e. the tusk on the side on which the elephant falls when killed, was the chief's share. In the same way, the hind leg on the ground side of any game animal killed was sent to the chief. He took a share of the spoils of war and most of his people yearly gave him either service in building houses, etc., or kind in the form of food-stuffs, but he enforced no service and levied no tax, except for the making of a new burial place.[1] New settlers in his village were expected to invite him to drink beer made with their first crops.

In return, he always provided cloth to invest the body of the dead. He also made presents at the time of *Unpaga*.[2]

A chief's life, therefore, may not be "all beer and skittles," though he consumes a good deal of the former and a kind of skittles[3] was a favorite pastime of one of the Malemyas. A saying embodying this idea was used when pleading for a man who had [538] committed adultery with his chief's wife "one who carries a tortoise (on a string over his back) is likely to get his clothes soiled"; a man has to put up with the troubles his belongings bring him. So a chief must bear with his own people who do wrong.

643 Ample opportunity for exercising such forbearance was provided, since the chief was formerly the adjudicator of all disputes and dispenser of justice in all crimes. The headman 692 did the same in a smaller way but appeal could always be made to the chief. Cases were heard by the chief sitting in council. He and his headmen and elders would assemble in the village open space and here cases were stated, often at great length.

Each party to the case would employ some man well known for his powers of oratory as leading counsel. The speaker for the plaintiff would start proceedings by a recital of all the evidence he could collect. After him would follow innumerable speakers, whether actual witnesses or not, each telling as good a story as he could, and the defendant's case would then be put by his representatives. There was no cross-examination but at the end, a summary was made and judgment given. A chief often took the advice of some one of his old men whom he trusted.[4] The chief received no payment for his services, except in the case of murder; neither did the "counsel" receive anything for their efforts.

674 Crimes. Causing the death of a person by witch medicine, *usuni*, was the most heinous [754] crime; a *usuni* ordeal might be held, but if the offense was proved, burning was the punishment which usually followed.

[684] The offense second in gravity was adultery. This might be expiated by payment or by death, according to the circumstances under which it occurred; mutilation was often [696] performed in the case of a chief's wife. All death sentences with the exception of those

[1] Vide supra, p. 264. [2] Vide supra, pp. 262, 264. [3] Vide infra, p. 282.

[4] The old Malemya (Nakatumbu) has some very fine men among his counselors. Kamtepa and Chingale, the latter renowned for his oratory, were his chief advisers in legal matters. Nkhokha, a slave, was his mentor in all personal and family affairs, while Chokumenge was in charge of all ceremonies and served with his assistant, Mpenjale, as high priest on all occasions of intervention. Others acted as his counselors, such as Mkapiti who always went on any missions to the Angoni, among whom he was known as Ndanjiro.

3:Stanaus D-5 (ca. 1912) 1922 FT7 Yao FT7

674 [696]

for witchcraft were carried out by strangling with a piece of calico at a place appointed for the purpose some miles from the chief's village.

There was no case against a man who seduced an unbetrothed girl, the latter being considered entirely at fault. [684]

After divorce, the children always remained with the mother. The man left his wife after the case, saying, "I will take my spear and some of the goats and chickens, but the children will always know their father." [586]

Murder was a question of compensation to the deceased's relatives and was not punished by death. [682]

Stealing was a serious offence but many who were found guilty were rather despised than punished. The thief with the stolen goods tied about his body but otherwise stripped naked would be driven through the village and prodded with sticks to the sound of drums and hoots of derision. Most crimes, however, might be punished by exacting compensation. Payment took the form of goods or slaves. In the case of murder, the accused might have to pay several slaves to the deceased's relatives, and in addition, a fine to the chief for spilling blood, consisting perhaps of one slave. The amount of compensation expected was mentioned by the plaintiff in the case. One of the expressions used was, "My compensation must cover an ant hill," meaning enough slaves, standing hand in hand, to surround an ant hill; ant hills in this country are sometimes very big. If a man had no slaves, he would send his relatives or he himself might be forced to become the slave of the plaintiff. There is a saying anent this practice: [685] 681

> *Chitumbili wachitwile wichila wakwe!*
> The monkey they tied (with) tail his (own).

[539]

Slaves passed over to a man in payment for crime became free men; they were an addition to the village and might even be adopted in place of a murdered individual. [567]

When compensation was made by the defendant to the plaintiff, the latter always returned some part of it as a sign that friendship was again established.

Goods or money received in compensation for murder, i.e. blood money, might not go for the purchase of food or clothing. Detection of a guilty party by means of magic and proof of guilt or otherwise by ordeal poison are dealt with elsewhere.

Bluffing anyone into giving something for nothing, obtaining goods by false pretence, was not considered a crime, as anyone was "fair game." For instance, a party of youths would waylay a man with a load of fish, saying they had been ordered by their headman to commandeer it. If the man parted with his fish, so much the worse for him; if he showed fight, he was respected and friendship made with a give-and-take of fish and snuff. Such bluffing is called *kulpa nawa*, "to eat with them." To add to their appearance of *bona fides*, the party might have secretly borrowed some well-known article belonging to their headman. 674

2: Mitchell E-5 (1946-1949) 1956 FT7 Yao FT7

175 2. Free men are under their elder brother in the first instance, but they may carry their cases to the headman of their village or even to the chief of the country.
565
622 3. Slaves were entirely under their own master.[1]
643

The headmen's subservience to the chief is described in the following passage:

In all public transactions the headman represents his village. He receives the chief's orders and sees them carried out. When he kills an elephant he sends one of the tusks to the chief. Should he kill [651] twenty elephants he is not expected to give up twenty tusks—two or three would be sufficient. If he shoots a large buck he gives one haunch of venison. For all such tributes he expects to receive in return a present (generally a little powder). . . . He is expected to [646 attend the chief's parliament unless he is under an elder brother in 593] which case he is not allowed to speak, except when especially commissioned. Headmen are expected to report all cases of war, but they often attack enemies without telling their chief beforehand, saying, [721] 'Let him hear of the enterprise when it succeeds.' Yet this is dangerous unless they are sure of success, and well acquainted with the chief's private sentiments. On reporting an attack they present the chief with part of the booty. In times of war each headman when summoned, must follow his chief's flag, otherwise his village is burned [687] down, and all that fail to escape are killed or enslaved.[2]

175 Yet within the framework of this organization villages were markedly autonomous. MacDonald's description, which I have 578 just quoted, brings this out very well. Elsewhere he writes: 622 'The chief may often have less influence than powerful headmen, 643 and we have known cases where he simply contented himself with grumbling when his headmen acted contrary to his desire.'[3] The chief did not differ greatly from his more powerful headmen. A certain amount of ritual in terms of ancestor worship embellished his position, and he had some ascendancy over village headmen to whom he had given land. Yet, in the last analysis, the chief had to rely on his personal following and military power to subjugate headmen who were becoming too powerful. The chief was therefore in direct competition with his subject village headmen, and involved in a constant struggle with them for followers. MacDonald describes how the chief himself was a

[1] MacDonald, *Africana*, i, 155.
[2] MacDonald, *Africana*, i, 157. [3] MacDonald, *Africana*, i, 155.

3: Stannus D-5 (ca. 1912) 1922 FT7 Yao FT7

that she is tattooed more profusely on the buttocks and legs. The circlet of beads was formerly made like *mapunde* with a bark-cloth core, called *mhumbo* or *mbule* (*ku-oula*, to slip off), referring to the *mbule* being slipped off over the legs. The fashion now is to wear single strings of beads; each string is of one color but all the strings are different and perhaps number a dozen or more.

Lipamba: a bead belt three-inches wide, worn by Yao women near Lake Nyasa. A bead apron, *Nanjova*, is also worn by them but not near Zomba (Pl. VI, fig. 2).

A woman removes her beads when she is "unclean," that is: (a) during the menstrual period, (b) during the period of mourning for a near relative when coitus is forbidden, (c) before the birth of a child and afterwards until such time as she may resume intercourse with her husband.

A large variety of beads has long been used by the Yao. There are some rarely seen now which were much prized in years gone by, while others are of quite recent introduction. There is no evidence that they themselves made beads and there are few which are probably not of European manufacture.

Clothing. The Yao used bark-cloth before the introduction of woven materials. The older people may still be seen in it and it is used in most of the ceremonies. At one time, they also used to weave a cloth called *likwambo* from a native cotton plant. This has been given up since the introduction of imported materials.

For the method of wearing cloth, see Pl. II, fig. 2. The very poorest people wear only a strip of calico round the pudenda, held in position by a string round the waist hanging long behind and in front; this is called *mthetha*. Yao women, when menstruating, wear under this a little piece of cloth called *likumbi;* it is only worn at this time and not always as in certain other tribes.

Warfare. Fighting has naturally played a large part in the life of the Yao as among other African tribes, but at no time were these people a trained fighting race. Warfare was of a desultory character consisting mostly of raids by one feudal chief upon another. A party of men belonging to a chief at enmity with another, meeting some of his followers would challenge them, "*Alumbe*, who are you for?" The name of the rival chief in answer was the sign for battle to begin. A fake answer would never be given to gain an advantage. When about to throw a spear, the thrower calls to his adversary.

The Yao have possessed guns for a long time. Going out to fight, the Yao used to leap from one foot to the other, and spin their guns around in their hands. They made their own stocks for the rifles. They also used to make a small, cast-iron cannon about three feet long, called *kambula*, "a little nose." It was carried in the arms and was touched off by a torch. Drums called *sanje* were taken into battle. There is an old war drum at Malenya's village, taken in 1885 by the old Malenya from a Mang'anja chief called Mkuhumbo who lived near Lake Chiuta. Since then, this drum has always gone into battle with Malenya. Around it his men would dance and anyone who had killed a man in battle would run up to it and spit upon it in salutation.

3: Stanner D-5 (ca. 1912) 1922 FT7 Yao FT7

175 167 648 River at Mpimbi where they intended to settle. Here, an old chief, knowing that their presence would cause trouble, persuaded them by tales of many cattle far away on the other side of the river, to cross over, and there they remained.

Kawinga and Malemya, then, to avoid further raids from the north went down to the Upper Shiré River near Lake Pamalombe, Kawinga going to Mvera, while Malemya stayed on the east side of the river among the Anyanja, claiming friendship with them because they bore many of the same clan names. Later, Malemya moved up to the highlands about fifteen miles north of what is now Zomba, and Kawinga went to Chikala. Malemya was friendly with the Anyanja chief, Chenyani, who was of his clan, and was therefore able to buy from him for a red blanket all the country from the Likwenu stream to the Namadzi River, a district thirty to forty miles long. There his people settled. [131]

Kawinga was once again attacked by the Makwangwala from the north, but beat them back, after which they returned to the country whence they came — German East Africa near Lake Nyasa. The Angoni chief was killed in this battle, and the story goes that two Yao captives were told off to carry the eviscerated body back to the Angoni country for burial. As they were not provided with food for the journey, the two men began to eat the corpse. After several days, this was discovered; one of the men was killed but the other escaped to tell the tale. These were barbarous days, and the Yao relate that after raiding a village, the Angoni would leave a pot cooking on the fire with the body of a child in it, well covered with beans, so that when they had gone away with their booty and the villagers who had taken refuge in the forest returned hungry, they would start eating the beans and then come upon the body of the child, and having eaten of the juices of a human body, they would have committed a terrible sin. [726] 266

The immigration of the Amachinga into the country around Mangoche mountain caused the Amagoche Yao settled there to move. They passed into the Blantyre and Mlanje districts, and invaded the country of the Anyanja. The chief, Malemya, known as Nalutumbo died about 1880, and was succeeded by his nephew, a sister's son, according to the Yao custom. This nephew, Wandalama, then took the name of Malemya.

In consequence of this succession, there was considerable bad feeling between Wandalama and the other aspirant to the chieftainry, his cousin, Kumtaja. The latter moved down to the plain below Zomba mountain to the south, where he gathered about him a band of friends and malcontents. Malemya decided to attack him and with this purpose, sent two messengers, Nkopili and Mapondela, asking Chikusi and his Angoni to come and do the job for him. Led by Nyamuka, Njewmoli, and Kabayi, the Angoni came from the Shiré River opposite Blantyre, via Matope. They attacked and routed Kumtaja who, owing to the thick country, managed to fall back with most of his people toward Lake Chilwa. Here he was received by his cousin, Chimombo, a son of Nalutumbo, and father of my interpreter, Chenga, who ruled among the Anyasa. Afterwards, he moved to Mpimbi on the Shiré where he built a stockaded village.

* Died July 14, 1914.

30 [548] that she is tattooed more profusely on the buttocks and legs. The circlet of beads was formerly made like *cupande* with a bark-cloth core, called *mbende* or *mbede* (*ku-ende*, to slip off), referring to the *mbede* being slipped off over the legs. The fashion now is to wear single strings of beads; each string is of one color but all the strings are different and perhaps number a dozen or more.

Lipamba: a bead belt three-inches wide, worn by Yao women near Lake Nyasa. A bead apron, *kinjera*, is also worn by them but not near Zomba (Pl. VI, fig. 2).

A woman removes her beads when she is "unclean," that is: (*a*) during the menstrual [783] period, (*b*) during the period of mourning for a near relative when coitus is forbidden, (*c*) before the birth of a child and afterwards until such time as she may resume intercourse with her husband.

A large variety of beads has long been used by the Yao. There are some rarely seen [177] now which were much prized in years gone by, while others are of quite recent introduction. There is no evidence that they themselves made beads and there are few which are probably not of European manufacture.

291 Clothing. The Yao used bark-cloth before the introduction of woven materials. The older people may still be seen in it and it is used in most of the ceremonies. At one time, they also used to weave a cloth called *likamombe* from a native cotton plant. This has been given up since the introduction of imported materials.

For the method of wearing cloth, see Pl. II, fig. 2. The very poorest people wear only a strip of calico round the pudenda, held in position by a string round the waist hanging long behind and in front; this is called *mbetbe*. Yao women, when menstruating, wear [841] under this a little piece of cloth called *likumbi;* it is only worn at this time and not always as in certain other tribes.

721 Warfare. Fighting has naturally played a large part in the life of the Yao as among other African tribes, but at no time were these people a trained fighting race. Warfare was of a desultory character consisting mostly of raids by one feudal chief upon another. A party of men belonging to a chief at enmity with another, meeting some of his followers would challenge them, "*Alumbe*, who are you for?" The name of the rival chief in answer was the sign for battle to begin. A false answer would never be given to gain an advantage. ● 726 When about to throw a spear, the thrower calls to his adversary.

The Yao have possessed guns for a long time. Going out to fight, the Yao used to leap from one foot to the other, and spin their guns around in their hands. They made [771] their own stocks for the rifles. They also used to make a small, cast-iron cannon about three feet long, called *kambuja*, "a little nose." It was carried in the arms and was touched off by a torch. Drums called *ngoje* were taken into battle. There is an old war drum [534] at Malunya's village, taken in 1895 by the old Malunya from a Mang'anja chief called Mkukumbo who lived near Lake Chiuta. Since then, this drum has always gone into battle with Malunya. Around it his men would dance and anyone who had killed a man in battle would run up to it and spit upon it in salutation.

3:Simmons D-5 (ca. 1912) 1922 FT7 Yao FT7

Other hypothetical diseases which are caused by disobedience to custom are mentioned under various other headings. *Kwipe:* a disease generally characterized by ulceration of the legs but in some cases by pains in the back, or loosely used for a variety of symptoms, is said to be caused by the entry into the body of a worm which lives in water-pools. This worm which I have had identified is a guinea worm and not known to be parasitic in man. *Lusui:* When a man kills another in battle, he will slit open the belly of his victim; otherwise he believes he will sicken with *lusui* and his own belly will swell up like that of the corpse when putrefaction sets in. He is supposed also to hunger after more killing and blood. *Likenge* is the name of a supposed disease which kills off one child after another in a family when they are about six months old. Congenital syphilis naturally suggests itself but I have never been able to verify this idea. *Likenge lya kutuin:* a supposed disease which causes the death of the first child when the second is born, the second when the third is born and so on, whatever the intervals between the births. Each child is said to push (*ku-tuin*) the previous one out of this world. Under these circumstances the disease is ascribed to something wrong with the mother or father and they are examined by a medicine-woman or medicine-man, and any carunculae or an external pile found will be cut away.

164 192 753 688 [725] [727]

If a snake inflicts two bites, the case will prove fatal. If a crocodile emits a grunting sound when seizing its victim, though he escape he will certainly die. [725]

Treatment of disease. Of surgical treatment there is very little to be noted. Nothing in the way of operation is performed with the exception of circumcision (see *Lupanda*). 757 [752]

An abscess is allowed to burst, the smallest tumor is left untouched, but accessory digits which are not rare, attached only by a fine pedicle, are snipped off. [752]

The natives cannot extract teeth. They are incapable of rendering any assistance in cases of difficult labor. Dislocations are not recognized as such, but fractures are treated by the application of wooden sticks placed at intervals round the circumference of the limb parallel to it and held in position by twisted pieces of bark string (Pl. XXII, fig. 3). The principle of the tourniquet appears to be unknown. 752.

The only instruments used consist of a small knife for incision, a cupping-horn, and a primitive form of funnel for administering enemata (Pl. XXII, figs. 1, 2, 4). The knife has a triangular blade with a stem which is commonly twisted at one of the corners. The knife is used for wet-cupping, tatooing, and circumcision (Pl. XXII, fig. 3). The cupping-horn is a small horn of a calf. The apex is pierced and after application to the part, suction is made with the mouth and then the hole sealed by working a piece of beeswax over it with the tongue. Six small incisions are made in the skin for the withdrawal of the blood. The cupping-horn is called *chawi* (*tshwiko*, Chin.). Cupping is used for headache and for pain in the chest and back. The enema funnel, *chipelpe* (*ntwibiri*, Chin.) is made from the neck of a gourd to which is attached a hollow straw for introduction into the anus. Half a pint of an infusion of *mapaio* is injected for constipation associated with pain. 413 752. 757

2: Mitchell E-5 (1946-1949) 1956 FT7 Yao FT7

Native Authority, to the Native Authority, and eventually to the District Commissioner if the case is one which he will countenance. In practice, most cases reach the chief and go no further. Most people accept his decision. Thus the chief has important judicial functions. 692 643

The Chief as his People's Representative

In special situations where the welfare of the chiefdom as a whole has been endangered by an infringement of the mores, the chief may take action. For example, a chief prosecutes a village headman who allows a woman in his village to bear her first child before she has been through the *litiwo* ceremony. Every woman who becomes pregnant for the first time must undergo this ceremony, during which she is instructed in child welfare and child care. If she bears a child without undergoing the ceremony, she is said to have 'spoilt the country' (*ajalwice cilambo*), in the sense that she has besmirched its reputation.[1] 643 687 843

Chiefs usually call in magicians 'to smell out' those responsible for keeping back the rain.[2] When the rains fail as they did in 1948–9, their failure is held to be due to the magic of some evilly disposed person. It then becomes the chief's duty to call in a magician to indicate who this person is. The fees for this duty are paid by the chief himself on behalf of his people. 643 787 821

The chief also acts as a representative of his people when they are affected as a whole. For example, Nyambi called in a magician after man-eating lions had taken some of his subjects. This magician called for the hearth-stones and domestic utensils from all the villages in the area, and built them up into a pyramid over which he made some anti-lion medicine. This was to clear the whole chiefdom of man-eating lions. 643 789 731

Nowadays, the chief's representation of his people is seen most clearly in his position in the Administrative framework.[3] The chief represents the Administration to his people since they approach it through him. At the same time the Administration clearly treats him as the representative of his people and consults 643

[1] I was told in Mponda's area that the women undergo this ceremony *after* the birth of the child, but that it is still obligatory.

[2] *Kutowa ula*—lit. 'to tie or bind the rain', in the sense of to make it a prisoner.

[3] I have dealt with this aspect more fully in 'The Political Organization of the Yao of Southern Nyasaland'.

2: Mitchell E-5 (1946-1949) 1956 FT7 Yao FT7

593 brother, is called *anyone mbumba*, or 'the warden of the sorority-group'. As one would expect among a matrilineal people, the link between a man and his mother and sisters is strong. But it is the link with his sister that is strongest. She relies on him for protection, particularly when she becomes ill, but also in her [582] relationships with her husband. Her brother will be her junior marriage surety, and he will give the consent which will allow a man to marry her. Also a woman's brother will have to consult the diviner and find the medicines when she or her children [731] sicken. In times of distress, as, for example, if her crops have failed, she will appeal to her brother for help. Similarly the man is dependent on his sister in a number of subtle ways. He can always rely on her for hospitality, and is able to get a meal from her if he needs it. But his dependence on his sisters for prestige is much more important. The significance of this will emerge when we see the *mbumba* organization in the light of the segmentation and fusion of the lineage. A man can only found a new village if he has the full support of his sisters. A sister also plays a most important rôle at the birth of his children. She represents him both at the first foetal-quickening ceremony and at the birth of his child, when she listens to the birth-pang confessions of his wife.[1]

At the same time the relations of sister and brother are restricted by custom. A man must never appear too familiar with his sister, especially in sexual matters. He may not, for example, [513] sleep in the same hut as she does; if she is away and he sleeps in her empty hut he must not make his bed in the place where she usually sleeps. He may not even sit on her sleeping mat. [835] Authentic cases of incest with a sister are extremely rare, whereas I recorded three or four cases of father-daughter incest while I was in the field. Supposed cases of brother-sister incest are recounted and discussed widely. This is understandable because [754] a man who is suspiciously familiar with his sister is suspected of being a sorcerer, since it is widely believed that a sorcerer usually obtains the power that he needs for the performance of his dire deeds by sleeping with his sister. The riddle of the initiands—'What is the sweetest fruit which may not be tasted?' Answer, 'Your sister'—neatly reflects the attitude of the Yao.

The close link of brother and sister is also reflected in the

[1] The significance of this is explained in Chap. VII, p. 183.

769 A man leaving his village on some expedition and wishing to be assured of safe conduct
489 will procure some millet flour. Going quietly into his house, he squats down in one corner
787 and gently sifts the flour through his hand so that it falls on the floor in the form of a little cone, repeating as he does so, his prayer for safe conduct beginning and ending with the word *chondo! phoma!*

[539] "*Chondo! chondo!* [illegible] [illegible] [illegible] [illegible] [illegible]
"Phoma, phoma! [illegible] [illegible] [illegible] [illegible] [illegible] that I may see
[illegible], [illegible] [illegible] [illegible], *chondo! chondo! chondo!*"
the path, may I arrive well where I go, phoma, phoma, phoma!"

He then covers the cone of flour with a basket. On the morrow, he will uncover it to see what has happened. According as the cone has remained intact or has fallen to one side or the other, the cone indicates whether or not the journey should be undertaken, the question being vetoed by the spirits to whom his supplication was addressed.

769 Again, there may have occurred much sickness in a village and the people conclude that the past has come to remind them that they have not been attentive to their deceased chief. "His grave-house in the village has been allowed to fall into decay," and so on. They will decide that his spirit must be propitiated. The grave-house is rebuilt, a pot is sunk in the ground, and beer is poured in, and round about heaps of flour are placed. Prayer is made to the chief at whose grave they are worshipping, supplicating him in person and "all others who are with you at *Milanga*," asking that he will no longer cause ill to befall the village.

When a village is moved, the beer-pot from the grave of the old chief is taken to the new village and a ceremony similar to that just described takes place, with the prayer that he will come to the new village and continue to exercise his beneficient care over his people.

731 In 1900 when there was a threatened famine on account of long drought in Sonka district, Malenya decided that supplication for rain must be made to the spirits of his illustrious predecessors. Kanenga, one of Malenya's wise men, acted as high priest. A large amount of beer was brewed and the night before the ceremony, twenty sheep and fifty goats were slaughtered. Plates of the meat, of rice and porridge were then placed on the ground round the grave-house of the old Malenya, and pots of beer set into the ground at intervals. At the head of the grave, little heaps of adepoi flour were arranged. This flour had been prepared by each of Malenya's wives as were not near a menstrual period. The following morning, a fence was built round the grave, outside which all the people collected, while beyond there again was a second fence. Kanenga, accompanied by an assistant then appeared, and amid absolute silence entered the inner enclosure. He addressed to the old Malenya, at whose grave they were all assembled, a prayer for rain. He then repeated the prayer, invoking the aid of all the past line of chiefs down to the reigning Malenya, repeating their names. Returning to the outer enclosure, he again uttered the prayers, all the assembled multitude repeating them after him while lying face down, resting on their

[514]

3:Stanner D-5 (ca. 1912) 1922 F77 Yao F77

516 758 769

knees and elbows, at intervals swaying their bodies from side to side and clapping their hands. Kamanga then ordered all to go and bathe, men and women separately. As they returned from the stream, rain began to fall.

755 769

Intercession on behalf of the sick may be made, especially by anyone who is likely to be accused of causing the illness by witchcraft.[1] The man standing with arms outstretched, downwards and a little in front of his body, the hands supine, takes some water in his mouth and discharges it in a stream on the ground, (probably as a sign of purification of his tongue), and then invoking "all the spirits above," asks that they will intercede to restore health to the sick man and bear witness to his own innocence of any wish to do the sick man injury. *Ku-pempa* is the word meaning to offer sacrifice and prayer.

769

Harvesting and hunting are occasions when sacrifices may be offered. It was formerly the custom for the chief to determine the day on which harvesting of millet should begin. On the day appointed, a big drum was beaten in the village and word passed round; then everyone would go down to his garden, gather a load of millet, and bring it back to the village where it was all handed over to the chief's headwife. After drying and threshing, a little of the grain was laid at the grave of an old chief by one of the reigning chief's advisers, the remainder being again distributed to all the people gathered together in the village meeting-place, who ate it raw. After this ceremony, harvesting began.

241 782

In passing through a millet garden, if a child asks his mother to give him some to eat, she plucks a branch or two and reverently laying one at the foot of a *mwere* tree for the spirits or at the base of some other tree, if she cannot see a *mwere*, she gives the rest to the child.

782 224

When a hunting expedition makes its first killing, part of the flesh of the animal is laid at the base of a tree as a thank offering to the spirits and in anticipation of further favors to be conferred. All such offerings are supposed by the natives to be partaken of by the spirits, though they are well aware that they do not actually diminish in quantity. There is an interesting point in this connection: any man who has acted as *mbile* (undertaker) to some well-known man may appropriate these offerings. In the case of the hunting offering, he will run round the tree, saying, "I am a hyaena, the spirits will not mind me," and will then take part of the flesh-offering and eat it.

In the same way, a *mbile* may drink from a grave beer-pot after three days, when the spirits are supposed to have taken what they want.

824 778

With the exception of the *mwere* tree above mentioned (*mbiwa*, Chin.), and possibly another called *mchi-mpanu* (Chin.), which is never used as firewood and which is supposed to be used by *mwami*, I do not think there are any sacred trees properly so-called. Miss Werner supposes that many of the big trees (often a species of *Ficus*) in villages are sacred.[2] The truth is, I believe, simply that a village is made naturally round a big tree which conveniently offers its shade for the village meeting place. The spirits of deceased chiefs may

[1] *Kuk-mpera*, p. 187.

[2] The native of British Central Africa, op. cit., p. 46.

3:Stanner D-5 (ca. 1912) 1932 FT7 Too FT7

Other hypothetical diseases which are caused by disbelieve to customs are mentioned under various other headings. *Kwiye*: a disease generally characterized by ulceration of the legs but in some cases by pains in the back, or loosely used for a variety of symptoms. It is said to be caused by the entry into the body of a worm which lives in water-pools. This worm which I have had identified is a gordian worm and not known to be parasitic in man. *Lumi*: When a man kills another in battle, he will slit open the belly of his victim; otherwise he believes he will sicken with *lumi* and his own belly will swell up like that of the corpse when putrefaction sets in. He is supposed also to hunger after more killing and blood. *Lilungu* is the name of a supposed disease which kills off one child after another in a family when they are about six months old. Congenital syphilis naturally suggests itself but I have never been able to verify this idea. *Lilungu lya bulale*: a supposed disease which causes the death of the first child when the second is born, the second when the third is born and so on, whatever the intervals between the births. Each child is said to push (*bu-tula*) the previous one out of this world. Under these circumstances the disease is ascribed to something wrong with the mother or father and they are examined by a medicine-woman or medicine-man, and any carunculae or an external pile found will be cut away.

If a snake inflicts two bites, the man will prove fatal. If a crocodile emits a grunting sound when seizing its victim, though he escape he will certainly die.

Treatment of diseases. Of surgical treatment there is very little to be noted. Nothing in the way of operation is performed with the exception of circumcision (see *Legends*).

An abscess is allowed to burst, the smallest tumor is left untouched, but necessary digits which are not sore, attacked only by a fine pedicle, are snipped off.

The natives cannot extract teeth. They are incapable of rendering any assistance in cases of difficult labor. Dislocations are not recognized as such, but fractures are treated by the application of wooden sticks placed at intervals round the circumference of the limb parallel to it and held in position by twisted pieces of bark string (Pl. XXII, fig. 3). The principle of the tourniquet appears to be unknown.

The only instruments used consist of a small knife for incision, a cupping-horn, and a primitive form of funnel for administering enemata (Pl. XXII, figs. 1, 2, 4). The knife has a triangular blade with a stem which is commonly twisted at one of the corners. The knife is used for wet-cupping, tattooing, and circumcision (Pl. XXII, fig. 2). The cupping-horn is a small horn of a calf. The spout is pierced and after application to the part, suction is made with the mouth and then the hole sealed by working a piece of beeswax over it with the tongue. Six small incisions are made in the skin for the withdrawal of the blood. The cupping-horn is called *chumi* (*ichumbu*, Chin.). Cupping is used for headache and for pain in the chest and back. The enema funnel, *chipulpu* (*ichitulu*, Chin.) is made from the neck of a gourd to which is attached a hollow straw for introduction into the anus. Half a pint of an infusion of mangoes is injected for constipation associated with pain.

3:Stanner D-5 (ca. 1912) 1922 FT7 Yao FT7

Thagulugu was another well-known performer; he used to do the same tricks as Kambanje. He also was possessed of an elastic skin and is said to have been able "to tie his ears together behind the back of his head." 789 791

Mpachetula, a Yao of Mikanda, is a man with considerable renown. He is said to be able to produce a lion at will from a lion's tail and claw. He would offer to show this if there were any knew enough to go through with it. On a moonlight night, he would expose on the ground in a cleared space near a village the tail of a lion held cross-wise in a piece of split bamboo. At the split end of the bamboo, he would place a lion's claw and round this, a woman's hair held in position by three bamboo pegs, around which he would draw a circle of wheaten flour. Everyone would then withdraw to a hut in which the seance was to take place. After an hour or so, Mpachetula would send some one out to inspect the lion's tail where probably all would be found intact. He might then pretend to be uninterested and sleepy and suggest that some one should go out again in half an hour. Sooner or later, a man would come back, having found the tail gone; then everyone would go out to see what had happened. The pegs would be found in place but the tail and claw gone. A little way off, the split piece of bamboo would be found and further still a bead or two from the woman's hair. Then, Mpachetula would pick up, and leaving a little trail of flour on their way, all returned to the hut, while he whistled as if calling some one. Suddenly they would be aroused by the sound as of a lion brushing against the hut walls, as the beasts are known to do, and next, a loud roar. Mpachetula would immediately open the door half-way so that the people could look out into the moonlight and there, a little way off, would be the lion. It would immediately advance towards the house and then, as it prepared to spring for the door, Mpachetula would offer it some of the flour in his left hand, armed with a stirring-stick, entire, in his right hand. As the lion landed, he would strike it on the head with the stick and lo and behold! the lion would vanish and the tail and claw would be found in his hand.

Superstitions. Scattered throughout these notes, particularly under *Usual* and *Disease*, 771
mention is made of practices which show a strong belief in superstition. Below are given 784
a number of minor beliefs, and it is interesting to compare them with many well-known superstitions in other parts of the world.

1. A child who cuts the upper incisor teeth first will be unlucky. Such children used [777]
to be killed by the Yao. (Other tribes make medicine against the threatened ill-luck.)

2. A woman with polydactylism may not take food out of a corn-store. Otherwise the [732]
stock of corn will not last long. (Rudimentary sixth fingers are not uncommon.)

3. An insect called *chiqaw* *maui* which lives in the mud at the bottom of pools, if killed [823]
causes the water to dry up.

4. If a boy puts a water-spider in the armpit when learning to swim, he will learn quickly.

5. A man wishing to prevent rain falling on a day he is making a journey, will wrap [824]
some of the leaves of the *mimomel* tree in his kilo cloth and go without drinking.

1: Tew . E-4 (no date) 1950 FT7 Yao FT7

775 Kangomba, used to persuade Nyanja to help in the sacrificial rite. When Kaponi in
782 turn fled to Mount Soche from the Ngoni, and died there, the Yao addressed their offerings to him, not to Kangomba.[1] The word *Mulungu* has sometimes been interpreted to mean Supreme Being, God, Creator, but among the Yao it seems not to have
[774] a personal connotation. It was used to describe the agent in any mysterious event,[2] or the place where the ancestor spirits (*mazuka*) were supposed to dwell. Daily life was
[769] full of acts of respect towards the ancestors, who were regarded as jealous of the living, and requiring constant propitiation.[3]

Sorcery

754 Accusations of witchcraft and measures for dealing with it play a dominant role in Yao social life. With certain exceptions nearly all diseases and deaths are thought to be caused by sorcery. The exceptional causes are: the hand of God, old age, the transgression of certain taboos, and battle wounds. If sorcery is suspected the relatives of the sick or dead man consult the diviner to identify the offender.

Yao (in common with the Maravi and many peoples of Central Africa) believe that sorcerers have a craving for human flesh, which they satisfy by killing with magic the victims of their malice and hatred. They acquire their magical powers by an apprentice-
[735] ship, which might include incestuous relations with mother, sister, or mother-in-law, or sleeping on the grave of the mother for one night. The sorcerer then learns the medicines and finally demonstrates his power by killing a young relative by magic;
[766] he waits till the victim is buried, and then magically exhumes him for the secret feast with his fellow sorcerers. Each sorcerer who shares the flesh owes a debt to the one who secured the victim.

[759] Charms are used as preventive measures against sorcery. When a diviner has
754 diagnosed the cause of death as sorcery, retaliatory measures are taken. The headmen
683 of the village could either call in the witchfinder to identify the offender or he could call in the diviner to take action against all the sorcerers in the village. After the
[695] diviner, *Mabinabin*, had revealed the guilty ones, they were challenged to take the poison ordeal to prove their innocence. If they died, the proof and the punishment were simultaneously accomplished. If they survived, the diviner was held to have been at fault and they were acquitted. The witch doctor was supposed to entice sorcerers to the graveside, and slay them with magic more powerful than their own.

[695] The diviner's findings are to-day checked by the poison ordeal administered to a chicken. A sorcerer detected in this way might be asked to provide medicine for the man whose sickness he had caused, or after a death he might be compelled to pay compensation. If the accused is a village headman, he will not be summoned before a chief, but his brother will take the villagers away from the sphere of his influence, or he may be chased away from the district. Accusations of sorcery follow certain regular lines. Nearly all accusations fall on relatives. Diviners are consulted by matrilineal relatives of the sick or dead person, and the man most usually accused is the brother of the accuser, or the husband of his sister. Witchcraft is therefore a manner of expressing the hostilities latent in these relations, which are, in the Yao social system, full of tension.

[1] Macdonald, 1882, vol. i, p. 70.
[2] Hodoul, 1933, pp. 14-15; Macdonald, 1882, vol. i, pp. 58-59, 214-15.
[3] Hetherwick, p. 1902.

2: Mitchell E-5 (1946-1949) 1956 FT7 Yao FT7

142
291
301
751
643

PLATE I

CHIEF KAWINGA THE SIXTH

He wears the traditional necklace of lions' claws which are medicated to protect him from the bullets of his enemies.

[facing p. iii]

2: Mitchell E-5 (1946-1949) 1956 FT7 Yao FT7

Further enquiries may reveal that this is only a section of a larger village, possibly a hundred or more yards away. 622

The boundaries of a village may not always be clear. Clusters of huts which are part of one village may be physically nearer another, but in the minds of the Yao, who see not only the huts but also the social relationships of the people occupying them, there is no confusion at all. As a general rule the villages are fairly compact and clearly demarcated from others, and even strangers have no difficulty in recognizing the autonomy of the group which is expressed in many different ways. MacDonald recorded that formerly a headman performed a certain amount of ritual which symbolized the unity of the village.[1] Much of this has fallen away, but the unity remains. 621

The ritual surrounding the foundation of a new village bears testimony to its persisting political significance. In this ritual the unity of the group, against other similar groups, including the village from which it has sprung, is expressed. On first arrival at a new village site the men build grass sheds, beginning with that of the headman. That night the headman pours a cone of sacred flour at the root of a tree on the site, and asks the spirits of his ancestors whether the site is propitious. Early next morning he examines the cone to see the answer. If a side of the cone has collapsed it does not augur well and another site is selected. If the cone is still whole it is taken that the spirits acquiesce, and permanent huts can be started. The headman then goes into the bush to find medicines[2] which he mixes with groundbeans. That night, with the medicated groundbeans in the hut, the headman has intercourse with his wife. In the morning those who are not sexually active come to the headman's grass shed to drink some water in which the medicine has been steeped and eat some of the medicated beans with a little porridge, which the headman's wife has prepared from the sacred flour. This medicine is called 'the medicine to strengthen the village' (*mtera wakulimbika mzi*). Until then all members of the village should have been continent but after this sexual relationships may be resumed. The object of the medicine is to prevent those 622 621 787 622 621 751 834 370

[1] See pp. 32-2.

[2] *Nkhungwe* and *ulunu*, two plants commonly used for protection against witchcraft. See *l.c.*, p. 112. 627

2: Mitchell E-5 (1946-1949) 1956 FT7 Yao FT7

who are sexually inactive from contracting *ndaka*.[1] At the same time the headman gives each household a piece of the fire which has been newly kindled in the traditional way by rubbing two sticks together.

The mystical danger inherent in the act of setting up a new village is well brought out in the propitiatory prayer and the abstinence from sexual intercourse. Once again it is the village headman who must make the offering to his ancestors; and it is the village headman who has intercourse with his wife so that the effluvium from his sexual activity may permeate the medicine in the hut and so protect the villagers from *ndaka*. Lastly, it is very important that the whole village cooks and is warmed by one fire. 'We are of one fire' expresses the common origin of two villages; though in fact every time a new village is founded a new fire should be kindled. To bring fire from the village of origin is to bring sorcery, since the Yao believe that sorcery can operate between persons closely linked by kinship only. To have one's own fire is to be autonomous from other groups.

The Burdens and Rewards of Headmanship

MacDonald had the perspicuity to see not only that the village headman was the representative of a corporate group and that he represented this group to outsiders, but also that he represented external authority to his villagers. The village headman who in his person stood for the unity of the group, performed certain ritual acts which emphasized this, such as praying to the village ancestors. In spite of the decline of the ritual his position is still regarded as exceptional. Much, however, depends on the rank of the village headman. There may not be much difference in ritual observances and mystical dangers between a headman who has in his charge a meagre three or four huts, and a commoner. In the larger and more important

[1] This is one of the most important mystical concepts of the Yao. I have described this condition and its implications more fully in *Marriage among the Machinga Yao of Southern Nyasaland* (R.-L.I. Paper), forthcoming. Briefly it is a disease characterized by oedema which affects those who are sexually inactive when they are suddenly brought into contact with a person, or an object which he has touched, after having intercourse. The people most affected are the young and the old, i.e. those who cannot have sexual intercourse. Those who are capable of intercourse are expected to have ritual intercourse with a stranger, and so fortify themselves against this dread disease.

2: Mitchell E-5 (1946-1949) 1956 FT7 Yao FT7

622 neglect neither his sorority-group nor the husbands in his village,[1] that his sorority-group and his village were his garden and he must take care of the young plants in it. The husbands were the watchmen who look after the women in the village. A headman dare not take sides or be unfair, nor must he talk behind people's backs. He must take care to settle differences amicably by discussion at meetings. They advised him not to pay too much attention to his wives who may have quarrelled with his sisters and tell him that they have been insulting him. When he hears a report like that he may be unfair to his sisters and people will say that he has broken his village through listening to nonsense. This sort of instruction went on through the night.

On Friday when the beer was brewed, Mlamba and Mbalwe, both headmen and perpetual sons of Nyambi, came to the village [344] and told the men to build a small grass shed for the successor to sit in. This the men did, and the women were told to plaster it and clean the huts out for the strangers who would be coming to the ceremony. On Saturday morning before cockcrow, Makoka and Ncimba got up and told the women to cook a big pot of porridge because they were taking Cimombo to bathe and when they returned they would want to find porridge ready. [415] Makoka took some medicine called *mkulumo* in a bark container (*likungwa*) into the toilet enclosure. He put the medicine into • [751] two jars of water and told Cimombo to wash himself in it daily as he was an important headman, and it would strengthen his body.[2] After Cimombo had washed he went back into the hut 622 where a mat was spread on the floor and on it were a dish of 266 porridge and three dishes of relish. Makoka and Ncimbo told him to take a little porridge, dip it into one of the relishes—whichever he chose—and eat it. Cimombo did so. They did not tell him that one of the dishes contained human flesh.[3] When he tried the dish of human flesh he vomited and all the villagers cried with joy, saying that he was a good chief because he had

[1] *Mbumba jao ni akamwini wao*—the meaning and significance of this in the village context is explained on p. 183.

[2] This is a euphemism for protective medicine against sorcery.

[3] The immediate question is: Where did the human flesh come from? No informant could tell me and I am inclined to believe that one of the dishes is 'ritually' made into human flesh for this ceremony. This special ceremony was always spoken about as if it were secret, especially from White people.

881 in turn. After drinking, they sit down while the *n'michila* gives instructions that here they
[533 sleep tonight. He takes his basket and starts to run back to *Lupanda*, singing:

"*Ku*	*tunjile*	*pilolinje*	*nikumbuje*	*kutunjiro*	*ku Mundi!*"
"Where	we went to		masters		to *Mundi!*"

534 Then going to the back of his hut, he enters and takes a piece of bark left there bent up into a dish containing medicine which has been put in by an assistant. This assistant holds in his hand the neck of one of the fowls which was killed at *Lupanda*. The *n'michila* washes his face and chest with medicine to cleanse his eyes and then leans forward to the assistant and bites a piece off the neck of the fowl which the assistant holds out, and eats it. This is *ku-lumiza*, "to taste a small piece," often the liver, before starting to eat the flesh; this is generally done by the most important person. The *n'michila* has been followed by his assistants who do as he has done. They all follow him next round the cooking place for the boys at *Lupanda*, each standing for a moment on the stones which have supported the cooking pots, while the women sit looking on sadly. He begins to dance and the women join in, singing *likwata*. He then calls the parents of the *wali* and leads them to where the bonfire was. There assembled, he tells them they must not bathe, and that tomorrow morning early, porridge is to be sent to the *wali* which must be prepared by a woman who has had connection with her husband and who has not washed her hands; this is supposed to make the boys strong. Early in the morning, the husband, who likewise has not washed his hands, carries the food to the *wali* and personally gives portions to each boy to eat.

881 When they have partaken of the food, the circumcision is performed by the *n'michila*
304 who has returned the same morning early. The *wali* one by one, commencing with the leader, go forward a little to the place where the *n'michila* awaits them. Each *wali* is accompanied by his *nkamwai* who commonly says, "Come along and you shall eat of the honey made by the bumblebee." Such honey is very sweet and called *mawa*. This refers in sarcastic terms to the pain the boy is about to undergo. The boy squats down, leaning back on his *nkamwai* who supports him, while the medicine-man, having warned the lad not to cry out, performs the circumcision with a small knife called *chinwale*. It is a triangu-
[412] lar knife with one cutting edge and a handle produced from the opposite corner. Properly the Yao method is, I believe, only to nick the free margin of the prepuce just to the right of the middle line near the frenum, but complete circumcision is now commonly practised, possibly as the result of Swahili influence. In this case, the prepuce is seized and held by the fingers, and division made by a circular incision without using a clamp or forked stick.
[785] A dressing of charcoal and oil may be applied or medicine is chewed in the mouth and the saliva spat on the wound and the boy sent on to rest under some convenient tree.

882 When all the *wali* have been circumcised, they are gathered together in one place and
● [785] the *n'michila* dividing them into groups, puts on the neck of the leader of each group a necklace made of plaited bark from the *mjunda* tree;[1] these necklaces contain medicine against all evils – witchcraft, attack by lions, etc.

3:Stanzus D-5 (ca. 1912) 1922 FT7 Yao FT7

843 538 when in child-birth there is delay in delivery it is said of the woman "*Akulukwa*," "she is stuck," from *ku-kulukwa* "to be suspended, to be caught by a thorn"; *wujuji*, well dressed, is a slang exclamation meaning "everything, everything is out!" The verse refers, of course, as all obstetricians will recognize, to the moment of crowning of the emerging head during parturition when it appears to be stuck; then suddenly it slips over the perineum and "everything, everything is out."

843 533 The nakanga now gives way to the songs of the other women. In different districts different versions of the songs are sung, but the other women will quickly pick up the refrain of the song sung by a woman who has come in from some distance.

843 After these songs, the nakanga instructs the woman and her husband in the care they must take until after the child is born. Macdonald says, speaking of the instructions "but of the quality, we prefer to be silent."[1] What a pity he allows no one else to judge!

The woman is especially cautioned against sitting with her legs crossed; they must be kept apart lest the child in her womb be suffocated. She is also told many useful things concerning her pregnancy and confinement. The husband is cautioned to cease intercourse with his wife or if he has intercourse, his wife may not lie on her back, lest the child be injured.

While this instruction is going on, all the assembled women cook and eat the feast which has been made for them. When all has been said, the nakanga anoints the man with castor oil, which has in the meantime been warmed, and ties round the neck of the woman the *litiwo*, a cord made of plaited bark-cloth with a tassel in front; at the base of the tassel white beads are strung for good luck, and at the end of the tassel, red beads are affixed, having symbolic reference to the haemorrhage at the time of childbirth. The woman wears only a strip of calico of two hands breadth called *ulala*. She is anointed on the head, body, and limbs.

[751] The tying of the *litiwo* is the sign for dancing to begin. It is a dance in which women try to excel one another. They come with all their tattoo marks on buttocks, thighs, and abdomen renovated; they wear diaper-fashion a narrow strip of cloth, always black in color, and round their bodies numerous strings of beads. With the beginning of the dancing, their other clothes are thrown off and practically naked, they vie with one other in exhibiting their charms and skill in dancing, which afterwards becomes the subject of much discussion among the women onlookers. "So and so is really too old and skinny for such exhibition," and "So and so has buttocks as flat as a wall," while "Such and such a one is fat and beautiful and dances wonderfully, with such shoulders," etc. In front of the woman

[431] is set a wooden plate, in front of the man a mat, and on these are thrown donations by the dancers and onlookers, consisting of beads etc., or nowadays pennies and small silver coins to help to pay the expenses of the entertainment and, in the woman's case, to buy medicine which may be necessary should the baby fall ill. When the wedded couple are

[1] Africana, op. cit., vol. I, p. 139.

3:Stannus D-5 (ca. 1912) 1922 FT7 Yao FT7

757 Simple incision is practised for relief of pain or again "medicine" may be introduced into the wound. Such medicine usually consists of charcoal prepared from various vegetable substances. There is no evidence that any active medicinal principles are involved and the most that is attained is probably a certain amount of counter-irritation. For pain, a string is tied tightly round the part; thus for headache one sees a string tied round the head and doubtless some relief is felt when pressure is made on the temples. A man with an abscess of the hand or foot will tie a string round the arm or leg, but I have never seen it so applied as to produce any effect comparable to that of Bier's hyperaemic treatment. By analogy a string may be worn round the chest for pleuritic pain and by limiting movement may be effective. In many cases a charm is attached to the string as an adjuvant.

The use of drugs as such is widespread but I have very little evidence of their efficacy. The methods of administration are various. The vapor bath is often used. Over a pot of water in which have been dropped herbs and stones heated in a fire, the patient squats enveloped in a blanket and is thereby subjected to the action of the medicated steam. This method is also adopted for enemas. A case which came recently to my notice was the wife of a native hospital dresser who, suffering pain in the abdomen, avoided my ministrations and consulted a female medicine-maker. She was given a vapor bath as above described and after a few moments, the medicine-woman slapped her on the back and told her to rise. The old woman plunged her hands into the pot and brought forth some human hair tied in a piece of calico and a human metacarpal bone. "These are what troubled you," she said — fee £1! This is called *ku-kapisia*, to take evil things out for.

[758] Various powdered barks and leaves are applied to ulcers and appear to have an astringent effect in some cases but the majority seem to go from bad to worse. No other external applications have been observed except one for scabies. Incision of the skin and insertion of "medicine" have been mentioned above.

Large numbers of vegetable products are administered by mouth, always in the form of an infusion or suspension. It is probable that a number of these are really beneficial but I am not able to speak in detail of their effects. Many astringents are undoubtedly used for diarrhoea. Herbs containing oil are used for gonorrhoea.

757 Apart from magic medicine dealt with elsewhere and commonly employed for purposes outside disease, charms are used for the prevention and treatment of ordinary diseases and injuries. There are only a few varieties of charms. A vegetable substance, root or stem, may be worn on a string round the part of the body concerned. Thus one sees a couple of little pieces of stick, *mbiji*, on a string tied round the head, round the arm or round the chest for headache, a whitlow or diarrhoea as the case may be. The medicine may be in the form of a preparation, generally charred vegetable substances, and is made into a little packet in leaves and cloth worn most commonly round the neck; it is called *kalamwa*. Such a charm is supposed to be effective against all ills.

3:Stanner D-5 (ca. 1912) 1922 FT7 Yao FT7

Again, charm medicine may be contained in various articles which are also generally worn round the neck. The teeth and claws of the beasts of prey are so employed, generally arranged in pairs bound together so as to form a crescent and suspended from a string. The teeth of crocodiles, lions, leopards, and the claws of the same beasts and of some large birds of prey are thus employed. The teeth etc., are in themselves charms against injury, probably against what one might call homologous injury. The idea of stuffing them with medicine is probably a secondary consideration, a process of fortification of the charm so that its use comes to have a more powerful influence. It is interesting to see of late years that the native, recognising the decorative value of these crescent-shaped amulets, has begun to copy them in lead and ivory. A series of these of graduated size is worn as a necklace by women. 751 757 825

When a medicine-man is consulted, part payment is made in advance, "payment to go and dig medicine (roots)." The rest of the payment is made when the cure is effected. Should a patient not be satisfied with his treatment and wish to consult some other medicine-man, he pays to the first a quarter of the fee he would have paid if his cure had been effected; this is called "paying him to get his medicine away." Unless this is done, should he recover later, he will be liable to claims for full fees from all of the medicine-men he has consulted; each will say his own medicine has gone on acting and has effected the cure. A medicine-man may take a case he is treating into his own house. 756

In prescribing medicine, very particular instructions are given with an embargo on certain things which may or may not have some use and significance. A medicine-man in 1901 at Malemya's, who inoculated every one in the forehead with bullet proof medicine, said that no one must step across a *mutai* (pestle for pounding grain), and no one must eat the leaves of the sweet potato.

A medicine-man always partakes of part of the decoction he is giving to a patient to show that it is harmless; I think these preparations are mostly inactive. I should hate to sample all the castor oil I have prescribed, though many natives have had suspicions about me when I have not done so.

Poisons. Though there are a large number of species in this country, both vegetable and animal, from which poison might be extracted, those that have gained any reputation among natives and have come under my observation are but few in number. *Mwai* (*Mwabai* Chin.) "the ordeal poison," is the bark of *Erythrophleum guineense*. The natives distinguish two varieties of *mwai*, the two trees differing slightly in leaf, flower and bark; *mwai* in the *Erythrophleum guineense*, the second variety known as *mpanyajile* is doubtless an allied species. *Mwai* is the poison employed in the poison ordeal.[1] It is administered in a poisonous dose as a decoction of the bark, recovery or otherwise depending on whether or not the poison is vomited by vomiting. Natives give as the symptoms headache, giddiness, disturbances of vision, vomiting and purging, with slowing of heart beat. *Alpo-* 137 238 [695]

[1] See index, p. 296.

3:Stannus D-5 (ca. 1912) 1922 FT7 Yao FT7

539

60. *Gonwe lende ndakuti!*
Lying on the rock, heat!

This is a slang expression which in full would read, "It is nice and warm lying on a rock in the sun, but it is not so comfortable as being in bed in company with your wife; you can go on waiting but you won't get anything." This might even be said to a dog, watching as a dog will, every morsel of food lifted to its master's mouth.

61. *Kulupilile mwai pa nkina!*
To have hopes of water for maggots!

It is a custom before lying down to sleep on the floor mat, to take it up and pour boiling water on the earth floor to kill any blood-sucking maggots (Congo flour-maggot, *Anthomyopsis*). If you see a pot cooking on the fire, you naturally think there is food being prepared but you may be disappointed; it may only be the pot for heating the water to kill the maggots. The saying is thus used to a man who has made an assignation and is disappointed but goes on waiting. [513] [751]

62. *Kuluma ngwe!*
To bite cockroach-like!

The cockroach is described by natives as going up to what it will eat, remaining quiet for some moments, and then suddenly taking a bite. This is said of a man who comes up to you smiling and then hits you a hard blow. [625]

Among the Yao as among other tribes that I have previously mentioned,[1] signs of salutation to a superior are made by clapping the hands or patting the breast or buttock with one hand, at the same time crouching down. A woman will go off the path and kneel, looking away from a superior passing along the roadway. 576

A person going by the door of a hut where others are sitting, will say "*Kwalanga bana!* At the door here." Passing behind anyone, he will say "*Ku-ego 'nsa!* At the back!" Meeting anyone on a path, a man will simply say, "*Ishe, bwe,*" adding perhaps, "*Ku-shale!* all is well!" A chief or headman on returning to his village after a journey, is greeted by the women with trilling of the tongue (*Ku-lulula*). [201]

Man and wife do not greet each other in the morning. The wife rises first and draws water and places it in the hut for the husband's use but nothing may be said.

When a visitor is entertained and a chicken cooked for a repast, the "pope's nose" is always for the visitor. The right hand only is used in dipping into the common pot. A man of small importance, though replete, will go on making pretence of eating at a common meal by taking very small amounts so that his superior shall finish first, and rise and go away before him.

I may here add the words used by the Yao for the sounds made by various animals; they are interesting to compare with those of other languages: 192.

[1] "Notes on some tribes of British Central Africa," op. cit., p. [illegible]

7: Hetherwick M-S (ca. 1900) 1902 FT7 Yao FT7

evidence. On the appointed day she dances, *lupina mwandu*, to dance the spirits, or *lisawanda*, to rave or prophesy, and in the ravings of the dance she calls out the name of some party who is afterwards accused of being the *mwavi* or witch. Followed by a crowd of excited spectators she dances through the village spear in hand, stopping here and there to dig up charms or medicines which the supposed witch has buried in the ground as the instruments of his occult practices. It is only in cases of supposed special difficulty, or when the magnitude of the supposed crimes demands that special measures be adopted for their detection, that the services of such a witch detective are called in. In ordinary cases these appeals are made to the divining oracle who consults his "lota" as a means of discovering crimes of this nature.

Among the Yaos the human being is believed to be the sole possessor of a *linda*. I have been unable to discover any trace of a theory that the *linda* may pass into any animal or inanimate object and thus confer upon it the nature or power of a fetish. Such belief is cherished among the Angoni and Achewa tribes to the westward by Nyasa and the upper Shire River, and the intelligent Yao is aware of this, but he states that among his people no such belief exists. Even charms which have the effect of healing or warding off disease, or of protecting the wearer from war or wild beasts or other danger by land or water, are supposed to possess this power without any idea of their being possessed by a *linda* or other spirit influence. The nearest approach to such a theory is in the case of certain powerful "doctors" who have obtained special medicine by means of which, at death, they can transform themselves into lions, leopards, crocodiles, etc. Lepers also are sometimes supposed to become hippopotami. But both of these cases must be regarded rather as transmutations of body than transmigrations of soul.

It will be thus seen that the nature of the human *linda* is closely allied to that of the *mandu*, which are the inspiring spirits in madness and in the century of prophecy or incantation. What the origin of these inspiring *mandu* is, or to whom they belonged when in bodily life, the Yao holds no theory. He is content to accept them as they are, *mandu* (pop. "Just *mandu* and nothing more," as he says.

It is, however, when we follow the disembodied *linda* after death and consider its position and power in the other world that we find ourselves in a region of higher spiritual activities.

In dreams or in fainting fits the *linda* leaves the body but only to return to it with the awakening consciousness. At death, however, it leaves its earthly abode never to return. It is now spoken of as having gone to *malenga* or *mlenga*. This word, which lies at the basis of all Yao theories of the place of the soul after death, will be dealt with later on as regards its derivation and connections in the Bantu family of languages. In its actual use it bears two significations.

1. The word *malenga* is in the first instance applied to the human soul or *linda* after death when it is considered as an inhabitant of the spirit world. Even in life a man, when he meets with any piece of good luck, will be heard to say, "It's my *malenga*," as if his soul had an influence in determining the character of his

10: Sanderson D-5 (ca. 1920)1922 FT7 Yao FT7

A Note on Ceremonial Purification among the WaYao, Nyasaland. 55

By Meredith Sanderson, M.R.C.S., F.R.G.S.

One of the effects of European influence in Africa is the breaking up of tribal organization and discipline. The rights of the individual being no longer subordinated to the common good, customs formerly observed by the village community as a whole die out, while those affecting the individual are still practised.

This tendency is well seen in the ancient ceremonies of purification among the WaYao which are now rarely performed collectively, though the natives, however highly "educated," still goes to the doctor to obtain the necessary medicines for removing, for instance, the contamination caused by contact with a corpse.

These collective ceremonies have already been described by various writers in respect of both Nyasaland and elsewhere;‡ but the Yao tribe have not, I think, been given in detail, and the following notes may not, therefore, be altogether valueless.

The *Pepile* ceremony (*Ceppipile*, "he sweep") is common to most Bantu tribes. In its simplest form it used to be performed annually by the WaYao, at the beginning of the twelfth month, count of the months (lunar) being kept by means of a "calendar."§ The whole village is thoroughly "spring-cleaned," all rubbish

* At Ku, where the game is played on All Souls' night in the mornings, Father Hermelen Nyoni tells me, the song in Kiswahili runs:—

Yaoo, yaoo, quando to voogo,
Yaoo, yaoo, Kay mate
Yaoo, yaoo where you come;
Yaoo, yaoo, I shall not be there any more.

Words repeated, pensively, to the hidden ball.

† See Sanderson, M. C., "The Yao Tribes," pp. [illegible], 1919. *Annual Report, Bureau American Ethnology*, 1919.

‡ Frazer, "Golden Bough," II., 179, 180.

§ A "calendar" consists of a string tied to two pegs in the wall of the house, or between two poles, on which are threaded twelve pieces of reed, bamboo or cornstalk. One of these is moved to the other end of the string each time a new month is seen.

[illegible]

[364] is swept up, the ground round the house is hard clean, and the latrines demolished. Ceremonial beer is brewed by the head wife of the chief, and after this has been drunk the ashes of the fire used in the brewing are carefully collected and taken to a meikhour ("ceremonial," or "divinging of paths") where they are deposited.

[365] The chief, as representative of his people, bathes in special medicated water, a decoction made from the bark of m'bengo and ashes, and the rest of mpingo.

[366] This completes the ordinary annual ceremony, at which new fire is not made.

[367] On certain special occasions a more elaborate ritual is carried out; such occasions are the death of a chief, a threatened epidemic of infectious disease, a murder (especially by shooting) and the frequent occurrence of quarrels in the village.

In such circumstances, in addition to the ordinary purgatio ceremony described above, the porridge sticks of the whole village are removed and all fires extinguished. The discarded sticks and all ashes of the old fires are carried to the meeting of paths, where the former are stuck upright in the ground and the ashes piled together; this is done in procession, all the people taking part. On their return to the village

[372] new fire is made by friction by either the chief or his younger brother—usually the latter; fire procured in any other way would nullify the proceedings. Finally

[373] all the people bathe in the medicated water used only by the chief at the ordinary ceremony.

● 957 976 In addition to this special form of the purgatio ceremony, another rite is sometimes performed after the occurrence of a murder or as prophylactic against the spread of epidemic disease. The doctor first makes a kind of trough (ndengwe) from the bark of m'mbembe or m'mpin, and procures a chokhilo (or chipangali) basket—used as a strainer in sub-making. Having collected his medicines he proceeds to the bank of the stream near the usual bathing-place of the village and digs a shallow hole, in which he places the basket; in this he puts the leaves of a certain thorny shrub and covers the whole with the trough, which is banked up with earth so as to be perfectly firm. He then puts his "medicines" into the trough; these are, first, the head of an iron hammer and a piece of dog, both from a smelting furnace. On top of these he puts pieces of the root of a certain tree which has many and particularly sharp thorns, and bits of bark from two trees peculiar for having very straight stems. Having distributed these evenly along the floor of the trough, he fills it with water and then proceeds to construct an arch over the end of the trough farthest from the stream. Two long poles, cut from a kind of tree particularly rich in sap, are planted in the ground, one on each side of the trough and close to it; these are bent over towards each other, and fastened together by means of a strip of their own bark. A bamboo is now planted alongside each, and similarly tied to the fellow. During all these preparations and throughout the ceremony it is essential that the doctor has no knots in any part of his clothing.

The preparations are now complete, and when all the fires in the village have been extinguished the people go in procession to the spot where the doctor awaits them. All must be purely clad and must have no metal about them.

[368] The chief opens the ceremony. He steps into the trough and taking some of

[369] the medicated water therefrom in his hands he rinses his mouth with it. He then offers a prayer to the spirits of his ancestors, first stating the emergency and

[370] calling the measures which are to be taken to deal with it (new fire, sweeping, discard of porridge sticks and shooting). The prayer over, he splashes the water in the trough over his body and passes through the arch, first throwing some gifts (beads or, in more modern times, money) into the trough. These gifts, presumably

[371] intended as an offering to the spirits, are the perquisite of the doctor, and everybody is supposed to contribute in turn.

10: Sanderson D-5 (ca. 1928)1922 FT7 Yao FT7

The men and boys now pass through the arch in order of seniority; each splashes himself with the water in the trough, but neither speaks nor rinses the mouth. The women come next, led by the head-wife of the chief; the latter rinses her mouth and, instructed by the doctor, repeats a prayer similar to that offered by her husband. The remainder of the women merely splash themselves, like the men, before passing through the arch. All then return to the village, where the *pyejile* is continued. 751 796

Finally the doctor takes the hammer-head from the trough and hands it to the chief, who robs the bolt into it, and, a bar having been placed on the ground, goes through the form of forging the latter by beating it with the hammer. He then scrapes the ground with the bar as if clearing a place overgrown with grass; he does not dig with it as in hoeing up the ground for planting seed. After this rite the chief again bathes in medicated water similar to that in the trough, and the ceremony is complete.

Whereas the *pyejile* ceremony and its adjunct, the rite of the arch, are now but rarely performed, no Yao will omit the rite of purification after a death in his family. This ceremony consists of two essential parts, both protective against the whole, a disease characterised by dropsy and supposed to be contracted by contact with a corpse, or by association, especially by sharing a meal, with those who have been in such contact. The first of these parts is bathing in certain medicines, which protects the bather from whole, and the second consists of a sort of communion meal, shared by all friends and especially relatives with those who have been contaminated, and designed to protect those friends and relatives. [178] 751 764 796 783

The decoction for bathing is made by soaking the roots of *Lagenaria* and *Sandoricum* in water, together with the bark of *mbonwa*, one piece each from the east and west aspects of the tree; the water assumes a reddish tint, and the whole body is bathed. 751 783 824 765

The communion meal consists of porridge made from any kind of flour or of rice, and some spinach leaves. In the latter case scorched and powdered root of *mwandongolile* is mixed, with a little salt. All near relatives of the deceased must partake of this meal, as well as their wives and their near relatives; part is carefully put aside for the use of any relative unable to be present at the ceremony. [263]

Lastly, since the spread of Islam among the WaYao, this rite has become confused with the distribution of food to the poor at the funeral of a Muslim, and the Arabic word *sadaqa* ("charity") is now generally used for it, to the exclusion of its wider, correct meaning. [177] [177]

It may be mentioned here that after the death of a child the father is desired to sow to his wife for a period of about three weeks, and the first act must be one of coitus interruptus. 765 789

MEREDITH SANDERSON.

765 supposed to be the abode of spirits. Except in the case of chiefs, the Wayao never make any sacrifices over their graves, like the *Anyanja* grass shelters, and the present-day Mahenenkhe earth imitations of Swahili tombs.

766 Chiefs, and the more important headmen, are usually buried in their own villages. Over the grave, a grass hut with a veranda is erected; the hut is covered with calico, and guns were formerly set in an veranda posts. Guns and ivory used to be buried with the corpse [767] but these Yao, I am told, never practised the barbarous custom of burying slaves with their chiefs. Information of the death of a chief was always conveyed to other chiefs by slaves who were kept by the recipient of the message.

Since the time of the old Mahenyo, the corpse of a chief always lies with its head in the direction of the old chief's grave. The grave is swept around, and the house pulled down as in the case of an ordinary man, but the grave-hut is rebuilt every year and never forgotten.

Since the burial of the dead is more or less correlated with the idea of planting seed from which progeny will spring, the natives will not bury a leper, believing that if they did so, leprosy would spring up all around them. Persons dying of an epidemic disease such as small-pox are dealt with in the same way. In these cases and in that of a man dying of ordeal poison, the body is enclosed in a mat and put up in a tree, a manner of disposing of the dead common among the *Angoni* and some *Anyanja*. Concerning death from dropsy, similar precautions are taken to those in the instance of a woman dying in childbirth,[1] and a tube is put down to the body from the surface of the ground.

A leper feeling that the end is near, will ask to be put in a hut built outside the limits of the burial ground. Here, provided with water and food for a few days, he will wait to die near the graveyard wherein he knows he cannot be buried.

Anyone who is wounded with a spear or any other weapon is not taken into the village, [768] but is kept in a hut in the bush. If death results, the mourning ceremonies differ somewhat from the ordinary rites and are much curtailed.

Initiation Ceremonies. Under this heading I propose to deal with the three ceremonies, *Lapondo*, *Chipale* and *Liliwo*. They are ceremonies of great importance in the life of the native and their educative effect for the good of the tribe is far reaching.

At *Lapondo* (*Nkapala*) the young boys attend; at *Chipale* the young girls go through their initiation and a side ceremony for young married men takes place, while *Liliwo* celebrates the first quickening with child. All the ceremonies are included in the word *Unyago*. Macdonald in *Africana* while referring to "the mysteries"[2] gives scant information about the ceremonies and has, presumably, without much knowledge of what goes on, condemned these customs like many others as furthering "absurd superstitions." He has failed to recognize that they are ceremonies when a large amount of useful advice is imparted, good manners are inculcated, and tribal matters in vogue known. Sexual questions are dealt with in these mysteries, and, though mixed up with a large amount of superstition, a

[1] See supra, p. 306. [2] Op. cit., vol. 2, ch. 2.

[55] to turn. After drinking, they sit down while the n'nimbin gives instructions that have they sleep tonight. He takes his basket and starts to run back to *Lepondo*, singing:

[53] [53]

"Ee	begin	pabinge	ndumbuje	Ndumpire	Ee Wundi"
"Where	we want to		mentors		to Wundi?"

Then going to the back of his hut, he enters and takes a piece of bark left there heat up into a dish containing medicine which has been put in by an assistant. This assistant holds in his hand the neck of one of the fowls which was killed at *Lepondo*. The n'nimbin washes his face and chest with medicine to cleanse his eyes and then bends forward to the assistant and bites a piece off the neck of the fowl which the assistant holds out, and eats it. This is *bo-bamire*, "to taste a small piece," after the fowl, before starting to eat the flesh; this is generally done by the most important person. The n'nimbin has been followed by his assistants who do as he has done. They all follow him next round the cooking place for the boys at *Lepondo*, each standing for a moment on the stones which have supported the cooking pots, while the women sit looking on sadly. He begins to dance and the women join in, singing *Mwanda*. He then calls the parents of the soil and leads them to where the leader was. There assembled, he tells them they must not bathe, and that tomorrow morning early, porridge is to be sent to the soil which must be prepared by a woman who has had connection with her husband and who has not washed her hands; this is supposed to make the boys strong. Early in the morning, the husband, who likewise has not washed his hands, carries the food to the soil and personally gives portions to each boy to eat.

[54] When they have partaken of the food, the circumcision is performed by the n'nimbin who has returned the same morning early. The soil one by one, commencing with the leader, go forward a little to the place where the n'nimbin awaits them. Each would be accompanied by his sponsor who commonly says, "Come along and you shall eat of the honey made by the bumblebee." Such honey is very sweet and called *mamu*. This refers in metaphor terms to the pain the boy is about to undergo. The boy squats down, leaning back on his sponsor who supports him, while the medicine-man, having shaved the hair out to my cut, performs the circumcision with a small knife called *ntumbi*. It is a triangular knife with one cutting edge and a handle produced from the opposite corner. Properly the Yao method is, I believe, only to nick the free margin of the prepuce just to the right of the middle line near the frenum, but complete circumcision is now commonly practised, possibly as the result of Swahili influence. In this case, the prepuce is seized and held by the fingers, and division made by a circular incision without using a sheep or forked stick. A dressing of charcoal and oil may be applied or medicine is chewed in the mouth and the saliva spat on the wound and the boy sent on to rest under more convenient trees.

[55] When all the soil have been circumcised, they are gathered together in one place and the n'nimbin dividing them into groups, puts on the neck of the leader of each group a medicine made of plaited bark from the *mpindo* tree.[1] These medicines contain medicine

[56] [56]

[1] [illegible]

Other hypothetical diseases which are caused by disbelieves to women are mentioned under various other headings. *Kanipo*: a disease generally characterized by alienation of the legs but in some cases by pains in the back, or heavily used for a variety of symptoms, is said to be caused by the entry into the body of a worm which lives in water-pools. This worm which I have had identified is a gordian worm and not known to be parasitic in man. *Lamei*: When a man kills another in battle, he will sit upon the belly of his victim; otherwise he believes he will shiver, with heat and his own belly will swell up like that of the corpse when putrefaction sets in. He is supposed also to hunger after more killing and blood. *Lilongo* is the name of a supposed disease which kills off one child after another in a family when they are about six months old. Congenital syphilis naturally suggests itself but I have never been able to verify this idea. *Lilongo lya bainin*: a supposed disease which causes the death of the first child when the second is born, the second when the third is born and so on, whatever the intervals between the births. Each child is said to push (*lu-tsin*) the previous one out of this world. Under these circumstances the disease is ascribed to something wrong with the mother or father and they are examined by a medicine-woman or medicine-man, and any menstrular or an external pile found will be cut away.

If a snake bifurcates two times, the case will prove fatal. If a crocodile emits a growling sound when seizing its victim, though he escapes he will certainly die.

Treatment of diseases. Of surgical treatment there is very little to be noted. Nothing in the way of operation is performed with the exception of circumcision (see Legends).

An abscess is allowed to burst, the smallest tumor is left untouched, but necessary digits which are not sore, attached only by a few pedicle, are snipped off.

The native cannot extract teeth. They are incapable of rendering any assistance in cases of difficult labor. Dislocations are not recognized as such, but fractures are treated by the application of wooden sticks placed at intervals round the circumference of the limb parallel to it and held in position by twisted pieces of bark string (Pl. XXIII, fig. 3). The principle of the tourniquet appears to be unknown.

The only instruments used consist of a small knife for incision, a cupping-horn, and a primitive form of funnel for administering enemata (Pl. XXIII, figs. 1, 2, 4). The knife has a triangular blade with a stone which is commonly twisted at one of the corners. The knife is used for wet-cupping, tattooing, and circumcision (Pl. XXIII, fig. 3). The cupping-horn is a small horn of a calf. The spike is pierced and after application to the part, suction is made with the mouth and then the hole sealed by rocking a piece of beeswax over it with the tongue. Six small incisions are made in the skin for the withdrawal of the blood. The cupping-horn is called *ebeni* (Johnston, Chin.). Cupping is used for headache and for pain in the chest and back. The enema funnel, *ekpelpe* (Johnston, Chin.) is made from the neck of a gourd to which is attached a hollow straw for introduction into the anus. Half a pint of an infusion of cowpeas is injected for constipation associated with pain.

[End Plate 22]

2: Mitchell E-5 (1946-1949) 1956 FT7 Yao FT7

who are sexually inactive from contracting *ndaka*.[1] At the same time the headman gives each household a piece of the fire which has been newly kindled in the traditional way by rubbing two sticks together.

The mystical danger inherent in the act of setting up a new village is well brought out in the propitiatory prayer and the abstinence from sexual intercourse. Once again it is the village headman who must make the offering to his ancestors; and it is the village headman who has intercourse with his wife so that the effluvium from his sexual activity may permeate the medicine in the hut and so protect the villagers from *ndaka*. Lastly, it is very important that the whole village cooks and is warmed by one fire. 'We are of one fire' expresses the common origin of two villages; though in fact every time a new village is founded a new fire should be kindled. To bring fire from the village of origin is to bring sorcery, since the Yao believe that sorcery can operate between persons closely linked by kinship only. To have one's own fire is to be autonomous from other groups.

The Burdens and Rewards of Headmanship

MacDonald had the perspicuity to see not only that the village headman was the representative of a corporate group and that he represented this group to outsiders, but also that he represented external authority to his villagers. The village headman who in his person stood for the unity of the group, performed certain ritual acts which emphasized this, such as praying to the village ancestors. In spite of the decline of the ritual his position is still regarded as exceptional. Much, however, depends on the rank of the village headman. There may not be much difference in ritual observances and mystical dangers between a headman who has in his charge a meagre three or four huts, and a commoner. In the larger and more important

[1] This is one of the most important mystical concepts of the Yao. I have described this condition and its implications more fully in *Marriage among the Machinga Yao of Southern Nyasaland* (R.-L.I. Paper), forthcoming. Briefly it is a disease characterized by edema which affects those who are sexually inactive when they are suddenly brought into contact with a person, or an object which he has touched, after having intercourse. The people most affected are the young and the old, i.e. those who cannot have sexual intercourse. Those who are capable of intercourse are expected to have sexual intercourse with a stranger, and so fortify themselves against this dread disease.

2: Mitchell E-5 (1946-1949) 1956 FT7 Yao FT7

strike out with his adherents to found a new village. A sum of £6 or £7 is a considerable amount in everyday Yao life where the annual cash income of the average individual is not much more. The leader of a dissident group is prepared to forgo this wealth to get one foot on to the lowest rung of the political ladder—that is by becoming a village headman.

Obversely there is a great deal of sentiment attached to the idea of a united village. To the Yao way of thinking a village is broken by fighting or death, and these evils are linked by witchcraft beliefs. The association of death and the break-up of the village is brought out clearly by the funeral ablutions of villagers after the burial of one of their number. An important ingredient in the medicine with which the mourners wash themselves after the funeral, is *ciwele*. It is the earth from a particular type of terminary which is usually about 12 to 18 inches high, upright and almost cylindrical. The crust is very brittle and it is comparatively easy to chip off a piece. When this is done a mass of internal chambers and passages is revealed. The soldier ants, unlike those of other species that retreat into the darkness of their passages as soon as they are exposed, come into the open daylight and swarm in confusion over the fractured terminary. When I questioned my informant about *ciwele*, he kicked the crust off the top of one of the hills and said, 'See all the houses in the village of the ants? I have broken their village. So it is with death. It breaks the village.'

The Yao believe that death 'breaks the village' and that conflicts through sorcery lead to death. Therefore, conflicts are the real cause of village splits. Hence differences must be settled immediately if the village is to persist, because if they last too long one of the aggrieved parties is sure to start using sorcery against its opponents. Those who do move away, go to a distant place because they believe that sorcery operates only where there is social interaction. But the fear of sorcery on the other hand is just as strong a force in maintaining the physical unity of the village. It is while the migration is being planned that sorcery is most likely to be used. This is particularly so if the village break is taking the form of a lineage split. This happened, for example, in Lupanje village.

Kalambo, the sister's son of Lupanje, wanted to leave the village and had gone to seek a suitable site. When he returned he found that

2: Mitchell E-5 (1946-1949) 1956 FT7 Yao FT7

621 his mother was ill and had gone with Lopunje's younger brother to
626 the diviner to find out the cause of the illness. The diviner indicated
753 that Lopunje thought that Kalombo was not showing him the proper
respect. Lopunje knew that his sisters had lost their value in the lineage since they had stopped bearing children, whereas Kalombo's sisters were still reproducing. His malice had caused the woman's illness. When Kalombo got home he asked his mother's brother to blow water out of his mouth [1] and help him to prepare some medicine for the sick woman. This Lopunje did and the woman recovered immediately.

Shortly afterwards Kalombo remonstrated with his mother's brother for causing the illness of his sister, but Lopunje said that he had no control over it: the spirits had brought it on her. Kalombo knew that he could do nothing and abandoned the idea of building his own village. He knew that there was bound to be more illness if he carried on with his plan.

182 Clearly the belief in the mystical powers of the ancestors or of
621 sorcery is a force which prevents sections from breaking away
626 from the village. A break follows only when opposition within the village has reached sufficient pitch to force one of the sections to take the risk of illness, rather than to continue living in the village. Sometimes the dissident group comes back because further deaths at their new village are convince them that their action was wrong.[2]

Effects of the Headman's Personality

632 Whether a village maintains its unity or not, depends very largely on the personality of the headman. This is why the officiating headmen and others at the installation ceremonies are so insistent that cases should be settled quickly. The main duty of a headman is to maintain harmonious relationships within his village and to see to the welfare of its members. All severe
[717] illnesses are immediately reported to him, and so are the results of all divinations. He usually sends his representative to divina-
[769] tions concerning kinsmen not related to him matrilineally. He is immediately notified of all deaths and he organizes the funeral
622 rites. Squabbles are brought to him for arbitration and even
692 where squabbles are settled by kinsmen in the village, usually the headman is formally told of them. Frequently marriage diffi-

[1] An act which occurs twice. See Chap. VI, p. 130.
[2] See the case history in Chap. VI, p. 133.

'sisters' and 'mothers' because alternate generations are merged in kinship terminology and in behaviour. A man's sister's daughter, for example, is called 'mother', and her daughter (his granddaughter) in turn becomes 'sister'. A woman calls her male matrilineal descendants 'children' (*mwanangu*), or 'grandchildren' (*yikulu*); her matrilineal male progenitors 'mother's brother' (*akwelume*), or 'brother' (*akombwangu*).[1] By extension, therefore, another way of expressing common matrilineal descent is to say that two people are the children of one person, *amakhalume*, even though that person may be their great-grandmother. A term which is almost synonymous with this is *mutiwabo cimo*, 'in one womb', used as 'we were conceived in one womb', though once again the reference may be to a common grandmother. But the inclusiveness of these terms varies in different contexts. Any may refer to the matrilineage of maximal span within the village, or to a section of the matrilineage seen as a segmented organization of parts. It is only by reference to the particular occasions that the range of the term may be determined.

The Unity of the Matrilineage

613 A person identifies himself most closely with the members of his matrilineage from whom he expects most help and whom he, in turn, is expected to help. If he is called upon to pay a heavy fine it will be the members of his own matrilineage who will club together to find sufficient money. They, more than others, [755] support him in his quarrels. They come to his aid when he is ill or injured, by consulting the diviner and trying to find the sorcerer who is causing his illness, and by finding medicines which will bring him back to good health. They send him money if he has left the country and needs it to return. The goods he brings home from the labour centres will be shared mostly [754] among his matrilineal relatives. They will find the food to be used at his funeral and also see that his burial is properly carried [756] out. He owes these duties in turn to them. His property will stay almost entirely within the matrilineage after his death.

613 Relationship, unless qualified, is looked upon as being entirely 763 matrilineal. This is well illustrated by the beliefs about the

[1] The more commonly addresses these as *ninamai*. See p. 140.

2: Mitchell E-5 (1946-1949) 1956 FT7 Yao FT7

disease ndaba.[1] This disease, as we have seen, affects the sexually inactive when they are brought into contact with those who are sexually active. But the disease will only affect the members of the matrilineage of the errant person. For example, suppose a labour migrant is coming home from Southern Rhodesia and has, among other things, a few pounds of salt in his baggage for a gift to his relatives. Suppose also that while he is returning he has promiscuous intercourse. The salt becomes charged with sexual heat and if he gives it to any of his matrilineal relatives to cook with, they will contract this disease. He must therefore give the salt to members of another matrilineage, even if they live in the same village. 613 753

It is when the unity of the matrilineage is threatened, by either death or division, that its mystical value appears most clearly. When a member of the matrilineage dies the whole matrilineage is thrown into mourning and remains continent for three days. On the fourth day they perform a ritual purification and some members resume sexual relations, but the closest matrilineal relatives, such as the mother and uterine siblings, remain continent for the remainder of the mourning period, which is about 36 days. 613 765 834

It is tension within the lineage which is most closely attended by dire results. The most important reflex of this tension is accusations of sorcery. Good relationships among members of a matrilineage are adjusted, mainly because friction opens the way to sorcerers. The Yao believe that sorcerers kill their matrilineal relatives so that they may share the flesh with other sorcerers. The sorcerer is fundamentally a wicked person and may kill any relative but is more likely to kill those whom he hates. Hence it is most important that relationships are kept amicable within a matrilineage for fear that sorcery ensues. 613 626 754

An interesting variation of the dangers of sorcery is the belief that sorcerers take the opportunity of squabbles within a matrilineage to kill one of the members. The rationale behind this is that the diviner's instruments are unable to detect the origin of the sorcery beyond the immediate cause. A diviner will indicate that the cause of death of, say, a child is sorcery, but that the witch is observed behind the quarrelling words of some relative. Consequently, danger to a matrilineage ensues when one of its 613 754 578 626

[1] See Chap. V, p. 112.

The evening of the first day is called Ipwon Ipo mokwanni, or "the day of singing," as singing is kept up far into the night, but the exact significance of the word Ikwanni I have been unable to find out.

The second day is spoken of as Ipwon Ipo mowuno, "the day of washing of hands," (Iwuno, "to wash the hands") when the youth are quickly instructed as to the necessities of washing hands before preparing food, etc.; precept is followed by practice. The night is spent quietly; for this day's proceedings few people probably will have remained.

On the third day, however, they come back again from their villages in crowds to witness the performance of wuno, Ipwon Ipo wuno, "the day of house moving" (Iwuno, "to change one's abode, carrying goods and chattels with one"). A representation is given of an onslaught on a village by enemies and all pretend to run away carrying their worldly goods with them. The part of the attackers is played by a number of women who, armed with guns and having donned hats and powder horns, rush in on the crowd from the bush and make prisoners of all they can catch. The men are put in miniature slave-sticks; women who are seen trying to run off with a child on the back, one round the neck and one on each hip, are driven as prisoners into a group. When all the noise and fun are over, the prisoners are released. This is often followed by a mock trial. Two women dressed up to impersonate chiefs of rival tribes, argue an old, imaginary quarrel, usually pretending that there has been a raid by one party on an ivory caravan going to the coast, with stealing of the ivory, while the other party in revenge has caught and killed some of the people belonging to the first mentioned. The thing may be kept up for an hour with much talking and great wit, all those taking part being women. Finally each party agrees to give compensation for the damage done; each presents the other with bundles of sugar cane, and friendship is reestablished. That night, everyone again rests quietly.

The fourth day is known as Ipwon Ipo Iwapwapa (Iwapwapa, "to go round about," referring to the dancing which goes on). Dancing takes place during the day and also the ceremony of *Lokwi* to be referred to later. One of the favorite songs sung this day runs as follows:

> "*Ikkwuki'ji ukwuki'pripa ocinde mowu ukwapri'pa, ocuri' ocokwapa upwjimwi*"
> "(Tuck this) a present don't give me free wuk for me little girl, dear curi' and we'll have some fun together!"

On the fifth day, return is made to the villages. The girl curi' attended constantly by their elderly dear live together for the period of instruction in huts in a special enclosure in the chief's village or in similar enclosures in a number of villages. The curi' may go out into the village but must go about with bowed head and look no man in the face; they wear bark-cloth called *Ikwiko* and should they meet anyone, they must pull over their faces the kind of hood with which their garments are provided. They may not share food with outsiders. If they did so, the latter would sicken with a disease called *ekwuinde*.

3:Stanton D-5 (on. 1912) 1922 FT7 Tao FT7

and under as well. I am inclined to believe that the words primarily refer to a person's maternal and paternal relatives whose children bear the relationship of uncle to the person. A strange point, however, crops up, namely, that the paternal aunts are called *atati* (*ataye*) and their husbands *atati* again.

An elder brother is *ahulu*, his younger brother *mpondwe*, a sister *ahulu*, *ahulu* *wamadi* and *ahulu mdulungwe*, younger and elder sister.

Disease. Apart from old age, the native recognises in all illness and death the hand of an enemy or the result of transgression of some custom: some one has made medicine against him, or he or some one else has broken a custom founded on superstition which is visited on his head. These ideas are so deeply rooted in the native mind that it is with difficulty any appropriate treatment will be received. They rely, rather, on some medicine-man to cure them by medicine more powerful than that made against them. Even an ordinary accident or an attack of pneumonia is accounted for in this way.

The terms given in speaking of sicknesses are, of course, applied rather to symptoms, but in some cases where the symptom cannot be pathognomic of a disease, the word practically stands for the disease. The word used may imply the supposed cause or refer to a resemblance to some object, or again simply state the part affected; thus *ahiwale* (the belly) running stomach ache, *mwa* (eyes), conjunctivitis, etc.

The following words most of which are found in the Reverend Dr. Hetherwick's *Yao Language*, give some idea of the Yao native's conception of disease. The cause which the above authority gives is not always quite the same as I would venture to give. I shall not enter into the question of the diseases as such but only in so far as they bear on customs, etc.

The word *ahiwale* signifies any disease or illness; *ahiyao* and *ahiyakuyinda* refer to epidemic diseases, the former refers to a disease of lowls and dogs characterised by vomiting and hence is commonly used for bronchitis in man. *Chiyinkuyinda* refers to a series of deaths from a cause unknown to the natives. The word *ahuta*, which Hetherwick gives as meaning a plague, rather means arrow poison, I think.

Chendale: a liver disease of fowls.

Chiyao: a congenital deformity of any kind (*Iayapwa* = to be born with).

Chimwiwa: a patch of white hair on the scalp of congenital origin.

Chiziwani (*a wanda*): the word used for a little-mark or freckle; *ladwi* freckle is also included. Children sometimes mark either to see how many "*ziwani*" each has; anyone with none is made fun of.

Chinkondwanali (*kondwanda* = a big lump): a bronchocele.

Chinulula (*Iu-nulula* = to split): a "splitting" headache, or more commonly, medicine by means of which the pretender can inflict pain or death.

Chinyl'ahwyl'ahu: a localised pain in the head.

Chiyayayayaya: giddiness.

3: Swanson D-5 (on. 1912) 1932 F77 Too F77

B/F
753
192.

Chibali: deaf and dumb (*Chibi*); the word is used in slang to mean impotence.
Chimbuto: an old word meaning high force.
Chimukulumbe: "*mulungwe wamile chimukulumbe*," the woman died in confinement without giving birth (*mwpamwi*). The cause of dumbness and constipation are unknown.
Kulubilwa: constipation.
Mulumbangali: mile; *Mwapupa*, swellings in the bowels, hydrocyprid.
Mwenkulili: " plus and swollen."
Chibwa: sore and swollen gums, pyorrhoea; has been translated scurvy.
Chipupuchululu: hardened skin, like a sore on the hand.
Kjambo: without eye-balls, as result of disease.
Kimulapwi, Lumpumbilu: indistinctness of vision (Stefanovich).
Lusoo: watering of the nose; nasal catarrh.
Mumbulu: the secretion at the corners of the eyes in the morning, also the purulent secretion of conjunctivitis (Stefanovich translates " watering of the eyes ").
Nawilu: nasal mucus.
Chimbwalapulu: mucus from the nasal passages (Stefanovich translates merely " nasal mucus ").
Lukumulu: cough.
Chimupunga: after-pains of labor.
Kpuchwi: hiccough.
Ki'mwing'iwu: nystagmus, from a verb meaning "to look from side to side aimlessly."
Jumpu: any skin eruption supposed to be due to eating various substances, chiefly meat.
Ku-kimulu: to have a rash on the body of the nature of urticaria.
Kpukulu: the name of a condition in which the place where a man passes water becomes whitened; hence it refers to syphilis, leucoria, etc.
Chikwakwa (*kwakwa* = a mat): the white on the ground resembling a mat mark left by a man with *Kpukulu*.
Kibwi or *Kiti*: smallpox.
Kikupulu or *Kandulu*: chicken pox; this term may also include other diseases with similar rash, i.e. modified smallpox and pemphigus.
Chimulu (*mlulu* = an elephant): elephantiasis.
Malawa: leprosy.
Mapumpumu: yaws (*chimulu*, given by Stefanovich as "redness alone," is a Chinyanja word for yaws).
Chindulu: (Swahili) syphilis.
Chamwa: (Swahili) gonorrhoea.
Lukuchilulu: whooping-cough.
Chilulu: measles.

3-Disease D-5 (on. 1912) 1922 FTT Tao FTT

164
753
192

Whoma: asthma.
Chichida (*ba-whida* = to scrape out): diarrhoea, dysentery.
Chipunga (*ubunga* = vomiting): swelling at angles of jaws, mumps.
Lomdilim: nasal or bronchial catarrh.
Mwoda: insanity; *mongomongo*, delirium of fever (Fijiharwich translates as periodic madness).
Whida: asthma.
Lokimoto: gutter (*lokida*: pressure school).
Nakumula: bruisedness of hands and feet.
Chimongomo: a pustule.
Chimulubum: a boil.
Chilunga (*ngunga* = the spotted guinea-fowl): ring-worm of face.
Lomoto: any mark on the skin, e.g. birthmark, pigmented spot, ringworm, scar.
Bumoto: a wart.
Nikoali: a burn of the skin.
Lipulowa: a bubbled scar (Fijiharwich gives "bull").
Lumpu: a rash after shaving.
Lilubu: a blister.
Chipulowa: a wheal after a blow or an insect bite.
Chiqu: redness of a limb.
Chipupu: whitlow.
Lipulu: an abscess, sores, pus.
Lilubupu: an abscess; (*ba-wubu*: to swell).
Lumupu: a sore or ulcer.
Mlumupumpu: a chronic ulcer.
Lulubilin (*ba-upulu* = to come to life again): an ulcer which heals and then breaks out again.
Lituhubiqu: secondary enlarged glands in groin or shoulders from a sore on the foot, etc.
Nikoi: Any freely movable lump under the skin, e.g. sebaceous cyst, pustule, ganglion, etc.
Chikoni (*ba-koni* = to bite): rheumatism.
Ulpuru: itch, scabies.
Pimula sulumuru: thrush.
Lumupu: diarrhoea in infants with green stools.
Lulumu: passage of blood in urine; Urinary Bilharziasis.
Ryfulu: ulcer or leucorrhoea of women.
Chiqu'mqu'u: rabies in dogs.
Lumbiini: round-worms of man.

HF
753
W2

Mangangulani: round worm of dogs or found in the ground.
Wakangan mahuwe: a barren woman (lit. dry).
Chimpanda: *sterility* in the male.
Chipangalo or pajo: an impotent man or *Wanda jua ipapo*: a useless man!
Ayuli: impotent.
Mikiwa (*ku-ikwa* = to cut off): a "cut man"; a man over *ifan* he has been castrated.
Mlungu: a month after he has become fat.
Fwimudzu (indicated Chin.): the word is derived from *kimdu*, to mistrusts. Natives say that when disturbed, the insect of this name which is a beautiful, *Hapalopsis durandi*, makes water which falling on the skin of the passer-by causes ulceration. I have seen a variety of cases of ulcerative ulceration due to syphilis, etc., assigned to the effects of this insect; I have, however, shown that it does secrete a corrosive fluid from pores at the sides of the body which dropped on to the skin will dissolve the superficial layers of the epidermis and should such ulceration become infected, ulceration may, of course, result.
Ulendo: tremor, similar to the movements of one of the ways.
Mwajuju: tremor of old age, paralysis agitans.

HF
753
W2
753
G6

The preceding short list of words will give some idea of the richness of the language in some directions and also its limitations. There now follows an account of diseases which are based on superstition, generally connected with the idea of uncleanness or the transgression of some rule of life. Whatever the symptoms, if there has been a transgression, the disease is labelled with the name of the disease supposed to follow the act. Similar diseases are to be remarked among the other tribes in the country; some of them relating to the Anyanja I have already mentioned,[1] and the following may be read as an amplification of the remarks previously made.

Chinyere (*Kanyere* Chin.) from *kanya*, to delouse: At the birth of a child, if the contents of the bowel (meconium) are passed before the body is born (as often happens in breech presentations), the child is said to be "born with disease." One of the women attending the confinement will always go out and inform the husband of what has happened, saying, "*Ayuli 'ikwawa*," (it is born well) or "*Ayuli wi chikuli*," (it is born with disease). This only refers to the passage of meconium and not to any antenatal disease.

When this significant event has happened, the husband may not occupy the house sleeping mat as his wife and have intercourse with her until the child if its own accord crawls from the mother's sleeping mat to that of her husband on the other side of the hut; *Kwapinga mwanake ku mapwa* (*Kwapinga mwana ku mpwa*, Chin.) = "to go the child to the mat." Should the husband disregard this custom, he will sicken with *Chinyere*. The symptoms commonly ascribed to *Chinyere* are pain in the loins and in the hypogastrium.

[1] "Notes on some tribes of British Central Africa," op. cit.

3:Stanzas D-5 (ca. 1912) 1922 FT7 Tao FT7

This has led to the word being translated as Bright's disease (Hetherwick). No symptoms referable to the pedicels are included under this disease. *Mwere* (Chin. *Kapende*): hydrocele; said to be another sequela. A woman called by the movement of her infant after birth is not considered unclean and intercourse will have no ill result to the husband. Sometimes in the event of *Ayali ni chilende*, recourse is had to the practice of intercourse between the woman and some other man. She is then rendered "clean" and the man who is not her husband will not sicken. Such a man is called *Lisoso* (see Widowhood).

Lesoso: a disease similar to *Chinyere*, which inflicts a man having coitus with his wife who has not been cleansed after abortion.

Kwimenda: a practice indulged in if a new-born child falls ill; the word refers to the "hardening" of pots when they are being made and the same idea is applied to the child. If the new-born child gets fever, the illness is ascribed to the unwonted regulations about the vulva of the mother. These are cut off by an old medicine-woman and the blood allowed to drop into a mortar; water and some herbs are added and pounded together, and the mother attired only in a cloth reaching to the loins, washes her breasts with the liquid while the baby is supported on one thigh; the child is then given the breast and the mother, turning her back on the mortar, pushes it over backwards with her buttocks.

Ye ujale (from *uali*; Chin., *dar mahen*): If a woman who, after the death of a child, has not been cleansed by medicine, adds salt to her husband's food, he eating it will sicken.

Yemwe (a Chinyanja word): If a man or a woman commits adultery and any member of the family falls ill, the native say the illness is due to the unlawful act; the sinner is said "to have gone in front of the other"; *kwayende* (*ungwendowa*, Chin.), "he has gone in front of," from *kwyenda* and *kwgendowa*, to go in front of, or *kwenyeka* (Chin.), to go slyly in front of. Hence the word *kwemwe* which also is used loosely for dar mahen. If a child who according to custom has gone to stay with the grandmother, returns to the parents' house and the parents continue to have sexual intercourse, the child may sicken; it is said that the house is "hot" for the child and his disease may be called *kwemwe*. Or if a child which has been weaned is again given the breast after the mother has resumed cohabitation with her husband, it may sicken with *kwemwe*. And the husband is called *kwayende*.

A child which is suckled after menstruation is established, is not affected by any untoward symptoms.

In the event of a woman dying in childbirth, if it so happens the husband has committed adultery, he is held responsible for the death and her relatives claim very heavy compensation.

Ku-wemwiten, to be met with (*ku-kwemwiten*, Chin.): If the act of coitus causes the onset of menstruation and the husband cannot draw back in time to prevent himself being contaminated, he will sicken, and he is said "to have met with (it)" when referring to his illness. In this disease, the penis is said to withdraw into the bladder. Sent from the end

3: Swanson D-8 (on. 1912) 1932 FTT Tao FTT

161
H2
753
G8

of the lot, *shanjiide*, and the red part of the flower of the banana, dedicine on account of its shape, are used as medicine for this disease.

Kwindangana or *Ndoko*: If a man dies and his relatives eat of the food-stuffs left by him, such as corn from his grain-store, before they have been cleansed by medicine, they will sicken with *ndoko*, the symptoms being stomach-ache and vomiting. The word *kwindo ndoko* is also used for sickness due to partaking of food cooked by an unfaithful wife.

Chipate is a word used by both Yao and Anyanja to denote a disease which a man contracts from adulterous intercourse. Scott[1] derives the word from *ku-pata*, to stick to; the woman is so influenced by medicine made by her husband that should any man have adulterous intercourse with her, the disease will "stick" to him, while it will not affect the woman herself nor her own husband. Both the disease and the medicine made to cause the disease are known as *Chipate*. Secondarily, the word has come to be used for any disease which may be gained by sexual intercourse and is sometimes used as a general term for venereal disease.

Chipate cha chipale (*chipale*, a knife): A man who is going away from home obtains medicine and dedicates his knife with it. As he leaves his house to go on his journey, he pretends just to remember his knife and calls for it. His wife brings it to him and it is put into its sheath; he then goes out and sticks it in the grass of the roof of the house. The medicine is made from the tail of a dog, an animal in which coitus is prolonged and the two animals cannot separate. Should the wife commit adultery, it is supposed that just as the knife was undomiciled and dedicated with dog medicine, so the adulterous pair will remain fixed in coitus and be found out. This may be called *chipate cha kutego* (*kutega* = to set a trap).

The Anyanja make medicine with the same idea, *chipate cha kudawa* (*ku-dawa*, to set a trap, Chin.); medicine is put round the house and any man crossing the medicine and committing adultery with the wife will be trapped. In all cases, the man will become ill.

Chipate cha mimi, *mimi*, blood (*mwazi*, Chin.): disease caused by intercourse with a menstruating woman. Blood is passed in the urine.

Chipate cha mwa, *mwa*, pus (*mafuqa*, Chin.): practically venereal gonorrhoea.

Chipate cha kusuji, *kusuji*, cotton (*usuja*, Chin.): the discharge from the urethra resembles a thread of cotton; it is supposed that this thread can be pulled out endlessly.

Chipate cha ndanka, *ndanka*, the white-ants (*chiwa*, Chin.): so called when a man passes whitish pulsive debris in the urine. It is supposed that when he has finished passing water, white ants rush up the penis and enter the bladder, thus causing the pain which characterises this affection. The origin of the idea lies in the fact that if one sprinkles water or urine on the ground near white-ant burrows, the ants will come to the surface of the ground in numbers and make a rustling sound.

[1] D. C. Scott, A syllabic dictionary of the Mang'anja language, p. 48.

Other hypothetical diseases which are feared by theholdiness to women are mentioned under various other headings. *Kwaiye*: a disease generally characterized by elevation of the legs but in some cases by pains in the back, or loosely used for a variety of symptoms. It is said to be caused by the entry into the body of a worm which lives in water-pools. This worm which I have had identified is a gordian worm and not known to be parasitic in man. *Lemei*: When a man kills another in battle, he will slit open the belly of his victim; otherwise he believes he will shiver with fear and his own belly will swell up like that of the corpse when putrefaction sets in. He is supposed also to hunger after warm killing and blood. *Lihenge* is the name of a supposed disease which kills off one child after another in a family when they are about six months old. Congenital syphilis naturally suggests itself but I have never been able to verify this idea. *Lihenge lya hoinin*: a supposed disease which causes the death of the first child when the second is born, the second when the third is born and so on, whatever the intervals between the births. Each child is said to push (ko-tsin) the previous one out of this world. Under these circumstances the disease is ascribed to something wrong with the mother or father and they are examined by a medicine-woman or medicine-man, and any carunculus or an external pile found will be cut away.

If a snake bifurcate two bites, the man will prove fatal. If a crocodile swim a grunting sound when seizing his victim, though he escape he will certainly die.

Treatment of diseases. Of surgical treatment there is very little to be noted. Nothing in the way of operation is performed with the exception of circumcision (see *Legends*).

An abscess is allowed to burst, the excellent tumor is left untouched, but supernumary digits which are not rare, attended only by a few patients, are snipped off.

The natives cannot extract teeth. They are incapable of rendering any assistance in cases of difficult labor. Dislocations are not recognized as such, but fractures are treated by the application of wooden sticks placed at intervals round the circumference of the limb parallel to it and held in position by twisted pieces of bark string (Pl. XXII, fig. 3). The principle of the tourniquet appears to be unknown.

The only instruments used consist of a small knife for incision, a cupping-horn, and a primitive form of funnel for administering enemata (Pl. XXII, figs. 1, 2, 4). The knife has a triangular blade with a stem which is commonly twisted at one of the corners. The knife is used for wet-cupping, tattooing, and circumcision (Pl. XXII, fig. 1). The cupping-horn is a small horn of a calf. The open is placed and after application to the part, suction is made with the mouth and then the hole sealed by working a piece of beeswax over it with the tongue. The small incisions are made in the skin for the withdrawal of the blood. The cupping-horn is called *shoot* (*tokomkin*, Chin.). Cupping is used for headache and for pain in the chest and back. The enema funnel, *shipdipe* (*ishidiri*, Chin.) is made from the neck of a gourd to which is attached a hollow stem for introduction into the anus. Half a pint of an infusion of tamarin is injected for constipation associated with pain.

Peas, *mmmm* (*Pisum sativum*), are grown in abundance. There are two other varieties, *mmm* (*pomodoro*), and *ahahmmm*.

Sweet potatoes: *mhmm* (*Ipomoea batatas*), of which the natives are very fond; they distinguish a red and a white variety, *mhmm mpnjipu* and *mhmm mpmmmm*.

The tube-like root of a bush called *mpmhu* is also eaten, likewise the young underground shoots of a palm tree. The leaves of the sweet potato and the leaves of many wild growing plants are collected by the women and cooked like spinach; the flowers of pumpkins are used in a similar way. Of fruits eaten, the bananas, *lipombo*, takes first place. A very large number of species of *Musaceae* are grown, including *mahumbulu*, *mhinga*, *mahili*, *mmm'i mmpungu*, *lubulu* a dwarf banana, *lisipu* a wild banana, and *mhunga*, the plantain. The *pawpaw* is found all over the district. There are several varieties of pumpkin, *lipungu*, including *mhondo*, *chindwahili*, and a very large species called *mtoo ma mpamba*, "the crocodile's head." Varieties of *mmmmhmm* include *lingulu* and *lubinungulu*.

A large number of wild fruits are eaten, among them figs, *lubujo* (*Ficus*), *kindu* (*Cissus*), *chilili* and *lisungu*, the fruits of two species of *Landolphia*, *mutunga* or *Kaffir oranges* (a species of *Strychnos*), *chikondo*, the fruits of *Hyphaene* (palms), *mahombwe* (*Myrianthus*) a wild tree belonging to the mulberry family, and *mhoon*, *mhoon*, *mahungumbwalu*, *mhondo*, *chingulungulu*, *chinkungulu*, *mahondo*, *likwendu*, etc. The seeds from the heads of *lubwalwa* (*Typha*) are roasted up and eaten.

All fish are eaten except the sponge, which always causes urticaria.

The flesh of all the antelopes, of course, sheep and goats is eaten generally; only bushbuck is avoided by some people as it is said to cause a skin eruption. Elephant is shunned by many on account of its rough skin, also rhinoceros because of the shoot which it often has on its body, and hippopotamus on account of the marks on its back which are thought to be akin to leprosy. People eating the flesh of these animals are supposed often to sicken with leprosy, the pachydermatous skin, the elevation or anaesthetic depigmented patches of that disease being reproduced, on the man may be. Few will eat pig or warthog on account of the digging habits of these animals. It is thought they may sometimes grub up bodies from graves. These flesh taboos may be due to Mohammedan influence. The lion, hyaena, and fox are never touch, as they are supposed to be connected with witch; but the heart of the lion might be eaten to acquire courage. Few will touch leopard flesh, but Kamanga's descendants do so. All will eat of the flesh of the serval cat but very few of the common wild cat. The rock rabbit, *mpumpumbwa* (*mbira*, Chin.), is refused by most. Tree ca It is a "beast without shame," having no tail to hide what should in decency be hid. Very few will partake of the baboon, but monkey is acceptable to many. A few reject porcupine, supposing they will break out in spots, while the zebra may cause strikes, and none will touch the shrew. No one eats snake, a reason that is believed to die if it crosses a path. All kinds of rats are eaten, but the shrew-rat and mice-rat only by boys. Bushbaby

* See supra, p. 246.

4: Stabnow D-1 (ca. 1909)1910 FT7 Yao FT7
Marav FR4

M 632 this is then added to a brew of new beer and given to her husband to drink. He will then think of and love only herself. This is said to have caused the death of some husbands.

Ilpuri: medicine made and drunk by a woman to make her beloved by a certain man.

M 633 644 647 At confinement a woman has to answer whether she has ever committed adultery; if she denies an adultery she may die, if she owns up and gives the name of the man this can be remedied. Adultery on the part of the father or mother is said to be a cause of abortion.

M 637 A man going away from his village for several months and leaving his wife behind and wishing her to remain faithful puts a knife into its sheath and hangs it in the hut, telling his brother. It is then believed that should anyone commit adultery with his wife separation after the coitus is impossible till some third party comes and pulls the knife from its sheath, and in doing so becomes a witness of the adultery.

M 637 642 645 652 Eating of eggs is believed to cause impotence in children or adults. Much fat meat is said to have the same effect. It is believed that if a hare run up against the leg of a man while going through the forest he will become impotent. It is for this reason that dung of the hare is put at the door of a man to make fun of him as impotent. This is a trick played by *Ahuhulu*.

M 637 643 739 If a woman who has committed adultery puts salt into the food while cooking, of which her husband will partake, will thereby cause his death. At the present time among the Yao-Makonde community a woman always calls one of the children to do it—this speaks for itself. A woman, after connection with her husband, putting salt in food, may cause illness among any children partaking of the food.

M 637 If a man accuse his wife of adultery and she denies it, he will procure medicine and place it under her pillow, then in the middle of the night she will wake her husband and tell him the name of her lover.

M 767 777 *Mpingo* = ill omen. A journey would always be stopped if on setting out one of the party die; or should they meet an ant-eater or black snake. It used to be considered a sign of bad luck if one of them knocked the toe against a stone; now if blood flows from the big toe they say it presages good luck.

M 672 674 The Yao at the age of sixteen years climbs the *mtondo* tree, and finding a fruit which is soft makes a hole in the middle and inserts the penis. After this procedure the penis is said to enlarge as the fruit grows; when the size desired is reached the fruit is cut down.

M 627 The *mtiwa* says that every one has a small animal inside the ear, the sounds it makes causes the man to hear. If the animal escapes the man becomes deaf. The animal is said to be ½-inch long, and wax is said to be its excrement.

M 684 777 Where a man runs on a journey he often puts a stone in the fork of the nearest tree; on many journeys there are regular halting places, often at cross roads, and here every passer-by adds a stone for luck, making quite big heaps.

4:Stanmus D-5 (ca. 1989) 1910 FT7 Too FT7
Morovi FE4

Gape, the residue after pounding maize, is eaten by the women. No oils are used in cooking, but of fat and meat any native is very fond. Meat may be dried and smoked if in large quantity; flesh, fish and fowl is commonly roasted on spits; small pieces of chicken may be made into a kind of stew with beans and eaten as the relish. When on a journey the fire is commonly made against a tree. The cooking vessels are cleaned before use, not after. The dried fish eaten is often partly decomposed, and meat which is very high, even with maggots, is cooked and eaten, maggots and all.

Taboo.—Bushbuck is not eaten by many natives, as they say it feeds near graveyards. Fowls are not eaten by some, as this diet causes them to vomit; a snake-catcher never eats vegetables, and at the same time puts medicine on his hands. Many abstain from the flesh of certain animals as certain skin diseases are said to be caused thereby; all such diseases bear the same endeavoge.

A man who loses a relation by drowning takes an oath that he will never again eat fish, and never drink water from such lake, river, etc. Here the idea is of course simply to avoid eating part of the relation.

A Nyanja and Machinga will not eat the flesh of the hippopotamus, because on the body they say there are the marks of a string round the loins and of a mat on his back, adding that long ago he was a man. Animals of prey would never under any circumstances be eaten. Milk used never to be drunk by an adult, as it was said to cause a man to become as a child. A man would not dare to drink woman's milk as it was said he would surely die of dysentery.

Tobacco, etc.—The smoking of tobacco was a custom introduced from the coast. Chewing was general among Machinga and Yao men and women, while the Angoni and Mananja snuffed. With the tobacco a little lime, made by burning shells, was taken in the mouth. Giddiness and sleepy sensations were experienced after chewing. The Nyasa and Awisa smoke a hubble-bubble, the water vessel being a large sausage-shaped gourd with a reed stem supporting a large bowl of ebonite wood, sometimes very nicely carved (Plate XXVII, Figs. 5 and 7). The Amyanja smoke a pipe with the bowl made of clay and the stem of bamboo (Plate XXVII, Fig. 6); these are made by the women. Tobacco is grown in nearly every village, a large-leaved rather coarse variety; it is sun-dried and rolled up into hollow rings 6 inches in diameter and 3 inches broad. For snuff (*Fulin wowsam*) the sun-dried tobacco is further dried over a fire on a pan, when cold it is ground on a stone with a smaller stone by the women, and with it is mixed some ashes of the upon fig-tree.

At Blantyre I obtained a water-pipe made of bamboo stem; this was the water reservoir; a stem of reed supports a little clay bowl. The mouth is placed over the upper end of the bamboo. Bhang (*cannabis indica*) is smoked in a pipe of this kind.

AGRICULTURE.

The people live by cultivating the soil. Both sexes help in hoeing and planting, the collecting of the crops being mostly done by women. The hoe is the

ndondo, a woman who is pregnant for the first time;[1] *kawabwa*, a woman who has one or two children; *ajinakwa*, a woman who has three or four children, and lastly, *ndabwa*, a woman who is past child-bearing age.

The information which I have been able to collect on abortifacients and contraceptives suggests that they are not used by married people merely to prevent their having more children, but that they are used by people who wish to avoid pregnancies which would be embarrassing, for example, by a woman whose husband is a labour migrant. To what extent the abortifacients and contraceptives are effectives I cannot say; some, I know for certain, rely on a magical principle, for example, the medicated cord worn by a man during intercourse. On the other hand, the abortifacients taken orally may have some active ingredient.

A barren woman or an impotent man is regarded with some embarrassment and the marriage *nsimbwa* (*ninsimbwa-nsimbwa*) of a childless couple will go to considerable trouble and expense consulting diviners and herbers in an attempt to make their wards productive. Childless couples are regarded as not fully adult and are treated in a patronizing way by those who have bornne children. Since a man may marry other wives, barrenness in a woman is a cause of sorrow to her husband, but is not in itself a ground for divorce. Where the man is impotent, however, the woman may divorce him on this ground, though she usually takes a paramour and forces her husband to an action for damages which automatically leads to a divorce because it is the usual practice in these cases for the court to ask the woman if she wants to be divorced from her husband.

In contrast to the satisfaction shown at the birth of a child is the sense of *swelo* evinced when a child is still-born or the woman miscarries. The Yao do not distinguish between still-births and abortions, both events being known by the word *kwanga*. This is a verb and refers to the process of abortion; there is no term for the dead foetus itself. I made no attempt to enumerate miscarriages and still-births because they are supposed to be due to breaches of sexual taboos on the part of the husband and wife, and interviewees were naturally reluctant to mention them. Miscarriages and still-births are greatly feared, and the woman is considered to be in a very dangerous condition until she and her husband have carried out a ritual purification. Should a man have intercourse with a woman who has miscarried and not yet been purified he will contract a disease called *kwaw* which is believed to be invariably fatal. Still-born children or aborted foetuses are buried in a hole dug with sharpened sticks in the bush by the women, whereas children who are born alive and die afterwards are buried in the graveyard in graves dug by men with hoes. The burial spots of still-born babies or aborted foetuses are marked with a stone or broken pottery, since it is believed that to step on them will induce an illness.

The concern of the interested kin-group is shown in the child-birth procedure. Birth normally takes place in a hut in the presence of the older female relatives of the woman and the female representatives of the man. The husband's representatives are necessary because the Yao, like many other Central African peoples, believe that an adulterine child will not be born to the woman unless she confesses (*kapaw*) the name of the genitor. If she persists in concealing the identity of the genitor, they

[1] *ndondo* = elephant, hence ivory. The terms *Mbile* and *ndondo* here both refer to the ivory bangles ceremonially worn by the woman in the pregnancy initiation ceremony.

9:Hatharwick M-S (ex.1950) 1952 FT7 Tao FT7

779 they said, "we shall be able to take away their shadows and they would die." In their
123 mind the Soul was allied to the shadow or picture, and the removal of it to the photographic plate would cause the disease or death of the shadow body.

As an instance of their faith in the close relationship of the Soul and the
123 picture or shadow, I may relate the following incident. An influential Yao chief
753 on Mount Zomba with whom I was on terms of intimate friendship for years,
779 refused to allow himself to be photographed, fearing the consequence on his life. At last I was able to persuade him to give me a sitting, but on the sole condition that the picture was to be shown to none of his subjects but to be sent out of the country as soon as possible. He feared lest some ill-wisher might see it as a means towards his bewitchment. Some months afterwards the chief became seriously ill, and in the minds of his attendants his illness was attributed to some accident having befallen the photographic plate on which they believed the picture of their chief to be imprinted. If that negative had been broken in England, whither it had been sent, their chief's illness would be accounted for. Accordingly they appealed to the divining oracle, who, however, after consulting the "bones," assured them that the picture was intact, and that its consequence the disease must be ascribed to some other cause.

779 The Soul or soul is recognized as the chief agency in disease. To dream is,
787 in the Yao tongue, *kwapenda* mzimu, where mzimu is the plural form of Soul. The Soul is supposed to go out and visit the scene and persons in dreams about, and in turn is visited by the souls of others, dead or living. Pains in the body on rising from sleep in the morning are usually attributed to such nocturnal visits,
[753] while disease or pains of a severe type are ascribed to contagious by the whips of the souls or more frequently of the witches who prowl around during the night watches.

779 Madness, idiocy and the ravings of delirium or disease are accounted for by a
828 similar agency. The sufferers are as mazuki, they of the spirits, and a sudden fit of epilepsy or insanity is described as *gulumwali* mzimu, the spirits have seized him. Such persons are literally regarded with awe, as living in close contact with the unseen, but no incantations or enchantments are ever used to expel the spirit in possession. Some native doctors are credited with a knowledge of certain
[755] medicines which they say are effectual in such cases, but their application in no way differs from those employed in treating ordinary types of disease. Idiots and the insane are allowed to wander at will about the village, and only when violent symptoms show themselves as a danger to the community is any physical restraint put upon them.

759 The mazuki are also recognized as the inspiring agencies in the ravings of the witch detective. This person, usually a woman, is called in to discover who is the guilty agent in cases of mysterious deaths or outbreak of an epidemic at a village. She arrives on the scene and takes up her abode for a few days previous to her actual demonstration. She mixes with the people, hears all the scandal and gossip of the community, and at night prowls about the houses searching for

are composed of the descendants of slave-wives of village headmen in days past. Like the village headmen the chief was considered to be in danger from sorcery with death. He could not attend the funeral of commoners, he could not eat the chicken which was brought to him at the announcement of the death of a commoner (for a village headman) or subject (of a chief). Should he do so he would suffer from a disease called sabbe. Also village headmen, like the chief were supposed to be well versed in medicine and were regarded with some awe on this account. The chief and the village headmen were distinguished from the commoners in these ways.

But, the chief himself was a village headman. He had to administer the affairs of his family group and shares as had other village headmen. He was involved in the struggle for power going on around him because he was not lifted above these secular struggles as was, for example, the Zulu King.[8] Duff MacDonald records for example: "In a dispute between the inhabitants of different villages, the respective headmen represent their own subjects, and the chief is appealed to. All his decisions are final. Still the chief may otherwise have less influence than a powerful headman, and we have known cases where he simply contented himself with grumbling when his headmen acted contrary to his desire; and in many criminal trials he is eclipsed by the sorcerers and pounders of poison."[9] Again MacDonald records how the chief tried to entice subjects away from a village headman at a trial by pointing out that the village headman had a poor character and was unsuitable to look after people.[9] While there seems to have been some evidence that a number of village headmen under a chief acted jointly in the face of a common danger, but apparently with no powerful military organization. Village headmen seem to have been almost entirely autonomous in their actions, slave-raiding on their own, even raiding villages who paid tribute to the same chief as they did.

1: Tew . E-4 (no date) 1950 FT7 Yao FT7

Kangambe, used to persuade Nyanja to help in the unofficial rite. When Kapeni in turn fled to Mount Sache from the Ngoni, and died there, the Yao addressed their allegiance to him, not to Kangambe.[1] The word *Mulungu* has sometimes been interpreted to mean Supreme Being, God, Creator, but among the Yao it seems not to have any personal connotation. It was used to describe the agent in any mysterious event,[2] or the place where the ancestor spirits (*mizimu*) were supposed to dwell. Daily life was full of acts of respect towards the ancestors, who were regarded as jealous of the living, and requiring constant propitiation.[3]

Sorcery

Accusations of witchcraft and measures for dealing with it play a dominant role in Yao social life. With certain exceptions nearly all diseases and deaths are thought to be caused by sorcery. The exceptional causes are: the hand of God, old age, the transgression of certain taboos, and battle wounds. If sorcery is suspected the relatives of the sick or dead man consult the diviner to identify the offender.

Yao (in common with the Mawri and many peoples of Central Africa) believe that sorcerers have a craving for human flesh, which they satisfy by killing with magic the victims of their malice and hatred. They acquire their magical powers by an apprenticeship, which might include incestuous relations with mother, sister, or mother-in-law, or sleeping on the grave of the mother for one night. The sorcerer then learns the incantations and finally demonstrates his power by killing a young relative by magic; he waits till the victim is buried, and then magically exhumes him for the secret feast with his fellow sorcerers. Each sorcerer who shares the flesh owes a debt to the one who secured the victim.

Charms are used as preventive measures against sorcery. When a diviner has diagnosed the cause of death as sorcery, retaliatory measures are taken. The headman of the village could either call in the witchfinder to identify the offender or he could call in the diviner to take action against all the sorcerers in the village. After the diviner, *Mabiliile*, had revealed the guilty ones, they were challenged to take the poison ordeal to prove their innocence. If they died, the proof and the punishment were simultaneously accomplished. If they survived, the diviner was held to have been at fault and they were acquitted. The witch doctor was supposed to entice sorcerers to the graveside, and slay them with magic more powerful than their own.

The diviner's findings are to-day checked by the poison ordeal administered to a chicken. A sorcerer detected in this way might be asked to provide medicine for the man whose sickness he had caused, or after a death he might be compelled to pay compensation. If the accused is a village headman, he will not be summoned before a chief, but his brother will take the villagers away from the sphere of his influence, or he may be chased away from the district. Accusations of sorcery follow certain regular lines. Nearly all accusations fall on relatives. Diviners are consulted by matrilineal relatives of the sick or dead person, and the man most usually accused is the brother of the accuser, or the husband of his sister. Witchcraft is therefore a manner of expressing the hostilities latent in these relations, which are, in the Yao social system, full of tension.

[1] Macdonald, 1882, vol. i, p. 70.
[2] Hetherwick, 3, 1900.
[3] Hackel, 1935, pp. 14–15; Macdonald, 1882, vol. i, pp. 58–75, 204–13.

2: Mitchell E-5 (1946-1949) 1956 FT7 Yao FT7

vomited human flesh.[1] They said that they had a strong headman and that they could trust him; he was a good headman without witchcraft. If he had been a sorcerer they would have kept scolding him until the next morning.

About two hours after sunrise the people gathered and started dancing. At about this time Cimombo was brought out of the hut and put in the grass shed which had been built for the occasion. This was the climax of the ceremony.[2] He sat on a chair in the grass shed with one of his two wives on either side. Makoka then started a chant, exhorting the visitors to come to throw pennies at Cimombo's feet. Some of the people there made speeches about the type of behaviour they would expect from him. Then Nyambi arrived from the court village in a rickshaw. When the noise had subsided he told the people that if they disobeyed Cimombo it meant that they disobeyed the chief. He emphasized the importance of the rank of the new headman. After the speech he presented 12*s.* to Cimombo which was received on his behalf by Ncimbo. Nyambi then left and the ceremony was over, but the people remained to dance and drink beer.

This description of the procedure following the 'coming out of the hut' is somewhat sketchy. The interaction of the headman and his villagers on this formal and ceremonial occasion is of great interest and importance. During the entire ceremony the headman adopts the pose which is appropriate for any Yao initiand. His hands are on his lap or on the arms of the chair and his head is bowed forward with eyes downcast. He neither speaks nor moves. His attendants, when necessary, wipe the sweat off his face or chase away the flies. The other occupants of the mat, who may be his wives, and sometimes his heir, adopt similar postures. In contrast to this, is the behaviour of the villagers who run about shouting wildly, the men discharging muzzle-loading guns, and women ululating in the typical Central African way.

Before the new headman comes out of the hut his mentors

[1] This is a test based on the witchlore of the Yao, who believe that sorcerers kill relatives with magic and then share out the flesh of their victims with fellow-sorcerers in ghoulish feasts.

[2] Called the 'coming out from the hut' (*kukupoka nyumba*). It is of course the first public appearance of the headman in his newly assumed status.

2: Mitchell E-5 (1946-1949) 1956 FT7 Yao FT7

strike out with his adherents to found a new village. A sum of £6 or £7 is a considerable amount in everyday Yao life where the annual cash income of the average individual is not much more. The leader of a dissident group is prepared to forgo this wealth to get one foot on to the lowest rung of the political ladder—that is by becoming a village headman. 621 166 627

Obviously there is a great deal of sentiment attached to the idea of a united village. To the Yao way of thinking a village is broken by fighting or death, and these evils are linked by witchcraft beliefs. The association of death and the break-up of the village is brought out clearly by the funeral ablutions of villagers after the burial of one of their number. An important ingredient in the medicine with which the mourners wash themselves after the funeral, is *cikula*. It is the earth from a particular type of termitary which is usually about 12 to 18 inches high, upright and almost cylindrical. The crust is very brittle and it is comparatively easy to chip off a piece. When this is done a mass of internal chambers and passages is revealed. The soldier ants, unlike those of other species that retreat into the darkness of their passages as soon as they are exposed, come into the open daylight and swarm in confusion over the fractured termitary. When I questioned my informant about *cikula*, he kicked the crust off the top of one of the hills and said, 'See all the houses in the village of the ants? I have broken their village. So it is with death. It breaks the village.' 621 784 783 835

The Yao believe that death 'breaks the village' and that conflicts through sorcery lead to death. Therefore, conflicts are the real cause of village splits. Hence differences must be settled immediately if the village is to persist, because if they last too long one of the aggrieved parties is sure to start using sorcery against its opponents. Those who do move away, go to a distant place because they believe that sorcery operates only where there is social interaction. But the fear of sorcery on the other hand is just as strong a force in maintaining the physical unity of the village. It is while the migration is being planned that sorcery is most likely to be used. This is particularly so if the village break is taking the form of a lineage split. This happened, for example, in Lupunje village. 621 754 626 621

Kalambo, the sister's son of Lupunje, wanted to leave the village and had gone to seek a suitable site. When he returned he found that 626 753

2: Mitchell E-5 (1946-1949) 1956 FT7 Yao FT7

dimesu ndaka.[1] This disease, as we have seen, affects the sexually inactive when they are brought into contact with those who are sexually active. But the disease will only affect the members of the matrilineage of the errant person. For example, suppose a labour migrant is coming home from Southern Rhodesia and has, among other things, a few pounds of salt in his baggage for a gift to his relatives. Suppose also that while he is returning he has promiscuous intercourse. The salt becomes charged with sexual heat and if he gives it to any of his matrilineal relatives to cook with, they will contract this disease. He must therefore give the salt to members of another matrilineage, even if they live in the same village. 613 753

It is when the unity of the matrilineage is threatened, by either death or division, that its mystical value appears most clearly. When a member of the matrilineage dies the whole matrilineage is thrown into mourning and remains continent for three days. On the fourth day they perform a ritual purification and some members resume sexual relations, but the closest matrilineal relatives, such as the mother and uterine siblings, remain continent for the remainder of the mourning period, which is about 36 days. 613 765 834

It is tension within the lineage which is most closely attended by dire results. The most important reflex of this tension is accusations of sorcery. Good relationships among members of a matrilineage are adjured, mainly because friction opens the way to sorcerers. The Yao believe that sorcerers kill their matrilineal relatives so that they may share the flesh with other sorcerers. The sorcerer is fundamentally a wicked person and may kill any relative but is more likely to kill those whom he hates. Hence it is most important that relationships are kept amicable within a matrilineage for fear that sorcery ensues. 613 626 754

An interesting variation of the dangers of sorcery is the belief that sorcerers take the opportunity of squabbles within a matrilineage to kill one of the members. The rationale behind this is that the diviner's instruments are unable to detect the origin of the sorcery beyond the immediate cause. A diviner will indicate that the cause of death of, say, a child is sorcery, but that the witch is obscured behind the quarrelling words of some relative. Consequently, danger to a matrilineage ensues when one of its 613 754 578 626

[1] See Chap. V, p. 112.

613 members goes to an outsider and grumbles to him about the
659 family squabbles[1] and quarrels. The outsider then takes the
578 opportunity of using this squabble to introduce his sorcery into
626 the lineage. The Yao greatly fear backbiting because of their dread of sorcery and never decide it more than a village headman, a warden of a security-group,[2] or a person in the position of having to keep a matrilineage or section together. These people are continually adjuring the women under them—for it is the women who are believed to be the main culprits—not to fight among themselves; and if they do, not to take their complaints to an outsider but to the senior member of the matrilineage. The significance of this in relation to lineage unity is plain enough.

613 Apart from sorcery, strained relationships between members of
578 a matrilineage are believed to be dangerous for other reasons.
843 Malice may adversely affect people who are in mystically danger-
229 ous states. The most common of these states is pregnancy. If a woman has a quarrel with a matrilineage member while she is pregnant she is likely to have a difficult labour. The Yao say 'the womb has heard these bad words'. Another situation where malice or quarrelling will cause difficulties is in hunting. The luck of the chase is capricious and malice may easily bring bad fortune to an otherwise good hunter. For example, a successful hunter once gave each of his two sisters a piece of venison. Each complained that the other had been given the larger piece and quarrelled vehemently about it for weeks. The hunter now found that no game fell into his traps. He went to a diviner who indicated the quarrel of the sisters as the cause of his failure and told the hunter to get them to 'blow water' (*huperyo*). He did this; good relationships were restored and his traps were filled once more.

613 These deleterious effects, like the curse, are connected in some
578 way with the ancestor spirits. This is sometimes expressed quite
769 clearly when a person is called upon to 'blow water'. A mother who wishes to revoke a curse, a woman who wishes to recant her malice towards her matrilineal relative who is suffering
755 in childbirth, or a man whose sister's son is ill supposedly because

[1] This is called *mieet*, which I have translated as 'backbiting'. This idea is extremely important, as we shall see later.

[2] i.e. those men who are responsible for their sisters and their descendants. See p. 145 ff.

2: Mitchell E-1 (1946-1949) 1956 FT7 Yao FT7

[90] brother, is called *anyaw mbumba*, or 'the warden of the security-group'. As one would expect among a matrilineal people, the link between a man and his mother and sisters is strong. But it is the link with his sister that is strongest. She relies on him for protection, particularly when she becomes ill, but also in her [92] relationships with her husband. Her brother will be her junior marriage sponsor, and he will give the consent which will allow a man to marry her. Also a woman's brother will have to consult the diviner and find the medicines when she or her children [79] sicken. In times of distress, as, for example, if her crops have failed, she will appeal to her brother for help. Similarly the man is dependent on his sister in a number of subtle ways. He can always rely on her for hospitality, and is able to get a meal from her if he needs it. But his dependence on his sisters for prestige is much more important. The significance of this will emerge when we see the *mbumba* organization in the light of the segmentation and fusion of the lineage. A man can only found a new village if he has the full support of his sisters. A sister also plays a most important rôle at the birth of his children. She represents him both at the first foetal-quickening ceremony and at the birth of his child, when she listens to the birth-pang confessions of his wife.[1]

At the same time the relations of sister and brother are restricted by custom. A man must never appear too familiar with his sister, especially in sexual matters. He may not, for example, [91] sleep in the same hut as she does; if she is away and he sleeps in her empty hut he must not make his bed in the place where she usually sleeps. He may not even sit on her sleeping mat. [93] Authentic cases of incest with a sister are extremely rare, whereas I recorded three or four cases of father-daughter incest while I was in the field. Supposed cases of brother-sister incest are recounted and discussed widely. This is understandable because [95] a man who is suspiciously familiar with his sister is suspected of being a sorcerer, since it is widely believed that a sorcerer usually obtains the power that he needs for the performance of his dire deeds by sleeping with his sister. The riddle of the initiands—'What is the sweetest fruit which may not be tasted?' Answer, 'Your sister'—neatly reflects the attitude of the Yao.

The close link of brother and sister is also reflected in the

[1] The significance of this is explained in Chap. VII, p. 185.

2: Mitchell E-5 (1946-1949) 1956 FT7 Yao FT7

a definite pattern. Very frequently indeed an accusation of sorcery is involved.[1] This usually stimulates a dissatisfied warden to gather his dependants together and to move off to found a new village. Elsewhere I have set out in detail the typical events which precede a village break-up when the lineage splits after a man quarrels with his mother's younger sister's son.[2] These splits are not always successful because the seniority of the older relative, especially if he is a headman of some standing, may serve to reunite the village, and the leader of the dissident group may be unable to maintain its independence. This is what happened in Mwambajila village.

Mwambajila is one of the more important village headmen in Jalasi's area. The tension between him and his mother's younger sister's son Mbwana Somu reached a climax after a series of deaths among Mbwana Somu's children. He consulted a diviner and found that Mwambajila was the sorcerer causing these deaths. Mbwana Somu was very angry at this and told his sisters that they ought to leave the village and go to live in Liwende's area, i.e. about 15 miles away. Eventually he persuaded them to move and they went to live on the Masanje river banks. But the deaths continued. The women now started to be worried because they had left Mwambajila's village

---

[1] The implications of this cannot be understood without some knowledge of Yao divining procedure. The type of divining is usually by gourd and objects (*ukuwe*). The diviner first of all establishes the reason for the visit, i.e. death, illness, theft, or whatever it is. He then empties his gourd and throws into his hand a variety of symbolic objects. He builds a story round these objects, and finally pronounces that he sees some person whom he vaguely defines. The consultor is then asked to mention who this could be. Though sorcery is supposed to be practised mainly in order to get human flesh for ghoulish feasts, it is not believed to act haphazard. In other words, a sorcerer is supposed to select his victims for revenge as well as for meat. The selective processes at work, therefore, when the consultor seeks to reconcile the diviner's findings with his own suspicions, are that he should select someone who is obviously evil, i.e. from his point of view, one with whom he has been quarrelling, and he should appraise the possible motivation for sorcery. After he has made the selection the name is tested by the diviner and the consultor may later submit a chicken to the poison ordeal to test the diviner's findings.

This, of course, confirms Evans-Pritchard's analysis of Azande witchcraft and I here acknowledge my debt to him for stimulus both from his book and from the discussions we have had on the topic. I assume his analysis in my discussion. See Evans-Pritchard, E. E., *Witchcraft, Oracles and Magic among the Azande*, Clarendon Press (Oxford, 1937).

[2] In *Seven Tribes*. Case History II, 321.

2: Mitchell E-5 (1946-1949) 1956 FT7 Yao FT7

578 and that he could not understand who could be inducing them to
593 talk like this. He told them also that as far as he was concerned they
624 could report the case to whomsoever they wished. The women came out of the hut and went straight to Pawesi who was the headman's younger brother. He told them to go back and to wait a while before they took further action.

578 After four days had passed the headman's sister who had fought
593 with the headman's wife, became ill. In the morning the sisters sent a message to Mponda but he did not come. They sent another
759 message to Pawesi who came and asked if they had told Mponda.
787 They said that they had, but he had refused to come. Pawesi called James and Ajuna, the sister's sons of the headman, and told them that he would tell the headman that they were going to find out the cause of the illness. This they did. The diviner indicated that the headman had caused the illness by sorcery, because of the fight between his wife and sisters. Pawesi tested the divination by giving a chicken some poison. It died, indicating that the divination was accurate. He took the chicken's head to Ngunga who was Mponda's perpetual mother's brother.

When Ngunga heard this he refused to believe it. However, he agreed to send for Mponda and to ask him about it. When he did so Mponda denied the accusation. Ngunga now produced the chicken's head and accused Mponda of being a liar. At that moment a child came to tell them that the woman was dead and the interview ended. They went to the funeral and the next morning they decided to have a post-mortem meeting (*mapeto*) in order to decide the cause of the death. Mitomoni, one of Nyambi's perpetual sons, represented the chief. Ngunga opened the discussion by telling the meeting that the woman had been killed by the headman because of the fight between his sisters and wife. Mitomoni asked how they knew this and Ngunga told of the divination and the poison ordeal. He then asked Mponda if he had heard what had been said and what he had to say. Mponda replied that he knew nothing of it. Ngunga said that Mponda was a bad man and that the others would leave him and he would have to live alone. Mitomoni told Pawesi and Ngunga that they must not leave the village. Ngunga replied that it was impossible to stay there while Mponda was so bad. If the women stayed with him he would finish them all. Pawesi collected 30 of the 40 huts that made up the village and took them away to Chikweo's area, a distance of about 15 miles. Those who stayed behind with Mponda were his 'children' and some unrelated people.

593 This case brings to the fore the position of the younger brother
578 as a constant challenge to his elder for the care of his sisters.

2: Mitchell E-5 (1946-1949) 1956 FTT Yao FTT

the arbitrators awarded 30s. compensation to be paid by Cikuba to Cikoja, less 5s. owing. This money was to be paid to Ayesi in compensation for the loss of her baby. Ayesi, however, refused to accept the money because she said she wanted to have her baby. The matter now became an inter-segment affair and Cikoja, Amidu, Kanyenga and Kaifa (F36), the son of Ayesi, with Bt. Amina had a meeting on what to do. Ayesi was quite adamant about it. There was nothing to do but to drop the matter, and the state of tension between the segments remained as it was before. 613 578 965 683

The next incident occurred in 1943. Mpakula, the husband of Bt. Amina, had some goats. One day two of them strayed on to the verandah of Bt. Madi's hut. Bt. Madi (F70) was the daughter of Amina (F2) and a member of the senior lineage segment. One of the goats moved its way into a basket of flour that was lying under the verandah and started to eat it. Bt. Madi came out and picked up a log that was lying nearby and threw it at the goat. It broke the goat's leg and the goat had to be destroyed. The owner, Mpakula, who was watching at that moment immediately rebuked the woman. He went and reported the matter to Cikoja and he sent a message to Mpakula's marriage survey who sent back to say that they would meet at Chiwalo's hut the following morning. The arbitrator in the case finally decided that the correct action should have been to take the goat to the owner and to lay a complaint against him. As it was he had to award compensation of 30s. to be paid to the owner of the goat. Mpakula, however, refused to take the money. He argued that although the goat was his, so was the offender.[1] He said that he was afraid of sorcery so he would take a token amount of 3s. only. Cikoja gave him this.[2] 578 613 685

A few months later the eldest child of Bt. Bwana Isa (F16) suddenly fell ill and died.[3] Kanyenga, Kaifa and Mzuza went to the diviner. Kaifa, the son of Ayesi, went as the headman's representative. Kanyenga went as the warden of the sorority-group, i.e. the child's mother's brother. Mzuza was the marriage survey of the child's father. Kanyenga consulted the diviner who indicated that Kanyenga's mother Bt. Amina was responsible but that she was not a sorceress. Sorcery, he said, was introduced by an unknown person who was using Bt. Amina's grumbling as a screen. Kanyenga refused to accept the finding of the diviner, saying that his mother had never been 'caught' 613 578 754

[1] His wife's collateral sister's child he also calls 'my child'.

[2] Mpakula is a stranger in the village and in this situation Cikoja represents both segments to Mpakula, even though the senior segment is guilty.

[3] Sudden illness, called *chisuno* or 'the hammer', is believed to be without a doubt due to sorcery.

2: Mitchell E-5 (1946-1949) 1956 F77 Yao F77

613
578
759

by a diviner before. He went back and reported the matter to Cikoja who accepted the finding. Kanyenga, however, argued that the real sorcerer was using magic to confuse the diviner. After some argument Cikoja sent for the then senior living member of the matrilineage, Bt. Mkwinda (C6), who was living in Chulo district, for Mbunda, a perpetual brother, and for Cilwanza Kawinga, his perpetual mother's brother. A big meeting was held at which all the important local headmen attended. The case was argued on the point whether Bt. Amina and her husband, who was implicated in the accusation, could be sorcerers. After some argument the court decided that it was impossible for Bt. Amina to be a sorceress without Cikoja also being a sorcerer, so that the accusation now settled on Cikoja himself. The case was taken up to Chiwalo who refused to award compensation. He reviewed the various charges of sorcery that had been made in the village before and observed that after the death of one of the supposed sorcerers the village had lived peacefully. He deplored the new friction and warned that there was to be no migration from the village. He advised Cikoja to modify his sinews if he could. Kanyenga, Cikoja's eldest sister's son, said that he did not think that it would be possible because the headman had virtually accused his sister of sorcery. Cilwanza Kawinga now said that there was no question of whether it could be done or not. It simply had to be done.

About one month after this episode, Ajina (F26), the last-born child of Bt. Amina, who was about 2½ years old, died after two days' illness. When he was obviously very ill Kanyenga left with Mpalalala to call Amidu. They went first to wake Cikoja who in turn sent for Gwili (F4) to be his representative. Kanyenga went off to a diviner at daybreak without waiting for the father's marriage sorcery. The diviner indicated that there was tension in the lineage which was at the back of the child's illness. Eventually, he indicated that Bt. Ntalika (F3) was the cause of the illness and it harked back to the dispute over the sifting basket and the goat. The diviner prepared suitable medicine and the two went back to the sick child. They got back about 8.30 a.m. and found the people congregated at the hut. In the meantime, Cikoja had sent off another divining party, Amidu (F18) and Jauma (F7). Kanyenga prepared the medicine and gave it to the child. It seemed to be getting no better and before Amidu and Jauma returned Cikoja sent Kanyenga and Gwili out to divine again. Then Amidu and Jauma returned and indicated that the same person was responsible, and almost immediately afterward Kanyenga and Gwili came back with the same result. When Kanyenga heard this he went to Chiwalo and reported the matter. Chiwalo sent a messenger to call Cikoja, Bt. Ntalika and her eldest sister's son Cilimba (F1), who was the senior male member of the senior lineage

2: Mitchell E-5 (1946-1949) 1956 FT7 Yao FT7

613
578
759

segment. They were to go to Chiwale's hut the next morning. During the night the child Ajim died, and Chiwale remarked that Cikoja was bad at heart and that he merely killed his people like chickens.[1] Four days later after the funeral a meeting was held to decide the cause of death. The arbitrator and chief's representative was the local court messenger. The man's party opened the discussion saying, 'If Cikoja is tired of us he should tell us. To-day he is killing his child. We know that Mpulula[2] has begotten a sheep. The sheep pen is filled and when Cikoja wants to eat he merely eats these.'[3] The arbitrator said that Cikoja had done a shameful thing and that they should make up a divining party to find the cause of death. Kanyenga immediately denounced and said that they had divined three times with the same results. Further divination was a waste of money. He insisted that they called Cibwana Kawinga. The meeting broke up and Cibwana Kawinga was called for. He came a day or two later and the meeting was resumed. He said, 'Cikoja, you are evil.[4] You have found it impossible to keep the village. Now what are you going to do with your children? The man's money says that he is going to take Mpulula away. Your brothers say that they are going to take their mothers away. Now what do you say to this?' Cikoja had no reply to make. Chiwale then said that he would have to pay compensation to his sister. Kanyenga, however, said that they did not want money. They wanted to go away. Cibwana Kawinga here checked Kanyenga and told him that they would take Cikoja and give him a talking to, and instruct him on the traditional way of keeping a village together.[5] Chiwale accepted this settlement of Cibwana Kawinga and endorsed his action.

When they got back, Cilimba told Cikoja and Mbunde that he wanted to move out of the village because his 'mother' had been called a sorceress by his 'brother'. Cikoja was anxious to avoid further trouble and told his lineage members that he was going to build a hut for his second wife some distance from the village because his first wife did not get on with her. He put up a hut about half a mile away across the Nanwoce stream. Cilimba (F1) who was living virilocally, his mother Bt. Ntalika (E1), Bt. Mbwana (F2),

[1] This is a reference to the ghost-motif in Yao witchlore. Cikoja here, of course, is a symbol of the whole lineage, so that this imprecation is directed toward the whole lineage and not to Cikoja personally, as in the last dispute.

[2] The father of the dead child.

[3] Mpulula had begotten eleven children. This is another reference to the ghost-motif.

[4] *Uchwo*—this word is also used to mean 'polluted'.

[5] *Kala ntawe wakwe mwi*—'the building of a village of old'.

2: Mitchell E-5 (1946-1949) 1956 FT7 Yao FT7

Kausi (F3), Bt. Madi (F12), Bt. Aliya (F11) and their children moved across the stream and built with Cikoja. One of Cikoja's wives stayed in the old village and the other moved across. Shortly after this Aimauma (E6), Cikoja's sister, decided that she would like to move across to be with the headman. She reported to Kanyenga who sent her to tell Cikoja. Cikoja in turn sent her to tell Amida. Eventually, Cikoja, Amida, Kanyenga and Salimu (D3) had a meeting about it. Neither Amida nor Kanyenga, nor Salimu, was enthusiastic, but they said she should follow her own wishes. She moved across with her children. Aimauma's arrival on the other side of the stream was greeted with some suspicion by Cilimba because she was a member of the junior lineage. However, Cikoja assured him that he wanted one of Aimauma's daughters to fetch water for him. Cilimba was satisfied with this explanation and accepted the situation as it was.

It was not easy, however, and there were continual quarrels between the children of Bt. Ntalika and those of Aimauma. The members of the junior segment in the old village also looked upon this arrangement with some suspicion. The friendship of Amege (F18), Aimauma's daughter, with Asubiya (E9), her mother's younger sister was particularly deprecated by the members of the junior segment. Asubiya was warned several times that this friendship could only lead to sorcery.[1]

In the meantime, Salimu (D3), who will be the next Cikoja and who was the senior lineage member in the old village site, undertook most of the duties of the headman in that section. He settled most of the minor cases and saw to the divining. However, he reported his doings to Cikoja who was still the village headman.

In 1948, another death took place and the tension became evident again. Bt. Ntalika's child died. Kausi (F3) and Jauma (F7) went to the diviner, who revealed that Amege had gone to Salimu to grumble about what was going on in the other village, and Salimu had taken this opportunity of bewitching the child. Cikoja refused to accept this explanation and said that the diviner was a liar. When the body was being washed, a knife was found under the mat on which it was lying, and the story went around that a piece of flesh was taken out of the dead child's buttock.[2] Cikoja interpreted this as meaning that Bt. Ntalika herself had bewitched the child. He felt it unnecessary to call a funeral meeting. Shortly after this there was some friction between Amisa and her younger sister Asubiya, arising out of jealousy because of the difference in their harvests. Bt. Amisa was convinced

[1] This is based on the fear of backbiting. See p. 138.

[2] Once a person is dead the matrilineal relatives do not touch him. They leave the hut and the undertakers (*ŵŵlo*) wash the body and prepare it for burial. They reported this finding to Cikoja.

2: Mitchell E-5 (1946-1949) 1956 FT7 Tao FT7

that Asubiya in her jealousy had gone to grumble to Bt. Ntalika about this. Rajabu (F20) who had heard about this called Cikoja and they assembled Bt. Amina, Bt. Bwana Iu and Asubiya in Bt. Amina's hut, and spoke to them about the dangers of backbiting. Cikoja remonstrated with the women saying, 'I don't want to hear about this again. When you love people do not love people who are strangers. Do not talk behind people's backs and bring war in the knots of your body-cloths.' 613 578 754

A few weeks after this, in June 1948, Alewinda (F27), a 3½-year-old daughter of Asubiya, died. When her mother saw that the child was seriously ill she took her to her patrilateral relatives in Liwonde area. She had barely got there when the child died. The headman of the village sent a message back to Cikoja to tell him of the death. He in turn sent a message to Amidu and Rajabu and they went to the village to attend the funeral. After the first mourning feast three days after the funeral, Kaifa, the child's mother's elder sister's son, and Malewaga, representing the village in which the child had died, went to a diviner who indicated that the cause lay in the backbiting of Asubiya about Bt. Amina, but that the sorcerer was Bt. Ntalika. The tension now had reached almost breaking point and after about six months Bt. Ntalika moved out into Liwonde area without announcing that she was going.

At the end of December, Asubiya's son Selemu (F46), aged 4½, suddenly became ill one night. In the morning Amidu and Rajabu and Nkatawila (D20), who was the husband's marriage surety, went to a diviner. He indicated that the cause was a girls' initiation basket which Ayesi kept. This basket, the diviner said, kept losing its strength and it was only on the death of a close relative that it would regain power. They returned and when they got near the village they could hear the women keening. They agreed that the diviner was a liar and returned and got their money back. The body was buried on January 3rd, 1949. Asubiya now left the village without announcing her intention and went to complain to chief Kawinga. Cikoja in the meantime, noticing that Asubiya was not present at the funeral, sent out men to search for her. After two days Kawinga's chief court assessor, Masunda, brought Asubiya back to the village. He told Cikoja that he had cross-examined her and found that she said her elder sister was causing death because of her jealousy over the food. Masunda returned and some days later Kawinga wrote a letter to Cikoja telling him to come to the court village. This he did and was told to hold the mourning feast, but to take the people to the court village to hold the funeral meeting. There a divining party would be arranged and the cause of the death determined. 613 578 754 695

After the first funeral feast the people of Cikoja assembled at

613 578 754 695

Kawinga's court village. Masunda reviewed the events leading up to the calling of the meeting and asked Cikoja to give his statement. Cikoja replied, 'You say I am finishing the people. I do not deny it. If the people are being finished by my sister, then I am finishing them.[1] You may speak what is in your hearts.' Asubiya now made her statement. After this, Bt. Amisa was called out. She denied knowing anything about the case. Masunda at this point was about to send the case back to Cikoja when Matosa, a second arbitrator, asked who the marriage sureties were. Amidu came forth as the woman's surety. Matosa asked him to tell the court about Asubiya's marriage relationships. Amidu then reviewed the history of Asubiya's pregnancies. He pointed out that the first child had died.[2] The second one also died. The diviner had indicated that she had broken a sexual taboo and the child had died from *ndaka* as a result. The third child was still alive. The fourth had died recently. The fifth was the one about whom there was a case that day. He recounted how they had gone to a diviner and how he had indicated that the cause of the death lay in the backbiting which the person herself had done. Masunda cross-questioned Amidu about the *ndaka* medicine that was given and assured himself the complainant was satisfied that the second child had died of *ndaka* and not sorcery. Masunda then called Salimu since the woman was living at the old village site under Salimu's charge. Salimu, who works as a tailor in an Indian store some miles away, said that he did not have a great knowledge of the case. Cikoja said he had nothing to say. Eventually, after some hours of cross-questioning, Masunda decided that a divining party must be made up and the results of the divination reported to the court. Bt. Amisa now stood up and said she was prepared to undergo the poison ordeal to prove that she was not a sorceress. She said that she would go with them to the diviner to find out the cause of the death of the child. Masunda said that they would leave the matter at that. At the village they would have to decide on a divining party and they would have to give poison to a chicken to make sure that the divination was correct. After that Cikoja would have to report the matter to Kawinga and the case would be re-opened. Nyenje was at the inquest and said to Cikoja that if they were not relatives he would have other words to say to him about this business. As it was he did not see what he had to rejoice about. Cikoja said that he did not know, but that Nyenje should ask the owner of the village. Surprised, Nyenje said, 'Who is that?' Cikoja indicated Salimu.

[1] Cikoja is talking as a representative of his lineage here.

[2] The first death in a family is never divined for, because the Yao say that if this is done, it 'would chase the father away'.

2: Mitchell E-5 (1946-1949) 1956 FT7 Yao FT7

Salimu said that Cikoja ought not to speak like that because it only made things difficult.

Two days after this Cikoja called a meeting at Salimu's hut in order to choose a divining party. Eventually they chose Kanyenga, Asimama, Raisi and Musa. Musa was the witness for Kanyenga who represented the woman's party. Raisi represented the father's party, and Asimama went to be his witness. Cikoja gave them 5*s.* and they went to look for a diviner. Eventually they found one and Kanyenga opened the consultation. The diviner indicated that the cause of the death of the child was *litukula.*[1] The party paid him and looked for a place to sleep. The following day they sought another diviner. Kanyenga again consulted and was told that Bt. Ntalika and her son were sorcerers but that the mother herself was ill with *litukula.* Kanyenga rejected the *litukula* explanation and insisted on the sorcery of Bt. Ntalika and Cilimba. The diviner consulted again and said that the main cause of the death was the *litukula* and that the sorcery of Bt. Ntalika was added to the other. Asimama here insisted that the sorceress in reality was Bt. Amisa. The diviner rejected this. He said the best way to test the divination was to give poison to a chicken. The party was at a loss to know what to do. In two divinations, a *likango* was indicated twice, while sorcery was said to cloud the issue. They decided to give a chicken poison. They returned to Rajabu's hut in the village where he had married. Here they sent Rajabu to tell Salimu that they were about to test a chicken at the poison ordeal, but that he must not tell Cikoja. They gave two chickens poison, one for *litikula* of the mother and one for the sorcery of Bt. Amisa. The *litukula* chicken died, indicating that Bt. Amisa was innocent. When Cikoja was told this he refused to believe it and sent them to poison another two chickens. The result was the same. He now decided that he would take the divination to a distant place and chose to go to Ngokwe chiefdom. Kanyenga led the divination party again. They consulted the diviner and after much testing and retesting the diviner decided that the sorcerers were Bt. Ntalika and Cilimba and that the *litukula* had nothing to do with it. He also specifically excluded Bt. Amisa. The diviner now told the father's two representatives to stay behind while the woman's representatives fetched Cikoja. When he came, the diviner revealed the result to him personally. Cikoja was at a loss what to do in this situation. Two divinations including poison tests had indicated that *likango* was the cause, a third and very exhaustive one had revealed Bt. Ntalika and her son. Neither had indicated Bt. Amisa.

[1] *Litukula* is a type of pimple (the generic term for which is *likango*) which, when it comes to a head and bursts, causes the death of the last-born child.

613 578 754 695 Eventually, in March, he decided to take the case up to Kawinga's court. Cikoja was not willing to accuse Bt. Ntalika and Cilimba publicly. Accordingly he went to Kawinga but he did not send for Bt. Ntalika. When Masunda, the court assessor, heard this he refused to handle the case and told Cikoja that Bt. Ntalika had to be brought to court so that they could hear her statement. Cikoja and his people came back to the village and nothing more was done about it. In April, Rajabu wrote a letter to Cikoja telling him that he wanted to report him to Kawinga and to bring a charge for compensation against him because he had falsely accused his mother of sorcery.

I left the field in June and do not know what the result was.

The series of events are extremely complex. I have given only a summary of them. Nevertheless, the main themes in the history are clear enough. We see Cikoja as the representative of the lineage of any order whatsoever. We find in particular the opposition of the two collateral brothers, Kanyenga and Cilimba. They are the representatives of the two lineage segments in this situation. There is seldom any doubt about the affiliation of these two personalities. Consistently in the accounts of the divinations each rejects the diviner's finding if it accuses a member of his lineage segment. Note that the divination seance itself becomes a field in which the opposition of the segments is expressed. Kanyenga continued consulting diviners until finally he got the answer he wanted. His opponents rejected these findings and eventually even discounted the chicken ordeal. The diviners' findings and the results of the poison ordeals, therefore, are bandied about between the opposed groups, and though the whole procedure of divination and accusations of sorcery is directed towards the extirpation of discordant elements in the community, in fact, it is only a facet of the underlying cause of the tension—the opposition of segments in an ever-segmenting lineage.

613 578 In addition to the structural opposition of Kanyenga and Cilimba there is a certain amount of tension among Cikoja's uterine sisters. Bt. Amisa, Asimama, Ayesi and Asubiya have all had children. Bt. Amisa is the senior and the relationships between her and any of the other sisters are difficult. In addition to this there is the tension between the generations seen in the attempts of the sons of Amisa to bring a compensation claim

2: Mitchell E-5 (1946-1949) 1956 FT7 Yao FT7

604 627 sister's son. This, however, is not common because matters such as these, the Yao feel, ought to be settled within the matrilineage, or at least among kinsmen. The more usual procedure is for the mother's brother to take his complaint to some senior matrilineal relative who may be a perpetual mother's brother of the mother's brother, as say Cibwana Kawinga is to Cikoja.[1] Or if the matrilineage is part of a village, the mother's brother may take his case to his village headman, who is as likely as not his perpetual father. The senior relatives have the force of authority and public opinion behind them and frequently some agreement can be reached at this level. Where this is not possible, say because the perpetual elder relative lives too far away, the mother's brother may take the sister's son to court and bring the sanction of the Native Authority's punishment upon him. This is very rare.

604 789 There is still a certain mystical sanction behind the mother's brother's control over his junior relatives. This is based on the curse, which in turn draws on the belief in common ancestor spirits. A mother's brother may say to a sister's son or other junior matrilineal relative: 'If you have never sucked from the breast of my sister, nothing dreadful will happen to you.'[2]

604 754 The fear of sorcery is another force which operates to control the wayward activities of a sister's sons. People in senior generations are usually looked upon as having particularly wide knowledge of potent medicines. Though a sister's son may sometimes use sorcery against his mother's brother, the reverse is believed to be more likely to happen. I have recorded elsewhere[3] the details of a case where a sister's son left a village, against his mother's brother's wishes, to find work in town. He subsequently met his death in an accident while trying to get the honey out of a wild bees' hive in a treetop. At home his death was attributed to the sorcery of his mother's brother whose will he had frustrated.

604 578 On the other hand the sister's sons, while bound by an ethical code to honour and respect their mother's brothers, find that in fact these stand in the way of their own personal ambitions. A man's heir is his sister's son and it is quite understandable that there should be some tension between a man and his heir. But

[1] See p. 132. [2] See Chap. VI, p. 133.
[3] 'A Note on the African Conception of Causality', 54-5.

3: Stannus D-5 (ca. 1912) 1922 FT7 Yao FT7

845 one of Malemya's men died, after giving birth to quintuplets, some thirty years ago. Deformed children are buried alive. A large number of children is always hoped for and where polygamy is practiced, some families are of considerable size, although the mortality [165] among young children is very high. It is, of course, very difficult to state the child-bearing period among natives. It does not start so early as is commonly supposed, and I think the menopause is found within about the same limits as among Europeans.

Death. Natives of Nyasaland live to a good old age. That such is not the case I have 761 found to be one of the many fallacious beliefs concerning natives which should be relegated 165 to the realm of exploded theories, as I have pointed out elsewhere.[1]

Death in old age is recognised as a natural event but apart from this, all sickness and [754] death were formerly and are still to a large extent looked upon as the result of the machinations of some person, an idea which forms the outstanding feature in their belief in witchcraft, *usewi*.[2]

763 Here I shall mention the ordinary customs in the case of death. During the last hours of a mortal illness, a man is tended by his wife or wives; the head wife sits constantly supporting his head on her lap or against her breast. A woman is similarly tended by her mother, sisters, and friends. As unconsciousness sets in and the extremities become cold, they say, "His spirit has gone and only the heart remains alive."

The native does not like the idea of lingering on and a man on his death-bed will say to his sons, "Now watch me that I die quickly." He may take medicine to help him over that time or he may give his sons instructions as to what to do. Should a man linger unconscious for a long time, friends will ask his sons, "Did he give you any instructions?" If he has done so, the sons will then carry them out. This perhaps consists of bathing themselves in medicines left by their father, while they stand on the roof of his house. Sometimes, the natives say of a lingering case, "Ah, perhaps he has eaten of a tortoise's heart!" [805] knowing the phenomenon of the tortoise's heart and believing that by partaking of it, the same property can be conferred on the heart of a man.

764 When death is manifest, the body is covered with a cloth by a brother, a son, or some other person in attendance. The eyes are closed, the mouth shut, and at the present time, [197] the body straightened out. This, however, is a recent practice copied from the Anyanja, Europeans, and Mohammedans.

764 News of the death must be sent to the chief, and a messenger goes to his village where the chief and his people sit in the village open space. He carries a fowl in his hand. The 203 present of a single fowl always denotes bad tidings. One of the chief's men, seeing the stranger approach with the single fowl, will jump up and take the bird. He is joined by the others and they go away to the cross-roads where they kill the fowl, pluck it, cook it and eat it. In the meantime, the messenger delivers his news to the chief who will produce from his house about eight yards of white calico; if the deceased has been a much respected

[1] Hugh S. Stannus, 'The life-span of negroes', (*Lancet*, April 11, 1914, p. 1053). [2] Vide infra, p. 386.

643 ivory by his own hunting parties or as a kind of tithe on other hunting expeditions. The ground tusk, i.e. the tusk on the side on which the elephant falls when killed, was the chief's share. In the same way, the hind leg on the ground side of any game animal killed was sent to the chief. He took a share of the spoils of war and most of his people yearly gave him either service in building houses, etc., or kind in the form of food-stuffs, but he enforced no service and levied no tax, except for the making of a new burial place.[1] New settlers in his village were expected to invite him to drink beer made with their first crops.

In return, he always provided cloth to invest the body of the dead. He also made presents at the time of *Unyago*.[2]

A chief's life, therefore, may not be "all beer and skittles," though he consumes a good deal of the former and a kind of skittles[3] was a favorite pastime of one of the Malemyas. A saying embodying this idea was used when pleading for a man who had [538] committed adultery with his chief's wife "one who carries a tortoise (on a string over his back) is likely to get his clothes soiled"; a man has to put up with the troubles his belongings bring him. So a chief must bear with his own people who do wrong.

643 Ample opportunity for exercising such forbearance was provided, since the chief was formerly the adjudicator of all disputes and dispenser of justice in all crimes. The headman 692 did the same in a smaller way but appeal could always be made to the chief. Cases were heard by the chief sitting in council. He and his headmen and elders would assemble in the village open space and here cases were stated, often at great length.

Each party to the case would employ some man well known for his powers of oratory as leading counsel. The speaker for the plaintiff would start proceedings by a recital of all the evidence he could collect. After him would follow innumerable speakers, whether actual witnesses or not, each telling as good a story as he could, and the defendant's case would then be put by his representatives. There was no cross-examination but at the end, a summary was made and judgment given. A chief often took the advice of some one of his old men whom he trusted.[4] The chief received no payment for his services, except in the case of murder; neither did the "counsel" receive anything for their efforts.

674 **Crimes.** Causing the death of a person by witch medicine, *usuni*, was the most heinous [754] crime; a *mwai* ordeal might be held, but if the offense was proved, burning was the punishment which usually followed.

[684] The offense second in gravity was adultery. This might be expiated by payment or by death, according to the circumstances under which it occurred; mutilation was often [696] performed in the case of a chief's wife. All death sentences with the exception of those

[1] Vide supra, p. 244. [2] Vide supra, pp. 248, 264. [3] Vide infra, p. 360.

[4] The old Malemya (Nahitumbo) has some very fine men among his counselors. Kuntupa and Chiupile, the latter renowned for his oratory, were his chief advisers in legal matters. Ndabka, a slave, was his mentor in all personal and family affairs, while Chekasengo was in charge of all ceremonies and served with his assistant, Mpanje, as high priest on all occasions of intercession. Others acted as his emissaries, such as Mkopiti who always went on any missions to the Angoni, among whom he was known as Ndonjira.

3: Stannus D-5 (ca. 1912) 1922 FT7 Yao FT7

and uncles as well. I am inclined to believe that the words primarily refer to a person's maternal and paternal relatives whose children bear the relationship of *wanke* to the person. A strange point, however, crops up, namely, that the paternal aunts are called *atati* (*atati wakungwe*) and their husbands *atati* again. 601

An elder brother is *akulu*, his younger brother *mpunkwe*, a sister *mlumbu*, *mlumbu wanandi* and *mlumbu wakulungwe*, younger and elder sister.

Disease. Apart from old age, the native recognises in all illness and death the hand of an enemy or the result of transgression of some custom: some one has made medicine against him, or he or some one else has broken a custom founded on superstition which is visited on his head. These ideas are so deeply rooted in the native mind that it is with difficulty any appropriate treatment will be received. They rely, rather, on some medicine-man to cure them by medicine more powerful than that made against them. Even an ordinary accident or an attack of pneumonia is accounted for in this way. 753 754 164

The names given in speaking of sicknesses are, of course, applied rather to symptoms, but in some cases where the symptom named is pathognomic of a disease, the word practically stands for the disease. The word used may imply the supposed cause or refer to a resemblance to some object, or again simply state the part affected; thus *chitumbo* (the belly) meaning stomach ache, *mcso* (eyes), conjunctivitis, etc.

The following words most of which are found in the Reverend Dr. Hetherwick's *Yao Language*, give some idea of the Yao native's conception of disease. The sense which the above authority gives is not always quite the same as I would venture to give. I shall not enter into the question of the diseases as such but only in so far as they bear on customs, etc.

The word *chiluele* signifies any disease or illness; *chitopa* and *chipindupindu* refer to epidemic diseases; the former refers to a disease of fowls and dogs characterised by wheezing and hence is occasionally used for bronchitis in man. *Chipindupindu* refers to a series of deaths from a cause unknown to the natives. The word *chaola*, which Hetherwick gives as meaning a plague, rather means arrow poison, I think. 164 753 192

Chombola: a liver disease of fowls.

Chipage: a congenital deformity of any kind (*kupagwa* = to be born with).

Chitweeime: a patch of white hair on the scalp of congenital origin.

Chisiwani (a cousin): the word used for a birth-mark or freckle; helical fistula is also included. Children examine each other to see how many "cousins" each has; anyone with none is made fun of.

Chindundumuli (*lundumula* = a big lump): a hunchback.

Chiwalula (*ku-walula* = to split): a "splitting" headache, or more commonly, medicine by means of which the possessor can inflict pain or death.

Ching'alang'ala: a localised pain in the head.

Chiyungusyungu: giddiness.

3: Stannus D-5 (ca. 1912) 1922 FT7 Yao FT7

Strophanthus is specially reserved for poisoning arrows and it is doubtful if it is ever given by mouth; *Kombe* is the name used in this country, but there are two species of strophanthus in Nyasaland, *Strophanthus kombe* and *Strophanthus courmonti*. The seeds and bark are used and, less commonly, the root. They are mixed with the roots of a shrub called *Nchazimba*, pounded together and boiled, and the liquid used to anoint the arrows. The use of poisoned arrows is a Manyanja custom adopted to some extent by the Yao. 137 278 [107]

A number of poisons are also employed in catching fish, *Ngunga* and *Mtuta* being the most common, also *Kamsimbile Ngochi* (*Nkodzi*, Chin.), and *Chinyenye*. [226]

Witchcraft. In my article on the Anyanja,[1] reference is made to witchcraft and *mfiti*. Beside the Nyanja *mfiti* or the Yao *masuwi*, all tribes as far as I know in Nyasaland have firmly fixed among their beliefs, the conception of the supernatural human-flesh eater. It is a little difficult to define the term *mfiti* or *masuwi*, as it has come to have the somewhat generalised sense of one who practices witchcraft, but the original meaning is defined by Scott,[2] a person who has acquired the knowledge of occult medicine by which he can kill his fellow men; "what makes the power so dreaded is not that the *mfiti* exercises this power for reasons of spite but (as is supposed), to eat the body of his victim." It is at once interesting to note that the word *mfiti* does not belong, according to Scott, to the personal class of nouns but to the *yo-as* class, which seems to imply that they believe a *mfiti* to be something outside the idea of a person. Among the Anyanja in Zomba district, however, the word belongs to the first class of nouns (the personal class) as also does *masuwi* in Chiyao. 754

The natives believe that any man in a village may be a *mfiti* or it might be more correct to say, is capable of changing into a *mfiti*. *Ufiti* is the state of being a *mfiti*; in Chiyao, *usuwi*.

As I have pointed out under *Diseases*, practically all illness and death are thought to be due to the machinations of some person or persons. The inciting motive which may cause a man to compass the death of another may be spite, revenge, etc., or the desires of *usuwi*. Until recent years, when the Government legislated to put down witchcraft, the charges of *usuwi* were everyday occurrences. Whether or not the prevalence of the idea of cannibalism has any substance in correspondingly frequent practice has never been and now probably never will be surely proved. Duff Macdonald believes it to be so.[3] It is true that native graves have been and are still rifled and that the graves of some Europeans have been so opened in the past, as I have learned from eyewitnesses. It seems probable that the graves were tampered with by natives with the object of removing the human remains, possibly to be eaten or to obtain portions of the body to use as charms. Mr. L. T. Moggridge,

[1] 'Notes on some tribes of British Central Africa,' op. cit., p. 202.
[2] Op. cit., p. 245.
[3] *Africana*, op. cit., vol. 2, p. 213-214.

754 Resident Magistrate at Blantyre, told me of a case where the grave of a well-known European hunter was opened and his trigger finger removed, the reason being obvious. The same thing is said to have occurred in regard to the heart of a brave man. In the former case the finger was probably worn as a charm; in the latter, the heart partly eaten and partly made into medicine. I have found human fingers and skulls among the outfits of witch-doctors. Such practices seem akin to those of cannibalistic societies found in other parts of Africa.

754 The natives insist that usuzi are banded together in some sort of society. There are numerous discrepancies in the evidence brought forward about usuzi, but such would necessarily arise and they do not, therefore, disprove the general belief in the actuality of usuzi. Be that as it may, it seems probable that though there may be little or no cannibalism at the present day, the beliefs about usuzi have arisen in consequence of common cannibalistic practices in the past. There are individual cases of cannibalism well known and one has only to call to mind that of Kamtukule of Malemya's village. This man more or less openly killed and ate a number of people. On one occasion after a fight, he was seen looking over the dead bodies of the slain foes and in answer to an enquirer, he denied that he wanted any spoils but said he was just marking the bodies, "that would be his share." Later on, his own son, who tells the story, brought an Angoni man into the village who wished to settle under Malemya. It was evening, so he was introduced into his father's (Kamtukule's) house where Kamtukule gave him food and later a mat on which to sleep, the son meanwhile having gone to a beer drinking. In the morning, he returned to take his Angoni friend to the chief, but his father said he had gone away. Entering the hut, however, the son came upon the Angoni's snuff-box, and said to his father, "No Angoni would go away and leave his snuff-box." But the father said, "Well, he has gone." The lad being suspicious again went into the hut and found the place where the Angoni had been sleeping drenched with blood. Going out again, he noticed blood dripping through the bottom of Kamtukule's grain-store and looking inside, he found the body.

This man Kamtukule was a great friend of the reigning Malemya's headwife, Kung'ando; after the death of Malemya and after his wives had passed to the present Malemya, circumstances arose in the village which cast suspicion on Kamtukule and the woman. One of two brothers was ill and, it appeared afterwards, that the woman had said to Kamtukule, "Won't you finish him off?" It is supposed that Kamtukule thought she meant the brother who was not sick; for it so happened that both died the same night. It was supposed they were killed in order that Kamtukule and the woman, his friend, might eat them. Malemya had the woman turned out of the village. She now lives near Zomba and has once come under my care. The man, who was also turned out, took up his abode near a highway where he is reported to have killed several Angoni porters whom he said he preferred, because "being travellers far away from their homes, no one would bother about them."

3: Stannus D-5 (ca. 1912) 1922 FT7 Yao FT7

The father of one of my servants helped to clear out the remains of a body from his grain store on one occasion and shortly afterwards, it is supposed that his own sons who had said they could not allow it to go on any longer, employed some one to kill him, as he was found, one day, with his head smashed in. There are, I believe, a number of similar cases known. 266

A person is supposed to gain the powers of *usawi* by procuring medicine from some one willing to sell his secrets at a price, and by performing certain rites usually connected with his method of bathing. It is said that "such and such a one takes his bath on the top of an ant hill" or "on the roof of his house by moonlight." The usual initiation into *usawi* is a long business, the individual being successively initiated into all the various practices of *uhewa*, the supernatural. Medicines are made from a still-born child, from various plants, from the hyaena, etc., and used for preparing the individual in the new science. He is introduced to the hyaena, the fox, etc. It is also asserted that a man may acquire supernatural powers by having sexual intercourse with a near relative, a sister or mother. I have had pointed out to me an old man who is said to have wished thus to acquire power but the women refused and he has been a laughing-stock ever since. 754 575 [835]

On one occasion, a man related to me the pathetic life story of his attempt to find his favorite sister who, like himself, had been taken away to the coast as a slave. In desperation he has adopted the above procedure to try to gain supernatural powers to help him but without result. It would therefore seem to be a method not particularly associated with *usawi*.

The *mawi* is supposed to bring about the death of his victim not by administering poison or other such direct means, but by the more subtle mode of making medicine "against" him. When the victim has succumbed and is in due course buried, the *mawi* arrives at the grave to secure that for which he has been working. To the *mawi* is attributed the power of making himself invisible, and of taking the form of an animal; owing to the carrion-eating habits of the hyaena, this animal form is most commonly taken. Other animal forms which are associated with the *mawi* are the leopard, the fox, and the owl, all night-going animals. The Yao say, "The cry of the fox (jackal) is heard at night because he associates with *usawi* doings." 754 [825]

Arrived at the grave after sunset, the *mawi* blows his horn, the horn of a small antelope, to call his brethren; a fire with a blue flame is made by the grave and around it they dance, or the grave may be illuminated by blue flame without a visible fire. The *mawi* calls upon the deceased to rise from the grave, addressing him by the name he bore before he was initiated, i.e. his child-name. Obeying the summons, the dead man rises to the surface of the ground, though how he comes out is not quite clear — "the hole may be ever so small." The risen dead is then killed again by magic medicine and his body divided to be eaten by the congregation of *usawi*. It is said that the skull is made into a gourd, the eyes are used as beads, and the ribs formed into a girdle. [266]

754 A *masuwi* may be met with under different circumstances. An educated native told me of his experience one night when riding a bicycle back to a township where he was employed. Coming along a smooth-hoed path with his lamp alight, he became aware of the presence of something in the bush in front and at the side of him. Suddenly his lamp was smashed and he was left in darkness, while something pushed him over so hard that he fell off his cycle. Picking himself up, he started to wheel his cycle on, when there appeared on the path in front, figures who, rubbing their hands together to produce a phosphorescent glow, held them up in front of the boy's face. He was, however, not molested further, and coming to a group of huts he knew, he went in and made inquiries as to the cause of his experiences and was promptly told that there was a man living in a hut near the spot on the path where they had occurred who was supposed to be *masuwi*. Such a story is given for what it is worth. The boy was about twenty-two years old, a highly educated native with an intelligent appreciation of the worth of superstition.

Some *wasuwi* demonstrations can have no object but to strike terror and keep up the prestige of the *masuwi* class. Mr. Moggridge wrote me, "A boy of mine was certainly attacked and squeezed about the neck by a man whom he described as naked, huge, and slightly luminous, on the road at the back of my house in Blantyre. The boy was strolling up and down in the dusk and had nothing about him to provoke robbery; he was almost choked before he managed to let out a yell which determined his assailant to let him go. He was not a local boy and no theory of personal spite was supportable. I thought and still think that the motive was to show that even the Resident's servant twenty yards from the Resident's house was not safe from *usuwi*." It seems possible that some natives with intent to rob had pretended to be *wasuwi* but recognising that their victim was likely to cause trouble, they went no further.

[824] It is said that the phosphorescence is produced by rubbing in the hands two vegetable substances from local trees and that this is the method the *wasuwi* adopt to announce their presence.

754 **Poison Ordeal.** As I have said above, when anyone sickens or dies, the illness or death
-695 is likely to be considered the work of some one who is *masuwi*, and action will be taken by the relatives to find him out. The proceedings in such a case where witchcraft is suspected will now be briefly sketched; though I give an account of a case from beginning to end as if it occurred at the present time, it must be understood that the giving of *muwi*, the ordeal poison, is now much less common than formerly. A man becomes ill in some village and does not get better, so the caster-of-lots is consulted. The sick man's relatives or friends go to the lot-caster and approach the subject indirectly by asking him his advice about a number of imaginary cases; they may say, "Things have been stolen from our house." The lots are cast and the caster replies, "No, you have not come to see me about that." This may go on for hours before the facts of the case proper are mentioned to him. Finally, they tell him that one of their relatives is ill in the village, the lots are consulted and advice is given

[787]

3: Stannus D-5 (ca. 1912) 1922 FT7 Yao FT7

as to procuring medicine for him from a medicine-man. If the caster of lots is suspicious that some one has caused the illness, he will at the same time add, "Let so and so pray," mentioning the name of the man whom he suspects. Following the advice given, the medicine-man is consulted. He promises to get medicine for the sick man and goes into the forest to search for it. Having returned, he prepares his decoctions and having first partaken of a little himself, he gives it to his patient with further instructions. The friends of the sick man having returned to the village, indirectly ask the man on whom suspicion has been cast to pray for the sick man saying, "He is covered by some spirit." The man prays, sometimes using *mbepesi* and beginning *chondel chondel* "please! please!" and goes on to ask *Mhungu* to take away the spirit which has covered the sick man, adding that he himself is innocent of any ill doing against the man and that any grudge he may have had against him is now forgotten.

If the sick man recovers, well and good, but should he die, there is more to be done. The morning following the burial, the relatives go to the chief and in answer to his inquiry of what they are going to do, they say they must again consult the caster-of-lots. They will choose some one who lives a long way off and is not cognisant of the death of their relative: those who go to him have not been shaved after the funeral. Much the same business is gone through as on the first occasion but, in the end, the caster-of-lots is told that they suspect some one unknown to have brought about the death of their relative. The names of all the possible persons are given, the lots cast in each case and, eventually, one is picked out as the guilty man; the caster-of-lots saying, "If I am not telling the truth, you can test my words by giving *mwai* (ordeal poison) to a fowl; if it does not die, come back and break up all my properties."

He may have gained information from his lots that the suspect is a man of power gained by some special rite, e.g. the midnight bath on the ant hill, in which case he will insist that the fowl poison-ordeal must take place on an ant hill or he will give other specific instructions. On the way back, the relatives will buy two fowls; *mwai* will be prepared by a boy who has not passed through his initiation ceremonies, and two of the party will be chosen as pleaders, one for the deceased, the other for the accused. One fowl is then selected to represent the accused and the poison administered according to the conditions laid down by the lot-thrower, while the two pleaders give injunctions to it, one saying, "You are guilty; you shall die"; the other, "You are innocent and you shall show your innocence by vomiting the poison and recovering." If the fowl dies, a third man cuts off its head, saying, "I am the burier of the dead." *Mwai* is then administered to the second fowl to ascertain whether any other persons are involved. The head of the first fowl is singed, stuck on a stick and carried back with the party towards their village. A little way outside, they halt in the bush, and send word to the headman that they are returning. He then comes out privately to see them, asking what has happened, and is told all the events in sequence.

3: Stannus D-5 (ca. 1912) 1922 FT7 Yao FT7

754
695

One of the group is chosen to go in the morning and summon some one to appear on behalf of the accused man. He and the headman join the party in the bush when the whole of the case from the beginning of the deceased's illness, is again related, ending with the fowl test and dramatic statement of the name of the accused, whereupon the fowl's head on its stick is planted in the ground opposite to the man who has appeared for him as he squats listening to the story. The man who has been called to defend the accused, though the latter may have no particular claim on his kindness, is in honor bound to do his best. As the fowl's head is planted opposite him, he will shift quickly to one side, protesting the innocence of the accused. All then adjourn to the village to put the case before the chief. One of the men acts as prosecutor, again going through the whole case, calling witnesses and others to aid him in speaking. The accused is then defended by the man chosen for the purpose, assisted by others whom he asks to help him. They may speak for a week or more. The chief decides the case, and the result will be communicated to the defendant by his pleader.

If he is found guilty of causing the death of the deceased, he must pay the fine inflicted or if he has been accused actually of *usuwi*, he may have to undergo, or may offer to undergo, the *mwai* ordeal poison himself or the test may be made with a dog tied to the leg of the accused man. If the ordeal is satisfactory to the defendant, the man claims compensation for wrongful accusation. If he dies with *mwai*, his relatives have to pay compensation for the crime he is thereby shown to have committed.

[692] If either party is dissatisfied with the chief's decision, recourse may be had to a hearing before another chief, the first being very glad to be rid of the case. The second gives judgment quickly. If the case goes on to a poison-ordeal, a day is fixed and the accused is taken out to some spot two or three miles from the village where a hut is built called *ndowe* (place of torture). Accompanied by the two pleaders, he remains here for several days. People from the village come out and attempts are made to make him confess any accomplices; beans are fried over a fire and when very hot are put into the accused's hands and his fists closed over them, or they are put in a cloth which is fastened round the perineum, or bamboo sticks are arranged one on either side of the head and tightened by a string.

The third day, natural undyed bark-cloth is obtained and men go out to fetch the *mwai* poison, two men from each party, the prosecutors and the defendants. One man sent by the prosecutor has actually to take the bark from the tree, while the others look on to see fair play. The bark can only be taken from the east or west side of a tree; it may not be cut with a knife or axe or be pulled off, but must be cut with a stone and allowed to fall; only a piece which falls with the inner surface lying upwards is taken. Any of the party may carry it but they must on no account leave one another. Having returned, they hide the *mwai*.

On the appointed day, the big drum is sounded and a crier goes round saying that everyone who wants to see so and so drink *mwai* must go to the appointed place. Every large

3:Stannus D-5 (ca. 1912) 1922 FT7 Yao FT7

village had its regular place of torture and *mwavi* drinking, two or three miles from the village. Those used by Malemya, the old Zomba chief, may still be seen. 754

A clear way is made two feet broad and fourteen feet long in the bush and here the accused takes up his position attended on either side by the two pleaders, the defending pleader on the right, the prosecuting on the left. Facing east or west or following the directions originally given by the caster-of-lots, that is, taking up the position in which the accused is supposed to take a midnight bath, or practice some rite under a tree or an ant hill, etc., he is given a decoction of *mwavi* to drink from a gourd. This decoction is made on the spot, the bark being pounded up on a stone by one of the prosecutors. The accused must have had no food that day. He then starts to walk up and down the short cleared path with the two men, one on either side of him, the one saying, "Now you have drunk *mwavi*, you shall die as you deserve; you did in So-and-So," the other denying the accusations, saying, "He shall vomit the poison." He is watched by the assembled crowd who note the various symptoms of which vomiting is the first and said to be the most characteristic. After this has gone on for some time, they watch for what is called the *mpompo* which is said to be "a ball of bile formed in the mouth and expelled by vomiting so that it bursts on reaching the ground but not before", followed often by a second ball, twenty minutes later. Should this be expelled, recovery may be expected, foreshadowed by clearing of the vision. If he recovers, he is indeed a wonderful man and is hailed on all sides. The women trill with their tongues and shout, and he is carried back in triumph; the defending pleader will swagger about and demand anything he wants for his client. 695

A fatal termination is characterised by little and non-forcible vomiting. Purging is common but said to be painless. Vision is affected and as time goes on, the spectators ask what he can see, "Do you see that over there?" indicating a hill. If he makes mistakes, then they say, "Ah, he is going to die!"

The poison may not take full effect for three or four hours. The end is ushered in by a last stage when the legs become weak; he staggers, then unable to stand any longer, falls to the ground dead, execrated by the onlookers who rush in and hurl stones upon the body, crushing it. The relatives take the mangled corpse and lay it on logs covered with grass in the bush. No other covering is permitted. It may be placed in a tree by people acting as *nsilo*. Burial is forbidden. [766]

In some cases *mwavi* used to be burned, not being given the chance of the poison trial. This took place at a recognised spot like *ndowe*. The last man to be burned by Malemya was Mtulula in 1892. Burning was also a punishment in some bad cases of murder. Such was the fate of Chingale. The man was put in a slave-stick, a pile of logs was built round him and then set on fire. [683]

Witch-finder. In addition to ordeal poison, another method of discovering a *mwavi* is by "smelling out." If a number of people have died in a certain village, the inhabitants may begin to think that there is a *mwavi* among them, and procure the services of a *mbianhla*. 754 695 791

3: Stannus D-5 (ca. 1912) 1922 FT7 Yao FT7

754 695 791

Mbiashila is a Chinyanja word from *ku-bisa*, "to hide," referring to his custom of hiding in the village; the practice is originally Mang'anja, since adopted by the Yao. *Mbiashila* is often a woman and may be young.[1] She comes to stay in the village unknown to the people, lives in a watch house in the gardens and is said to go about at night when she is able to summon *wusui* persons from their houses. The fee for her services is paid beforehand. Later, the villagers are assembled and going round the company holding out flour in her hand, she calls upon So-and-So as the guilty man saying, "This is his 'night-name.'" The villagers all answer, "There is no one of that name in the village." She then goes round again and throwing the flour over the accused, utters his ordinary name and runs off into the bush, not to appear again. The accused may then offer to take *wusui* (ordeal poison) to prove his innocence or if it is a case of illness only and not death, he may be treated by a medicine man, the process being called *ku-lopolola*, "to take evil things out of."

A *wusui* man is sometimes said to renounce his old practices and may then be received into the company of *mbiashila*. A famous *mbiashila* near Zomba affirms that he used to be *wusui*. The mode of action of *mbiashila* varies greatly with different men; for some the ceremony is quite a minor matter; in other cases, it is an important affair.

Witch-destroyer. Where death is suspected to have resulted from *wusui*, steps may be taken immediately to catch and kill the *wusui*. For this purpose, the help of the *wundu juaseketela* is sought. *Ku-seketela* means "to break off the end of a stick"; it appears to be both a Chinyanja and a Chiyao word. The word refers to the practice of the professional witch-killer who is supposed to run a stick through the anus up the bowel of his victim and then break it off, leaving part inside. The *juaseketela* having been informed of the approaching funeral hides in the bush near the graveyard and watches the interment. After everyone has gone, he is free to put in operation that for which he has been called. The following *wudus operandi* is related of a celebrated *wundu juaseketela* called Angoni of Zomba. The water in which the corpse had been first washed was obtained and put in an earthenware dish. He also provided himself with a gourd containing medicines and some stones, and another gourd filled with poison made from crocodile gall to anoint the *seketela* sticks. He also had a small antelope's horn containing medicine which when smeared on the head rendered him invisible, together with the stalks of a species of millet called *mbulus* which sheds its grains at a touch, and a whistle made from the horn of a small antelope, the *ortbi*.

So provided, he proceeded to the grave, around which he drew a ring with medicine contained in still another horn. Within this circle, all was safe. This was followed by a square immediately around the grave with a stone from the gourd placed at each side, north, south, east and west. The plate of water was placed on top of the grave. The *wundu juaseketela* then anointed himself with the medicine which made him invisible to the *wusui*

[1] Cf. Scott, op. cit., p. 288.

3: Stannus D-5 (ca. 1912) 1922 FT7 Yao FT7

and sitting within the circle, he blew his whistle which was irresistible to the *mwosi* man who was then induced to come out of his house. When he had reached the grave, the water was sprinkled over him by the *juaseketela* with the millet stalk from the dish on the grave, or he was struck with the gnu's tail; in either case, he fell to the ground senseless. He was then ready to be dealt with. The *seketela* sticks, small bamboos filled with crocodile poison, were pushed up the anus and broken off to liberate the poison. Sticks might also be inserted behind the ear or in various other spots. The *mwosi* was then beaten to wake him up; he ran off to his own village and there, a little later, he sickened and died, telling no one the cause. After death, the *awilo* when preparing the corpse of the hitherto unsuspected *mwosi*, might find the end of the stick projecting from the anus or see the punctures elsewhere with the medicine adhering to them, and the man was revealed in his true colors. 754 695 791

At Mtwiche's village, there was a man called Liunga who professed to be able to extract the poison injected by the *juaseketela* by causing his patients to undergo a vapor bath and to drink certain decoctions. This man would never reveal the name of anyone who came to him for treatment but would brag that "trade was brisk." The symptoms of the mortal malady caused by the *seketela* are said to be intestinal obstruction with tremendous distention of the abdomen (peritonitis). [184]

Of this same village, a story is told which, if not true, at all events illustrates the sort of thing that is believed. As has been mentioned above, whenever the *juaseketela* blows his little horn, any *wosowi* will hear it and thinking it is one of their band calling, will go to meet him. A woman of this village told how she and her husband were sitting over the fire while the evening meal was cooking, when he suddenly jumped up and said he must go outside for a bit. She remonstrated and asked him to wait for his food, but he hurried off. Later he returned, complaining of feeling very ill; his belly swelled up and he died soon after. It was said that this man was very friendly with a woman named Abibi and that when he went out into the bush, he was heard calling in a low voice, "Is that you, Abibi?" When his body was examined, two punctures were found on the left side of the chest. It was supposed that it was Abibi he expected to meet and with her enjoy a cannibalistic repast, whereas it was a *juaseketela* who had called and killed him.

This brief outline of a case of sickness, suspicion of witchcraft, death, and the consultation with the caster-of-lots, the witch-finder, ordeal poison, death, and the catching of the cannibal witch, has been given as a more or less consecutive story in order that it may be most easily understood. Some further details concerning the lot-caster, witchcraft, etc., must be added.

Lot-casting. Medicine men who cast lots were at one time fairly plentiful and were consulted on many matters, often of small importance from a European point of view. Chief of all were questions of witchcraft. The *modus operandi* varied in different cases. In *wosowi* and other important matters, the medicine man always used the *chisango* (divining in- 787

Witch-medicine. The making of medicine against people has been shown to occupy an essential place in *usuwi*, and it plays an important part in all occultism. So by insensible grades, the ordinary use of drugs in common diseases is reached, though it is probable that very much greater faith is placed in a packet of burnt roots put under the floor of the house than in the efficacy of any concoction taken by mouth. 754 [757]

There is a general belief that by medicine extra ability verging into supernatural power can be acquired. This power in a general sense is represented by the word *ukoma* and a man so possessed is spoken of as *wundu jwa kowala*. The desire for increased power may be a perfectly natural one, such as a desire for influence and popularity as a chief, or on the other hand, the power of *usuwi* may be aimed at, or again, the knowledge of magic medicine for thieving or for any other practice. *Ukoma* is, therefore, a relative matter. The necessary medicine or initiation into the understanding of magic can be purchased from persons already practitioners, the honest herbalist merging by imperceptible degrees into the most criminal witch-doctor. A single practitioner may prescribe a charcoal dressing for an ulcer, exorcise an evil spirit by a vapor bath, sell medicine to enable the buyer to win a case at court, arrange medicine on a pathway to act as a selective love potion, or prescribe a drug to change a man into a lion. 756 787 791

Deserving of special mention are the people who thieve by the aid of medicine which they have either purchased or prepared themselves. Such a man is called *chitaka* and the medicine *sitela wa chitaka*. The active principle of this medicine is said to be prepared from the tail of a hyaena, an animal which is said to be able to enter a house where people are sleeping and kill and carry off the fowls without waking the occupants. The medicine is often carried in a hyaena's tail. The *chitaka* is supposed to approach the house he would rob and chewing some medicine in the mouth, gently blow towards it to put everyone to sleep. The door is supposed to unfasten itself and the thief is free to take what he wishes. He is even said to kill, cook, and eat food in the house while the inmates remain unconscious. A special characteristic of the *chitaka* is that whatever he lays his hands on in the house he must remove, though he does not want it, so that in the morning many unwieldy, useless objects may be found outside the hut. 791 789

There are many other magic medicines. One of these, *luunga*, if introduced into a village, will cause the illness and death of some inmate. Anyone handling the body of the sick man or the corpse after death, sickens and dies until the whole village is wiped out. There is a man serving a life sentence now at the Central Prison, Zomba, who was convicted of having caused the death of many people in a village in Angoniland. He is said cheerfully to have admitted the power of his medicine. 754

Medicine made from a cousin is supposed to be efficacious in various ways. The blood of a cousin is instilled into the ear for otorrhoea. Drinking the water which has been used by a cousin to wash his face relieves intestinal colic. Medicine is made from the hairs of the beard of a cousin or from an *ubilo* and used for chest trouble. 757 605

7: Hetherwick M-5 (ca. 1900) 1902 FT7 Yao FT7

774 they said, "was about to take away their shadows and they would die." In their
123 mind the *liaslu* was allied to the *chiwilili* or picture, and the removal of it to the photographic plate would mean the disease or death of the shadeless body.

As an instance of their faith in the close relationship of the *liaslu* and the
123 picture or shadow, I may relate the following incident. An influential Yao chief
753 on Mount Zomba with whom I was on terms of intimate friendship for years,
774 refused to allow himself to be photographed, fearing the consequences on his life. At last I was able to persuade him to give me a sitting, but on the sole condition that the picture was to be shown to none of his subjects but to be sent out of the country as soon as possible. He feared lest some ill-wisher might use it as a means towards his bewitchment. Some months afterwards the chief became seriously ill, and in the minds of his attendants his illness was attributed to some accident having befallen the photographic plate on which they believed the picture of their chief to be imprinted. If that negative had been broken in England, whither it had been sent, their chief's illness would be accounted for. Accordingly they appealed to the divining oracle, who, however, after consulting the "lota," assured them that the picture was intact, and that in consequence the disease must be ascribed to some other cause.

774 The *liaslu* or soul is recognized as the chief agency in dreams. To dream is,
in the Yao tongue, *kwangamila masalu*, where *masalu* is the plural form of *liaslu*.
787 The *liaslu* is supposed to go out and visit the scenes and persons it dreams about, and in turn is visited by the *masalu* of others, dead or living. Pains in the body on rising from sleep in the morning are usually attributed to such nocturnal visits,
[753] while disease or pains of a severe type are ascribed to castigations by the whips of the *masalu* or more frequently of the witches who prowl around during the night watches.

774 Madness, idiocy and the ravings of delirium or disease are accounted for by a similar agency. The sufferers are *wa masalu*, they of the spirits, and a sudden fit
828 of epilepsy or insanity is described as *gakumwila masalu*, the spirits have seized him. Such persons are usually regarded with awe, as living in close contact with the unseen, but no incantations or enchantments are ever used to expel the spirit in possession. Some native doctors are credited with a knowledge of certain
[755] medicines which they say are effectual in such cases, but their application in no way differs from those employed in treating ordinary types of disease. Idiots and the insane are allowed to wander at will about the village, and only when violent symptoms show themselves as a danger to the community is any physical restraint put upon them.

754 The *masalu* are also recognized as the inspiring agencies in the ravings of the witch detective. This person, usually a woman, is called in to discover who is the guilty agent in cases of mysterious deaths or outbreak of an epidemic at a village. She arrives on the scene and takes up her abode for a few days previous to her actual demonstration. She mixes with the people, learns all the scandal and gossip of the community, and at night prowls about the houses searching for

7: Hetherwick M-5 (ca.1900) 1902 FT7 Yao FT7

evidence. On the appointed day she dances, *kwina mazdu*, to dance the spirits, or *kuwesta*, to rave or prophecy, and in the ravings of the dance she calls out the name of some party who is afterwards accused of being the *mazwi* or witch. Followed by a crowd of excited spectators she dances through the village spear in hand, stopping here and there to dig up charms or medicines which the supposed witch has buried in the ground as the instruments of his occult practices. It is only in cases of supposed special difficulty, or when the magnitude of the supposed crimes demands that special measures be adopted for their detection, that the services of such a witch detective are called in. In ordinary cases these appeals are made to the divining oracle who consults his "lota" as a means of discovering crimes of this nature. 754 [787]

Among the Yaos the human being is believed to be the sole possessor of a *liadu*. I have been unable to discover any trace of a theory that the *liadu* may pass into any animal or inanimate object and thus confer upon it the nature or power of a fetish. Such belief is cherished among the Angoni and Achewa tribes to the westward by Nyasa and the upper Shire River, and the intelligent Yao is aware of this, but he states that among his people no such belief exists. Even charms which have the effect of healing or warding off disease, or of protecting the wearer from war or wild beasts or other danger by land or water, are supposed to possess this power without any idea of their being possessed by a *liadu* or other spirit influence. The nearest approach to such a theory is in the case of certain powerful "doctors" who have obtained special medicine by means of which, at death, they can transform themselves into lions, leopards, crocodiles, etc. Lepers also are sometimes supposed to become hippopotami. But both of these cases must be regarded rather as transmutations of body than transmigrations of soul. 774 [171] [751] 756 775

It will be thus seen that the nature of the human *liadu* is closely allied to that of the *mazdu*, which are the inspiring agents in madness and in the ecstasy of prophecy or incantation. What the origin of these inspiring *mazdu* is, or to whom they belonged when in bodily life, the Yao holds no theory. He is content to accept them as they are, *mazdu ipepe*, "Just *mazdu* and nothing more," as he says. 774 828

It is, however, when we follow the disembodied *liadu* after death and consider its position and power in the other world that we find ourselves in a region of higher spiritual activities. 775

In dreams or in fainting fits the *liadu* leaves the body but only to return to it with the awakening consciousness. At death, however, it leaves its earthly abode never to return. It is now spoken of as having gone to *malanga* or *mlanga*. This word, which lies at the basis of all Yao theories of the place of the soul after death, will be dealt with later on as regards its derivation and connections in the Bantu family of languages. In its actual use it bears two significations.

I. The word *malanga* is in the first instance applied to the human soul or *liadu* after death when it is considered as an inhabitant of the spirit world. Even in life a man, when he meets with any piece of good luck, will be heard to say, "It's my *malanga*," as if his soul had an influence in determining the character of his

2: Mitchell E-5 (1946-1949) 1956 FT7 Yao FT7

613 members goes to an outsider and grumbles to him about the
754 family squabbles[1] and quarrels. The outsider then takes the opportunity of using this squabble to introduce his sorcery into
578 the lineage. The Yao greatly fear backbiting because of their
626 dread of sorcery and none dreads it more than a village headman, a warden of a sorority-group,[2] or a person in the position of having to keep a matrilineage or section together. These people are continually adjuring the women under them—for it is the women who are believed to be the main culprits—not to fight among themselves; and if they do, not to take their complaints to an outsider but to the senior member of the matrilineage. The significance of this in relation to lineage unity is plain enough.

613 Apart from sorcery, strained relationships between members of
578 a matrilineage are believed to be dangerous for other reasons. Malice may adversely affect people who are in mystically danger-
843 ous states. The most common of these states is pregnancy. If
224 a woman has a quarrel with a matrilineage member while she is pregnant she is likely to have a difficult labour. The Yao say 'the womb has heard these bad words'. Another situation where malice or quarrelling will cause difficulties is in hunting. The luck of the chase is capricious and malice may easily bring bad fortune to an otherwise good hunter. For example, a successful hunter once gave each of his two sisters a piece of venison. Each complained that the other had been given the larger piece and quarrelled vehemently about it for weeks. The hunter now found that no game fell into his traps. He went to a diviner who indicated the quarrel of the sisters as the cause of his failure and told the hunter to get them to 'blow water' (*kupesya*). He did this; good relationships were restored and his traps were filled once more.

613 These deleterious effects, like the curse, are connected in some way with the ancestor spirits. This is sometimes expressed quite
578 clearly when a person is called upon to 'blow water'. A
769 mother who wishes to revoke a curse, a woman who wishes to recant her malice towards her matrilineal relative who is suffering
755 in childbirth, or a man whose sister's son is ill supposedly because

[1] This is called *miseri*, which I have translated as 'backbiting'. This idea is extremely important, as we shall see later.

[2] i.e. those men who are responsible for their sisters and their descendants. See p. 145 ff.

2: Mitchell E-5 (1946-1949) 1956 FT7 Yao FT7

of his malice towards him, might equally be called upon to do this. The person makes a statement to the effect that he bears no malice and hopes that the sufferer will be well. For example, a woman in Cikoja village who was called upon to 'blow water' during the labour pains of her mother's younger sister's daughter's daughter,[1] because they had quarrelled over a sifting basket, put some water in her mouth, spat it out and said: 'Those words I spoke: the basket is mine. This is my child. Both are mine. When I spoke and asked my child about it, they were not words to place in my heart, so that to-day we should have to go to the diviner because my child is hitched[2] and be accused because of the sifting basket. These words I push aside. I do not know whether there are other words that we fought about, but if they are these, my daughter's child come out!'[3] Sometimes the ancestors are specifically invoked, '*Conde, conde ŵamasoka* . . .' 'Please, please, O spirits . . .' This is a public confession of the tension within the lineage and it allows the lineage leaders to attempt to straighten out the difficulties, as they did in this case.[4]

These beliefs in mystical dangers of one sort or another which beset the matrilineage as the result of bad feelings within it, have the effect of constraining matrilineage members to maintain peaceable relations among themselves and are, therefore, conducive to maximum solidarity.

It is clear from MacDonald's writings that in earlier times the periodic offerings to the spirits of the ancestors was a valuable way in which the solidarity of the matrilineage was expressed. With the introduction of Islam and Christianity these sacrifices have disappeared. I have not worked in Christian areas long enough to be able to say whether the ancestor cult still persists. In the northern area, however, I can say that the ancestor cult survives as part of the practice of Islam. Periodically, feasts are held in

[1] See the history of the division in Cikoja lineage, pp. 165–6.

[2] *Kukolekwa*, i.e. the child cannot be born.

[3] *Une malôŵegala ciwlo cila cangune. Aju muwanangu. Yosepe yangune. Phunwerenga nikwenya, kumbenya muwanangu, nginiwa malôŵe gakwika kwetima, gati ngaku lelo nikwende kwiciungo cakolekwa muwanangu nikunkamula une ligonga lya ciwlo. Cekgo ngwetaka. Kwalini nagapali gani getuwa kangamile nambo nagagga malôŵe gakwe, cimkula cangu cikopoce.*

[4] I have drawn attention to the cathartic effect of accusations of sorcery and public confession of guilt in a paper, 'A Note on the African Conception of Causality', *The Nyasaland Journal*, v, 2 (July 1952), 57–8.

3: Stannus D-5 (ca. 1912) 1922 FT7 Yao FT7

757 Simple incision is practised for relief of pain or again "medicine" may be introduced into the wound. Such medicine usually consists of charcoal prepared from various vegetable substances. There is no evidence that any active medicinal principles are involved and the most that is attained is probably a certain amount of counter-irritation. For pain, a string is tied tightly round the part; thus for headache one sees a string tied round the head and doubtless some relief is felt when pressure is made on the temples. A man with an abscess of the hand or foot will tie a string round the arm or leg, but I have never seen it so applied as to produce any effect comparable to that of Bier's hyperaemic treatment. By analogy a string may be worn round the chest for pleuritic pain and by limiting movement may be effective. In many cases a charm is attached to the string as an adjuvant.

The use of drugs as such is widespread but I have very little evidence of their efficacy. The methods of administration are various. The vapor bath is often used. Over a pot of water in which have been dropped herbs and stones heated in a fire, the patient squats enveloped in a blanket and is thereby subjected to the action of the medicated steam. This method is also adopted for enuresis. A case which came recently to my notice was the wife of a native hospital dresser who, suffering pain in the abdomen, avoided my ministrations and consulted a female medicine-maker. She was given a vapor bath as above described and after a few moments, the medicine-woman clapped her on the back and told her to rise. The old woman plunged her hands into the pot and brought forth some human hair tied in a piece of calico and a human metacarpal bone. "These are what troubled you," she said — fee £1! This is called *ku-lopiola*, to take evil things out for. [795]

Various powdered barks and leaves are applied to ulcers and appear to have an astringent effect in some cases but the majority seem to go from bad to worse. No other external applications have been observed except one for scabies. Incision of the skin and insertion of "medicine" have been mentioned above.

Large numbers of vegetable products are administered by mouth, always in the form of an infusion or suspension. It is probable that a number of these are really beneficial but I am not able to speak in detail of their effects. Many astringents are undoubtedly used for diarrhoea. Herbs containing oil are used for gonorrhoea.

757 751 Apart from magic medicine dealt with elsewhere and commonly employed for purposes outside disease, charms are used for the prevention and treatment of ordinary diseases and injuries. There are only a few varieties of charms. A vegetable substance, root or stem, may be worn on a string round the part of the body concerned. Thus one sees a couple of little pieces of stick, *ubiji*, on a string tied round the head, round the arm or round the chest for headache, a whitlow or diarrhoea as the case may be. The medicine may be in the form of a preparation, generally charred vegetable substances, and is made into a little packet in leaves and cloth worn most commonly round the neck; it is called *kabwaua*. Such a charm is supposed to be effective against all ills.

3:Stanzus D-5 (ca. 1912) 1922 FT7 Yao FT7

516 731 769

knees and elbows, at intervals swaying their bodies from side to side and clapping their hands. Kasungu then ordered all to go and bathe, men and women separately. As they returned from the stream, rain began to fall.

Intercession on behalf of the sick may be made, especially by anyone who is likely to be accused of causing the illness by witchcraft.[1] The man standing with arms outstretched, downwards and a little in front of his body, the hands supine, takes some water in his mouth and discharges it in a stream on the ground, (probably as a sign of purification of his tongue), and then invoking "all the spirits above," asks that they will intercede to restore health to the sick man and bear witness to his own innocence of any wish to do the sick man injury. *Ku-pepe* is the word meaning to offer sacrifice and prayer. 755 769

Harvesting and hunting are occasions when sacrifices may be offered. It was formerly the custom for the chief to determine the day on which harvesting of millet should begin. On the day appointed, a big drum was beaten in the village and word passed round; then everyone would go down to his garden, gather a head of millet, and bring it back to the village where it was all handed over to the chief's headwife. After drying and threshing, a little of the grain was laid at the grave of an old chief by one of the reigning chief's advisers, the remainder being again distributed to all the people gathered together in the village meeting-place, who ate it raw. After this ceremony, harvesting begin. 769 241 782

In passing through a millet garden, if a child asks his mother to give him some to eat, she plucks a bunch or two and reverently laying one at the foot of a *mavo* tree for the spirits or at the base of some other tree, if she cannot see a *mavo*, she gives the rest to the child.

When a hunting expedition makes its first killing, part of the flesh of the animal is laid at the base of a tree as a thank offering to the spirits and in anticipation of further favors to be conferred. All such offerings are supposed by the natives to be partaken of by the spirits, though they are well aware that they do not actually diminish in quantity. There is an interesting point in this connection: any man who has acted as *nhilo* (undertaker) to some well-known man may appropriate these offerings. In the case of the hunting offering, he will run round the tree, saying, "I am a hyaena, the spirits will not mind me," and will then take part of the flesh-offering and eat it. 782 224

In the same way, a *nhilo* may drink from a grave beer-pot after three days, when the spirits are supposed to have taken what they want.

With the exception of the *mavo* tree above mentioned (*ndima*, Chin.), and possibly another called *nsile-ngumu* (Chin.), which is never used as firewood and which is supposed to be used by *masuí*, I do not think there are any sacred trees properly so-called. Miss Werner supposes that many of the big trees (often a species of *Ficus*) in villages are sacred.[2] The truth is, I believe, simply that a village is made naturally round a big tree which conveniently offers its shade for the village meeting place. The spirits of deceased chiefs may 824 778

[1] Vide supra, p. 307.

[2] The natives of British Central Africa, op. cit., p. 82.

3:Stanner D-5 (ca. 1912) 1922 FT7 Yao FT7

791
789
255

As an example of another kind of intermediary may be mentioned a woman called Binibi Chikanowa, who, though an Anyanja, was well known among the Yao of Zomba. She was consulted on many occasions about the future, about rain, or the prevention of disease. She was a woman of quiet ways and greatly respected; she had no fixed abode but was received everywhere and given food and shelter. She would sometimes disappear from the district and travel to far distant places. A son, born to her when a young woman, was lately a patient under my care, a man of about forty-eight. On one occasion she was consulted about an epidemic of ulcers among the people near Zomba. She asked all the people from the villages to go down to Lake Shirwa and to take a white fowl with them. When they had all collected, she appeared, carrying in each hand a little gourd containing *mbepwi* flour, and a small open basket on her head. She took the fowl in one hand and then proceeded to walk into the water, saying she would have to go to a little hill on an island in the lake called *Chidio Mpiri* and that she would come back in three days. She then walked on into the water and disappeared below its surface. In three days time, she returned to the village and said that the women must give up dancing the *chipondo* dance for twelve months and all would be well.

On other occasions she usually worked along similar lines. Consulted as to whether or not some sick person would recover, she always answered with the same formula, if she thought he would die, "The house is prepared for him and medicine would avail nothing!"

791
828

There are certain other supernatural persons or spirits to which reference must be made. *Chimalo-mawi* has been mentioned above. *Mawawa*, a word which Hetherwick translates as "madness, idiocy,"[1] really refers to the delusions and hallucinations which form part of the perceptions of the insane. The word also has the meaning of obsession, phobia, and intuition; thus the natives say of an ox about to be slaughtered that shows signs of realizing the approaching evil, "it has *mawawa*." On the other hand, they say the hartebeest is a foolish animal that does not know what to do when hunted: "it has *mawawa*, it is a deluded animal." Again, the baboon and the crow "have *mawawa*"; they are possessed of senses or faculties which warn them of the approach of any enemies before they can be seen or heard; they cannot be stalked. In all these cases, the crowd of hallucinatory men pursuing some melancholic, the rats of the delirium tremens patient, and that which appears to warn the crow or the baboon, are all *mawawa* and are, I think, supposed by the natives to have some kind of materialistic form.

791
789

Ndodoka: when the *wasawi*[2] do not wish immediately to devour the body of a deceased person which they have raised from the grave, they cut off the arms and legs at the elbows and knees and insert medicine into the stumps; these living-dead are then compelled by the *wasawi* to live in caves and hollow ant hills during the day and to follow them at night in their travels, "like a herd of goats," to be eaten as required. The *ndodoka* may be heard as they wander along in the night, making sounds like a cat's mew. A woman will

[1] Yao language, op. cit., p. 288. [2] Vide supra, p. 266.

7: Hetherwick M-5 (ca. 1900) 1902 FT7 Yao FT7

774 they said, "was about to take away their shadows and they would die." In their
123 mind the *liseku* was allied to the *ekiwilili* or picture, and the removal of it to the photographic plate would mean the disease or death of the shadeless body.

As an instance of their faith in the close relationship of the *liseku* and the
123 picture or shadow, I may relate the following incident. An influential Yao chief
753 on Mount Zomba with whom I was on terms of intimate friendship for years,
774 refused to allow himself to be photographed, fearing the consequences on his life. At last I was able to persuade him to give me a sitting, but on the sole condition that the picture was to be shown to none of his subjects but to be sent out of the country as soon as possible. He feared lest some ill-wisher might use it as a means towards his bewitchment. Some months afterwards the chief became seriously ill, and in the minds of his attendants his illness was attributed to some accident having befallen the photographic plate on which they believed the picture of their chief to be imprinted. If that negative had been broken in England, whither it had been sent, their chief's illness would be accounted for. Accordingly they appealed to the divining oracle, who, however, after consulting the "lota," assured them that the picture was intact, and that in consequence the disease must be ascribed to some other cause.

774 The *liseku* or soul is recognized as the chief agency in dreams. To dream is,
in the Yao tongue, *kwangamila maseku*, where *maseku* is the plural form of *liseku*.
787 The *liseku* is supposed to go out and visit the scenes and persons it dreams about, and in turn is visited by the *maseku* of others, dead or living. Pains in the body on rising from sleep in the morning are usually attributed to such nocturnal visits,
[753] while disease or pains of a severe type are ascribed to castigations by the whips of the *maseku* or more frequently of the witches who prowl around during the night watches.

774 Madness, idiocy and the ravings of delirium or disease are accounted for by a similar agency. The sufferers are *wa maseku*, they of the spirits, and a sudden fit
828 of epilepsy or insanity is described as *gakumwile maseku*, the spirits have seized him. Such persons are usually regarded with awe, as living in close contact with the unseen, but no incantations or enchantments are ever used to expel the spirit in possession. Some native doctors are credited with a knowledge of certain
[755] medicines which they say are effectual in such cases, but their application in no way differs from those employed in treating ordinary types of disease. Idiots and the insane are allowed to wander at will about the village, and only when violent symptoms show themselves as a danger to the community is any physical restraint put upon them.

The *maseku* are also recognized as the inspiring agencies in the ravings of the
754 witch detective. This person, usually a woman, is called in to discover who is the guilty agent in cases of mysterious deaths or outbreak of an epidemic at a village. She arrives on the scene and takes up her abode for a few days previous to her actual demonstration. She mixes with the people, learns all the scandal and gossip of the community, and at night prowls about the houses searching for

3: Stannus D-5 (ca. 1912) 1922 FT7 Yao FT7

Again, charm medicine may be contained in various articles which are also generally worn round the neck. The teeth and claws of the beasts of prey are so employed, generally arranged in pairs bound together so as to form a crescent and suspended from a string. The teeth of crocodiles, lions, leopards, and the claws of the same beasts and of some large birds of prey are thus employed. The teeth etc., are in themselves charms against injury, probably against what one might call homologous injury. The idea of stuffing them with medicine is probably a secondary consideration, a process of fortification of the charm so that its use comes to have a more powerful influence. It is interesting to see of late years that the native, recognizing the decorative value of these crescent-shaped amulets, has begun to copy them in lead and ivory. A series of these of graduated size is worn as a necklace by women. 751 757 825

When a medicine-man is consulted, part payment is made in advance, "payment to go and dig medicine (roots)." The rest of the payment is made when the cure is effected. Should a patient not be satisfied with his treatment and wish to consult some other medicine-man, he pays to the first a quarter of the fee he would have paid if his cure had been effected; this is called "paying him to get his medicine away." Unless this is done, should he recover later, he will be liable to claims for full fees from all of the medicine-men he has consulted; each will say his own medicine has gone on acting and has effected the cure. A medicine-man may take a case he is treating into his own house. 756

In prescribing medicine, very particular instructions are given with an embargo on certain things which may or may not have some use and significance. A medicine-man in 1891 at Malemya's, who inoculated every one in the forehead with bullet proof medicine, said that no one must step across a *mwiri* (pestle for pounding grain), and no one must eat the leaves of the sweet potato.

A medicine-man always partakes of part of the decoction he is giving to a patient to show that it is harmless; I think these preparations are mostly inactive. I should hate to sample all the castor oil I have prescribed, though many natives have had suspicions about me when I have not done so.

Poisons. Though there are a large number of species in this country, both vegetable and animal, from which poison might be extracted, those that have gained any reputation among natives and have come under my observation are but few in number. *Mwai* (*Mwabi* Chin.) "the ordeal poison," is the bark of *Erythrophloeum guineaense*. The natives distinguish two varieties of *mwai*, the two trees differing slightly in leaf, flower and bark; *mwai* is the *Erythrophloeum guineaense*, the second variety known as *mperanjilu* is doubtless an allied species. *Mwai* is the poison employed in the poison ordeal.[1] It is administered in a poisonous dose as a decoction of the bark, recovery or otherwise depending on whether or not the poison is voided by vomiting. Natives give as the symptoms headache, giddiness, disturbances of vision, vomiting and purging, with slowing of heart beat. *Mper-* 137 278 [695]

[1] Vide infra, p. 296.

3: Stannus D-5 (ca. 1912) 1922 FT7 Yao FT7

Witch-medicine. The making of medicine against people has been shown to occupy an essential place in *usawi*, and it plays an important part in all occultism. So by insensible grades, the ordinary use of drugs in common diseases is reached, though it is probable that very much greater faith is placed in a packet of burnt roots put under the floor of the house than in the efficacy of any concoction taken by mouth. 754 [757]

There is a general belief that by medicine extra ability verging into supernatural power can be acquired. This power in a general sense is represented by the word *ukoma* and a man so possessed is spoken of as *mundu jua komala*. The desire for increased power may be a perfectly natural one, such as a desire for influence and popularity as a chief, or on the other hand, the power of *usawi* may be aimed at, or again, the knowledge of magic medicine for thieving or for any other practice. *Ukoma* is, therefore, a relative matter. The necessary medicine or initiation into the understanding of magic can be purchased from persons already practitioners, the honest herbalist merging by imperceptible degrees into the most criminal witch-doctor. A single practitioner may prescribe a charcoal dressing for an ulcer, exorcise an evil spirit by a vapor bath, sell medicine to enable the buyer to win a case at court, arrange medicine on a pathway to act as a selective love potion, or prescribe a drug to change a man into a lion. 756 787 791

Deserving of special mention are the people who thieve by the aid of medicine which they have either purchased or prepared themselves. Such a man is called *chitaka* and the medicine *mtela wa chitaka*. The active principle of this medicine is said to be prepared from the tail of a hyaena, an animal which is said to be able to enter a house where people are sleeping and kill and carry off the fowls without waking the occupants. The medicine is often carried in a hyaena's tail. The *chitaka* is supposed to approach the house he would rob and chewing some medicine in the mouth, gently blow towards it to put everyone to sleep. The door is supposed to unfasten itself and the thief is free to take what he wishes. He is even said to kill, cook, and eat food in the house while the inmates remain unconscious. A special characteristic of the *chitaka* is that whatever he lays his hands on in the house he must remove, though he does not want it, so that in the morning many unwieldy, useless objects may be found outside the hut. 791 789

There are many other magic medicines. One of these, *luunga*, if introduced into a village, will cause the illness and death of some inmate. Anyone handling the body of the sick man or the corpse after death, sickens and dies until the whole village is wiped out. There is a man serving a life sentence now at the Central Prison, Zomba, who was convicted of having caused the death of many people in a village in Angoniland. He is said cheerfully to have admitted the power of his medicine. 754

Medicine made from a cousin is supposed to be efficacious in various ways. The blood of a cousin is instilled into the ear for otorrhoea. Drinking the water which has been used by a cousin to wash his face relieves intestinal colic. Medicine is made from the hairs of the beard of a cousin or from an *mbile* and used for chest trouble. 757 605

7: Hetherwick M-5 (ca.1900) 1902 FT7 Yao FT7

evidence. On the appointed day she dances, *kwyina masoka*, to dance the spirits, or *kwewerela*, to rave or prophecy, and in the ravings of the dance she calls out the name of some party who is afterwards accused of being the *mawi* or witch. Followed by a crowd of excited spectators she dances through the village spear in hand, stopping here and there to dig up charms or medicines which the supposed witch has buried in the ground as the instruments of his occult practices. It is only in cases of supposed special difficulty, or when the magnitude of the supposed crimes demands that special measures be adopted for their detection, that the services of such a witch detective are called in. In ordinary cases these appeals are made to the divining oracle who consults his "lota" as a means of discovering crimes of this nature. 754 [787]

Among the Yaos the human being is believed to be the sole possessor of a *lisoka*. I have been unable to discover any trace of a theory that the *lisoka* may pass into any animal or inanimate object and thus confer upon it the nature or power of a fetish. Such belief is cherished among the Angoni and Achowa tribes to the westward by Nyasa and the upper Shire River, and the intelligent Yao is aware of this, but he states that among his people no such belief exists. Even charms which have the effect of healing or warding off disease, or of protecting the wearer from war or wild beasts or other danger by land or water, are supposed to possess this power without any idea of their being possessed by a *lisoka* or other spirit influence. The nearest approach to such a theory is in the case of certain powerful "doctors" who have obtained special medicine by means of which, at death, they can transform themselves into lions, leopards, crocodiles, etc. Lepers also are sometimes supposed to become hippopotami. But both of these cases must be regarded rather as transmutations of body than transmigrations of soul. 774 [171] [751] 756 775

It will be thus seen that the nature of the human *lisoka* is closely allied to that of the *masoka*, which are the inspiring agents in madness and in the ecstasy of prophecy or incantation. What the origin of these inspiring *masoka* is, or to whom they belonged when in bodily life, the Yao holds no theory. He is content to accept them as they are, *masoka igoyo*, "Just *masoka* and nothing more," as he says. 774 828

It is, however, when we follow the disembodied *lisoka* after death and consider its position and power in the other world that we find ourselves in a region of higher spiritual activities. 775

In dreams or in fainting fits the *lisoka* leaves the body but only to return to it with the awakening consciousness. At death, however, it leaves its earthly abode never to return. It is now spoken of as having gone to *mulungu* or *mlungu*. This word, which lies at the basis of all Yao theories of the place of the soul after death, will be dealt with later on as regards its derivation and connections in the Bantu family of languages. In its actual use it bears two significations.

I. The word *mulungu* is in the first instance applied to the human soul or *lisoka* after death when it is considered as an inhabitant of the spirit world. Even in life a man, when he meets with any piece of good luck, will be heard to say, "It's my *mulungu*," as if his soul had an influence in determining the character of his

10: Sanderson D-5 (ca. 1920)1922 FT7 Yao FT7

796 THE WHOLE VILLAGE IS THOROUGHLY "SPRING-CLEANED", ALL RUBBISH
[364] is swept up, the ground round the houses is hoed clean, and the interiors remudded. Ceremonial beer is brewed by the head-wife of the chief, and after this has been drunk the ashes of the fire used in the brewing are carefully collected and taken to a *malehano* ("cross-roads," or "diverging of paths") where they are deposited.
[783] The chief, as representative of his people, bathes in special medicated water, a
[824] decoction made from the bark of *ng'wenyu* and *mbawa*, and the root of *mpingo*.
[622] This completes the ordinary annual ceremony, at which new fire is not made.

On certain special occasions a more elaborate ritual is carried out; such occasions are the death of a chief, a threatened epidemic of infectious disease, a murder (especially by shooting) and the frequent occurrence of quarrels in the village.

In such circumstances, in addition to the ordinary *pyajila* ceremony described above, the porridge sticks of the whole village are renewed and all fires extinguished. The discarded sticks and all ashes of the old fires are carried to the meeting of paths, where the former are stuck upright in the ground and the ashes piled together;
[372] this is done in procession, all the people taking part. On their return to the village new fire is made by friction by either the chief or his younger brother—usually the latter; fire procured in any other way would nullify the proceedings. Finally
[783] all the people bathe in the medicated water used only by the chief at the ordinary ceremony.

751 In addition to this special form of the *pyajila* ceremony, another rite is sometimes
796 performed after the occurrence of a murder or as prophylactic against the spread of epidemic disease. The doctor first makes a kind of trough (*lukungwa*) from the bark of *mtondowoko* or *mpapa*, and procures a *chichiliko* (or *chipengule*) basket—used as a strainer in salt-making. Having collected his medicines he proceeds to the bank of the stream near the usual bathing-place of the village and digs a shallow hole, in which he places the basket; in this he puts the leaves of a certain thorny shrub and covers the whole with the trough, which is banked up with earth so as to be perfectly firm. He then puts his "medicines" into the trough; these are, first, the head of an iron hammer and a piece of slag, both from a smelting furnace. On top of these he puts pieces of the root of a certain tree which has many and particularly sharp thorns, and bits of bark from two trees peculiar for having very straight stems. Having distributed these evenly along the floor of the trough, he fills it with water and then proceeds to construct an arch over the end of the trough furthest from the stream. Two long poles, cut from a kind of tree particularly rich in sap, are planted in the ground, one at each side of the trough and close to it; these are bent over towards each other, and fastened together by means of a strip of their own bark. A bamboo is now planted alongside each, and similarly tied to its fellow. During all these preparations and throughout the ceremony it is essential that the doctor has no knots in any part of his clothing.

The preparations are now complete, and when all the fires in the village have been extinguished the people go in procession to the spot where the doctor awaits them. All must be poorly clad and must have no metal about them.

[622] The chief opens the ceremony. He steps into the trough and taking some of the medicated water therefrom in his hands he rinses his mouth with it. He then
[769] offers a prayer to the spirits of his ancestors, first stating the emergency and detailing the measures which are to be taken to deal with it (new fires, sweeping, discard of porridge-sticks and shaving). The prayer over, he splashes the water in the trough over his body and passes through the arch, first throwing some gift (beads or, in more modern times, money) into the trough. These gifts, presumably
[756] intended as an offering to the spirits, are the perquisites of the doctor, and everybody is supposed to contribute in turn.

3: Stannus D-5 (ca. 1912) 1922 FT7 Yao FT7

Other hypothetical diseases which are caused by disobedience to custom are mentioned under various other headings. *Kasipa:* a disease generally characterised by ulceration of the legs but in some cases by pains in the back, or loosely used for a variety of symptoms, is said to be caused by the entry into the body of a worm which lives in water-pools. This worm which I have had identified is a gordian worm and not known to be parasitic in man. *Luasi:* When a man kills another in battle, he will slit open the belly of his victim; otherwise he believes he will sicken with *luasi* and his own belly will swell up like that of the corpse when putrefaction sets in. He is supposed also to hunger after more killing and blood. *Likango* is the name of a supposed disease which kills off one child after another in a family when they are about six months old. Congenital syphilis naturally suggests itself but I have never been able to verify this idea. *Likango lya kututa:* a supposed disease which causes the death of the first child when the second is born, the second when the third is born and so on, whatever the intervals between the births. Each child is said to push (*ku-tula*) the previous one out of this world. Under these circumstances the disease is ascribed to something wrong with the mother or father and they are examined by a medicine-woman or medicine-man, and any carunculae or an external pile found will be cut away.

If a snake inflicts two bites, the case will prove fatal. If a crocodile emits a grunting sound when seizing its victim, though he escape he will certainly die.

Treatment of disease. Of surgical treatment there is very little to be noted. Nothing in the way of operation is performed with the exception of circumcision (see *Lupanda*).

An abscess is allowed to burst, the smallest tumor is left untouched, but accessory digits which are not rare, attached only by a fine pedicle, are snipped off.

The natives cannot extract teeth. They are incapable of rendering any assistance in cases of difficult labor. Dislocations are not recognised as such, but fractures are treated by the application of wooden sticks placed at intervals round the circumference of the limb parallel to it and held in position by twisted pieces of bark string (Pl. XXII, fig. 3). The principle of the tourniquet appears to be unknown.

The only instruments used consist of a small knife for incision, a cupping-horn, and a primitive form of funnel for administering enemata (Pl. XXII, figs. 1, 2, 4). The knife has a triangular blade with a stem which is commonly twisted at one of the corners. The knife is used for wet-cupping, tatooing, and circumcision (Pl. XXII, fig. 2). The cupping-horn is a small horn of a calf. The apex is pierced and after application to the part, suction is made with the mouth and then the hole sealed by working a piece of beeswax over it with the tongue. Six small incisions are made in the skin for the withdrawal of the blood. The cupping-horn is called *chusi* (*tulumika*, Chin.). Cupping is used for headache and for pain in the chest and back. The enema funnel, *chigolya* (*ntimbiri*, Chin.) is made from the neck of a gourd to which is attached a hollow straw for introduction into the anus. Half a pint of an infusion of *nungwiu* is injected for constipation associated with pain.

3: Stannus D-5 (ca. 1912) 1922 FT7 Yao FT7

757 Simple incision is practiced for relief of pain or again "medicine" may be introduced into the wound. Such medicine usually consists of charcoal prepared from various vegetable substances. There is no evidence that any active medicinal principles are involved and the most that is attained is probably a certain amount of counter-irritation. For pain, a string is tied tightly round the part; thus for headache one sees a string tied round the head and doubtless some relief is felt when pressure is made on the temples. A man with an abscess of the hand or foot will tie a string round the arm or leg, but I have never seen it so applied as to produce any effect comparable to that of Bier's hyperæmic treatment. By analogy a string may be worn round the chest for pleuritic pain and by limiting movement may be effective. In many cases a charm is attached to the string as an adjuvant.

The use of drugs as such is widespread but I have very little evidence of their efficacy. The methods of administration are various. The vapor bath is often used. Over a pot of water in which have been dropped herbs and stones heated in a fire, the patient squats enveloped in a blanket and is thereby subjected to the action of the medicated steam. This method is also adopted for exorcism. A case which came recently to my notice was the wife of a native hospital dresser who, suffering pain in the abdomen, avoided my ministrations and consulted a female medicine-maker. She was given a vapor bath as above described and after a few moments, the medicine-woman clapped her on the back and told her to rise. The old woman plunged her hands into the pot and brought forth some human hair tied
[755] in a piece of calico and a human metacarpal bone. "These are what troubled you," she said — fee £1! This is called *ku-lopolola*, to take evil things out for.

Various powdered barks and leaves are applied to ulcers and appear to have an astringent effect in some cases but the majority seem to go from bad to worse. No other external applications have been observed except one for scabies. Incision of the skin and insertion of "medicine" have been mentioned above.

Large numbers of vegetable products are administered by mouth, always in the form of an infusion or suspension. It is probable that a number of these are really beneficial but I am not able to speak in detail of their effects. Many astringents are undoubtedly used for diarrhoea. Herbs containing oil are used for gonorrhoea.

757 Apart from magic medicine dealt with elsewhere and commonly employed for purposes
751 outside disease, charms are used for the prevention and treatment of ordinary diseases and injuries. There are only a few varieties of charms. A vegetable substance, root or stem, may be worn on a string round the part of the body concerned. Thus one sees a couple of little pieces of stick, *mbiji*, on a string tied round the head, round the arm or round the chest for headache, a whitlow or diarrhoea as the case may be. The medicine may be in the form of a preparation, generally charred vegetable substances, and is made into a little packet in leaves and cloth worn most commonly round the neck; it is called *kotumwa*. Such a charm is supposed to be effective against all ills.

3: Stannus D-5 (ca. 1912) 1922 FT7 Yao FT7

Again, charm medicine may be contained in various articles which are also generally worn round the neck. The teeth and claws of the beasts of prey are so employed, generally arranged in pairs bound together so as to form a crescent and suspended from a string. The teeth of crocodiles, lions, leopards, and the claws of the same beasts and of some large birds of prey are thus employed. The teeth etc., are in themselves charms against injury, probably against what one might call homologous injury. The idea of stuffing them with medicine is probably a secondary consideration, a process of fortification of the charm so that its use comes to have a more powerful influence. It is interesting to see of late years that the native, recognizing the decorative value of these crescent-shaped amulets, has begun to copy them in lead and ivory. A series of these of graduated size is worn as a necklace by women. 751 757 825

When a medicine-man is consulted, part payment is made in advance, "payment to go and dig medicine (roots)." The rest of the payment is made when the cure is effected. Should a patient not be satisfied with his treatment and wish to consult some other medicine-man, he pays to the first a quarter of the fee he would have paid if his cure had been effected; this is called "paying him to get his medicine away." Unless this is done, should he recover later, he will be liable to claims for full fees from all of the medicine-men he has consulted; each will say his own medicine has gone on acting and has effected the cure. A medicine-man may take a case he is treating into his own house. 756

In prescribing medicine, very particular instructions are given with an embargo on certain things which may or may not have some use and significance. A medicine-man in 1901 at Malemya's, who inoculated every one in the forehead with bullet proof medicine, said that no one must step across a *muisi* (pestle for pounding grain), and no one must eat the leaves of the sweet potato.

A medicine-man always partakes of part of the decoction he is giving to a patient to show that it is harmless; I think these preparations are mostly inactive. I should hate to sample all the castor oil I have prescribed, though many natives have had suspicions about me when I have not done so.

Poisons. Though there are a large number of species in this country, both vegetable and animal, from which poison might be extracted, those that have gained any reputation among natives and have come under my observation are but few in number. *Mwai* (*Mwabei* Chin.) "the ordeal poison," is the bark of *Erythrophloeum guineensae*. The natives distinguish two varieties of *mwai*, the two trees differing slightly in leaf, flower and bark; *mwai* is the *Erythrophloeum guineensée*, the second variety known as *mperunjilu* is doubtless an allied species. *Mwai* is the poison employed in the poison ordeal.[1] It is administered in a poisonous dose as a decoction of the bark, recovery or otherwise depending on whether or not the poison is voided by vomiting. Natives give as the symptoms headache, giddiness, disturbances of vision, vomiting and purging, with slowing of heart beat. *Mper-* 137 278 [695]

[1] Vide infra, p. 296.

Witch-medicine. The making of medicine against people has been shown to occupy an essential place in *usawi*, and it plays an important part in all occultism. So by insensible grades, the ordinary use of drugs in common diseases is reached, though it is probable that very much greater faith is placed in a packet of burnt roots put under the floor of the house than in the efficacy of any concoction taken by mouth. 754 [757]

There is a general belief that by medicine extra ability verging into supernatural power can be acquired. This power in a general sense is represented by the word *ukoma* and a man so possessed is spoken of as *mundu jua komala*. The desire for increased power may be a perfectly natural one, such as a desire for influence and popularity as a chief, or on the other hand, the power of *usawi* may be aimed at, or again, the knowledge of magic medicine for thieving or for any other practice. *Ukoma* is, therefore, a relative matter. The necessary medicine or initiation into the understanding of magic can be purchased from persons already practitioners, the honest herbalist merging by imperceptible degrees into the most criminal witch-doctor. A single practitioner may prescribe a charcoal dressing for an ulcer, exorcise an evil spirit by a vapor bath, sell medicine to enable the buyer to win a case at court, arrange medicine on a pathway to act as a selective love potion, or prescribe a drug to change a man into a lion. 756 787 791

Deserving of special mention are the people who thieve by the aid of medicine which they have either purchased or prepared themselves. Such a man is called *chitaka* and the medicine *mala wa chitaka*. The active principle of this medicine is said to be prepared from the tail of a hyaena, an animal which is said to be able to enter a house where people are sleeping and kill and carry off the fowls without waking the occupants. The medicine is often carried in a hyaena's tail. The *chitaka* is supposed to approach the house he would rob and chewing some medicine in the mouth, gently blow towards it to put everyone to sleep. The door is supposed to unfasten itself and the thief is free to take what he wishes. He is even said to kill, cook, and eat food in the house while the inmates remain unconscious. A special characteristic of the *chitaka* is that whatever he lays his hands on in the house he must remove, though he does not want it, so that in the morning many unwieldy, useless objects may be found outside the hut. 791 789

There are many other magic medicines. One of these, *luunga*, if introduced into a village, will cause the illness and death of some inmate. Anyone handling the body of the sick man or the corpse after death, sickens and dies until the whole village is wiped out. There is a man serving a life sentence now at the Central Prison, Zomba, who was convicted of having caused the death of many people in a village in Angoniland. He is said cheerfully to have admitted the power of his medicine. 754

Medicine made from a cousin is supposed to be efficacious in various ways. The blood of a cousin is instilled into the ear for otorrhoea. Drinking the water which has been used by a cousin to wash his face relieves intestinal colic. Medicine is made from the hairs of the beard of a cousin or from an *ubilo* and used for chest trouble. 757 605

3: Stannus D-5 (ca. 1912) 1922 FT7 Yao FT7

752
757
413

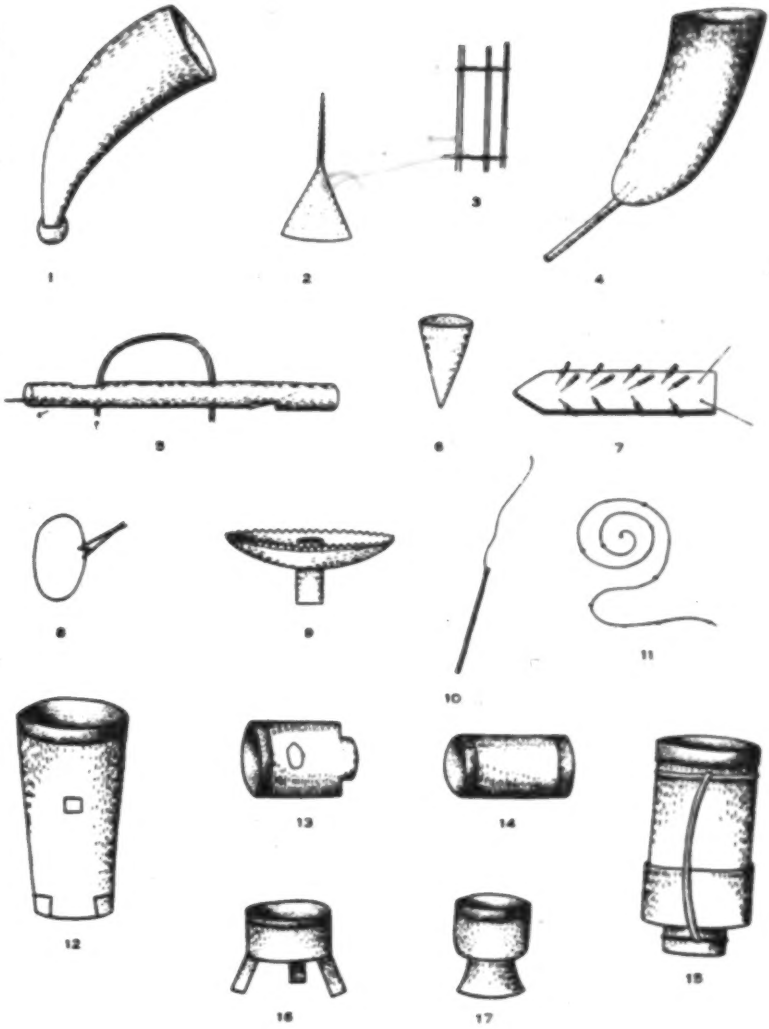

1, Cupping horn; 2, Surgical knife; 3, Splint; 4, Enema funnel; 5-11, Children's toys; 12-17, Drums

[End Plate 22]

The chief or an important village headman

[601] is usually addressed by a kinship term, either *baba* (father) or
643 *ambuje* (master or grandparent). When he is referred to, his
622 name is not used. Village headmen are owners or wardens of
554 villages (*anyene misi*) but only those headmen of some standing
178 are referred to as *mwenye*.

Important village headmen, like the chief, are in mystical
643 danger from pollution by death. They cannot come to the hut in
622 which a corpse is lying ; and they cannot eat the chicken which
554 has been brought to them by relatives of the deceased to announce
761 the death. Like the chief too, an important headman may be buried in a tomb in his village and not in the graveyard.

But an important element in their relationship nowadays is
643 that the Administration will support the chief against a village
622 headman when it comes to a trial of strength, and that a headman
554 these days is precluded by modern conditions from setting up
578 chiefdoms as he did in the old days. Village headmen therefore
691 must struggle for power against their fellows and the chief within the modern Administrative framework. Some attempts are made to resist the power of the chief but these are rarely successful. The dispute between Liwonde and Ndenda illustrates this.

Ndenda was an Nguru headman, who in 1947 had 284 tax-payers under him (Liwonde, the chief, had 186 in his village). Ndenda had come into Liwonde's area before the White invasion and had surrendered with his relative Mlelemba, to Liwonde. The second Liwonde had given him both initiation rights but, unlike his relative, he did not have the right to wear a scarlet headband.

In 1938 or thereabouts, Liwonde decided to move his village site from the Shire River to its present site about half-way up the Great Rift scarp. He sent two of his young men to look for a suitable site, and to plant some mango trees there when they had found one. Ndenda heard of this and sent one of his men to take Liwonde's men into custody. He took their hoes away and then told them to go back to tell the chief they were planting in his (Ndenda's) land. In due course Liwonde moved up to his new site, and asked Ndenda why he had taken the hoes away and whether he owned the country, i.e. was the chief. Ndenda now argued that Mlelemba's ancestors had been given the rights of chieftainship over this area and that the first Mlelemba in the area had given Liwonde some elephant tusks for these rights. Liwonde replied that the chief has a right to tusks and that many had given tusks to him but were not entitled for that reason to rights of chieftainship. Liwonde handled this situation by calling a meeting of the village headmen in the area. They assembled

3:Stanner D-5 (ca. 1912) 1922 FT7 Yao FT7

845 one of Malungu's men died, after giving birth to quintuplets, some thirty years ago. Deformed children are buried alive. A large number of children is always hoped for and where
[165] polygamy is practised, some families are of considerable size, although the mortality among young children is very high. It is, of course, very difficult to state the child-bearing period among natives. It does not start so early as is commonly supposed, and I think the menopause is found within about the same limits as among Europeans.

● 764 165 *Death.* Natives of Nyamland live to a good old age. That such is not the case I have found to be one of the many fallacious beliefs concerning natives which should be relegated to the realm of exploded theories, as I have pointed out elsewhere.[1]

Death in old age is recognized as a natural event but apart from this, all sickness and
[784] death were formerly and are still to a large extent looked upon as the result of the machinations of some person, an idea which forms the outstanding feature in their belief in witchcraft, sorcery.[2]

763 Here I shall mention the ordinary customs in the case of death. During the last hours of a mortal illness, a man is tended by his wife or wives; the head wife sits constantly supporting his head on her lap or against her breast. A woman is similarly tended by her mother, sisters, and friends. As unconsciousness sets in and the extremities become cold, they say, "His spirit has gone and only the heart remains alive."

The native does not like the idea of lingering on and a man on his death-bed will say to his sons, "Now watch me that I die quickly." He may take medicine to help him over that time or he may give his sons instructions as to what to do. Should a man linger unconscious for a long time, friends will ask his sons, "Did he give you any instructions?" If he has done so, the sons will then carry them out. This perhaps consists of bathing themselves in medicines left by their father, while they stand on the *roof* of his house. Some-
[825] times, the natives say of a lingering case, "Ah, perhaps he has eaten of a tortoise's heart!" knowing the phenomenon of the tortoise's heart and believing that by partaking of it, the same property can be conferred on the heart of a man.

764 When death is manifest, the body is covered with a cloth by a brother, a son, or some
[197] other person in attendance. The eyes are closed, the mouth shut, and at the present time, the body straightened out. This, however, is a recent practice copied from the Anyanja, Europeans, and Mohammedans.

764 News of the death must be sent to the chief, and a messenger goes to his village where
203 the chief and his people sit in the village open space. He carries a fowl in his hand. The present of a single fowl always denotes bad tidings. One of the chief's men, seeing the stranger approach with the single fowl, will jump up and take the bird. He is joined by the others and they go away to the cross-roads where they kill the fowl, pluck it, cook it and eat it. In the meantime, the messenger delivers his news to the chief who will produce from his house about eight yards of white calico; if the deceased has been a much respected

[1] Hugh S. Stanner, "The Ilo-spun of sorgrum", (Lusaka, April 11, 1914, p. 1002). [2] Vide infra, p. 266.

3:Stannus D-5 (ca. 1912) 1922 FT7 Yao FT7

771
784
826
539

68. A child, when one of its milk teeth drops out, stands some five yards away facing the door of the hut and throws the tooth over the roof of the hut, saying:

"*Al Mkungulu Ilwe Ipwa-ulyo, mlomi Ipwaye Ipwakwe 'ipa*"
"Oh! *crow tooth your there is, give me my of good oral*"

Religion. The matter of the religious beliefs professed by natives of East Central Africa is one beset with many difficulties to the student of today. It has been the subject of many essays by workers in the missionary field, but the wide contact of the natives of Nyasaland with missionary effort during the past thirty years has done much to confuse the problem, and one feels that many missionaries in their writings rather color the picture with their own feelings. 771

I think probably the Yao with whom I am now concerned have a truer conception of their own beliefs than many of the subject tribes among whom mission teaching has more easily taken root. The religious beliefs of a people are to a large extent the reflection of the circumstances under which that people lives. The outstanding event to all natives is death. At death, something is lost to the body, without which life is impossible. This is the *mzimu* which may be translated "soul" or "spirit." The *mzimu* is said to leave the body of the dying man when he becomes unwell or unconscious. It appears that this same *mzimu* may leave the body during unconscious states unassociated with death, as when a man faints, in epilepsy, and during sleep. 771 761 774

Apart from this evidence of the dissociation of the *mzimu* from the living body, the Yao believe that a man's shadow is an objective manifestation of the soul and they will say "the *shadow* is the *mzimu*." Fear is experienced if a man jumps on the shadow of his fellow. Light is also thrown on the constitution of the *mzimu* by the belief in a certain evil-spirit which dwells in deep pools. It is called *chimulu-mwi*, which means "one who may finish (drink up) all the water." The superstition regarding this evil spirit is that it can suck the blood from your shadow as you stand at the edge of the pool, till you become so weak that you fall in and are drowned. 774 774 776

After leaving the body at death, the *mzimu* goes to take up its place in the spirit-world, occupying a position corresponding to that held by the man during his life. With a truly materialistic conception, the soul is supposed to have all the attributes of the dead man, to be wealthy in proportion as the man was so on earth, and its relative position will be identical with that which he held among the living. The tribal chief becomes a paramount chief in the spirit world, the lesser chief holds sway in his lesser capacity, etc. We shall see that in intercession, when the tribe is threatened with calamities, it is the late paramount chief who is appealed to for help, and when one feudal chief is at war with another, the chief's dead predecessor will be called upon for aid. When a village is moved, it is from the spirit of the dead headman of the village that success in the enterprise is sought. Similarly, in family trouble, some dead ancestor is entreated to set things right, while a native 775

824 778 be supposed to live in such trees. They are convenient natural objects for them to occupy, in fact practically the only ones to be found in villages. Trees may secondarily, therefore, be looked upon as in some degree sacred. About such trees strings or pieces of calico may be placed as an offering to the spirits of the departed. But the Yao do not erect little huts in their vicinity, hung about with strips of calico as is the custom among the Anyanja.

775 Macdonald[1] mentions the spirits in connection with Sochs and other hills round Blantyre and supposes them to be the spirits of the places themselves. This I think is unlikely; they would probably turn out to be spirits bearing the names of long departed Anyanja chiefs whom the immigrant Amangoche Yao venerated just "to be on the safe side," since they had come and taken the country which long ago belonged to the former tribe. When approaching or passing any spot held to be the dwelling place of spirits, salutation is made by clapping the hands.

Spirits of the departed may enter into animals or may take the form of animals, [825] commonly lions and sometimes large snakes (python), but this belief is not so general among the Yao as among other tribes, in my opinion. An animal which is so possessed is called *liyuka*, from *ku-yuka*, "to be transformed."

[774] Apart from this habitation of inanimate objects above mentioned by *mzimu*, there is nothing that points to a belief in Animism among the Yao, so far as I know. Neither hills, rocks, streams, lakes, nor trees have their own spirits, nor are they endowed by the native mind with life.

Deceased persons appear to the living in dreams, the native apparently believing that the deceased appears in his material body.

775 787 791 They believe also in revelation of wishes of the deceased through the medium of the living. The spirit of the deceased is supposed to enter into the medium. The medium, I am informed, is always a woman, never a man. From the descriptions of some of these revelation séances, there can be no doubt that they are manifestations of *la grande hystérie*. The medium works herself up into a frenzy of excitement and in her delirium gives out the name of the deceased, the voice which speaks being that of the spirit within her. She rolls on the ground and foams at the mouth, uttering the word of revelation which is generally to the effect that some deceased chief's spirit is feeling aggrieved at the neglect of his tomb; the voice may go on to say that certain practices are forbidden, or demand that certain rites be observed by the people. The spirits which possess her are generally spoken of as *msasha*, a word which, though sometimes used as equivalent to *mzimu*, usually seems to [158] have rather a sinister significance. Insane persons are called *msasha* and are thought to be possessed by a spirit, and vapor baths with exorcism may be practiced for their cure. In the case of the death of anyone who is possessed, in answer to my interrogation, I have [761] been told that both the spirit which has entered into the man and his own *mzimu* leave his body.

[1] Op. cit., vol. I, p. 70.

622 are composed of the descendants of slave-wives of village headmen in days past. Like the village
643 headmen the chief was considered to be in danger from contact with death. He could not attend
622 the funeral of commoners, he could not eat the
761 chicken which was brought to him at the announcement of the death of a commoner (for a village
[753] headmen) or subject (of a chief). Should he do so he would suffer from a disease called *ndaka*. Also village headmen, like the chief were supposed to be well versed in medicine and were regarded with some awe on this account. The chief and the village headmen were distinguished from the commoners in these ways.

643 But, the chief himself was a village headman. He had to administer the affairs of his family
622 group and slaves as had other village headmen.
692 He was involved in the struggle for power going on around him because he was not lifted above these secular struggles as was, for example, the Zulu King.[1] Duff MacDonald records for example: "In a dispute between the inhabitants of different villages, the respective headmen represent their own subjects, and the chief is appealed to. All his decisions are final. Still the chief may otherwise have less influence than a powerful headman, and we have known cases where he simply contented himself with grumbling when his headman acted contrary to his desire; and in many criminal trials he is eclipsed by the sorcerers and pounders of poison."[2]

643 Again MacDonald records how the chief tried
622 to entice subjects away from a village headman at a trial by pointing out that the village headman had a poor character and was unsuitable to look after people.[3] While there seems to have been some evidence that a number of village headmen under a chief acted jointly in the face of a common danger, but apparently with no powerful military organization. Village headmen seem to have been almost entirely autonomous in their actions, slave-raiding on their own, even raiding villages who paid tribute to the same chief as they did.

3:Stanna D-5 (ca. 1912) 1922 F77 Yao F77

845 one of Malunga's men died, after giving birth to quintuplets, some thirty years ago. Deformed children are buried alive. A large number of children is always hoped for and where polygamy is practised, some families are of considerable size, although the mortality [165] among young children is very high. It is, of course, very difficult to state the child-bearing period among natives. It does not start so early as is commonly supposed, and I think the menopause is found within about the same limits as among Europeans.

Death. Natives of Nyasaland live to a good old age. That such is not the case I have 761 found to be one of the many fallacious beliefs concerning natives which should be relegated 165 to the realm of exploded theories, as I have pointed out elsewhere.[1]

Death in old age is recognised as a natural event but apart from this, all sickness and [154] death were formerly and are still to a large extent looked upon as the result of the machinations of some person, an idea which forms the outstanding feature in their belief in witchcraft, sasai.[2]

Here I shall mention the ordinary customs in the case of death. During the last hours 763 of a mortal illness, a man is tended by his wife or wives; the head wife sits constantly supporting his head on her lap or against her breast. A woman is similarly tended by her mother, sisters, and friends. As unconsciousness sets in and the extremities become cold, they say, "His spirit has gone and only the heart remains alive."

The native does not like the idea of lingering on and a man on his death-bed will say to his sons, "Now watch me that I die quickly." He may take medicine to help him over that time or he may give his sons instructions as to what to do. Should a man linger unconscious for a long time, friends will ask his sons, "Did he give you any instructions?" If he has done so, the sons will then carry them out. This perhaps consists of bathing themselves in medicines left by their father, while they stand on the roof of his house. Sometimes, the natives say of a lingering case, "Ah, perhaps he has eaten of a tortoise's heart!" [825] knowing the phenomenon of the tortoise's heart and believing that by partaking of it, the same property can be conferred on the heart of a man.

764 When death is manifest, the body is covered with a cloth by a brother, a son, or some other person in attendance. The eyes are closed, the mouth shut, and at the present time, [197] the body straightened out. This, however, is a recent practice copied from the Anyanja, Europeans, and Mohammedans.

764 News of the death must be sent to the chief, and a messenger goes to his village where the chief and his people sit in the village open space. He carries a fowl in his hand. The 203 present of a single fowl always denotes bad tidings. One of the chief's men, seeing the stranger approach with the single fowl, will jump up and take the bird. He is joined by the others and they go away to the cross-roads where they kill the fowl, pluck it, cook it and eat it. In the meantime, the messenger delivers his news to the chief who will produce from his house about eight yards of white calico; if the deceased has been a much respected

[1] Hugh S. Stanton, "The life-span of negroes", (Lancet, April 11, 1914, p. 1052). [2] Vide infra, p. 266.

cipate yearly in the great initiation festival for boys and girls. Consequently as they 881
repeat each year the lessons of their own initiation, the ceremonies are the main 852
vehicle of Yao culture.[1]

There are also two Moslem ceremonies:

(1) *Jandu*, the boys' Moslem baptism, which takes about seven days, and is usually 881
worked in with *hupanda*: 852

(2) *Nsondo*, the girls' Moslem baptism, which is the same as *jandu*, 177
but usually quite separate from *ciputu*. It is important that the wife of a Moslem should have her *nsondo* so that she knows how to prepare the food properly at Ramadan.

Menstrual and Other Taboos

Menstruation is held to be dangerous. A special mat is used by the woman during 841
this time, and is rolled up and kept during the rest of the cycle. The hut is completely
replastered after menstruation. Intercourse during menses leads to disease of the man. 834
Sexual contact is dangerous to persons at certain other periods: during initiation ceremonies, during mourning, and for babies who have not been through the protective rite. The danger is thought to lie in *ndaka*, a dread disease characterized by swelling. This may be transmitted by salt in the food. Deaths are often attributed to 'salt'. Much of the significance of the mourning is that medicines are prepared which protect the mourners against the dangers attendant on sexual activity.

Burial Rites

764
News of a death must be sent to the chief by a messenger carrying a single fowl.
The chief gives a present of calico for wrapping the body, and a goat for the burial [203]
men. These are called *awilo*, neighbours unrelated to the dead, who volunteer for [431]
certain duties. They prepare the body for burial and carry it in procession to the graveyard outside the village. No uninitiated person is allowed to see the funeral. All who attend the burial are prohibited from sexual intercourse for one month. After this time the prohibition is lifted by a ceremony of beer drinking and feasting, and on the following day all fires in the village are extinguished, and then relit, and the mourners are shaved. A year later beer is brewed for a final ceremony.

For a period after her husband's death a widow is unclean, and has to be purified 768
by ritual intercourse with a man who is paid. The widow is not allowed to remarry 589
for two or three years. A widower leaves his wife's village, after receiving a parting
gift. The widows of ordinary persons are not inherited. If a man has himself a 'name' [587]
(rank and social position), he has an heir, who inherits also the wives of his predecessor. But if the heir (the maternal nephew) has married a cross-cousin (mother's brother's daughter) he would not consider the wife's mother as his inherited wife.

Before the burial the dead man's hut used to be destroyed, together with his pos- 764
sessions. Immediately afterwards a consultation is held as to whether retaliatory
action against sorcerers is called for. The *awilo*'s duties include not only the conduct- 767
ing of the burial, but also the subsequent inquiry and the conduct of the second ceremony, the beer drinking, at which they shave the mourners. A man who has

[1] Main sources for girls' initiation: Heckel, 1935, p. 19; Stannus, 1, 1910, pp. 184–7; 4, 1922, pp. 269–74; Stannus and Duvey, 1913; Duff, 1903, pp. 312–15; Abdullah, 1919, pp. 16–17; Macdonald, 1882, vol. i, pp. 129–30; Werner, 1906, pp. 126–7; Johnston, 1897, p. 410.

1: Tew E-4 (no date) 1950 FT7 Yao FT7

764 performed these services used to enter a special relationship of privileged familiarity with
767 the village of the dead. This has died out in Nyasaland, but accounts of *Utasi*[1] among the Yao at Masasi and Songea suggest that something of the kind is still practised.

766 Chiefs and headmen are not buried outside the village, as are other persons. They used to be buried before their own huts, but now in the centre of the village. Shrines were raised over their graves, at which offerings of beer and flour were made. If the village was moved the pot of beer sunk into the ground at the chief's grave was also removed and reinstated at the new site. A dead slave was buried by his fellow slaves; normal rights of sepulture were denied to suicides and to persons who had died in taking the poison ordeal (that is, convicted sorcerers).[2]

OTHER DISTINCTIVE CULTURAL FEATURES

301 The Yao have a tribal mark of two short cuts on each side of the face between the
304 eye and the ear.[3] Their women did not wear the *pelele*, lip-ring, although their neighbours the Makua and Makonde did;[4] the fashion seems to have spread to south Nyasa
[171] in the 1880's, as many travellers commented on it, without distinguishing whether the wearers were Yao, Nyanja, or Lomwe.[5] The women used to pierce the left *ala nasi* and insert a metal or lead stud, *cipini*.[6]

MAKUA-LOMWE

TRIBAL AND SUB-TRIBAL GROUPINGS AND DEMOGRAPHY

000 NOMENCLATURE

The *Ma-* in *Makua* is not a prefix, but part of the name, Variant spellings are *Makwa*, *Mahoa*, *Mahoane*. They are sometimes referred to by the name of one subdivision, the Medo Makua, and called *Ameto* or *Meto*.[7]

The *Lomwe* (also spelt *Lomwei*) are called *Alolo* by the Yao, and are also frequently called *Anguru* (*Nguru*) which is an old name for the people of the region.[8] Any of the Makua-Lomwe peoples who have migrated into south Nyasaland are collectively termed *Nguru* in official reports; Nguru is a hill in the region of Portuguese East Africa, whence they come, but they should not be confused with the Nguru of Tanganyika.[9] Another name for them is *Acilowe*.[10] *Alolo* is incorrectly applied to all the Lomwe; it has a stricter application to the Cuabo from Quilimano.

[1] Scrivenor, 1937; Moreau, 1941; Spies, 1943.
[2] Main sources for burial are: Johnson, 3, 1922, pp. 28–30; Stannus, 4, 1922, pp. 240–6; Abdullah, 1919, pp. 19–21; Duff, 1903, pp. 322–4; Macdonald, 1882, vol. i, pp. 110–12.
[3] Murray, 1932, p. 153.
[4] Thompson, 1882, pp. 77–8, writing of the Yao of the Ruvuma valley.
[5] Macdonald, 1882, vol. i, pp. 16–17; 'around Blantyre hardly any woman is without it'.
[6] Stannus, 1, 1910, p. 316.
[7] *Handbook of Portuguese Nyasaland*, 1921, p. 39; Murray, 1922, p. 56; Weule, 1, 1909, p. 259; Livingstone, 1874, p. 32.
[8] Theal, 1899, pp. 415–17; Gaspar Bocarro passed through Manguro country. Burton, 1873 (Lacerda's Journey, 1798), mentions Manguros.
[9] Abraham, 1931, p. 15; Murray, 1922, p. 46.
[10] Johnson, W. P., 4, 1894.

2: Mitchell E-5 (1946-1949) 1956 FT7 Yao FT7

The chief identifies a man who comes to see him in exactly the same way, and the Administration has adopted a similar system, except that it has its own definition of the village. During the initiation ceremonies, the initiands[1] are housed in long grass sheds which are subdivided into sections. Each section or room of the long shed houses the boys or girls from one village. If villages share a burial ground, they have allotted portions where they bury their dead separately. In these and many other ways the village is looked upon by the Yao as a distinct unit in the chiefdom.

The chiefdom in the old days was distinctly a territorial unit and all the villages within that area recognized the superiority of the chief. The boundaries of the old chiefdoms were marked by rivers and hills and fixed after conquest and agreement. They are still well remembered. Modern chiefdoms are defined in their limits partly by Government decree and partly by custom. When Principal Headmen were appointed, the districts under them were demarcated with 'due regard being given to the composition of the Native population'. The traditional areas under the various chiefs, therefore, were recognized by the Administration as districts, so that the districts or their sections almost coincided with the chiefdoms. Some disputes between chiefs over boundaries have occurred from time to time and the Administration has had to arbitrate. For example, the Provincial Commissioner of the Southern Province reported a difference between Liwonde and Kawinga in 1936,[2] but through time these differences have been eliminated.

Traditional and Administrative boundaries do not coincide in a few places, for two reasons. Firstly, the Administration has accepted an obvious and physical boundary in preference to an indistinct and social boundary. It has taken the Domasi River as the boundary between Ntumanje and Mposa, though in fact a few villages under Mbela, Kawinga III's son, live on the south side of the river, and fall for Administrative purposes in Ntumanje's area. Mbela is still very strongly associated with Kawinga in ritual and kinship matters. His dealings with the

[1] I am grateful to Prof. Schapera for suggesting this word for those who are undergoing initiation ceremonies. The parallel is with graduands, i.e. those who are undergoing graduation ceremonies.

[2] *Report of the Provincial Commissioner, Southern Province* (1936), 20.

2: Mitchell E-5 (1946-1949) 1956 FT7 Yao FT7

strike out with his adherents to found a new village. A sum of £6 or £7 is a considerable amount in everyday Yao life where the annual cash income of the average individual is not much more. The leader of a dissident group is prepared to forgo this wealth to get one foot on to the lowest rung of the political ladder—that is by becoming a village headman. 621 166 627

Obversely there is a great deal of sentiment attached to the idea of a united village. To the Yao way of thinking a village is broken by fighting or death, and these evils are linked by witchcraft beliefs. The association of death and the break-up of the village is brought out clearly by the funeral ablutions of villagers after the burial of one of their number. An important ingredient in the medicine with which the mourners wash themselves after the funeral, is *cikula*. It is the earth from a particular type of termitary which is usually about 12 to 18 inches high, upright and almost cylindrical. The crust is very brittle and it is comparatively easy to chip off a piece. When this is done a mass of internal chambers and passages is revealed. The soldier ants, unlike those of other species that retreat into the darkness of their passages as soon as they are exposed, come into the open daylight and swarm in confusion over the fractured termitary. When I questioned my informant about *cikula*, he kicked the crust off the top of one of the hills and said, 'See all the houses in the village of the ants? I have broken their village. So it is with death. It breaks the village.' 621 764 783 825

The Yao believe that death 'breaks the village' and that conflicts through sorcery lead to death. Therefore, conflicts are the real cause of village splits. Hence differences must be settled immediately if the village is to persist, because if they last too long one of the aggrieved parties is sure to start using sorcery against its opponents. Those who do move away, go to a distant place because they believe that sorcery operates only where there is social interaction. But the fear of sorcery on the other hand is just as strong a force in maintaining the physical unity of the village. It is while the migration is being planned that sorcery is most likely to be used. This is particularly so if the village break is taking the form of a lineage split. This happened, for example, in Lupunje village. 621 754 626

Kalambo, the sister's son of Lupunje, wanted to leave the village and had gone to seek a suitable site. When he returned he found that 621 626 753

2: Mitchell E-5 (1946-1949) 1956 FT7 Yao FT7

621 his mother was ill and had gone with Lupunje's younger brother to
626 the diviner to find out the cause of the illness. The diviner indicated
753 that Lupunje thought that Kalambo was not showing him the proper respect. Lupunje knew that his sisters had lost their value in the lineage since they had stopped bearing children, whereas Kalambo's sisters were still reproducing. His malice had caused the woman's illness. When Kalambo got home he asked his mother's brother to blow water out of his mouth [1] and help him to prepare some medicine for the sick woman. This Lupunje did and the woman recovered immediately.

Shortly afterwards Kalambo remonstrated with his mother's brother for causing the illness of his sister, but Lupunje said that he had no control over it: the spirits had brought it on her. Kalambo knew that he could do nothing and abandoned the idea of building his own village. He knew that there was bound to be more illness if he carried on with his plan.

182 Clearly the belief in the mystical powers of the ancestors or of
621 sorcery is a force which prevents sections from breaking away
626 from the village. A break follows only when opposition within the village has reached sufficient pitch to force one of the sections to take the risk of illness, rather than to continue living in the village. Sometimes the dissident group comes back because further deaths at their new village site convince them that their action was wrong.[2]

Effects of the Headman's Personality

622 Whether a village maintains its unity or not, depends very largely on the personality of the headman. This is why the officiating headmen and others at the installation ceremonies are so insistent that cases should be settled quickly. The main duty of a headman is to maintain harmonious relationships within his village and to see to the welfare of its members. All severe
[787] illnesses are immediately reported to him, and so are the results of all divinations. He usually sends his representative to divina-
[764] tions concerning kinsmen not related to him matrilineally. He is immediately notified of all deaths and he organizes the funeral rites. Squabbles are brought to him for arbitration and even
622 where squabbles are settled by kinsmen in the village, usually the
692 headman is formally told of them. Frequently marriage diffi-

[1] An act which recants malice. See Chap. VI, p. 139.
[2] See the case history in Chap. VI, p. 153.

2: Mitchell E-5 (1946-1949) 1956 FT7 Yao FT7

562 601 'sisters' and 'mothers' because alternate generations are merged in kinship terminology and in behaviour. A man's sister's daughter, for example, is called 'mother', and her daughter (his granddaughter) in turn becomes 'sister'. A woman calls her male matrilineal descendants 'children' (*mwanangu*), or 'grandchildren' (*yisikulu*); her matrilineal male progenitors 'mother's brother' (*akwelume*), or 'brother' (*alumbwangu*).[1] By extension, therefore, another way of expressing common matrilineal descent is to say that two people are the children of one person, *ŵanakajumo*, even though that person may be their great-grandmother. A term which is almost synonymous with this is *mucitumbu cimo*, 'in one womb', used as 'we were conceived in one womb', though once again the reference may be to a common grandmother. But the inclusiveness of these terms varies in different contexts. Any may refer to the matrilineage of maximal span within the village, or to a section of the matrilineage seen as a segmented organization of parts. It is only by reference to the particular ancestress that the range of the term may be determined.

The Unity of the Matrilineage

613 A person identifies himself most closely with the members of his matrilineage from whom he expects most help and whom he, in turn, is expected to help. If he is called upon to pay a heavy fine it will be the members of his own matrilineage who will club together to find sufficient money. They, more than others, [753] support him in his quarrels. They come to his aid when he is ill or injured, by consulting the diviner and trying to find the sorcerer who is causing his illness, and by finding medicines which will bring him back to good health. They send him money if he has left the country and needs it to return. The goods he brings home from the labour centres will be shared mostly [764] among his matrilineal relatives. They will find the food to be used at his funeral and also see that his burial is properly carried [428] out. He owes these duties in turn to them. His property will stay almost entirely within the matrilineage after his death.

613 753 Relationship, unless qualified, is looked upon as being entirely matrilineal. This is well illustrated by the beliefs about the

[1] She more commonly addresses them as *acimweni*. See p. 147.

2: Mitchell E-5 (1946-1949) 1956 FT7 Yao FT7

613 578 754 Kausi (F3), Bt. Madi (F10), Bt. Aliya (F11) and their children moved across the stream and built with Cikoja. One of Cikoja's wives stayed in the old village and the other moved across. Shortly after this Asimama (E6), Cikoja's sister, decided that she would like to move across to be with the headman. She reported to Kanyenga who sent her to tell Cikoja. Cikoja in turn sent her to tell Amidu. Eventually, Cikoja, Amidu, Kanyenga and Salimu (D3) had a meeting about it. Neither Amidu nor Kanyenga, nor Salimu, was enthusiastic, but they said she should follow her own wishes. She moved across with her children. Asimama's arrival on the other side of the stream was greeted with some suspicion by Cilimba because she was a member of the junior lineage. However, Cikoja assured him that he wanted one of Asimama's daughters to fetch water for him. Cilimba was satisfied with this explanation and accepted the situation as it was.

It was not easy, however, and there were continual quarrels between the children of Bt. Ntalika and those of Asimama. The members of the junior segment in the old village also looked upon this arrangement with some suspicion. The friendship of Amege (F28), Asimama's daughter, with Asubiya (E9), her mother's younger sister was particularly deprecated by the members of the junior segment. Asubiya was warned several times that this friendship could only lead to sorcery.[1]

In the meantime, Salimu (D3), who will be the next Cikoja and who was the senior lineage member in the old village site, undertook most of the duties of the headman in that section. He settled most of the minor cases and saw to the divining. However, he reported his doings to Cikoja who was still the village headman.

In 1948, another death took place and the tension became evident again. Bt. Ntalika's child died. Kausi (F3) and Jauma (F7) went to the diviner, who revealed that Amege had gone to Salimu to grumble about what was going on in the other village, and Salimu had taken this opportunity of bewitching the child. Cikoja refused to accept this explanation and said that the diviner was a liar. When the body was being washed, a knife was found under the mat on which it was lying, and the story went around that a piece of flesh was taken out of the dead child's buttock.[2] Cikoja interpreted this as meaning that Bt. Ntalika herself had bewitched the child. He felt it unnecessary to call a funeral meeting. Shortly after this there was some friction between Amisa and her younger sister Asubiya, arising out of jealousy because of the difference in their harvests. Bt. Amisa was convinced

[1] This is based on the fear of backbiting. See p. 138.

[764] [2] Once a person is dead the matrilineal relatives do not touch him. They leave the hut and the undertakers (*aŵilo*) wash the body and prepare it for burial. They reported this finding to Cikoja.

3: Stannus D-5 (ca. 1912) 1922 FT7 Yao FT7

845 one of Malungu's men died, after giving birth to quintuplets, some thirty years ago. Deformed children are buried alive. A large number of children is always hoped for and where
[165] polygamy is practiced, some families are of considerable size, although the mortality among young children is very high. It is, of course, very difficult to state the child-bearing period among natives. It does not start so early as is commonly supposed, and I think the menopause is found within about the same limits as among Europeans.

Death. Natives of Nyasaland live to a good old age. That such is not the case I have
761 found to be one of the many fallacious beliefs concerning natives which should be relegated
165 to the realm of exploded theories, as I have pointed out elsewhere.[1]

Death in old age is recognized as a natural event but apart from this, all sickness and
[754] death were formerly and are still to a large extent looked upon as the result of the machinations of some person, an idea which forms the outstanding feature in their belief in witchcraft, *usewi*.[2]

763 Here I shall mention the ordinary customs in the case of death. During the last hours of a mortal illness, a man is tended by his wife or wives; the head wife sits constantly supporting his head on her lap or against her breast. A woman is similarly tended by her mother, sisters, and friends. As unconsciousness sets in and the extremities become cold, they say, "His spirit has gone and only the heart remains alive."

The native does not like the idea of lingering on and a man on his death-bed will say to his sons, "Now watch me that I die quickly." He may take medicine to help him over that time or he may give his sons instructions as to what to do. Should a man linger unconscious for a long time, friends will ask his sons, "Did he give you any instructions?" If he has done so, the sons will then carry them out. This perhaps consists of bathing themselves in medicines left by their father, while they stand on the roof of his house. Some-
[825] times, the natives say of a lingering case, "Ah, perhaps he has eaten of a tortoise's heart!" knowing the phenomenon of the tortoise's heart and believing that by partaking of it, the same property can be conferred on the heart of a man.

●764 When death is manifest, the body is covered with a cloth by a brother, a son, or some other person in attendance. The eyes are closed, the mouth shut, and at the present time,
[197] the body straightened out. This, however, is a recent practice copied from the Anyanja, Europeans, and Mohammedans.

764 News of the death must be sent to the chief, and a messenger goes to his village where the chief and his people sit in the village open space. He carries a fowl in his hand. The
203 present of a single fowl always denotes bad tidings. One of the chief's men, seeing the stranger approach with the single fowl, will jump up and take the bird. He is joined by the others and they go away to the cross-roads where they kill the fowl, pluck it, cook it and eat it. In the meantime, the messenger delivers his news to the chief who will produce from his house about eight yards of white calico; if the deceased has been a much respected

[1] Hugh S. Stannus, 'The life-span of negroes', (*Lancet*, April 11, 1914, p. 1063). [2] Vide infra, p. 288.

3: Stannus D-5 (ca. 1912) 1922 FT7 Yao FT7

 764

person, he may also give a goat. The calico is to wrap up the body of the dead, the goat is for the undertakers, *awile*.[1] 203

Until eight or ten years ago, the Wayao buried their dead in a posture of complete flexion. The preparation of the body after death is carried out by friends from a neighboring village who volunteer for the service. They are known as *awile*, (sing. *mbile*). Macdonald[2] thinks the word originally meant relatives; it has essentially the opposite meaning now. The corpse is washed in ordinary water and no anointment is made. The limbs, formerly, were then flexed on the body and at all the joints. The clenched hands were placed under the chin of the bent head or the hands were spread over the face of the flexed head, while the legs were tightly bent at the knees and brought up close against the abdomen. The corpse was securely bound in this position and adorned with a loin-cloth of bark. The body of a man found stiff and extended was a source of great trouble. Water was heated, and the body bathed until it was as relaxed as possible. As much force would then be applied as was necessary to gain the required degree of flexion, the bones often being broken in the process. 764 [767]

In the case of a woman, her female friends put on her bark-cloth loin covering, but the washing and trussing up of the body were usually done by men unless there were some women particularly skilled in the operation. [767]

The flexed body was then set up on the deceased's sleeping mat within the hut, and from time to time, so long as it remained exposed, it was washed, people coming from other villages to offer their services for this task. Watchers sat continually by the body, the wife and perhaps a brother on either side, while others slept in the hut to take their turn later. The rest of the mourners sat on the veranda about the door.

As soon as the *awile* had finished their work, wailing began, started by the wife and carried on by all the women of the village and the women relatives from elsewhere. Wailing continued all day until about ten in the evening, and then started again between two and three in the morning. This went on for three or four days or was intermittent for a longer time, always recommencing with the arrival of a party from another village. I have never heard of flour being put on the heads by Yao mourners, as mentioned in *Africana*.[3] 765

News of a death was always sent to all the relatives, and burial might be delayed to allow for the arrival of those from a distance. Under such circumstances, the body was enclosed in a casing of bark, the ends being closed by bamboo pegs. Exaggerated signs of grief were sometimes made by the mourners who beat their breasts with their hands while they knocked their heads against the ground or a wall, but the Yao did not indulge in the excesses of the Anyanja near Lake Chilwa who practiced a kind of flagellation, the wailers within the house meeting any new-comers at the door and beating them with sticks. This treatment was not resented. Women alone did the wailing; a man indulging in such expression would be laughed at. His part in the old days when the natives possessed firearms was [764]

[1] Vide infra, p. 244. [2] Op. cit., vol. 1, p. 108. [3] Ibid.

765 to fire off his gun as long as his powder lasted. During the period of mourning, drumming
[534] went on continuously, *chindimba* being played on the three small drums called *ichoma*.

With the exception of the flexed attitude of the body, the foregoing description is a correct account of what happens today. The body is now fully extended.

The *ausile* are two or four in number, although other friends may assist in all their ser-
767 vices. On about the third day, the *ausile* sew up the body in bark cloth, completely envelop-
764 ing it; a bamboo needle is used and left sticking in the cloth at the last stitch. The body is then enclosed in a mat slung on a pole, and carried from the hut to the grave. First, the procession makes a round of the village, passing by all the houses which the dead man used to visit, and over all the paths he used to cross. His children and those of his relatives under seven or eight years old gather in the village, and throw pieces of charcoal toward the body as it passes, "so that they shall forget the dead man," or run after the corpse, while some one sprinkles medicine over them.

As the procession leaves the village, it is headed by the drums playing *chindimba*, but
764 after a few hundred yards, only the *ching'anga* drum, now called *chitanda*, beats time for a
[534] short distance; the procession then goes on quietly. Following the drums, walks the mother or another relative carrying flour with which the grave will be marked out. Behind this mourner, the body is borne by the *ausile*. The *ausile* are always the first to carry the body, but are later relieved by other friends of the deceased; no one would ever ask to be relieved.
[114] After the chief mourner, follow the other relatives and friends, the men first, the women behind. Boys just back from their *unyago* attend to learn the customs. All the relatives of the deceased go to the burial, contrary to Macdonald's account.[1]

In this order, the procession reaches some tree thirty or forty yards from the place of burial where the corpse is put down in the shade, *mtula*, "resting place", and while the women and part of the men watch beside it, the *ausile* proceed to the burial place. They cut branches from a sacred tree, and strew them on the path. On approaching the appointed spot, they clap their hands in salutation, asking that the burial ground be opened to them.

The head *mbile* chooses the site where the grave shall be dug, after which the mourner marks out the limits with the flour she has brought. In the days when the body was buried in contracted posture, a circular grave was dug just big enough to allow two men to work in it. Eight feet was the usual depth but this was decided by the deceased's *nyanse*, if he were living, otherwise, by his near relatives. In the east side of this circular well, a cave was excavated, just large enough to admit the contracted corpse. When all was prepared, the body accompanied by all the mourners, was brought from *mtula* to the graveside. The chief *mbile* with a friend of the man's family and one of his wife's, standing in the grave received the body and placed it in the cave, resting on a mat and covered with bark cloth. The body lay on its side with its back toward the well, and its face looking

[1] Op. cit., vol. I, p. 106.

3: Stannus D-5 (ca. 1912) 1922 FT7 Yao FT7

toward the east. After adjusting the body in its place, the *mbile* would tear open the shroud over the ear, and pour on to the pinna some powdered beads to be used by the dead man as money in the hereafter. Except in the case of chiefs, no objects were buried with the dead, contrary to Macdonald's description [1] of the Amangoche. The pole on which the body had been carried to the grave was broken into bits and together with any stick that had been used to measure the body for the cave, was placed in the grave. The opening into the chamber was then closed by a mat fastened over it by pegs and supported by pieces of wood. The *mbile* clambering out of the well, pushed the first earth backward into the grave with their elbows, after which the rest of the earth was shovelled in quickly, and a heap made at the surface. The ground about this mound was swept clean with a bunch of leaves by some one walking backward so that no footprints were left; the bunch of leaves was thrown on top of the mound. No medicine was put in the grave, nor were the household utensils placed on the mound, as Macdonald states concerning the Amangoche.[2]

For some years past, the type of grave made among the Yao has resembled that of the Anyanja,[3] a long pit with a chamber scooped out along the whole length of one side. In this, the corpse is placed in a fully extended position so that it lies on its back with the feet toward the east. With this exception, the account given above holds good for the present day. The method of suspending the corpse in a mat slung on forked sticks within the grave, mentioned in *Africana*,[4] is not found among the Amachinga Yao.

On the way back to the village, two *mbile* lead, followed by the men, the women, and lastly, by the other *mbile*. First, all wash, the men upstream, the women downstream; no one may wash another's back. The hoes used in digging the grave are also washed; hoes are never washed on any other occasion.

During the funeral, some responsible old man is left in charge of the village with several younger men to assist him. Just before the return of the funeral party is expected, the old man sends one of the younger men to set medicine at the side of the path along which the mourners will pass. This medicine is made from the bark of the *mpingo* tree and is used for purification; it is placed in a sherd. Each person as he arrives at the spot squats down, dips the little finger of each hand into the medicine, and passes the fingers between the little toe and the third toe of the corresponding foot. The last comer throws any remaining medicine into the bush. As they near the village, a gun is fired and wailing is resumed for a few minutes, after which it ceases altogether. The old man who has been left in charge of the village always inquires whether all has gone well at the interment.

That evening, the time is passed in singing *chindimba*.[5] All those who attended the burial, sleep in the village, and if the deceased's relatives can afford to provide the necessary food, all remain in the village for a number of days equal to the period which elapsed between death and burial. Sometimes, when burial was long delayed, the mourning party

[1] Op. cit., vol. I, p. 107.
[2] Ibid.
[3] Stannus, 'Notes on natives of British Central Africa,' op. cit., p. 313.
[4] Macdonald, op. cit., p. 106.
[5] Vide infra, p. 267, 270.

3: Stamnus D-5 (ca. 1912) 1922 FT7 Yao FT7

then listens to an account of the circumstances attending the illness and death. The point 768
at issue is whether there is any evidence pointing to death from unnatural causes which 6a2
requires consulting a diviner. The chief practically always agrees with the relatives, and it is said that he will never press them to go to the *uschisango* unnecessarily. The case may end with this conference, or here may begin the long series of events described under *usuwi*.[1]

During the month subsequent to the funeral, certain taboos have to be observed. The 765
widow may not bathe, and with the exception of the *uwile*, all who attended must refrain 768
from sexual intercourse. At the expiration of this period, beer is brewed in the village, and all the friends and relatives are again summoned. This beer-drinking is called "the beer of rottenness," or "the beer of resignation." In addition to the beer, food is provided, and everyone helps himself without ceremony. *Chindimba* is sung and danced and at the present day, bands of trained dancers attend, including *ching'wenyeng' wenye*.[2] A pot of beer is sunk into the ground, marking the site of the dead man's house. The night of *matapata*[3] [833]
sees husbands and wives reunited, and the widow may go through ceremonial intercourse with a man appointed for the purpose called *lituwu* or *mbile*. Sometimes the widow refuses *lituwu*, and is given medicine instead to cleanse her; her body is then no longer "hot" and likely to bring disease to those about her. A widow does not marry again for two or three 587
years. A young man who loses his wife has no longer any standing in her village after 768
matapata. He is usually given a present, with the suggestion that he go elsewhere. After the death of an infant, the mother is considered unclean. She sleeps on a mat apart from her husband till after the ceremony of shaving, and then undergoes a ceremonial coitus with her husband — in which case he is called *lituwu* — after which, ordinary cohabitation is resumed. If she has been a widow, or if the child was born "with disease,"[4] another man acts as *lituwu*.

The morning following *matapata*, all the fires in the village are extinguished. A fresh 769
blaze is then kindled with the fire-drill, *lumangu*, either in the chief's house or in some spot [372]
nearby, and from there, fire is carried to all the houses. The ashes of the old fires, the stones supporting the cooking pots, and the porridge sticks are taken to the cross-roads, and there destroyed. Everyone then shaves all his own hair, head, axillae, and pubis. [302]
The custom of the second shaving by the *uwile*, described in *Africana*,[5] is, I think, an adaptation from the Anyanja. A year later, beer is again brewed, and all the relatives summoned to the village to partake of it. There is dancing, but no ceremony.

The Yao bury their dead in regular graveyards in wooded country, the thicker the 764
forest, the better, often two or three miles away from a group of villages. Different villages bury their dead in different parts of the burial ground; relatives are usually buried near one another. Graves are never revisited, and no one would enter a graveyard except at the 769
time of a funeral, and then only after obtaining permission from the chief. Such spots are

[1] Vide infra, p. 286.
[2] Vide infra, p. 279 and Pl. I.
[3] Beer-drinking.
[4] Vide infra, p. 286.
[5] Macdonald, op. cit., p. 111.

7: Hetherwick M-5 (ca. 1900) 1902 FT7 Yao FT7

775 present fortunes. But it is to the human soul after death, when it is considered as having an influence on the lives and fortunes of those it has left behind in the world and consequently as a power to be propitiated and honoured, that the term *malungu* is more strictly applied. Freed from the body it passes to *malungu*, and there is regarded as endowed with powers which it never possessed when alive on
769 earth. To pray to such a spirit is described as *kulomba malungu*, to worship *malungu*, never *kimba* in this case. Such *malungu* worship enters largely into Yao religious or social life. In almost every Yao village there will be found a shrine which is the centre of the worship of the inhabitants. It consists of a carefully
346 built hut enclosed within a strong grass fence or hedge of a species of cactus plant.
769 The hut itself is built of the usual native materials—the walls of wooden posts,
778 bamboos, and strong reed grass bound together with bark-rope and plastered over with clay or stiff mud. The roof is of grass laid on a framework of bamboos, and is generally covered with long strips of white or coloured calico. On the ridge or apex of the roof are fixed a couple of flags or an umbrella or two. One wall is usually left open so that the interior is easily seen. Within, from the bamboo rafters are suspended handkerchiefs, cloths, bunches of beads, etc., all offerings to the *malungu* of the dead headman or chief from his friends and relatives. The floor is of clay carefully smeared with sand in native fashion. A raised platform or mound of earth in the centre marks the spot where the grave was made. The
764 *awile* or officials who preside at the funeral obsequies, first dug for about 8 or 10 feet down in a perpendicular direction, and then on the western side of this well they hollowed out a shallow cave in the earth. In this the body was placed, laid on its side with the knees bent up under the chin, and the face turned towards the east. Various articles of personal property were next placed beside the corpse, clothes, ivory, guns, axes, hoes, etc., and the mouth of the cave closed up with wooden posts and a strong reed mat. The grave was then filled in and the surface
[768] carefully finished as we have seen. At the head of the mound a native pot was fixed in the ground for the reception of the offering of beer which is an almost invariable accompaniment of any act of worship paid to the *malungu* of the dead.

769 Such a shrine marks the grave of almost every Yao chief or headman, and is
[775 regarded as the abode of his soul or the spot where his *malungu* is most accessible.
622] If his successor is about to undertake a long journey or enter on any warlike expedition against an enemy or neighbour, he must first *kutopa mbepesi*, place an offering here to secure the favour and assistance of the *malungu* of the dead. Should a long-continued drought endanger the prospects of the grain crop, the departed chief must be solicited to send the lacking rain. A feast is first prepared, almost always of beer, sometimes with the addition of native porridge, fowl, or game. The worshippers gather round the shrine bringing part of the food which they have prepared. Their priest for the occasion is the successor of the dead chief, sometimes one or other of the *awile* who placed the body in the grave, or it may be that any other near relation of the dead man is chosen to represent the people and act
[602] as their spokesman. The nearer the relationship the more influence will he have with the dead.

7: Hetherwick M-5 (ca. 1900) 1902 FT7 Yao FT7

with the dead. He approaches the shrine, opens the gate of the fence, takes a pot'ul of beer and pours it into the pot at the head of the grave. Next he places the basket of porridge and the plate of meat on the mound beside it and retires. Kneeling down outside the gate facing the shrine and a few yards in front of the people he chants his prayer in a monotone, each petition commencing with "Chonde, chonde," "Please, please." All the while the people clap their hands in unison with him and sing the responses as they do in a native case in the chief's court. 769

When the offering has been made at the grave, the rest of the beer or other food is consumed by the worshippers. Guns are fired as a token of respect to the dead, and the rest of the day is spent in dancing. [635]

Such shrines are to be seen in almost every Yao village where the inhabitants have been located for any length of time. They are regarded with awe—the little boys as they pass whisper to each other in a warning tone, "mawka." Should the village be moved to any other district, the old shrine is not forgotten. Periodical visits are made to it with the usual offerings. In cases where the old home has been occupied by a people hostile to the old inhabitants, such visits are usually made during the night, and the people awake in the morning to find that the old chief's grave in their midst has been newly repaired, and a fresh offering of food placed at its head. 778 769

Sometimes such shrines are found on the summits of hills which once may have been a refuge from the enemy in time of war, but which now lie bare and deserted. Thither in their need the people make their way with their offering of food and beer, and their prayer for rain or suitable weather for the crops. Near Blantyre such shrines are to be seen on the tops of Mount Sochi and Mount Michiru. The former is the abode of the spirit of Kankhonde, and the latter of Mpulale, both old Maravi or Mang'anja chiefs who doubtless fled there seeking safety from the war of the invading Yaos, and died leaving their wonde to be the mafungo or spirit of the mountain. Some years ago, during the fear of an Angoni invasion, the Yaos of Mount Sochi fled to the hill-top for refuge, and there the old chief Kapeni died. He was buried close to the grave of the old Kankhonde, and now, when the Yaos on Sochi make an offering, it is to the spirit of Kapeni that the homage is paid, and the shrine of Kankhonde lies neglected.

Only the graves of chiefs or headmen are thus treated as shrines of worship. The burying place of slaves and the common people lies away in the thick bush, where only the rank grass or the thicket of old trees marks the spot. No offerings are ever taken there, for such as are buried there can have no influence in the spirit world. The dead are buried, the broken pot or basket is left on the grave to mark the spot, and none ever seek to go there save to lay another in the same neglected ground. 554 764 769 778

II. But the word mafungo is used by the Yao with a wider application. Etymologically the word is connected with the root *lufungwa*, which in so many of the other branches of the Bantu tongue appears as *lufu* or *kuru*, and signifies "great" or "old." It is the same root which appears in the Kafir word for God, 776 197 192

10: Sanderson D-5 (ca. 1920)1922 FT7 Yao FT7

A Note on Ceremonial Purification among the WaYao, Nyasaland.

55

By Meredith Sanderson, M.R.C.S., F.R.G.S.

One of the effects of European influence in Africa is the breaking up of tribal organization and discipline. The rights of the individual being no longer subordinated to the common good, customs formerly observed by the village community as a whole die out, while those affecting the individual are still practised. 191

This tendency is well seen in the ancient ceremonies of purification among the WaYao which are now *rarely* performed collectively, though the native, however highly "educated," still goes to the doctor to obtain the necessary medicines for removing, for instance, the contamination caused by contact with a corpse. [75] [764]

These collective ceremonies have already been described by various writers in respect of both Nyasaland and elsewhere,* but the Yao rites have not, I think, been given in detail, and the following notes may not, therefore, be altogether valueless. 114

The *Pyajila* ceremony (*kuppajila*, "to sweep") is common to most Bantu tribes. In its simplest form it used to be performed annually by the WaYao, at the beginning of the twelfth month, outside of the months (lunar) being kept by means of a "calendar."‡ The whole village is thoroughly "spring-cleaned," all rubbish 796 [191] [805]

* At Sia, where the game is played on All Souls' night in the society, Father Barnabas Nyaw tells me, the song in Spanish runs:—

Yaso, yaso, quando te vengo,
Yaso, yaso, hoy nada.

Yaso, yaso, where you come.
Yaso, yaso, I shall not be there any more.

Words imported, presumably, to the hidden hall.

† *See* Swanson, M. C., "The Sulu Archipelago," pp. 339 341, XXIII. *Annual Report, Bureau American Ethnology*, 1904. 000

‡ Fraser, "Golden Bough Bowdich," II., 170, 000

§ A "calendar" consists of a string tied to two pegs in the wall of the house, or between two poles, on which are threaded twelve pieces of reed, bamboo or cornstalk. One of these is moved to the other end of the string each time a new moon is seen. [211]

10: Sanderson D-5 (ca. 1920)1922 FT7 Yao FT7

The men and boys now pass through the arch in order of seniority; each splashes himself with the water in the trough, but neither speaks nor rinses the mouth. The women come next, led by the head-wife of the chief; the latter rinses her mouth and, instructed by the doctor, repeats a prayer similar to that offered by her husband. The remainder of the women merely splash themselves, like the men, before passing through the arch. All then return to the village, where the *ppejile* is continued. 751 796

Finally the doctor takes the hammer-head from the trough and hands it to the chief, who rubs the haft into it, and, a hoe having been placed on the ground, goes through the form of forging the latter by beating it with the hammer. He then scrapes the ground with the hoe as if clearing a piece overgrown with grass; he does not dig with it as in hoeing up the ground for planting seed. After this rite the chief again bathes in medicated water similar to that in the trough, and the ceremony is complete.

Whereas the *ppejile* ceremony and its adjunct, the rite of the arch, are now [178] but rarely performed, no Yao will omit the rite of purification after a death in his 751 family. This ceremony consists of two essential parts, both protective against 764 the *ndoko*, a disease characterized by dropsy and supposed to be contracted by 796 contact with a corpse, or by association, especially by sharing a meal, with those who 783 have been in such contact. The first of these parts is bathing in certain medicines, which protects the bather from *ndoko*, and the second consists of a sort of communion meal, shared by all friends and especially relatives with those who have been contaminated, and designed to protect these friends and relatives.

The decoction for bathing is made by soaking the roots of *Impatiens* and 751 *Sanicula* in water, together with the bark of *mkwaru*, one piece each from the 783 east and west aspects of the tree; the water assumes a reddish tint, and the whole 8251 body is bathed. 765

The communion meal consists of porridge made from any kind of flour or of [262] rice, and some squash beans. In the latter some scorched and powdered root of *mtondongolelo* is mixed, with a little salt. All near relatives of the deceased must partake of this meal, as well as their wives and their near relatives; part is carefully put aside for the use of any relative unable to be present at the ceremony.

Latterly, since the spread of Islam among the WaYao, this rite has become [177] confused with the distribution of food to the poor at the funeral of a Muslim, and [797] the Arabic word *sadaqa* ("charity") is now generally used for it, to the exclusion of its wider, correct meaning.

It may be mentioned here that after the death of a child the father is denied 765 access to his wife for a period of about three weeks, and the first act usual to one 797 of coitus interruptus.

MEREDITH SANDERSON.

2: Mitchell E-5 (1946-1949) 1956 FT7 Yao FT7

disease *ndaka*.[1] This disease, as we have seen, affects the sexually inactive when they are brought into contact with those who are sexually active. But the disease will only affect the members of the matrilineage of the errant person. For example, suppose a labour migrant is coming home from Southern Rhodesia and has, among other things, a few pounds of salt in his baggage for a gift to his relatives. Suppose also that while he is returning he has promiscuous intercourse. The salt becomes charged with sexual heat and if he gives it to any of his matrilineal relatives to cook with, they will contract this disease. He must therefore give the salt to members of another matrilineage, even if they live in the same village. 613 753

It is when the unity of the matrilineage is threatened, by either death or division, that its mystical value appears most clearly. When a member of the matrilineage dies the whole matrilineage is thrown into mourning and remains continent for three days. On the fourth day they perform a ritual purification and some members resume sexual relations, but the closest matrilineal relatives, such as the mother and uterine siblings, remain continent for the remainder of the mourning period, which is about 36 days. 613 765 834

It is tension within the lineage which is most closely attended by dire results. The most important reflex of this tension is accusations of sorcery. Good relationships among members of a matrilineage are adjured, mainly because friction opens the way to sorcerers. The Yao believe that sorcerers kill their matrilineal relatives so that they may share the flesh with other sorcerers. The sorcerer is fundamentally a wicked person and may kill any relative but is more likely to kill those whom he hates. Hence it is most important that relationships are kept amicable within a matrilineage for fear that sorcery ensues. 613 626 754

An interesting variation of the dangers of sorcery is the belief that sorcerers take the opportunity of squabbles within a matrilineage to kill one of the members. The rationale behind this is that the diviner's instruments are unable to detect the origin of the sorcery beyond the immediate cause. A diviner will indicate that the cause of death of, say, a child is sorcery, but that the witch is obscured behind the quarrelling words of some relative. Consequently, danger to a matrilineage ensues when one of its 613 754 578 626

[1] See Chap. V, p. 111.

3:Stacks D-5 (ca. 1912) 1922 FT7 Yao FT7

764 203

person, he may also give a goat. The calico is to wrap up the body of the dead, the goat is for the undertakers, *ausia*.[1]

764 [769]

Until eight or ten years ago, the Wayao buried their dead in a posture of complete flexion. The preparation of the body after death is carried out by friends from a neighboring village who volunteer for the service. They are known as *ausia*, (sing. *ushia*). Macdonald[2] thinks the word originally meant relatives; it has essentially the opposite meaning now. The corpse is washed in ordinary water and no anointment is made. The limbs, formerly, were then flexed on the body and at all the joints. The clenched hands were placed under the chin of the bent head or the hands were spread over the face of the flexed head, while the legs were tightly bent at the knees and brought up close against the abdomen. The corpse was securely bound in this position and adorned with a loin-cloth of bark. The body of a man found stiff and extended was a source of great trouble. Water was heated, and the body bathed until it was as relaxed as possible. As much force would then be applied as was necessary to gain the required degree of flexion, the bones often being broken in the process.

[769]

In the case of a woman, her female friends put on her bark-cloth loin covering, but the washing and trussing up of the body were usually done by men unless there were some women particularly skilled in the operation.

The flexed body was then set up on the deceased's sleeping mat within the hut, and from time to time, so long as it remained exposed, it was washed, people coming from other villages to offer their services for this task. Watchers sat continually by the body, the wife and perhaps a brother on either side, while others slept in the hut to take their turn later. The rest of the mourners sat on the veranda about the door.

765

As soon as the *ausia* had finished their work, wailing began, started by the wife and carried on by all the women of the village and the women relatives from elsewhere. Wailing continued all day until about ten in the evening, and then started again between two and three in the morning. This went on for three or four days or was intermittent for a longer time, always recommencing with the arrival of a party from another village. I have never heard of flour being put on the heads by Yao mourners, as mentioned in *Africana*.[3]

[769]

News of a death was always sent to all the relatives, and burial might be delayed to allow for the arrival of those from a distance. Under such circumstances, the body was enclosed in a casing of bark, the ends being closed by bamboo pegs. Exaggerated signs of grief were sometimes made by the mourners who beat their breasts with their hands while they knocked their heads against the ground or a wall, but the Yao did not indulge in the excesses of the Anyanja near Lake Chilwa who practised a kind of flagellation, the wailers within the house scolding any new-comers at the door and beating them with sticks. This treatment was not resented. Women alone did the wailing; a man indulging in such expression would be laughed at. His part in the old days when the natives possessed firearms was

[1] Vide infra, p. [illegible]. [2] Op. cit., vol. I, p. [illegible]. [3] Ibid.

765 [539] to fire off his gun as long as his powder lasted. During the period of mourning, drumming went on continuously, *chindindo* being played on the three small drums called *ishoma*.

With the exception of the final attitude of the body, the foregoing description is a correct account of what happens today. The body is now fully extended.

767 764 The *ovile* are two or four in number, although other friends may assist in all their services. On about the third day, the *ovile* sew up the body in bark cloth, completely enveloping it; a bamboo needle is used and left sticking in the cloth at the last stitch. The body is then enclosed in a mat slung on a pole, and carried from the hut to the grave. First, the procession makes a round of the village, passing by all the houses which the dead man used to visit, and over all the paths he used to cross. His children and those of his relatives under seven or eight years old gather in the village, and throw pieces of charcoal toward the body as it passes, "so that they shall forget the dead man," or run after the corpse, while some one sprinkles medicine over them.

764 [539] As the procession leaves the village, it is headed by the drums playing *chindindo*, but after a few hundred yards, only the *ching'ongo* drum, now called *chimoda*, beats time for a short distance; the procession then goes on quietly. Following the drums, walks the mother or another relative carrying flour with which the grave will be marked out. Behind this mourner, the body is borne by the *ovile*. The *ovile* are always the first to carry the body, but are later relieved by other friends of the deceased; no one would ever ask to be relieved.

[114] After the chief mourner, follow the other relatives and friends, the men first, the women behind. Boys just back from their *unyago* attend to learn the customs. All the relatives of the deceased go to the burial, contrary to Macdonald's account.[1]

In this order, the procession reaches some two thirty or forty yards from the place of burial where the corpse is put down in the shade, *ntale*, "resting place", and while the women and part of the men watch beside it, the *ovile* proceed to the burial place. They cut branches from a sacred tree, and strew them on the path. On approaching the appointed spot, they clap their hands in salutation, asking that the burial ground be opened to them.

The head *ndole* chooses the site where the grave shall be dug, after which the mourner marks out the limits with the flour she has brought. In the days when the body was buried in contracted posture, a circular grave was dug just big enough to allow two men to work in it. Eight feet was the usual depth but this was decided by the deceased's spouse, if he were living, otherwise, by his near relatives. In the east side of this circular well, a cave was excavated, just large enough to admit the contracted corpse. When all was prepared, the body accompanied by all the mourners, was brought from *ntale* to the graveside. The chief *ndole* with a friend of the man's family and one of his wife's, standing in the grave received the body and placed it in the cave, resting on a mat and covered with bark cloth. The body lay on its side with its back toward the well, and its face looking

[1] Op. cit., vol. I, p. 188.

3: Stannus D-5 (ca. 1912) 1922 FT7 Yao FT7

764

toward the east. After adjusting the body in its place, the adults would tear open the shroud over the ear, and pour on to the pinna some powdered beads to be used by the dead man as money in the hereafter. Except in the case of chiefs, no objects were buried with the dead, contrary to Macdonald's description[1] of the Amangoche. The pole on which the body had been carried to the grave was broken into bits and together with any stick that had been used to measure the body for the cave, was placed in the grave. The opening into the chamber was then closed by a mat fastened over it by pegs and supported by pieces of wood. The male chambering out of the well, pushed the first earth backward into the grave with their elbows, after which the rest of the earth was shovelled in quickly, and a heap made at the surface. The ground about this mound was swept clean with a bunch of leaves by some one walking backward so that no footprints were left; the bunch of leaves was thrown on top of the mound. No medicine was put in the grave, nor were the household utensils placed on the mound, as Macdonald states concerning the Amangoche.[2]

[114]

[114]

For some years past, the type of grave made among the Yao has resembled that of the Anyanja,[3] a long pit with a chamber scooped out along the whole length of one side. In this, the corpse is placed in a fully extended position so that it lies on its back with the feet toward the east. With this exception, the account given above holds good for the present day. The method of suspending the corpse in a mat slung on forked sticks within the grave, mentioned in *Africana*,[4] is not found among the Amachinga Yao.

On the way back to the village, two male lead, followed by the men, the women, and lastly, by the other male. First, all wash, the men upstream, the women downstream; no one may wash another's back. The hoes used in digging the grave are also washed; hoes are never washed on any other occasion.

764
783

During the funeral, some responsible old man is left in charge of the village with several younger men to assist him. Just before the return of the funeral party is expected, the old man sends one of the younger men to set medicine at the side of the path along which the mourners will pass. This medicine is made from the bark of the *mpingo* tree and is used for purification; it is placed in a shard. Each person as he arrives at the spot squats down, dips the little finger of each hand into the medicine, and passes the fingers between the little toe and the third toe of the corresponding foot. The last comer throws any remaining medicine into the bush. As they near the village, a gun is fired and wailing is resumed for a few minutes, after which it ceases altogether. The old man who has been left in charge of the village always inquires whether all has gone well at the interment.

[834]

That evening, the time is passed in singing *chinduindu*.[5] All those who attended the burial, sleep in the village, and if the deceased's relatives can afford to provide the necessary food, all remain in the village for a number of days equal to the period which elapsed between death and burial. Sometimes, when burial was long delayed, the mourning party

765

[1] Op. cit., vol. I, p. 187.
[2] Ibid.
[3] Stannus, 'Notes on natives of British Central Africa,' op. cit., p. 313.
[4] Macdonald, op. cit., p. 186.
[5] Vide infra, p. 267, 270.

3: Stanzas D-5 (ca. 1912) 1922 FT7 Yao FT7

765 might not break up for a week, but the practice was often modified to some degree, people returning to their homes during the day and coming back each night to sleep in the deceased's village. At the present time, there is a tendency to cut the proceedings short, and the mourners generally disperse on the second day after the funeral. This period of waiting is usually whiled away by playing and singing *chindimba*.

768 On the day before the company leaves the village — now, often on the day after the 765 funeral — the ceremony of shaving the head takes place. The *ausile*, assisted in the case of a large party, by those who helped at the burial, shave the heads of all the dead man's relatives. When this is completed, they begin to tear down the deceased's house. The grass from the roof, with the hair removed from the heads of the relatives, is carried to the cross-roads and burned. The walls of earth are torn down and made into a heap; on the top, a stick is raised, and at its base is placed the dead man's snuff box. Sometimes a cactus euphorbia, *upachi*, is planted on the mound and cassava round about. The snuff box is kept replenished with snuff. This, with the cassava, is reserved for the *ausile;* no one else may partake of them.

While the house is being pulled down, the chief *ubile* ties around the neck of the widow a single string of beads or a small piece of calico, *ng'enji*. After the house has been demolished, the *ausile* return to their homes and on the following morning, everyone else departs.

767 The position of *ubile* is a strange one. Every man in the course of his life probably acts as undertaker for some friend; many have probably performed the service several times. He receives no regular payment, but beads, and, nowadays, coins are often thrown into the pot of water with which he wets the heads of those he shaves after the funeral, and he has the freedom of the village in which he has so acted forever afterward, the degree of freedom being determined by the distance which he has travelled to officiate. When Wandalama died, a headman named Chisui from Makanjila's on Lake Nyasa, over a hundred miles away, acted as one of the *ausile*. The occasions on which he revisited Malemya's village are [431] well remembered, as they were marked by much frolicking and some obscenity. He was the recipient of enormous presents of fowls, sheep, and anything else he cared to take, and having commandeered men from the village to carry these gifts for him, he would leave, accompanied by all the people, yelling and shouting their joy at seeing him again.

Any fowls or other provisions that friends may present to the deceased's relatives at the time of the funeral to help defray expenses are given to the *ausile;* no one else may eat them. Some may be kept against the next death in the family.

A few days after the funeral, recourse is had to the chief to settle whether any action 769 must be taken in regard to the cause of the death. Some near relative of the dead man will 622 be chosen for this purpose; he must not be shaved by the *ausile* at the time of the funeral. The consultation takes place at some secluded spot outside the village. The chief always brings some one with him to witness what is said. On arriving at the appointed place, the chief salutes the unshaven mourner who is probably accompanied by other relatives, and

3: Stannus D-5 (ca. 1912) 1922 FT7 Yao FT7

then listens to an account of the circumstances attending the illness and death. The point 768
at issue is whether there is any evidence pointing to death from unnatural causes which 622
requires consulting a diviner. The chief practically always agrees with the relatives, and it is said that he will never press them to go to the *wachisanga* unnecessarily. The case may end with this conference, or here may begin the long series of events described under *usawi*.[1]

During the month subsequent to the funeral, certain taboos have to be observed. The 765
widow may not bathe, and with the exception of the *awilo*, all who attended must refrain 768
from sexual intercourse. At the expiration of this period, beer is brewed in the village, and all the friends and relatives are again summoned. This beer-drinking is called "the beer of rottenness," or "the beer of resignation." In addition to the beer, food is provided, and everyone helps himself without ceremony. *Chindimba* is sung and danced and at the present day, bands of trained dancers attend, including *ching'wenyeng' wenye*.[2] A pot of beer is sunk into the ground, marking the site of the dead man's house. The night of *matapata*[3] [833]
sees husbands and wives reunited, and the widow may go through ceremonial intercourse with a man appointed for the purpose called *lituna* or *mbilo*. Sometimes the widow refuses *lituna*, and is given medicine instead to cleanse her; her body is then no longer "hot" and likely to bring disease to those about her. A widow does not marry again for two or three 587
years. A young man who loses his wife has no longer any standing in her village after 768
matapata. He is usually given a present, with the suggestion that he go elsewhere. After the death of an infant, the mother is considered unclean. She sleeps on a mat apart from her husband till after the ceremony of shaving, and then undergoes a ceremonial coitus with her husband — in which case he is called *lituna* — after which, ordinary cohabitation is resumed. If she has been a widow, or if the child was born "with disease,"[4] another man acts as *lituna*.

The morning following *matapata*, all the fires in the village are extinguished. A fresh 769
blaze is then kindled with the fire-drill, *lumangu*, either in the chief's house or in some spot [372]
nearby, and from there, fire is carried to all the houses. The ashes of the old fires, the stones supporting the cooking pots, and the porridge sticks are taken to the cross-roads, and there destroyed. Everyone then shaves all his own hair, head, axillae, and pubis. [302]
The custom of the second shaving by the *awilo*, described in *Africana*,[5] is, I think, an adaptation from the Anyanja. A year later, beer is again brewed, and all the relatives summoned to the village to partake of it. There is dancing, but no ceremony.

The Yao bury their dead in regular graveyards in wooded country, the thicker the 764
forest the better, often two or three miles away from a group of villages. Different villages bury their dead in different parts of the burial ground; relatives are usually buried near one another. Graves are never revisited, and no one would enter a graveyard except at the 769
time of a funeral, and then only after obtaining permission from the chief. Such spots are

[1] Vide infra, p. 268.
[2] Vide infra, p. 270 and Pl. I.
[3] Beer-drinking.
[4] Vide infra, p. 268.
[5] Macdonald, op. cit., p. 111.

10: Sanderson D-5 (ca. 1920)1922 FT7 Yao FT7

The man and boys now pass through the arch in order of seniority; each splashes himself with the water in the trough, but neither speaks nor rinses the mouth. The women come next, led by the head-wife of the chief; the latter rinses her mouth and, instructed by the doctor, repeats a prayer similar to that offered by her husband. The remainder of the women merely splash themselves, like the men, before passing through the arch. All then return to the village, where the *pyajila* is continued. 751 796

Finally the doctor takes the hammer-head from the trough and hands it to the chief, who refits the haft into it, and, a hoe having been placed on the ground, goes through the form of forging the latter by beating it with the hammer. He then scrapes the ground with the hoe as if clearing a place overgrown with grass; he does not dig with it as in hoeing up the ground for planting seed. After this rite the chief again bathes in medicated water similar to that in the trough, and the ceremony is complete.

Whereas the *pyajila* ceremony and its adjunct, the rite of the arch, are now but rarely performed, no Yao will omit the rite of purification after a death in his family. This ceremony consists of two essential parts, both protective against the *ndaka*, a disease characterised by dropsy and supposed to be contracted by contact with a corpse, or by association, especially by sharing a meal, with those who have been in such contact. The first of these parts is bathing in certain medicines, which protects the bather from *ndaka*, and the second consists of a sort of communion meal, shared by all friends and especially relatives with those who have been contaminated, and designed to protect those friends and relatives. [178] 751 764 796 783

The decoction for bathing is made by soaking the roots of *lugulambuti* and *lumlemela* in water, together with the bark of *mkomaa*, one piece each from the east and west aspects of the tree; the water assumes a reddish tint, and the whole body is bathed. 751 783 824 765 [262]

The communion-meal consists of porridge made from any kind of flour or of rice, and some *ngunda* beans. In the latter some scorched and powdered root of *mandanyelele* is mixed, with a little salt. All near relatives of the deceased must partake of this meal, as well as their wives and their near relatives; part is carefully put aside for the use of any relative unable to be present at the ceremony.

Latterly, since the spread of Islam among the WaYao, this rite has become confused with the distribution of food to the poor at the funeral of a Muslim, and the Arabic word *sadaqa* ("charity") is now generally used for it, to the exclusion of its wider, correct meaning. [77] [797]

It may be mentioned here that after the death of a child the father is denied access to his wife for a period of about three weeks, and the first act must be one of *coitus interruptus*. 765 784

MEREDITH SANDERSON.

1: Tew E-4 (no date) 1950 FT7 Yao FT7

never to have had any large-scale central political organization, and their history is full of occasions when one group of Yao has attacked another. Even within his own area the authority of the chief was not, apparently, sufficiently strong to prevent one village headman from raiding his neighbours; the chief maintained no standing army.[1] The chief held certain rights and privileges. He was entitled to the ground tusk of any elephant found in his territory (the finder was rewarded after it had been sold, with a cloth); he received tribute in food,[2] with which he entertained visitors. He took a share of the spoils of war and was also entitled to annual labour service and to a gift when he made a new burial place. Apart from his military and judicial responsibilities, he had authority to settle when and where initiation ceremonies should be held.[3] The right to hold these ceremonies was sought after by the village headmen as a mark of status.[4] The chiefs or headmen of certain families had the right to wear a white cloth bound round their temples as insignia of rank.[5]

In addition the chief had a certain ritual status. He was thought to incur mystical danger by contact with death, and so was not allowed to attend a funeral nor to eat a chicken brought by a messenger announcing a death, nor to accompany his military expeditions. He was supposed to have great power through special medicines. He had to make offerings to the ancestors, especially in affairs concerning the whole people, such as drought or epidemic. He was expected to give a burial cloth at the death of an important man. At his death a period of social disorganization was recognized, members of his village were allowed to pillage and rape, until he was buried.

Succession to the chiefly office was matrilineal. The chief's position was based partly on his status as the senior male of his own matrilineal kin group, partly on his wealth. His command over slaves, guns, and caravans to the coast was greater than that of others, and from these his military strength was derived, for a chief was powerless without his following of dependents. The chief of the area was also headman of his own village. In fact, the position and duties of a village headman (except that he could not exact tribute)[6] reproduced in small scale those of the chief. The headmen also were in mystical danger through contact with death and were the channel through which the ancestors were approached in affairs concerning the village. They, too, built up their prestige and wealth by slaving activities. They seem to have been largely independent of the chief, carrying on slave raids of their own, and if they could gain a sufficient following, they might break away from the chief, and set up their own chiefdoms.[7]

The chief ruled through a hierarchy of headmen. His councillors were superior headmen, placed over a number of village headmen. Commoners could approach the chief only through the councillor in whose area their village belonged. The councillor's special duties were to report daily to the chief on the affairs of his district, to advise, and to arbitrate in the chief's own domestic affairs, e.g. in conflicts between the chief and his brothers and nephews. The councillors were not necessarily relatives of the chief,[8] but were chosen on account of their general status in the community, and their

[1] Elmslie, 4, 1899, p. 105, says of the Yao in the Shire highlands: 'Every tenth man one met might be set down as a chief . . . petty quarrels of petty chiefs were abundant. . . .' See Macdonald, 1882, vol. i, pp. 169 and 154.

[2] Stannus, 4, 1922, says that only beer was owed to him.

[3] Ibid., p. 279.

[4] Duff, 1903, p. 312.

[5] Macdonald, 1882, vol. i, p. 16; Werner, 1906, p. 260.

[6] Macdonald, 1882, vol. i, p. 153.

[7] Ibid., pp. 32 and 156.

[8] Ibid., p. 156.

1: Tew E-4 (no date) 1950 FT7 Yao FT7

764 performed these services used to enter a special relationship of privileged familiarity with
767 the village of the dead. This has died out in Nyasaland, but accounts of *Utani*[1] among the Yao at Masasi and Songea suggest that something of the kind is still practised.

766 Chiefs and headmen are not buried outside the village, as are other persons. They used to be buried before their own huts, but now in the centre of the village. Shrines were raised over their graves, at which offerings of beer and flour were made. If the village was moved the pot of beer sunk into the ground at the chief's grave was also removed and reinstated at the new site. A dead slave was buried by his fellow slaves; normal rights of sepulture were denied to suicides and to persons who had died in taking the poison ordeal (that is, convicted sorcerers).[2]

OTHER DISTINCTIVE CULTURAL FEATURES

301 The Yao have a tribal mark of two short cuts on each side of the face between the
304 eye and the ear.[3] Their women did not wear the *pelele*, lip-ring, although their neighbours the Makua and Makonde did;[4] the fashion seems to have spread to south Nyasa
[171] in the 1880's, as many travellers commented on it, without distinguishing whether the wearers were Yao, Nyanja, or Lomwe.[5] The women used to pierce the left *ala nasi* and insert a metal or lead stud, *cipini*.[6]

MAKUA-LOMWE

TRIBAL AND SUB-TRIBAL GROUPINGS AND DEMOGRAPHY

000

NOMENCLATURE

The *Ma-* in *Makua* is not a prefix, but part of the name, Variant spellings are *Makwa*, *Mahoa*, *Mahoane*. They are sometimes referred to by the name of one subdivision, the Medo Makua, and called *Ameto* or *Meto*.[7]

The *Lomwe* (also spelt *Lomuei*) are called *Alolo* by the Yao, and are also frequently called *Anguru* (*Nguru*) which is an old name for the people of the region.[8] Any of the Makua-Lomwe peoples who have migrated into south Nyasaland are collectively termed *Nguru* in official reports; Nguru is a hill in the region of Portuguese East Africa, whence they come, but they should not be confused with the Nguru of Tanganyika.[9] Another name for them is *Acilowe*.[10] *Alolo* is incorrectly applied to all the Lomwe; it has a stricter application to the Cuabo from Quilimano.

[1] Scrivenor, 1937; Moreau, 1941; Spies, 1943.
[2] Main sources for burial are: Johnson, 5, 1922, pp. 28–30; Stannus, 4, 1922, pp. 240–6; Abdullah, 1919, pp. 19–21; Duff, 1903, pp. 322–4; Macdonald, 1882, vol. i, pp. 110–12.
[3] Murray, 1932, p. 153.
[4] Thompson, 1882, pp. 77–8, writing of the Yao of the Ruvuma valley.
[5] Macdonald, 1882, vol. i, pp. 16–17; 'around Blantyre hardly any woman is without it'.
[6] Stannus, 1, 1910, p. 316.
[7] *Handbook of Portuguese Nyasaland*, 1921, p. 39; Murray, 1922, p. 56; Weule, 1, 1909, p. 259; Livingstone, 1874, p. 32.
[8] Theal, 1899, pp. 415–17; Gaspar Bocarro passed through Manguro country. Burton, 1873 (Lacerda's Journey, 1798), mentions Manguros.
[9] Abraham, 1931, p. 15; Murray, 1922, p. 46.
[10] Johnson, W. P., 4, 1894.

2: Mitchell E-5 (1946-1949) 1956 FT7 Yao FT7

of the ancestors of the chief are supposed to affect the welfare of the initiands. Though some village headmen may conduct initiation ceremonies they are unable to offer rain-prayers. These are offered by a chief on two occasions. The first is in November, before the rains have started. The chief's wife and some women from the bigger villages in the near vicinity of the chief's village gather at his hut. They brew beer—*ukana wacisoka*, the beer of the spirits—to be used as a libation. At sunset on the appointed day the chief goes to the shrine tree where some headmen have gathered, and pours some of the beer into a pot, partly buried at the root of the tree, while he invokes all the spirits of his departed ancestors—mainly matrilineal but occasionally some patrilateral. He then entreats the spirits to send some rain and to look after their 'children' in the land. Sometimes a length of calico is hung on the tree as an extra offering. Should no rain fall the chief will have to repeat the offering until it does fall. When the rains have ended in March he makes a second offering 'of thanks'.

In the context of the present discussion, the important point is that it is only the chief who can make this libation and offer this prayer. If his plea fails the whole area starves, and no headman may supplicate his ancestors on his own behalf or approach the chief's ancestors through his own ancestors. The grain for the beer comes from the various villages, but not on a fixed rate of levy. Some villages never contribute. The chief buys the offered cloth on behalf of his people. When in 1948 the cloth on the shrine tree was stolen, Chiwalo imposed a levy on the village headmen in the area so that a new cloth could be bought. Here the boundaries of the chiefdoms are important, and no headman outside Chiwalo's area was approached. A village headman from Jalasi's area, though geographically much closer to Chiwalo, relies on Jalasi's rain-offerings and may not approach Chiwalo or plead with him to offer a rain-prayer to his ancestors.

Another ritual situation in which the limits of the chiefdom appear is during the institutionalized pillage on the death of a chief. I have not been in any area when the chief has died, so that I rely here on the tales of informants. During the mourning rites certain feasts are held. The food for the mourning feast of a commoner or village headman is provided from his estate

2: Mitchell E-5 (1946-1949) 1956 FT7 Yao FT7

766 by his relatives. For the feasts during the mourning at a chief's death the food is acquired by institutionalized pillage (*cipinimbe*).
661 The villagers in a chiefdom are often first informed of the death of a chief by the appearance of men from his village. These men are by custom allowed to take from a village any article of food they can find—flour, a goat, some chickens, prepared relish, or whatever is lying around in the village. The owners of the food may not charge them with theft. This food is used in the funeral feast. The excesses to which the chief's men may go became circumscribed after the White conquest. Previously, almost any crime short of murder could be committed under the guise of *cipinimbe*. More recently, owing to Government opposition, it has been restricted to the taking of smaller articles of food, such as flour and chickens. Some people are beginning to object even to this. The chief's funeral is a public affair and all his subjects may attend it. The effect of the *cipinimbe* is to bring together enough food for the chief's funeral feast. Here, as before, the chief's men may not cross the boundary for fear of reprisals, and the effect is to impose a levy in an informal way over most of the villages in the chief's area.

The Chief as a Symbol of Unity

643 The chief is a representative of his people and it is his particular duty to ensure their welfare and that of the chiefdom as
579 a whole. His symbolic representation of the unity of his people is brought out clearly by his right to fines in cases involving bloodshed and arson. Strife and division in a chiefdom in the old days were likely to end in spilt blood and burnt huts so that the Yao associate bloodshed and hut-burning with dissension within the chiefdom.

684 Most other offences are against the individual and not the chiefdom as a whole: the case is brought to the chief so that
685 compensation may be awarded. Adultery and theft thus are definitely civil offences. Nowadays, a fine is imposed, but this is seen to be a White innovation, and the money from it is looked upon as 'Boma' money.[1] In disputes where blood has been shed, however, the chief is entitled to fine the guilty party
682 on his own account. The chief is said to be 'blinded' by the
683 blood and a payment must be made to him before he may 'see'

[1] i.e. Government money.

2: Mitchell E-5 (1946-1949) 1956 FT7 Yao FT7

173 8a1 crop failures. Also I was told that important village headmen [166] are buried with their heads pointing to the east.

The Yao concept of the past is reflected in the principles of 173 political organization of these Machinga chiefdoms. The in- 554 vasion is the datum point from which rank mainly stems. We 622 may classify modern headmen into: those who were in the area before the Yao invasion, i.e. the Aborigines; the Invaders; and those who have come in since the invasion and have had to submit themselves to the Machinga chief, i.e. the Newcomers. The principle behind this classification of headmen is fundamental to Yao political structure. Stated most simply it is the rule that MacDonald quoted in describing the development of local organization: 'However large the settlement may become the man that is first in is the chief or headman.'[1] This is, of course, somewhat of a simplification, but the rule contains the essence of the principle. It was reversed for the Aboriginal Nyanja because the Yao subjugated them. But the claims of the Nyanja chiefs to rank because they had occupied the land first were recognized by the Yao who absorbed them into the social structure in positions of high rank.

425 But the principle holds among the Yao themselves, and for 554 the Nguru in their movements after the White conquest. The 622 operation of the principle is clearest in the structure of small local areas such as Chiwalo's. When Chiwalo's area was first settled, just after World War I, there were large tracts of unoccupied land. The first headmen to move into this region were Cigwaja, Kapaloma, Nyanje, Makata and Mumbwa. The local chief Chiwalo followed Cigwaja, but as Cigwaja was one of the Invader headmen under Chiwalo during the period of invasion, he now recognized Chiwalo as the chief. The area that is now Chiwalo's chiefdom was divided out among these five headmen. As other headmen came into the area they had to approach one of these five for land rights. These, when granted, were granted irrevocably in a block to the new village headman who then had sole rights to distribute the land afterwards. If he had the land to spare, he may have granted a portion of it to yet another village headman, and this action was also irrevocable. The land occupation pattern in any particular area is therefore extremely complex, because in addition to the village garden areas, indivi-

[1] MacDonald, *Africana*, i, 147. See p. 35 above.

2: Mitchell E-5 (1946-1949) 1956 FT7 Yao FT7

Arabic greeting to their seniors. This is done by placing the 622
left hand on the chest and bending slightly forward to the village 554
headman, saying, '*Subaye*'. The senior should then respond, 557
'*Alaye*'. Also, important headmen are usually buried in the 766
centre of the village, not in the common graveyard. The tomb of an important headman or personage, usually built of stones, concrete or brick, is called *nsati*. The right to bury in the village must be obtained from the chief 'because the land is his', and in Kawinga's area a fee of 6*s*. must be paid to him.

The Struggle for Government Recognition

Thus far, I have been discussing the ways in which the rank of 622
village headmen may be expressed. I now describe the way in 554
which these marks of prestige are associated in the three cate- 643
gories of headmen we have distinguished, and in what way the 648
competition between them is phrased. I have already described how all the chiefs in the areas to which I am referring are all successors of the original leaders of the invasions, and are usually the present Government representatives or Native Authorities.

The people must recognize the rank of chief because mystical beliefs prescribe activities in one direction, and because the limiting structure of the White Administration does so in another. A village headman cannot hold initiation ceremonies without the permission of the chief because of the mystical sanction, but the chief also has legal authority over his subject headmen. He as Native Authority is recognized by the Government and is its representative to his people. The Native Authority Ordinance (1933) specifically imposes penalties on those who do not recognize the authority of the chief. Under Section 12 of the Ordinance, the Native Authority may arrest without warrant any person who is accused of failing to obey his order or direction, interferes with his lawful duties, professes to be a chief or assumes the duties of a chief without Government approval. Under Section 13(*i*) severe penalties are imposed on any person who conspires against or in any way attempts to undermine the lawful power and authority of any chief or Native Authority. His position is therefore greatly strengthened against the village headmen and I have been told of one or two prosecutions by chiefs under this section. Nowadays, the mere threat of

3: Stannus D-5 (ca. 1912) 1922 FT7 Yao FT7

or a girl who has just returned from *Chiputa* must not touch the child, as it is said, "Her body is hot and would give fever to the child." To guard against such a happening, some "clean" woman, after handing some beads to the mother, will ask to be allowed to take the infant. This indicates that should it sicken, the beads will pay the medicine-woman who comes to cure it. The mother and baby are simply washed in water and are not treated with medicine, unless meconium has been voided before the child was delivered.[1] If the infant dies before it is presented to the outside world, it is disposed of in the same way as a stillborn child, i.e. buried in the ash-heap. About the tenth day, the baby is adorned with a girdle of beads and two little pieces of stick obtained from a medicine-woman to make the infant grow fat. 846 [845 766] [856]

The length of time during which the father and mother refrain from cohabitation after the birth of a baby varies greatly according to circumstance. Four months is probably a minimum, while two years, during which the woman suckles the child, is the common interval. After the first coitus, the man and woman wash themselves and the baby is bathed in the same water to prevent any ill coming to it. 833

Suckling often continues much longer than two years. If the mother dies, the child may be suckled by the grandmother, an aunt, or some other woman, but the breasts must first be treated with medicine or the child would die 853

A child born breech first is called *salanga*, a word which is also used to denote a variety of domestic fowl which always has the appearance of having its feathers ruffled. A child who dies before the father and mother have resumed sexual relations is buried in a graveyard apart from that of adults. The grave, dug with sticks, not hoes, is very shallow, and when it is filled in, a heap of stones is made above it. Only women attend the burial. A deep grave would cause the mother to go on losing children at an early age. The body of such a child is called *hiwau*, "hyaena." 845 766

A woman dying undelivered is placed in the grave in the usual way and then, before filling in the earth, one of the grave-diggers descends into the pit, cuts through the enveloping shroud, and incises the abdomen. One end of a long bamboo stick or reed is inserted in the incision and the other end is brought out to the surface of the grave. If this were not done, "many would die in childbirth." 844 766

Twins are not killed by the Yao but are well treated and always cared for equally. They are given similar clothing and food.[2] There is a story that the mother of Nkwamba, 845

[1] *Chinguru*, vide *infra*, p. 286.

[2] H. A. Werner, 'Among the Congo Cannibals, by John H. Weeks, London, 1913, a review,' (Man, vol. 14, no. 18, 1914, p. 18).

I take this opportunity of referring to Miss Werner's review in which, speaking of twins, she says, "They are always among the Anyanja given the names *Mapali* and *Nyama*." *Mapali* in Chinyanja refers to a kind of musical instrument and the Chiyao meaning is "successive pulse." *Nyama* is a Chiyao word which certainly means "the back." It is sometimes used of the second born twin but does not occur in Chinyanja. I have never heard of twins either among the Wayao or the Anyanja spoken of by these names. A mother carries the first born on the right arm and the second born on the left, but, so far as I know, she does not give a duplicate greeting nor make a habit of eating equally with both hands. [114]

3: Stannus D-5 (ca. 1912) 1922 FT7 Yao FT7

769 supposed to be the abode of spirits. Except in the case of chiefs, the Wayao never make any erections over their graves, like the Anyanja grass shelters, and the present-day Mohammedan earth imitations of Swahili tombs.

766 Chiefs, and the more important headmen, are usually buried in their own villages. Over the grave, a grass hut with a veranda is erected; the hut is covered with calico, and guns were formerly set in as veranda posts. Guns and ivory used to be buried with the corpse [567] but these Yao, I am told, never practiced the barbarous custom of burying slaves with their chiefs. Information of the death of a chief was always conveyed to other chiefs by slaves who were kept by the recipient of the message.

Since the time of the old Malemya, the corpse of a chief always lies with its head in the direction of the old chief's grave. The grave is swept around, and the house pulled down as in the case of an ordinary man, but the grave-hut is rebuilt every year and never forgotten.

Since the burial of the dead is more or less correlated with the idea of planting seed from which progeny will spring, the natives will not bury a leper, believing that if they did so, leprosy would spring up all around them. Persons dying of an epidemic disease such as small-pox are dealt with in the same way. In these cases and in that of a man dying of ordeal poison, the body is enclosed in a mat and put up in a tree, a manner of disposing of the dead common among the Anguru and some Anyanja. Concerning death from dropsy, similar precautions are taken to those in the instance of a woman dying in childbirth,[1] and a tube is put down to the body from the surface of the ground.

A leper feeling that the end is near, will ask to be put in a hut built outside the limits of the burial ground. Here, provided with water and food for a few days, he will wait to die near the graveyard wherein he knows he cannot be buried.

Anyone who is wounded with a spear or any other weapon is not taken into the village, [752] but is kept in a hut in the bush. If death results, the mourning ceremonies differ somewhat from the ordinary rites and are much curtailed.

Initiation Ceremonies. Under this heading I propose to deal with the three ceremonies, 881 *Lupanda*, *Chiputu* and *Litiwo*. They are occasions of great importance in the life of the native and their educative effect for the good of the tribe is far reaching.

At *Lupanda* (*Ndapala*) the young boys attend; at *Chiputu* the young girls go through their initiation and a side ceremony for young married men takes place, while *Litiwo* celebrates the first quickening with child. All the ceremonies are included in the word *Unyago*. Macdonald in *Africana* while referring to "the mysteries"[2] gives scant information about the ceremonies and has, presumably, without much knowledge of what goes on, condemned these customs like many others as furthering "absurd superstitions." He has failed to recognise that they are occasions when a large amount of useful advice is imparted, good manners are insisted on, and tribal custom is made known. Sexual questions are dealt with in these mysteries, and, though mixed up with a large amount of superstition, a

[1] Vide supra, p. 238. [2] Op. cit., vol. 2, ch. 7.

3:Stannus D-5 (ca. 1912) 1922 FT7 Yao FT7

against all evils — witchcraft, attack by lions, etc. The *akuwasi* then set about building 881
shelters in which the *wali* will remain during their term of instruction. According to the
number of the *wali* so the number of places where shelters are built may vary from one, two,
or three, to as many as eight. Each of these places is called *Ndapula*. They may be many [346]
miles apart and are so placed for the convenience of the mothers in various groups of villages
who bring the food daily to the group of boys from those villages.

The boys when they originally left the village were wearing a large bark-cloth covering,
with beads and calico, which latter articles have been taken by the *m'mikila* and his as-
sistants. At *Ndapula* they wear simply a loin-cloth of bark.

During their stay at *Ndapula*, the *wali* are given animal names by the *akuwasi* who [553]
carry on the instruction of the boys until their return to *Lupanda*, the *m'mikila* having
gone back to his village immediately after the circumcision. The names given to the boys [551]
are commonly names of beasts of prey such as Alikule (*likule* = the jackal), Achimwai
(*chimwai* = the leopard), etc.

Certain restrictions as to diet are laid upon the *wali* by the *m'mikila*, e.g. no meat of 881
an animal killed by a beast of prey, no mudfish, *likwabale*. He will not allow any villager 262
to visit *Ndapula* after seven P.M. and visitors may only be men who have been through the
ceremony. An uncircumcised man is called *mbulale*, one who has not been to his *Usapu*.

Other restrictions as to foodstuffs may be made by the *akuwasi*, generally in connection
with the mythical origin of such food substances. A finger-shaped yam called *lipete* is
taboo, as it is said to have first sprung from the grave of a leper, the inference being obvious.
After the *Usapu*, the boys have to undergo a special doctoring before they may partake of
them. Bananas and rice are similarly refused them, the latter on account of a story to the
effect that rice grew from the nostrils of a dead man, the idea doubtless having relation to
the resemblance of rice grains to maggots. Fish is denied them by some masters of cere-
monies, as it is said to have originated from the diaper of a woman which she threw away [825]
while bathing.

Each *m'mikila* may have special observances of his own. One near Zomba caused all
cassava to be roasted in a certain way. Rows of pieces of cassava were placed in split
bamboo spits and so roasted before the fire in the manner of fish. If roasted in the ordinary [252]
way, the cassava would split and show the white floury material inside, signified by the
verb *ku-lapala*. If this is eaten by the *wali*, it is said that the prepuital wound would reopen.

The length of time spent at *Ndapula* varies from four weeks to as long as three or four 881
months. In the first place they must wait till the circumcision wounds of all are com-
pletely healed. Delay may be occasioned by complications having arisen in some cases.
Again, permission to return may be withheld by the chief for some reason or other.
Should one of the *wali* die at *Ndapula*, the body is buried out in the bush and nothing [766]
is said to the parents until after the ceremonies are over and all have returned to the
village.

3: Stanna D-5 (ca. 1912) 1922 FT7 Yao FT7

village had its regular place of torture and *mumi* drinking, two or three miles from the village. Those used by Makanya, the old Ngoni chief, may still be seen. 754

A clear way is made two feet broad and fourteen feet long in the bush and here the accused takes up his position attended on either side by the two pleaders, the defending pleader on the right, the prosecuting on the left. Facing east or west or following the directions originally given by the caster-of-lots, that is, taking up the position in which the accused is supposed to take a midnight bath, or practise some rite under a tree or an ant hill, etc., he is given a decoction of *mumi* to drink from a gourd. This decoction is made on the spot, the bark being pounded up on a stone by one of the prosecutors. The accused must have had no food that day. He then starts to walk up and down the short cleared path with the two men, one on either side of him, the one saying, "Now you have drunk *mumi*, you shall die as you deserve; you did in fo-and-fo," the other denying the accusations, saying, "He shall vomit the poison." He is watched by the assembled crowd who note the various symptoms of which vomiting is the first and said to be the most characteristic. After this has gone on for some time, they watch for what is called the *ngungu* which is said to be "a ball of bile formed in the mouth and expelled by vomiting so that it bursts on reaching the ground but not before", followed often by a second ball, twenty minutes later. Should this be expelled, recovery may be expected, foreshadowed by clearing of the vision. If he recovers, he is indeed a wonderful man and is hailed on all sides. The women trill with their tongues and shout, and he is carried back in triumph; the defending pleader will swagger about and demand anything he wants for his client. 695

A fatal termination is characterized by little and non-forcible vomiting. Purging is common but said to be painless. Vision is affected and as time goes on, the spectators ask what he can see, "Do you see that over there?" indicating a hill. If he makes mistakes, then they say, "Ah, he is going to die!"

The poison may not take full effect for three or four hours. The end is ushered in by a last stage when the legs become weak; he staggers, then unable to stand any longer, falls to the ground dead, executed by the onlookers who rush in and hurl stones upon the body, crushing it. The relatives take the mangled corpse and lay it on logs covered with grass in the bush. No other covering is permitted. It may be placed in a tree by people acting as ants. Burial is forbidden. [764]

In some cases *mumi* used to be burned, not being given the chance of the poison trial. This took place at a recognized spot like ndono. The last man to be burned by Mainnya was Mtubula in 1892. Burning was also a punishment in some bad cases of murder. Such was the fate of Chingale. The man was put in a stave-stick, a pile of logs was built round him and then set on fire. [683]

Witch-finder. In addition to ordeal poison, another method of discovering a *mumi* is by "smelling out." If a number of people have died in a certain village, the inhabitants may begin to think that there is a *mumi* among them, and procure the services of a witch-finder. 754 695 791

ndembo, a woman who is pregnant for the first time;[1] *kawembere*, a woman who has one or two children; *ajembere*, a woman who has three or four children, and lastly, *ndabwa*, a woman who is past child-bearing age.

The information which I have been able to collect on abortifacients and contraceptives suggests that they are not used by married people merely to prevent their having more children, but that they are used by people who wish to avoid pregnancies which would be embarrassing, for example, by a woman whose husband is a labour migrant. To what extent the abortifacients and contraceptives are efficacious I cannot say; some, I know for certain, rely on a magical principle, for example, the medicated cord worn by a man during intercourse. On the other hand, the abortifacients taken orally may have some active ingredient.

A barren woman or an impotent man is regarded with some embarrassment and the marriage sureties (*ninumangwe*) of a childless couple will go to considerable trouble and expense consulting diviners and leeches in an attempt to make their wards productive. Childless couples are regarded as not fully adult and are treated in a patronizing way by those who have borne children. Since a man may marry other wives, barrenness in a woman is a cause of sorrow to her husband, but is not in itself a ground for divorce. Where the man is impotent, however, the woman may divorce him on this ground, though she usually takes a paramour and forces her husband to an action for damages which automatically leads to a divorce because it is the usual practice in these cases for the court to ask the woman if she wants to be divorced from her husband.

In contrast to the satisfaction shown at the birth of a child is the sense of sorrow evinced when a child is still-born or the woman miscarries. The Yao do not distinguish between still-births and abortions, both events being known by the word *kwanga*. This is a verb and refers to the process of abortion; there is no term for the dead foetus itself. I made no attempt to enumerate miscarriages and still-births because they are supposed to be due to breaches of sexual taboos on the part of the husband and wife, and interviewees were naturally reluctant to mention them. Miscarriages and still-births are greatly feared, and the woman is considered to be in a very dangerous condition until she and her husband have carried out a ritual purification. Should a man have intercourse with a woman who has miscarried and not yet been purified he will contract a disease called *kwaw* which is believed to be invariably fatal. Still-born children or aborted foetuses are buried in a hole dug with sharpened sticks in the bush by the women, whereas children who are born alive and die afterwards are buried in the graveyard in graves dug by men with hoes. The burial spots of still-born babies or aborted foetuses are marked with a stone or broken pottery, since it is believed that to step on them will induce an illness.

The contents of the innermost kin-groups is shown in the child-birth procedure. Birth normally takes place in a hut in the presence of the older female relatives of the woman and the female representatives of the man. The husband's representatives are necessary because the Yao, like many other Central African peoples, believe that an adulterine child will not be born to the woman unless she confesses (*kupwa*) the name of the genitor. If she persists in concealing the identity of the genitor, they

[1] *ndembo* = elephant, hence ivory. The names *ndembo* and *ndembo* have both refer to the ivory bracelets traditionally worn by the woman in the pregnancy initiation ceremony.

cipute yearly in the great initiation festival for boys and girls. Consequently as they repeat each year the lessons of their own initiation, the ceremonies are the main vehicle of Yao culture.[1]

There are also two Moslem ceremonies:

(1) *Jande*, the boys' Moslem baptism, which takes about seven days, and is usually worked in with *lupande*:

(2) *Nande*, the girls' Moslem baptism, which is the same as *jande*, but usually quite separate from *cipute*. It is important that the wife of a Moslem should have her *nande* so that she knows how to prepare the food properly at Ramadan.

Menstrual and Other Taboos

Menstruation is held to be dangerous. A special mat is used by the woman during this time, and is rolled up and kept during the rest of the cycle. The hut is completely replastered after menstruation. Intercourse during menses leads to disease of the man. Sexual contact is dangerous to persons at certain other periods: during initiation ceremonies, during mourning, and for babies who have not been through the protective rite. The danger is thought to lie in *ndaba*, a dread disease characterised by swelling. This may be transmitted by salt in the food. Deaths are often attributed to 'salt'. Much of the significance of the mourning is that medicines are prepared which protect the mourners against the dangers attendant on sexual activity.

Burial Rites

News of a death must be sent to the chief by a messenger carrying a single fowl. The chief gives a present of calico for wrapping the body, and a goat for the burial men. These are called *amilo*, neighbours unrelated to the dead, who volunteer for certain duties. They prepare the body for burial and carry it in procession to the graveyard outside the village. No uninitiated person is allowed to see the funeral. All who attend the burial are prohibited from sexual intercourse for one month. After this time the prohibition is lifted by a ceremony of beer drinking and feasting, and on the following day all fires in the village are extinguished, and then relit, and the mourners are shaved. A year later beer is brewed for a final ceremony.

For a period after her husband's death a widow is unclean, and has to be purified by ritual intercourse with a man who is paid. The widow is not allowed to remarry for two or three years. A widower leaves his wife's village, after receiving a parting gift. The widows of ordinary persons are not inherited. If a man has himself a 'name' (rank and social position), he has an heir, who inherits also the wives of his predecessor. But if the heir (the maternal nephew) has married a cross-cousin (mother's brother's daughter) he would not consider the wife's mother as his inherited wife.

Before the burial the dead man's hut used to be destroyed, together with his possessions. Immediately afterwards a consultation is held as to whether retaliatory action against sorcerers is called for. The *amilo*'s duties include not only the conducting of the burial, but also the subsequent inquiry and the conduct of the second ceremony, the beer drinking, at which they shave the mourners. A man who has

[1] Main sources for girls' initiation: Hechel, 1935, p. 19; Stannus, 1, 1910, pp. 184–7; 4, 1911, pp. 265–74; Stannus and Dewey, 1913; Duff, 1903, pp. 312–15; Abdullah, 1915, pp. 16–17; Macdonald, 1882, vol. i, pp. 125–30; Werner, 1906, pp. 126–7; Johnston, 1897, p. 410.

1: Tew E-4 (no date) 1950 FT7 Yao FT7

performed these services used to enter a special relationship of privileged familiarity with the village of the dead. This has died out in Nyasaland, but accounts of *Utani*[1] among the Yao at Masasi and Songea suggest that something of the kind is still practised.

Chiefs and headmen are not buried outside the village, as are other persons. They used to be buried before their own huts, but now in the centre of the village. Shrines were raised over their graves, at which offerings of beer and flour were made. If the village was moved the pot of beer sunk into the ground at the chief's grave was also removed and reinstated at the new site. A dead slave was buried by his fellow slaves; normal rights of sepulture were denied to suicides and to persons who had died in taking the poison ordeal (that is, convicted sorcerers).[2]

OTHER DISTINCTIVE CULTURAL FEATURES

The Yao have a tribal mark of two short cuts on each side of the face between the eye and the ear.[3] Their women did not wear the *pelele*, lip-ring, although their neighbours the Makua and Makonde did;[4] the fashion seems to have spread to south Nyasa in the 1880's, as many travellers commented on it, without distinguishing whether the wearers were Yao, Nyanja, or Lomwe.[5] The women used to pierce the left *ala nasi* and insert a metal or lead stud, *cipini*.[6]

MAKUA-LOMWE

TRIBAL AND SUB-TRIBAL GROUPINGS AND DEMOGRAPHY

Nomenclature

The *Ma-* in *Makua* is not a prefix, but part of the name. Variant spellings are *Makoa*, *Makua*, *Makuaa*. They are sometimes referred to by the name of one subdivision, the Modo Makua, and called *Amoto ni Moto*.[7]

The *Lomwe* (also spelt *Lomwi*) are called *Alolo* by the Yao, and are also frequently called *Angoni* (*Ngoni*) which is an old name for the people of the region.[8] Any of the Makua-Lomwe peoples who have migrated into south Nyasaland are collectively termed *Ngoni* in official reports; Ngoni is a hill in the region of Portuguese East Africa, whence they come, but they should not be confused with the Ngoni of Tanganyika.[9] Another name for them is *Arikoma*.[10] *Alolo* is incorrectly applied to all the Lomwe; it has a stricter application to the Cuabo from Quilimane.

[1] Swinnow, 1937; Mawson, 1941; Spire, 1945.
[2] Main sources for burial are: Johnston, J., 1902, pp. 28–30; Swinnow, c. 1900, pp. 140–4; Abdullah, 1919, pp. 19–21; Duff, 1905, pp. 320–1; Macdonald, 1882, vol. i, pp. 210–12.
[3] Murray, 1931, p. 133.
[4] Thompson, 1882, pp. 37–8, writing of the Yao of the Ruvuma valley.
[5] Macdonald, 1882, vol. i, pp. 16–17; 'around Blantyre hardly any woman is without it'.
[6] Swinnow, c. 1900, p. 326.
[7] *Handbook of Portuguese Nyasaland*, 1901, p. 30; Murray, 1902, p. 56; Weule, c. 1909, p. 239; Livingstone, 1874, p. 30.
[8] Thomson, 1890, pp. 272–77; Cooper Bonsero passed through Mangoro country. Burton, 1873 (Lacerda's journey, 1798), mentions Mangoro.
[9] Abraham, 1951, p. 13; Murray, 1929, p. 48.
[10] Johnston, W. P., c. 1894.

3:Stanner D-5 (ca. 1912) 1922 FT7 Yao FT7

 764

person, he may also give a goat. The office is to wrap up the body of the dead, the goat 203
is for the undertaker, *mulu*.[1]

Until eight or ten years ago, the Wayao buried their dead in a posture of complete 764
flexion. The preparation of the body after death is carried out by friends from a neighboring village who volunteer for the service. They are known as *mulu*, (*ding. mbilu*). [767]
Macdonald[2] thinks the word originally meant relatives; it has essentially the opposite meaning now. The corpse is washed in ordinary water and no anointment is made. The limbs, formerly, were then flexed on the body and at all the joints. The clenched hands were placed under the chin of the bent head or the hands were spread over the face of the flexed head, while the legs were tightly bent at the knees and brought up close against the abdomen. The corpse was securely bound in this position and adorned with a loin-cloth of bark. The body of a man found stiff and extended was a source of great trouble. Water was heated, and the body bathed until it was as relaxed as possible. As much force would then be applied as was necessary to gain the required degree of flexion, the bones often being broken in the process.

In the case of a woman, her female friends put on her bark-cloth loin covering, but the [767]
washing and trussing up of the body were usually done by men unless there were some women particularly skilled in the operation.

The flexed body was then set up on the dormant[3] sleeping mat within the hut, and from time to time, so long as it remained exposed, it was washed, people coming from other villages to offer their services for this task. Watchers sat continually by the body, the wife and perhaps a brother on either side, while others slept in the hut to take their turn later. The rest of the mourners sat on the veranda about the door.

As soon as the *mulu* had finished their work, wailing began, started by the wife and car- 765
ried on by all the women of the village and the women relatives from elsewhere. Wailing continued all day until about ten in the evening, and then started again between two and three in the morning. This went on for three or four days or was intermittent for a longer time, always recommencing with the arrival of a party from another village. I have never heard of flour being put on the heads by Yao mourners, as mentioned in *Africanus*.[1]

News of a death was always sent to all the relatives, and burial might be delayed to [764]
allow for the arrival of those from a distance. Under such circumstances, the body was enclosed in a casing of bark, the ends being closed by bamboo pegs. Exaggerated signs of grief were sometimes made by the mourners who beat their breasts with their hands while they knocked their heads against the ground or a wall, but the Yao did not indulge in the excesses of the Anyawiza near Lake Chilwa who practised a kind of flagellation, the relatives within the house meeting any new-comers at the door and beating them with sticks. This treatment was not resented. Women alone did the wailing; a man indulging in such expression would be laughed at. His part in the old days when the natives possessed firearms was

[1] Vide infra, p. 264. [2] Op. cit., vol. I, p. 395. [3] Ibid.

765 to fire off his gun as long as his powder lasted. During the period of mourning, drumming
[539] went on continuously, *chindinda* being played on the three small drums called *ikawa*.

With the exception of the flexed attitude of the body, the foregoing description is a correct account of what happens today. The body is now fully extended.

767 The *ewele* are two or four in number, although other friends may assist in all their services. On about the third day, the *ewele* sew up the body in bark cloth, completely enveloping
764 it; a bamboo needle is used and left sticking in the cloth at the last stitch. The body is then enclosed in a mat slung on a pole, and carried from the hut to the grave. First, the procession makes a round of the village, passing by all the houses which the dead man used to visit, and over all the paths he used to cross. His children and those of his relatives under seven or eight years old gather in the village, and throw pieces of charcoal toward the body as it passes, "so that they shall forget the dead man," or run after the corpse, while some use sprinkles medicine over them.

764 As the procession leaves the village, it is headed by the drums playing *chindinda*, but
[539] after a few hundred yards, only the *ching'ongo* drum, now called *chitenda*, beats time for a short distance; the procession then goes on quietly. Following the drums, walks the mother or another relative carrying four with which the grave will be marked out. Behind this mourner, the body is borne by the *ewele*. The *ewele* are always the first to carry the body, but are later relieved by other friends of the deceased; no one would ever ask to be relieved.
[114] After the chief mourner, follow the other relatives and friends, the men first, the women behind. Boys just back from their *wapogo* attend to learn the customs. All the relatives of the deceased go to the burial, contrary to Macdonald's account.[1]

In this order, the procession reaches some two thirty or forty yards from the place of burial where the corpse is put down in the shade, *ntulo*, "resting place", and while the women and part of the men watch beside it, the *ewele* proceed to the burial place. They cut branches from a *mawel* tree, and strew them on the path. On approaching the appointed spot, they clap their hands in salutation, asking that the burial ground be opened to them.

The head *ndola* chooses the site where the grave shall be dug, after which the mourner marks out the limits with the flour she has brought. In the days when the body was buried in contracted posture, a circular grave was dug just big enough to allow two men to work in it. Eight feet was the usual depth but this was decided by the deceased's spouse, if he were living, otherwise, by his near relatives. In the east side of this circular well, a cave was excavated, just large enough to admit the contracted corpse. When all was prepared, the body accompanied by all the mourners, was brought from *ntulo* to the graveside. The chief *ndola* with a friend of the man's family and one of his wife's, standing in the grave received the body and placed it in the cave, resting on a mat and covered with bark cloth. The body lay on its side with its back toward the well, and its face looking

[1] Op. cit., vol. I, p. 108.

765 night not break up for a week, but the practice was often modified to some degree, people returning to their homes during the day and coming back each night to sleep in the deceased's village. At the present time, there is a tendency to cut the proceedings short, and the mourners generally dispose on the second day after the funeral. This period of waiting is usually whiled away by playing and singing *chimlinda*.

768 On the day before the company leaves the village — now, often on the day after the
765 funeral — the ceremony of shaving the head takes place. The *ambi*, assisted in the case of a large party, by those who helped at the burial, shaves the heads of all the dead man's relatives. When this is completed, they begin to tear down the deceased's house. The grass from the *roof*, with the hair removed from the heads of the relatives, is carried to the cross-roads and burned. The walls of earth are torn down and made into a heap; on the top, a stick is raised, and at its base is placed the dead man's snuff box. Sometimes a cactus euphorbia, *upuchi*, is planted on the mound and remains round about. The snuff box is kept replenished with snuff. This, with the cassava, is reserved for the *ambi*; no one else may partake of them.

While the house is being pulled down, the chief ties around the neck of the widow a single string of beads or a small piece of calico, *ng'anji*. After the house has been demolished, the *ambi* return to their homes and on the following morning, everyone else departs.

767 The position of *ambi* is a strange one. Every man in the course of his life probably acts as undertaker for some friend; many have probably participated the service several times. He receives no regular payment, but beads, and, nowadays, coins are often thrown into the pot of water with which he wets the heads of those he shaves after the funeral, and he has the freedom of the village in which he has so acted forever afterward, the degree of freedom being determined by the distance which he has travelled to officiate. When Wandalama died, a headman named Chimi from Makanjila's on Lake Nyasa, over a hundred miles away, acted as one of the *ambi*. The occasions on which he revisited Malenya's village are
[431] well remembered, as they were marked by much frolicking and some obscenity. He was the recipient of enormous presents of fowls, sheep, and anything else he cared to take, and having commandeered men from the village to carry these gifts for him, he would leave, accompanied by all the people, yelling and shouting their joy at seeing him again.

Any fowls or other provisions that friends may present to the deceased's relatives at the time of the funeral to help defray expenses are given to the *ambi*; no one else may eat them. Some may be kept against the next death in the family.

769 A few days after the funeral, recourse is had to the chief to settle whether any action
622 must be taken in regard to the cause of the death. Some near relative of the dead man will be chosen for this purpose; he must not be shaved by the *ambi* at the time of the funeral. The consultation takes place at some secluded spot outside the village. The chief always brings some one with him to witness what is said. On arriving at the appointed place, the chief salutes the unshaven mourner who is probably accompanied by other relatives, and

1: Tew E-4 (no date) 1950 FT7 Yao FT7

cipate yearly in the great initiation festival for boys and girls. Consequently as they repeat each year the lessons of their own initiation, the ceremonies are the main vehicle of Yao culture.[1]

There are also two Moslem ceremonies:

(1) *Jandu*, the boys' Moslem baptism, which takes about seven days, and is usually worked in with *hupanda*:

(2) *Nsondo*, the girls' Moslem baptism, which is the same as *jandu*,

but usually quite separate from *ciputu*. It is important that the wife of a Moslem should have her *nsondo* so that she knows how to prepare the food properly at Ramadan.

Menstrual and Other Taboos

Menstruation is held to be dangerous. A special mat is used by the woman during this time, and is rolled up and kept during the rest of the cycle. The hut is completely replastered after menstruation. Intercourse during menses leads to disease of the man. Sexual contact is dangerous to persons at certain other periods: during initiation ceremonies, during mourning, and for babies who have not been through the protective rite. The danger is thought to lie in *ndaka*, a dread disease characterized by swelling. This may be transmitted by salt in the food. Deaths are often attributed to 'salt'. Much of the significance of the mourning is that medicines are prepared which protect the mourners against the dangers attendant on sexual activity.

Burial Rites

News of a death must be sent to the chief by a messenger carrying a single fowl. The chief gives a present of calico for wrapping the body, and a goat for the burial men. These are called *awilo*, neighbours unrelated to the dead, who volunteer for certain duties. They prepare the body for burial and carry it in procession to the graveyard outside the village. No uninitiated person is allowed to see the funeral. All who attend the burial are prohibited from sexual intercourse for one month. After this time the prohibition is lifted by a ceremony of beer drinking and feasting, and on the following day all fires in the village are extinguished, and then relit, and the mourners are shaved. A year later beer is brewed for a final ceremony.

For a period after her husband's death a widow is unclean, and has to be purified by ritual intercourse with a man who is paid. The widow is not allowed to remarry for two or three years. A widower leaves his wife's village, after receiving a parting gift. The widows of ordinary persons are not inherited. If a man has himself a 'name' (rank and social position), he has an heir, who inherits also the wives of his predecessor. But if the heir (the maternal nephew) has married a cross-cousin (mother's brother's daughter) he would not consider the wife's mother as his inherited wife.

Before the burial the dead man's hut used to be destroyed, together with his possessions. Immediately afterwards a consultation is held as to whether retaliatory action against sorcerers is called for. The *awilo*'s duties include not only the conducting of the burial, but also the subsequent inquiry and the conduct of the second ceremony, the beer drinking, at which they shave the mourners. A man who has

[1] Main sources for girls' initiation: Heckel, 1935, p. 19; Stannus, 1, 1910, pp. 184–7; 4, 1922, pp. 269–74; Stannus and Dovey, 1913; Duff, 1903, pp. 312–15; Abdullah, 1919, pp. 16–17; Macdonald, 1882, vol. i, pp. 125–30; Werner, 1906, pp. 126–7; Johnston, 1897, p. 410.

2: Mitchell E-5 (1946-1949) 1956 FT7 Yao FT7

621 When a villager died in pre-White days, the hut and personal effects were destroyed. Nowadays, with the improving type of [768] dwelling, which frequently includes well-timbered doors and glass-windows, huts are treated with medicine to cleanse them of the harmful effects of the death and they are used again. But [356] all houses must be repaired continually if they are to remain habitable. Eventually most houses fall beyond repair and new houses must be built. The women pull the poles out of the ground and use them for firewood and the site is planted with pumpkins or maize by the nearest relative.[1] A new hut site is then chosen according to the wishes of the owners. As a rule outsiders are neutral about this, and a village member selects a site in accordance with his or her social position in the village. The women still stay near their mother, but they may build on the outside fringe of a group of huts. When the mother's house collapses she may in turn build her hut on the outside fringe of the group near her daughter's hut. In this way the spatial distribution of the huts gradually comes to reflect the segmentation of the lineage.

621 As the woman's daughter's children grow up and marry, the woman's son persuades his wife's relatives to allow him to take 591 his wife to live in his home village. If he is a polygynist he usually takes the senior wife, but he may take the other or others as well. His own daughters now marry uxorilocally in the village if their mother is still alive. If the parents live long enough their daughter's daughters in turn marry and build their huts there. A crisis comes when either the man or his wife dies. The children have to decide whether to stay where they are or to move back to their own matrilineal village. If they do stay at their father's village they form the nucleus of a patrilaterally-linked group. As they grow older the senior male of their matrilineage may come to live with them. Through the years while this internal differentiation is developing within the village, the huts are decaying and being rebuilt. While new hut sites are being selected the physical form of the village is reflecting the continuing social differentiation.

621 At the same time gardens are being planted and crops reaped 361 each year. The soil in the first garden sites has probably been 166 depleted already and is either lying fallow or is under cassava.

[1] Usually the name-heir of a woman, i.e. her daughter's daughter.

3:Stanzus D-5 (ca. 1912) 1922 FT7 Yao FT7

765 might not break up for a week, but the practice was often modified to some degree, people returning to their homes during the day and coming back each night to sleep in the deceased's village. At the present time, there is a tendency to cut the proceedings short, and the mourners generally disperse on the second day after the funeral. This period of waiting is usually whiled away by playing and singing *ndindimba*.

● 768 765 On the day before the company leaves the village — now, often on the day after the funeral — the ceremony of shaving the head takes place. The *ewile*, assisted in the case of a large party, by those who helped at the burial, shave the heads of all the dead man's relatives. When this is completed, they begin to tear down the deceased's house. The grass from the roof, with the hair removed from the heads of the relatives, is carried to the cross-roads and burned. The walls of earth are torn down and made into a heap; on the top, a stick is raised, and at its base is placed the dead man's snuff box. Sometimes a cactus euphorbia, *ngochi*, is planted on the mound and cassava round about. The snuff box is kept replenished with snuff. This, with the cassava, is reserved for the *ewile;* no one else may partake of them.

While the house is being pulled down, the chief *mbile* ties around the neck of the widow a single string of beads or a small piece of calico, *ng'onji*. After the house has been demolished, the *ewile* return to their homes and on the following morning, everyone else departs.

767 The position of *mbile* is a strange one. Every man in the course of his life probably acts as undertaker for some friend; many have probably performed the service several times. He receives no regular payment, but beads, and, nowadays, coins are often thrown into the pot of water with which he wets the heads of those he shaves after the funeral, and he has the freedom of the village in which he has so acted forever afterward, the degree of freedom being determined by the distance which he has travelled to officiate. When Wandalama died, a headman named Chisui from Makanjila's on Lake Nyasa, over a hundred miles away, acted as one of the *ewile*. The occasions on which he revisited Malemya's village are well remembered, as they were marked by much frolicking and some obscenity. He was the recipient of enormous presents of fowls, sheep, and anything else he cared to take, and having commandeered men from the village to carry these gifts for him, he would leave, accompanied by all the people, yelling and shouting their joy at seeing him again. [431]

Any fowls or other provisions that friends may present to the deceased's relatives at the time of the funeral to help defray expenses are given to the *ewile;* no one else may eat them. Some may be kept against the next death in the family.

A few days after the funeral, recourse is had to the chief to settle whether any action 768 must be taken in regard to the cause of the death. Some near relative of the dead man will 622 be chosen for this purpose; he must not be shaved by the *ewile* at the time of the funeral. The consultation takes place at some secluded spot outside the village. The chief always brings some one with him to witness what is said. On arriving at the appointed place, the chief salutes the unshaven mourner who is probably accompanied by other relatives, and

3: Stannus D-5 (ca. 1912) 1922 FT7 Yao FT7

them listens to an account of the circumstances attending the illness and death. The point at issue is whether there is any evidence pointing to death from unnatural causes which requires consulting a diviner. The chief practically always agrees with the relatives, and it is said that he will never press them to go to the *wachisanga* unnecessarily. The case may end with this conference, or here may begin the long series of events described under *usuwi*.[1] 768 6a2

During the month subsequent to the funeral, certain taboos have to be observed. The widow may not bathe, and with the exception of the *awilo*, all who attended must refrain from sexual intercourse. At the expiration of this period, beer is brewed in the village, and all the friends and relatives are again summoned. This beer-drinking is called "the beer of rottenness," or "the beer of resignation." In addition to the beer, food is provided, and everyone helps himself without ceremony. *Chindimba* is sung and danced and at the present day, bands of trained dancers attend, including *ching'ponpong' wenye*.[2] A pot of beer is sunk into the ground, marking the site of the dead man's house. The night of *mutapata*[3] sees husbands and wives reunited, and the widow may go through ceremonial intercourse with a man appointed for the purpose called *litunu* or *mbilo*. Sometimes the widow refuses *litunu*, and is given medicine instead to cleanse her; her body is then no longer "hot" and likely to bring disease to those about her. A widow does not marry again for two or three years. A young man who loses his wife has no longer any standing in her village after *mutapata*. He is usually given a present, with the suggestion that he go elsewhere. After the death of an infant, the mother is considered unclean. She sleeps on a mat apart from her husband till after the ceremony of shaving, and then undergoes a ceremonial coitus with her husband — in which case he is called *litunu* — after which, ordinary cohabitation is resumed. If she has been a widow, or if the child was born "with disease,"[4] another man acts as *litunu*. 765 768 [833] 587 768

The morning following *mutapata*, all the fires in the village are extinguished. A fresh blaze is then kindled with the fire-drill, *lumangu*, either in the chief's house or in some spot nearby, and from there, fire is carried to all the houses. The ashes of the old fires, the stones supporting the cooking pots, and the porridge sticks are taken to the cross-roads, and there destroyed. Everyone then shaves all his own hair, head, axillae, and pubis. The custom of the second shaving by the *awilo*, described in *Africana*,[5] is, I think, an adaptation from the Anyanja. A year later, beer is again brewed, and all the relatives summoned to the village to partake of it. There is dancing, but no ceremony. 769 [372] [302]

The Yao bury their dead in regular graveyards in wooded country, the thicker the forest the better, often two or three miles away from a group of villages. Different villages bury their dead in different parts of the burial ground; relatives are usually buried near one another. Graves are never revisited, and no one would enter a graveyard except at the time of a funeral, and then only after obtaining permission from the chief. Such spots are 764 769

[1] Vide infra, p. 286.
[2] Vide infra, p. 370 and Pl. I.
[3] Beer-drinking.
[4] Vide infra, p. 288.
[5] Macdonald, op. cit., p. 111.

1: Tew E-4 (no date) 1950 FT7 Yao FT7

Land Tenure

The rules governing land tenure were those which would be expected of a society which suffered from no land shortage. A man was entitled to as much land as he could cultivate, the limitation being that he should consult the headman as to his neighbours' boundaries. Abandoned gardens could only be taken up with the permission of the original cultivator.[1] 423

MAIN CULTURAL FEATURES

Religion

The Yao are largely Islamized. Codrington remarked that the perpetuation of this faith was distinctly antagonistic to British influence, and it received considerable attention from chiefs and headmen. Schools for the instruction of youth in reading and writing Swahili in Arabic characters were established in nearly every village, where also prayers were made at regular intervals in the day. The Moslem fasts and feasts were also observed, and the Yao were not inclined to embrace Christianity.[2] Their conversion to Islam did not take place till the nineteenth century, long after their first introduction to the Arab traders at Kilwa and Zanzibar, although they had adopted Swahili modes of dress much earlier.[3] 771 787

According to Hetherwick, Islam is strongest on the lake shore and on the east border of Nyasaland, chiefly round the old slave-trade centres. Makanjira's on the south-east side of the lake, and Domira Bay on the west, were the centres of Moslem propaganda. The Moslem population around Zomba and Blantyre consists mainly of Yao men, who have built themselves mosques in their own villages, or use the large mosques of Indian Moslem merchants. In the west districts, lower Shire, Ruo, central Shire, Lilongwe, Fort Manning, the Moslem population does not total more than 732. In the districts round Fort Johnston and Kotakota, the Moslems are one-ninth of the total population, while in Zomba district they number one-fifth.[4]

The Yao pagan religion was a form of ancestor worship. Apart from diviners and medicine men, there was no regular priestly profession. Intercession with the ancestors was performed by the chief, on behalf of the chiefdom, by the headman on behalf of the village, and by the head of the matrilineal kin for his dependents.[5] A man was qualified to approach his ancestors individually only if he had been initiated and had a house of his own.[6] 771 769

Some of the ritual duties of the chief have already been mentioned. When his people were visited by drought or epidemic, or when he fixed the day for the beginning of the millet harvest, he made an offering of flour and of beer poured into a pot in the ground at the grave of a dead chief. The village headman made similar offerings to the spirit of his dead predecessor. The spirits of the dead Nyanja chiefs, ousted by the Yao invasion, were regarded as still powerful in the homeland of their people. For instance, Kangomba, whose shrine was on Mount Soche, used to be appealed to for rain, and on the principle that the most appropriate mediator between a dead man and the living is a descendant of the former, the Yao chief, Kapeni, when he wished to propitiate 771 631 622 775 782

[1] Macdonald, 1882, vol. i, pp. 177–9; Stannus, 2, 1923, p. 28e.
[2] Codrington, 1898, p. 516; see also Maples, 3, 1893.
[3] Young, T. C., 4, 1932, p. 37.
[4] Hetherwick, 4, 1927, p. 127.
[5] Werner, 1906, p. 270; Stannus, 4, 1922, p. 311.
[6] Macdonald, 1882, vol. i, p. 63.

1: Tew . E-4 (no date) 1950 FT7 Yao FT7

775 Kangomba, used to persuade Nyanja to help in the sacrificial rite. When Kapeni in
782 turn fled to Mount Soche from the Ngoni, and died there, the Yao addressed their offerings to him, not to Kangomba.[1] The word *Mulungu* has sometimes been interpreted to mean Supreme Being, God, Creator, but among the Yao it seems not to have
[776] a personal connotation. It was used to describe the agent in any mysterious event,[2] or the place where the ancestor spirits (*masoka*) were supposed to dwell. Daily life was
[769] full of acts of respect towards the ancestors, who were regarded as jealous of the living, and requiring constant propitiation.[3]

Sorcery

754 Accusations of witchcraft and measures for dealing with it play a dominant role in Yao social life. With certain exceptions nearly all diseases and deaths are thought to be caused by sorcery. The exceptional causes are: the hand of God, old age, the transgression of certain taboos, and battle wounds. If sorcery is suspected the relatives of the sick or dead man consult the diviner to identify the offender.

Yao (in common with the Maravi and many peoples of Central Africa) believe that sorcerers have a craving for human flesh, which they satisfy by killing with magic the
[835] victims of their malice and hatred. They acquire their magical powers by an apprenticeship, which might include incestuous relations with mother, sister, or mother-in-law, or sleeping on the grave of the mother for one night. The sorcerer then learns the medicines and finally demonstrates his power by killing a young relative by magic;
[266] he waits till the victim is buried, and then magically exhumes him for the secret feast with his fellow sorcerers. Each sorcerer who shares the flesh owes a debt to the one who secured the victim.

[755] Charms are used as preventive measures against sorcery. When a diviner has
754 diagnosed the cause of death as sorcery, retaliatory measures are taken. The headmen
683 of the village could either call in the witchfinder to identify the offender or he could call in the diviner to take action against all the sorcerers in the village. After the
[695] diviner, *Mabisalila*, had revealed the guilty ones, they were challenged to take the poison ordeal to prove their innocence. If they died, the proof and the punishment were simultaneously accomplished. If they survived, the diviner was held to have been at fault and they were acquitted. The witch doctor was supposed to entice sorcerers to the graveside, and slay them with magic more powerful than their own.

[695] The diviner's findings are to-day checked by the poison ordeal administered to a chicken. A sorcerer detected in this way might be asked to provide medicine for the man whose sickness he had caused, or after a death he might be compelled to pay compensation. If the accused is a village headman, he will not be summoned before a chief, but his brother will take the villagers away from the sphere of his influence, or he may be chased away from the district. Accusations of sorcery follow certain regular lines. Nearly all accusations fall on relatives. Diviners are consulted by matrilineal relatives of the sick or dead person, and the man most usually accused is the brother of the accuser, or the husband of his sister. Witchcraft is therefore a manner of expressing the hostilities latent in these relations, which are, in the Yao social system, full of tension.

[1] Macdonald, 1882, vol. i, p. 70.
[2] Hetherwick, 3, 1902.
[3] Heckel, 1935, pp. 14–15; Macdonald, 1882, vol. i, pp. 58–75, 204–13.

631 advocates the more orthodox type of Islamic devotion in which
643 a quiet restrained manner is emphasized. As far as I know the
745 *twaliki* sect are confined entirely to Jalasi's chiefdom and the *sukutu* to Kawinga and Liwonde. In this matter, Nyambi's people side with Kawinga's and Liwonde's.

On the other hand, local informal organization is well de-
631 veloped so that Chiwalo who is at the point of juxtaposition of
643 Kawinga, Liwonde, Nyambi and Jalasi chiefdoms, may try cases
692 involving headmen from any of these areas, and they usually accept his arbitration. His is the nearest court house. The actual boundaries of the four areas, however, are very clearly recognized and Chiwalo realizes the limits of his jurisdiction. Though he may arbitrate in a difference between headmen, he would not dare to apportion land outside his area. Headmen living on the boundaries of two chiefdoms arbitrate in each other's cases; the villagers under them intermarry. A village in Chiwalo's may
621 procure garden lands in Jalasi's area, and children may be initiated
631 at ceremonies held by headmen in other chiefdoms. There is no
643 clear break in the normal social relationships of people across the boundaries of chiefdoms, and their members interact as freely with each other as members of two villages of the same chiefdom. The cleavage between the villages on different sides of the boundary of a chiefdom becomes apparent only in special situations.

631 The formal relationships of the chiefs, set by the history of their conquests and their kinship, and incorporated in and slightly
643 modified by the Administrative framework, are overlaid by an informal local organization where the interaction of village headmen only conforms to the formal pattern when no agreement can be reached.

The Position of the Modern Chief

643 In ritual situations a chiefdom is clearly differentiated from its neighbours, and many of these situations arise in the cult of
769 tendence on the ancestor spirits. The ancestor cult has fallen
782 away almost completely among village headmen, but among the chiefs it is still strong, and appears particularly in the rain-prayers and the initiation ceremonies. Later, I shall discuss at length the importance of the chief's sanction before headmen may conduct initiation ceremonies. This is because the spirits

2: Mitchell E-5 (1946-1949) 1956 FT7 Yao FT7

of the ancestors of the chief are supposed to affect the welfare of the initiands. Though some village headmen may conduct initiation ceremonies they are unable to offer rain-prayers. These are offered by a chief on two occasions. The first is in November, before the rains have started. The chief's wife and some women from the bigger villages in the near vicinity of the chief's village gather at his hut. They brew beer—*ukana wacisoka*, the beer of the spirits—to be used as a libation. At sunset on the appointed day the chief goes to the shrine tree where some headmen have gathered, and pours some of the beer into a pot, partly buried at the root of the tree, while he invokes all the spirits of his departed ancestors—mainly matrilineal but occasionally some patrilateral. He then entreats the spirits to send some rain and to look after their 'children' in the land. Sometimes a length of calico is hung on the tree as an extra offering. Should no rain fall the chief will have to repeat the offering until it does fall. When the rains have ended in March he makes a second offering 'of thanks'.

In the context of the present discussion, the important point is that it is only the chief who can make this libation and offer this prayer. If his plea fails the whole area starves, and no headman may supplicate his ancestors on his own behalf or approach the chief's ancestors through his own ancestors. The grain for the beer comes from the various villages, but not on a fixed rate of levy. Some villages never contribute. The chief buys the offered cloth on behalf of his people. When in 1948 the cloth on the shrine tree was stolen, Chiwalo imposed a levy on the village headmen in the area so that a new cloth could be bought. Here the boundaries of the chiefdoms are important, and no headman outside Chiwalo's area was approached. A village headman from Jalasi's area, though geographically much closer to Chiwalo, relies on Jalasi's rain-offerings and may not approach Chiwalo or plead with him to offer a rain-prayer to his ancestors.

Another ritual situation in which the limits of the chiefdom appear is during the institutionalized pillage on the death of a chief. I have not been in any area when the chief has died, so that I rely here on the tales of informants. During the mourning rites certain feasts are held. The food for the mourning feast of a commoner or village headman is provided from his estate

622 554 648 annuity. This recognition publicly announced their superior status, because not all headmen could be Administrative headmen. We do not know exactly how the Administrative headmen were appointed when the Ordinance was introduced. The observable results, however, are that no headman, as far as I am aware, who was of superior status in the indigenous ranking system, is not an Administrative headman to-day. Being an Administrative headman is then in itself an indicator of rank.

622 554 643 415 969 881 Rather more important than this is the right to hold initiation ceremonies. MacDonald says that these rights were held by the chief only, but it is not clear whether the word 'chief' used here refers to the village headmen or the 'chief of the land'. Nowadays, the rights are held by village headmen as well as the chief. The right to hold initiation ceremonies is signified by the possession of a small flat basket (*ciselo*) in which the oblational flour for the ceremonies is carried. When a chief grants a *ciselo* or oblational basket to a village headman, what in fact he does is to grant him permission to approach the spirits of his ancestors. The headman uses the basket on three occasions during the initiation ceremonies. First, before the ceremony is announced he pours a little cone of sorghum meal at the root of a special tree in or near the village. This tree is known as the *nsolo*, or the shrine-tree where all offerings to the ancestors are made. While he works the flour through his fingers to allow it to fall in a cone, he calls on his ancestral spirits and asks them to intercede on his behalf with the spirits of the chief's ancestors. He then formally requests permission to hold the initiation ceremony. This cone is left intact through the night. Should it collapse the interpretation is that the spirits are not willing that the ceremony should take place and it is postponed for some days. Offerings are made until eventually the cone, by remaining intact through the night, indicates that all propitious for the ceremony to be conducted. The second occasion when the oblational basket is used is when the village headman or chief goes down to the grass sheds where the rites of segregation and aggregation take place. Here he pours flour over a twig and begs the safe conduct of the initiands through this physically and mystically dangerous period. Third, each individual initiand, and his or her mother, is touched on the forehead and forearm with the flour on the evening that the initiands leave for the grass sheds. During

2: Mitchell E-5 (1946-1949) 1956 FT7 Yao FT7

who are sexually inactive from contracting *ndaka*.[1] At the same time the headman gives each household a piece of the fire which has been newly kindled in the traditional way by rubbing two sticks together.

The mystical danger inherent in the act of setting up a new village is well brought out in the propitiatory prayer and the abstinence from sexual intercourse. Once again it is the village headman who must make the offering to his ancestors; and it is the village headman who has intercourse with his wife so that the effluvium from his sexual activity may permeate the medicine in the hut and so protect the villagers from *ndaka*. Lastly, it is very important that the whole village cooks and is warmed by one fire. 'We are of one fire' expresses the common origin of two villages; though in fact every time a new village is founded a new fire should be kindled. To bring fire from the village of origin is to bring sorcery, since the Yao believe that sorcery can operate between persons closely linked by kinship only. To have one's own fire is to be autonomous from other groups.

The Burdens and Rewards of Headmanship

MacDonald had the perspicuity to see not only that the village headman was the representative of a corporate group and that he represented this group to outsiders, but also that he represented external authority to his villagers. The village headman who in his person stood for the unity of the group, performed certain ritual acts which emphasized this, such as praying to the village ancestors. In spite of the decline of the ritual his position is still regarded as exceptional. Much, however, depends on the rank of the village headman. There may not be much difference in ritual observances and mystical dangers between a headman who has in his charge a meagre three or four huts, and a commoner. In the larger and more important

[1] This is one of the most important mystical concepts of the Yao. I have described this condition and its implications more fully in *Marriage among the Machinga Yao of Southern Nyasaland* (R.-L.I. Paper), forthcoming. Briefly it is a disease characterized by œdema which affects those who are sexually inactive when they are suddenly brought into contact with a person, or an object which he has touched, after having intercourse. The people most affected are the young and the old, i.e. those who cannot have sexual intercourse. Those who are capable of intercourse are expected to have ritual intercourse with a stranger, and so fortify themselves against this dread disease.

2: Mitchell E-5 (1946-1949) 1956 FT7 Yao FT7

Among the relatives of the largest order of kinship (*cipapo*) there is a bond only slightly more intimate than that among people who have the same clan-name. There are none of the jural and moral obligations which characterize membership of a matrilineage which is a part of a village. The larger group, for which there is no exact Yao term, may be looked upon as a maximal lineage. It is characterized by a relationship of a more definite bond than that of having a common clan-name, but the members may still marry.

The Matrilineage

It is within the village that the matrilineage operates most clearly. The distant matrilineal link which connects villages such as Cikoja, Mbande and Cibwana Kawinga, is set in a context of inter-village relationships and is therefore part of the political system. Within the village the matrilineage becomes a corporately acting group of a different dimension. It is in this order of lineage within the village that we have the set of relationships described by Professor Fortes as applying to the inner lineage[1] among the Gold Coast Tallensi.

The depth of a matrilineage within a village is seldom more than five or six generations from the founding ancestress to the new-born children. The name of the founding ancestress is remembered and the descent of each member of the matrilineage can easily be recounted. The ancestress is known as the *likolo* or *lipata*, words which also refer to the trunk of a tree. We have seen how at a headman's installation ceremony the image of a tree was invoked in describing the lineage.[2] We find it once again here, where the founding ancestress is seen as the stem or root from which all members of the lineage have sprung, and the various sections of the matrilineage are seen as the branches (*nyambi*). This symbol of the lineage appears also during offerings to the ancestors. The chief, or headman, in

[1] See Fortes, M., *Dynamics of Clanship among the Tallensi*, Oxford University Press (London, 1945), and *The Web of Kinship among the Tallensi*, Oxford University Press (London, 1948). The Yao system of lineages is not the clearly segmented type of structure characteristic of the Tallensi. I hesitate, therefore, to use Fortes's terms, and use *matrilineage* for the localized unit which is usually a component of a village.

[2] See Chap. V, p. 119.

2: Mitchell E-5 (1946-1949) 1956 FT7 Yao FT7

621 making the oblation, pours the beer or sprinkles the flour at the
613 root (*lipata*) of a shrine-tree. As would be consistent with this
769 way of looking at the lineage, genealogically-distant ancestors are said to be 'below' (*pasi*), so that if a Yao wishes to say that a certain person was a matrilineal ancestor many generations back, he would say that he was 'very much below'.

The Concept of 'The Mother'

613 The matrilineal descendants of the founder look upon them-
562 selves as having been fed from the same breast and may express this by saying 'we are of one breast'.[1] Deep sentiment is
843 attached to the idea of the mother among the Yao. There is, for example, a sharp distinction drawn between those women who have had children and those who have not. When a woman becomes pregnant for the first time, she is given instruction in child welfare when she undergoes a special ceremony (*litiwo*). This is a ceremony which is publicly announced and attended by most of her matrilineal and other kinswomen and acquaintances. No woman may attend this ceremony if she has not herself had a baby. Thus her change in status in the community is clearly shown by the public recognition of her condition, and the fact that she is initiated into secrets which are shared by other mothers only. Her position in the lineage is much enhanced when she becomes a mother. It is the most important step towards becoming a village founder herself.

562 The concept of 'the mother', in general, also appears in the
601 boys' initiation ceremonies. Certain phases of ceremonies may be conducted only with the help of the women. They have to
881 clap the rhythm to which the 'tailmen'[2] do their dances. Here all women are classified as 'mothers' and without their co-operation the ceremonies could not be conducted. During the same ceremonies three women appear with baskets of food on their heads. The tailmen remove the baskets and sacralize the

[1] *Tuli pelele pamo.* The word *nlango*, a doorway, is also commonly used. The idea in essence is exactly the same. It is the concept of the children who come to settle around a woman's hut door. It is used as *lisondo pamlango pao*, the people of his lineage section.

[2] The *m'mchim*. These are the functionaries in the initiation ceremonies. They carry medicated zebra tails during these ceremonies, and this gives them their names. See especially Seamon, 'The Wayao of Nyasaland', 229 ff.

2: Mitchell E-5 (1946-1949) 1956 FT7 Yao FT7

contents. Here once again the women, though they may have no boys in the initiation ceremony, are called 'the mothers'. The ritual co-operation of the mothers in the initiation ceremonies is paralleled by that of mothers and sons in political affairs: here sons are in charge of the villages, while their mothers and sisters form the nucleus of the localized kinship group, which in turn is the core of the village.

The ritual importance of the mother is nowhere more clearly seen than in the curse. The Yao believe that a mother may curse her child if he or she is disobedient or otherwise beyond control. Not many mothers do curse their children; the threat to curse seems to be more often used. Informants have told me of some mothers who have cursed their children, and the procedure and the wording of the curse have always been very similar. It is usually not applied to young children who could be punished by other means, but to adults and particularly adolescents. Usually the mother lifts her breast and points the nipple upwards saying, 'If you have never sucked from this breast nothing dreadful will happen to you.' The consequences of this are greatly feared. Where I have been told of curses, each time the child has either died suddenly shortly after the curse, or at least it has gone mad. The curse is vaguely supposed to operate through the ancestor spirits, but I could get no clear statement on how this happens.[1] Whatever the cause, however, the symbolic action of lifting the breast and the dire effects which are supposed to follow from this, indicate the importance of the mother in the lineage.

The Yao attach this sentiment, in general, not only to the mother, but also to all senior matrilineal female relatives. In general speech all female members of the matrilineage in ascending generations are 'mothers', and all members in the descending generations are 'children'. This fundamental relation of mother and child extends throughout the lineage. The Yao term *ninamgolo*, used for the senior female members of the matrilineage, embodies this idea of 'the mothers'. More specifically, as far as men are concerned, the matrilineage is classified into

[1] Further evidence that the ancestor spirits are involved in the curse may be that madness is called *nambo*—spirits—and that it may be said of a madman that the spirits are beating him (*pikumpere nambo*). A curse may be revoked by blowing water out of the mouth, an act which is also vaguely connected with the ancestor spirits.

613 members goes to an outsider and grumbles to him about the
754 family squabbles[1] and quarrels. The outsider then takes the
578 opportunity of using this squabble to introduce his sorcery into
626 the lineage. The Yao greatly fear backbiting because of their dread of sorcery and none dreads it more than a village headman, a warden of a sorority-group,[2] or a person in the position of having to keep a matrilineage or section together. These people are continually adjuring the women under them—for it is the women who are believed to be the main culprits—not to fight among themselves; and if they do, not to take their complaints to an outsider but to the senior member of the matrilineage. The significance of this in relation to lineage unity is plain enough.

613 Apart from sorcery, strained relationships between members of
578 a matrilineage are believed to be dangerous for other reasons.
843 Malice may adversely affect people who are in mystically danger-
224 ous states. The most common of these states is pregnancy. If a woman has a quarrel with a matrilineage member while she is pregnant she is likely to have a difficult labour. The Yao say 'the womb has heard these bad words'. Another situation where malice or quarrelling will cause difficulties is in hunting. The luck of the chase is capricious and malice may easily bring bad fortune to an otherwise good hunter. For example, a successful hunter once gave each of his two sisters a piece of venison. Each complained that the other had been given the larger piece and quarrelled vehemently about it for weeks. The hunter now found that no game fell into his traps. He went to a diviner who indicated the quarrel of the sisters as the cause of his failure and told the hunter to get them to 'blow water' (*kuperye*). He did this; good relationships were restored and his traps were filled once more.

613 These deleterious effects, like the curse, are connected in some
578 way with the ancestor spirits. This is sometimes expressed quite
761 clearly when a person is called upon to 'blow water'. A
755 mother who wishes to revoke a curse, a woman who wishes to recant her malice towards her matrilineal relative who is suffering in childbirth, or a man whose sister's son is ill supposedly because

[1] This is called *mimi*, which I have translated as 'backbiting'. This idea is extremely important, as we shall see later.

[2] i.e. those men who are responsible for their sisters and their descendants. See p. 143 ff.

2: Mitchell E-5 (1946-1949) 1956 FT7 Yao FT7

of his malice towards him, might equally be called upon to do this. The person makes a statement to the effect that he bears no malice and hopes that the sufferer will be well. For example, a woman in Cikoja village who was called upon to 'blow water' during the labour pains of her mother's younger sister's daughter's daughter,[1] because they had quarrelled over a sifting basket, put some water in her mouth, spat it out and said: 'Those words I spoke: the basket is mine. This is my child. Both are mine. When I spoke and asked my child about it, they were not words to place in my heart, so that to-day we should have to go to the diviner because my child is hitched[2] and be accused because of the sifting basket. These words I push aside. I do not know whether there are other words that we fought about, but if they are these, my daughter's child come out!'[3] Sometimes the ancestors are specifically invoked, '*Conde, conde ŵamasoka* . . .' 'Please, please, O spirits . . .' This is a public confession of the tension within the lineage and it allows the lineage leaders to attempt to straighten out the difficulties, as they did in this case.[4]

These beliefs in mystical dangers of one sort or another which beset the matrilineage as the result of bad feelings within it, have the effect of constraining matrilineage members to maintain peaceable relations among themselves and are, therefore, conducive to maximum solidarity.

It is clear from MacDonald's writings that in earlier times the periodic offerings to the spirits of the ancestors was a valuable way in which the solidarity of the matrilineage was expressed. With the introduction of Islam and Christianity these sacrifices have disappeared. I have not worked in Christian areas long enough to be able to say whether the ancestor cult still persists. In the northern area, however, I can say that the ancestor cult survives as part of the practice of Islam. Periodically, feasts are held in

[1] See the history of the division in Cikoja lineage, pp. 165-6.

[2] *Kukolekwa*, i.e. the child cannot be born.

[3] *Une malolegala cicle cila cangwe. Aje mwamanga. Yenge pangwe. Pinawerenga nilunaya, hambaya mwamanga, nginiwe malolo gakwika hantima, gati ngaka kilo nilwenda hantanga cakolekwa mwamanga nilumkumula ma ligenga lya cicle. Cekge ngatatako. Kwalisi nagapili gati gwawe hangatile nambo nagapaga malolo gakwe, cimbala cangwe cikapoa.*

[4] I have drawn attention to the cathartic effect of accusations of sorcery and public confession of guilt in a paper, 'A Note on the African Conception of Causality', *The Nyasaland Journal*, v, 2 (July 1952), 57-8.

2: Mitchell E-5 (1946-1949) 1956 FT7 Yao FT7

613 memory of the ancestors. These are called *sadaka*[1] and are similar to those held at the end of the mourning period. They
769 are usually held when one of the lineage members has had a
178 dream about an ancestor. The senior members are told of this and interpret it to mean that a feast in his memory should be held. The women cook a meal of mush and relish and on an appointed day the members of the matrilineage who live within a reasonable distance gather at the village of the senior section and share the feast. During this feast Islamic texts are chanted in Arabic. It is clear that in this situation the context of the meeting is exactly the same as that of the old offerings made by the lineage leader at the shrine-tree. The common ancestor is recalled and the matrilineage by meeting reaffirms its solidarity.

The Localized Matrilineage

613 The matrilineage may itself be localized in the form of a
621 hamlet or small village, as in Ali Kasunka village. It has 9 huts situated about half a mile from Chiwalo's court house in Kawinga's area. The genealogy, hut plan and census are set out in Appendix B. I summarize the genealogy here to show how the hut owners in the village are related. The village is about 300 yards across and about a quarter of a mile from the main road.

Ali Kasunka (C6),[2] the warden of the village, formerly lived in a village known by his mother's brother's name Mailo (B1). Ali Kasunka is the son of the chieftain Mposa in Kawinga's area. The village of Mailo still exists in Mposa area. Ali Kasunka and his sisters moved out of Mailo village and established a hamlet in Malemia's area near Zomba township. While they were there Ali Kasunka went to work as a domestic servant in Zomba. One day the sister of the cook in the household in which he was
595 working came down to visit her brother. She became Ali Kasunka's second wife (he was already married to a woman from Malemia area) and lived with him in Zomba. She was the daughter of the present chief Chiwalo, and was living at her

[1] Sanderson says that this is derived from the Arabic word *sadaqa* which means 'alms'. Sanderson, M., on 'Ceremonial Purification among the Wayao, Nyasaland', *Man*, xxii, 55 (June 1922), 92-5.

[2] The reference number is to assist the reader to identify the person on the genealogy in Appendix B.

3: Seamus D-6 (on. 1912) 1922 F77 Tan F77

then listens to an account of the circumstances attending the illness and death. The point at issue is whether there is any evidence pointing to death from unnatural causes which requires consulting a diviner. The chief practically always agrees with the relatives, and it is said that he will never press them to go to the medicine-ceremonially. The ceremony ends with this conference, or here may begin the long series of events described under *ushiri*.[1] 768 632

During the month subsequent to the funeral, certain taboos have to be observed. The widow may not bathe, and with the exception of the *mulu*, all who attended must refrain from sexual intercourse. At the expiration of this period, beer is brewed in the village, and all the friends and relatives are again summoned. This beer-drinking is called "the beer of mourning," or "the beer of resignation." In addition to the beer, food is provided, and everyone helps himself without ceremony. *Chindimba* is sung and danced and at the present day, bands of trained dancers attend, including *ching'ungung'ungu*.[2] A pot of beer is sunk into the ground, marking the site of the dead man's house. The night of *mutopola*[3] sees husbands and wives reunited, and the widow may go through ceremonial intercourse with a man appointed for the purpose called *lituwa* or *mbili*. Sometimes the widow refuses *lituwa*, and is given medicine instead to cleanse her; her body is then no longer "hot" and likely to bring disease to those about her. A widow does not marry again for two or three years. A young man who loses his wife has no longer any standing in her village after *mutopola*. He is usually given a present, with the suggestion that he go elsewhere. After the death of an infant, the mother is considered unclean. She sleeps on a mat apart from her husband till after the ceremony of shaving, and then undergoes a ceremonial coitus with her husband — in which case he is called *lituwa* — after which, ordinary cohabitation is resumed. If she has been a widow, or if the child was born "with disease,"[4] another man acts as *lituwa*. 765 763 [833] 587 768

The morning following *mutopola*, all the fires in the village are extinguished. A fresh blaze is then kindled with the fire-drill, *kumuya*, either in the chief's house or in some spot nearby, and from there, fire is carried to all the houses. The ashes of the old fires, the stones supporting the cooking pots, and the porridge sticks are taken to the cross-roads, and there destroyed. Everyone then shaves all his own hair, head, axillae, and pubis. The custom of the second shaving by the *mulu*, described in *Africana*,[5] is, I think, an importation from the Anyanja. A year later, beer is again brewed, and all the relatives summoned to the village to partake of it. There is dancing, but no ceremony. 769 ● [372] [302]

The Yao bury their dead in regular graveyards in wooded country, the thicker the forest the better, often two or three miles away from a group of villages. Different villages bury their dead in different parts of the burial ground; relatives are usually buried near one another. Graves are never revisited, and no one would enter a graveyard except at the time of a funeral, and then only after obtaining permission from the chief. Such spots are 764 769

[1] Vide infra, p. [illegible]. [2] Beer-drinking. [3] Murdoch, op. cit., p. 111.
[4] Vide infra, p. [illegible] and Pl. I. [5] Vide infra, p. [illegible].

3:Sudan D-5 (ca. 1912) 1932 FT7 Yao FT7

supposed to be the abode of spirits. Except in the case of chiefs, the Wayao never make any structures over their graves, like the Anyanja grass shelters, and the present-day Mohammedan earth imitations of Swahili tombs.

Chiefs, and the more important headmen, are usually buried in their own villages. Over the grave, a grass hut with a veranda is erected; the hut is covered with calico, and guns were formerly set in as veranda posts. Guns and ivory used to be buried with the corpse but these Yao, I am told, never practised the barbarous custom of burying slaves with their chiefs. Information of the death of a chief was always conveyed to other chiefs by slaves who were kept by the recipient of the message.

Since the time of the old Makanjira, the corpse of a chief always lies with its head in the direction of the old chief's grave. The grave is swept around, and the house pulled down as in the case of an ordinary man, but the grave-hut is rebuilt every year and never forgotten.

Since the burial of the dead is more or less correlated with the idea of planting seed from which progeny will spring, the natives will not bury a leper, believing that if they did so, leprosy would spring up all around them. Persons dying of an epidemic disease such as small-pox are dealt with in the same way. In these cases and in that of a man dying of ordeal poison, the body is enclosed in a mat and put up in a tree, a manner of disposing of the dead common among the Angoni and some Anyanja. Concerning death from dropsy, similar precautions are taken to those in the instance of a woman dying in childbirth,[1] and a tube is put down to the body from the surface of the ground.

A leper feeling that the end is near, will ask to be put in a hut built outside the limits of the burial ground. Here, provided with water and food for a few days, he will wait to die near the graveyard wherein he knows he cannot be buried.

Anyone who is wounded with a spear or any other weapon is not taken into the village, but is kept in a hut in the bush. If death results, the mourning ceremonies differ somewhat from the ordinary rites and are much curtailed.

Initiation Ceremonies. Under this heading I propose to deal with the three ceremonies, *Lupondo*, *Chipale* and *Litiso*. They are ceremonies of great importance in the life of the native and their educative effect for the good of the tribe is far reaching.

At *Lupondo* (*Wilapula*) the young boys attend; at *Chipale* the young girls go through their initiation and a side ceremony for young married men takes place, while *Litiso* celebrates the first quickening with child. All the ceremonies are included in the word Unyago. Macdonald in *Africana* while referring to "the mysteries"[2] gives scant information about the ceremonies and has, presumably, without much knowledge of what goes on, condemned these customs like many others as furthering "absurd superstitions." He has failed to recognize that they are occasions when a large amount of useful advice is imparted, good manners are insisted on, and tribal custom is made known. Sexual questions are dealt with in these mysteries, and, though mixed up with a large amount of superstition, a

[1] This myth, p. 256. [2] Op. cit., vol. 2, ch. 2.

3: Stanner D-5 (ca. 1912) 1922 FT7 Tao FT7

There has never been any shortage of land and therefore the planting out of gardens was a matter which caused little trouble. A man wishing to make a new garden the next season simply marked the site in the bush by cutting some trees or leaving around some patches of grass and tying the grass ends into a knot. If anyone else came along and heard this plot, the man who had marked it out still claimed it and need not pay for the losing down. Whenever a man was doubtful about a piece of land, he would ask advice of the headman of the village. 423

When an abandoned garden had become overgrown, anyone wishing to take it up applied to the headman who sent him to ask the original owners whether they wished to take it up again. The newcomer could take possession only with their permission. 361

Often if a village were moved, during the first season the people simply put up shelters in their gardens. Later, the site of the village was chosen and around it a medicine was sprinkled medicine to insure happiness and prosperity. The tree from which this medicine was made became sacred to the village and might not be used for firewood, or was subject to any other taboo the medicine man might care to make. He might also say, "In this village there shall be no pounding of grain at night," etc. 423 [189] [178]

If a village were to be built near a spot previously inhabited, medicine and offerings were made to the departed spirits of the former occupants to put them at rest and "open" the place to the newcomers. The bone got from the grave of some former chief or headman, who was supposed to have directed the destinies of the old village, was brought to the new location and bone placed in it to insure his continued guidance. [361]

In the case of a village into which a number of men had married, the spouses of the wives went to the spouses of the husbands and asked permission to move the village. Later, beer was brewed in the new village and the spouses invited to come and drink and "put feet in the new village." [203]

Relationship. Family relationship among native presents certain difficulties to the European unaccustomed to equivalent relationship of males and females on both sides of the family. In the diagram below (Fig. 1) the relationship of the two children (C 8) will be found. The mother and father (B 10 and 9) are the mihlolo and mwa but are addressed as *mwa* and *atati*. The maternal males older and younger than the mother (B 11 and 16) are called *ahombwa* and their wives (B 12 and 15) *ahongwa*. The maternal aunts are addressed as *mwa*, mother, anyone older than the mother being distinguished as *mwa mahokongwa*, "the bigger" (B 13), a younger aunt as *mwa nanondi*, "the lesser" (B 17); their respective husbands are addressed *atati*, *atati mahokongwa* (B 14), and *atati nanondi* (B 18). On the father's side the males are called *atati mahokongwa* (B 1) and *atati nanondi* (B 5), respectively, for those older and younger than the father, and their wives *mwa mahokongwa* (B 2) and *mwa nanondi* (B 6). The paternal aunts are called *atati mahongwa* (female mother) (B 3 and 7), their husbands (B 4 and 8) *atati*. 593 601

* Vide supra, p. 200.

one is he "God the creator," of man or earth. He, however, receives the spirits of the dead. Should he refuse to do so, a man continues to live. When a man has recovered from some commonly fatal disease, the natives say, "*Mulungu* unkanile (refused him)!" or if he has been very near to death and then recovers, they say "*Mulungu* unamile (spat him out)". 776

It would thus appear that among the spirit hosts there is a regular law of precedence, and presiding over all is a supreme being, but all this is so remote as to have little importance for the living. The vagueness concerning *Mulungu*, I must admit, has given rise to some doubt in my own mind as to how far he was a deity with an entity of his own in their religion of a little time ago.

Ancestors tend to be forgotten in proportion to the length of time which has elapsed since their death, unless they played some important part during their lives: then some particular one may be remembered to the exclusion of others, and to him prayers of intercession are offered. In the case of chiefs, the names of a long line of rulers may be remembered on occasions when all else about them has fallen into oblivion. It seems possible originally *Mulungu* was the oldest ancestral chief who was raised up as a supreme being but who, in the process, has lost all other attributes. On the other hand, the word often refers only to the place where the spirits dwell; this may have been the original meaning. 769 776

There is no religious worship in the proper sense of the term but only propitiation, prayer for intercession, and return of thanks for favors granted. The keynote of this ancestor worship, the sum total of their religion to the exclusion of the belief in a supreme being, is fear. We have seen at the funeral that everything is done to lay the spirit at rest. The people wish never to hear of the spirit again. It is chiefly with a view of averting some evil that worship takes place or with a view of expiating some crime that sacrifice is made or to alleviate some suffering that communication is sought with the spirits. It is a question of, "Do us no harm, do not vent your wrath upon us for what we have left undone," rather than "Keep us from doing evil, save us from being our own enemies." It would appear to be a religion of spite, not of love and kindness, though there are glimmerings of a search after "a hand to guide and protect," as in the prayer given below and also in the action taken when removing a village. 769 [771]

As a corollary of this system of ancestor worship, there is no real priesthood. A man asks for favors for himself; the head of a family petitions a deceased father or some more remote ancestor of greater importance; the headman intercedes on behalf of the village with the spirit of a predecessor; a chief takes the place of high priest on the occasion of a tribal supplication to a former ruler, though he may be replaced by some one of his wives who acts as intermediary. [773]

Some form of sacrifice is offered with the prayer, and often some omen is sought as a sign that the prayer is granted. For this purpose, flour made from millet called *ulupani* (*ucuzile*, Chin.) is commonly used. The word *ulupani* probably includes any sacrificial offerings.

769 484 787 A man leaving his village on some expedition and wishing to be assured of safe conduct will procure some millet flour. Going quietly into his house, he squats down in one corner and gently sifts the flour through his hand so that it falls on the floor in the form of a little cone, repeating as he does so, his prayer for safe conduct beginning and ending with the word *chonde!* please!

[539] *"Chonde! chonde! wa-ku-mdanga ambaje mlungwaje nawa gwaje nilinawa*
"Please, please! those at above ancestor chief eyes mine that I may see
lilole, ngwiche 'chawaw kungwije, chonde! chonde! chowonde!"
the path, may I arrive well where I go, please, please, please!"

He then covers the cone of flour with a basket. On the morrow, he will uncover it to see what has happened. According as the cone has remained intact or has fallen to one side or the other, the omen indicates whether or not the journey should be undertaken, the reaction being caused by the spirits to whom his supplication was addressed.

769 Again, there may have occurred much sickness in a village and the people conclude that the pest has come to remind them that they have not been attentive to their deceased chief. "His grave-house in the village has been allowed to fall into decay," and so on. They will decide that his spirit must be propitiated. The grave-house is rebuilt, a pot is sunk in the ground, and beer is poured in, and round about heaps of flour are placed. Prayer is made to the chief at whose grave they are worshipping, supplicating him in person and "all others who are with you at *Mlungu*," asking that he will no longer cause ill to befall the village.

When a village is moved, the beer-pot from the grave of the old chief is taken to the new village and a ceremony similar to that just described takes place, with the prayer that he will come to the new village and continue to exercise his benevolent care over his people.

731 769 In 1890 when there was a threatened famine on account of long drought in Ecuba district, Malemya decided that supplication for rain must be made to the spirits of his illustrious predecessors. Kasunga, one of Malemya's wise men, acted as high priest. A large amount of beer was brewed and the night before the ceremony, twenty sheep and fifty goats were slaughtered. Plates of the meat, of rice and porridge were then placed on the ground round the grave-house of the old Malemya, and pots of beer set into the ground at intervals. At the head of the grave, little heaps of *mbopai* flour were arranged. This flour had been prepared by such of Malemya's wives as were not near a menstrual period. The following morning, a fence was built round the grave, outside which all the people collected, while beyond them again was a second fence. Kasunga, accompanied by an assistant then appeared, and amid absolute silence entered the inner enclosure. He addressed to the old Malemya, at whose grave they were all assembled, a prayer for rain. He then repeated the prayer, invoking the aid of all the past line of chiefs down to the reigning Malemya, repeating their names. Returning to the outer enclosure, he again uttered the prayers, all the assembled multitude repeating them after him while lying face down, resting on their

[546]

3:Stannus D-5 (ca. 1912) 1922 FT7 Yao FT7

516 731 769

knees and elbows, at intervals swaying their bodies from side to side and clapping their hands. Kasunga then ordered all to go and bathe, men and women separately. As they returned from the stream, rain began to fall.

755 769

Intercession on behalf of the sick may be made, especially by anyone who is likely to be accused of causing the illness by witchcraft.[1] The man standing with arms outstretched, downwards and a little in front of his body, the hands supine, takes some water in his mouth and discharges it in a stream on the ground, (probably as a sign of purification of his tongue), and then invoking "all the spirits above," asks that they will intercede to restore health to the sick man and bear witness to his own innocence of any wish to do the sick man injury. *Ku-penga* is the word meaning to offer sacrifice and prayer.

769 241 782

Harvesting and hunting are occasions when sacrifices may be offered. It was formerly the custom for the chief to determine the day on which harvesting of millet should begin. On the day appointed, a big drum was beaten in the village and word passed round; then everyone would go down to his garden, gather a head of millet, and bring it back to the village where it was all handed over to the chief's headwife. After drying and threshing, a little of the grain was laid at the grave of an old chief by one of the reigning chief's advisers, the remainder being again distributed to all the people gathered together in the village meeting-place, who ate it raw. After this ceremony, harvesting began.

In passing through a millet garden, if a child asks his mother to give him some to eat, she plucks a bunch or two and reverently laying one at the foot of a *mawo* tree for the spirits or at the base of some other tree, if she cannot see a *mawo*, she gives the rest to the child.

782 224

When a hunting expedition makes its first killing, part of the flesh of the animal is laid at the base of a tree as a thank offering to the spirits and in anticipation of further favors to be conferred. All such offerings are supposed by the natives to be partaken of by the spirits, though they are well aware that they do not actually diminish in quantity. There is an interesting point in this connection: any man who has acted as *ubile* (undertaker) to some well-known man may appropriate these offerings. In the case of the hunting offering, he will run round the tree, saying, "I am a hyæna, the spirits will not mind me," and will then take part of the flesh-offering and eat it.

In the same way, a *ubile* may drink from a grave beer-pot after three days, when the spirits are supposed to have taken what they want.

824 778

With the exception of the *mawo* tree above mentioned (*mkwa*, Chin.), and possibly another called *mulo-ngoma* (Chin.), which is never used as firewood and which is supposed to be used by *nsumi*, I do not think there are any sacred trees properly so-called. Miss Warner supposes that many of the big trees (often a species of *Ficus*) in villages are sacred.[2] The truth is, I believe, simply that a village is made naturally round a big tree which conveniently offers its shade for the village meeting place. The spirits of deceased chiefs may

[1] Vide supra, p. 300.

[2] The natives of British Central Africa, op. cit., p. 40.

3:Stanner D-5 (ca. 1912) 1922 FT7 Yao FT7

539

18. *Chambuge, wetile ngunga ndisi!*
Chambuge, they ate guinea-fowl raw!

An expression depending for its meaning on the story given below, used by a husband to his wife or by one woman to another, intimating that the woman has delegated her work to some one else and is not looking after things properly. A man killed a guinea-fowl and gave it to his wife to cook. She, however, gave it to her servant, Chambuge, to cook in the house while she sat doing nothing on the veranda, calling from time to time to know whether it was cooking well, to which always came answer in the affirmative, "eh." When the meal of porridge was ready in the evening, and she went to get the guinea-fowl from the pot in the kitchen, she found that it lay in the pot in cold water as her servant had only put one handful of grass to make the fire under the pot and then left it.

19. *Ku-n'mdike nungule akunapusi*
By holding a torch shift (to see if the hare was asleep) before it had lain down!

An expression used to a man who by precipitate action without due caution loses that which he seeks to gain as in the following case: If a man seeks a girl in marriage whom he wants to take to live with him far away in his own village, instead of himself settling in her village according to custom, he must not let this be known or he would be refused.

20. *Walonjo mtile!*
(Your wife) she is showing the porridge stick!

An expression used to a man who is henpeck.

21. *Mtu wa kalumbale!*
(He has or you have) the perseverance of a mitar!

An expression used to anyone who keeps on asking for something and is a nuisance.

22. *Mkapusi kapulungu ka mwa ni ku ndunya kumbusi!*
The flour (ought) to be painted on the forehead and on the back of the head also!

Mkapusi is the offering of millet flour to the departed spirits, or as here, the sacrificial flour used by the chief to smear the front and back of the head of each boy at the end of the initiation ceremonies. The meaning of the expression is that "one should not only look forward to the good things of the future but also remember all the help that has been given one in the past." [769]

23. *Mkwajingle mwa'wenile ngumbu pa tuku!*
He who comes and goes and comes again they shot him with an arrow in the buttocks!

Of which the meaning is "a man may do wrong once but if he continues to do so, he will suffer for it."

24. *Lipulume kpumbile ulula!*
The pig was made a scapegoat (on account of) the gleanings!

A pig who was found picking up the remnants of a crop in a field which had been reaped, was thought to be the thief and killed.

7: Hetherwick M-5 (ca. 1900) 1902 FT7 Yao FT7

present fortunes. But it is to the human soul after death, when it is considered as having an influence on the lives and fortunes of those it has left behind in the world and consequently as a power to be propitiated and honoured, that the term *mulungu* is more strictly applied. Freed from the body it passes to *mulungu*, and there is regarded as endowed with powers which it never possessed when alive on earth. To pray to such a spirit is described as *kulomba mulungu*, to worship *mulungu*, never *kuabo* in this case. Such *mulungu* worship enters largely into Yao religious or social life. In almost every Yao village there will be found a shrine which is the centre of the worship of the inhabitants. It consists of a carefully built hut enclosed within a strong grass fence or hedge of a species of cactus plant. The hut itself is built of the usual native materials—the walls of wooden posts, bamboos, and strong reed grass bound together with bark-rope and plastered over with clay or stiff mud. The roof is of grass laid on a framework of bamboos, and is generally covered with long strips of white or coloured calico. On the ridge or apex of the roof are fixed a couple of flags or an umbrella or two. One wall is usually left open so that the interior is easily seen. Within, from the bamboo rafters are suspended handkerchiefs, cloths, bunches of beads, etc., all offerings to the *mulungu* of the dead headman or chief from his friends and relatives. The floor is of clay carefully smoothed with sand in native fashion. A raised platform or mound of earth in the centre marks the spot where the grave was made. The *ambo* or officials who preside at the funeral obsequies, first dug for about 8 or 10 feet down in a perpendicular direction, and then on the western side of this well they hollowed out a shallow cave in the earth. In this the body was placed, laid on its side with the knees bent up under the chin, and the face turned towards the east. Various articles of personal property were next placed beside the corpse, clothes, ivory, guns, axes, hoes, etc., and the mouth of the cave closed up with wooden posts and a strong reed mat. The grave was then filled in and the surface carefully finished as we have seen. At the head of the mound a native pot was fixed in the ground for the reception of the offering of beer which is an almost invariable accompaniment of any act of worship paid to the *mulungu* of the dead.

Such a shrine marks the grave of almost every Yao chief or headman, and is regarded as the abode of his soul or the spot where his *mulungu* is most accessible. If his successor is about to undertake a long journey or enter on any warlike expedition against an enemy or neighbour, he must first *kutopa mlopwi*, place an offering here to secure the favour and assistance of the *mulungu* of the dead. Should a long-continued drought endanger the prospects of the grain crop, the departed chief must be solicited to send the lacking rain. A feast is first prepared, almost always of beer, sometimes with the addition of native porridge, fowl, or goats. The worshippers gather round the shrine bringing part of the food which they have prepared. Their priest for the occasion is the successor of the dead chief, sometimes one or other of the *ambo* who placed the body in the grave, or it may be that any other near relation of the dead man is chosen to represent the people and act as their spokesman. The nearer the relationship the more influence will he have with the dead.

7: Hetherwick M-S (ca. 1900) 1902 FT7 Yao FT7

with the dead. He approaches the shrine, opens the gate of the fence, takes a 769
pottful of beer and pours it into the pot at the head of the grave. Next he places the basket of porridge and the plate of meat on the mound beside it and retires. Kneeling down outside the gate facing the shrine and a few yards in front of the people he chants his prayer in a monotone, each petition commencing with "Chonde, chonde," "Please, please." All the while the people clap their hands in unison with him and sing the responses as they do in a native case in the chief's court.

When the offering has been made at the grave, the rest of the beer or other food is consumed by the worshippers. Guns are fired as a token of respect to the [535]
dead, and the rest of the day is spent in dancing.

Such shrines are to be seen in almost every Yao village where the inhabitants 778
have been located for any length of time. They are regarded with awe—the little 769
boys as they pass whisper to each other in a warning tone, "masoka." Should the village be moved to any other district, the old shrine is not forgotten. Periodical visits are made to it with the usual offerings. In cases where the old home has been occupied by a people hostile to the old inhabitants, such visits are usually made during the night, and the people awake in the morning to find that the old chief's grave in their midst has been newly repaired, and a fresh offering of food placed at its head.

Sometimes such shrines are found on the summits of hills which once may have been a refuge from the enemy in times of war, but which now lie lone and deserted. Thither in their need the people make their way with their offering of food and beer, and their prayer for rain or suitable weather for the crops. Near Blantyre such shrines are to be seen on the tops of Mount Sochi and Mount Michiru. The former is the abode of the spirit of Kankomba, and the latter of Mpalale, both old Mawri or Mang'anja chiefs who doubtless fled there seeking safety from the war of the invading Yaos, and died leaving their *mizimu* to be the *mulungu* or spirit of the mountain. Some years ago, during the fear of an Angoni invasion, the Yaos of Mount Sochi fled to the hill-top for refuge, and there the old chief Kapeni died. He was buried close to the grave of the old Kankhomba, and now, when the Yaos on Sochi make an offering, it is to the spirit of Kapeni that the homage is paid, and the shrine of Kankhomba lies neglected.

Only the graves of chiefs or headmen are thus treated as shrines of worship 554
The burying places of slaves and the common people lies away in the thick bush, 764
where only the rank grass or the thicker of old trees marks the spot. No offerings 769
are ever taken there, for such as are buried there can have no influence in the 778
spirit world. The dead are buried, the broken pot or basket is left on the grave to mark the spot, and none ever seek to go there save to lay another in the same neglected ground.

II. But the word *mulungu* is used by the Yao with a wider application. 776
Etymologically the word is connected with the root *kulungwa*, which in so many 197
of the other branches of the Bantu tongue appears as *kulu* or *kuru*, and signifies 192
"great" or "old." It is the same root which appears in the Kafir word for God,

7: Hetherwick M-5 (ca. 1900) 1902 FT7 Yao FT7

Unkulunkulu, which may therefore be rendered as "The old, old One," or "The great, great One." A like rendering may be given of the Yao form *mulungu*, the "Old One," or the "Great One." In this or a modified form *mungu* (Swahili) it appears in all the Eastern group of the Bantu tongues as the equivalent for "God" (see Father Torrend's *Comparative Grammar of South African Bantu Languages*). To trace it as Father Torrend does to any connection with Moloch, the god of the Phœnicians, is to attach undue weight to a chance coincidence of sounds.

As we have already seen, the word *mulungu* is applied to the human *kuolo* when regarded as an object of worship, or as an inhabitant of the spirit world. But it is also used to denote that spirit world in general, or more properly speaking, the *aggregate of the spirits of all the dead*. The plural form of the word is rarely heard, unless when the allusion is made to the souls in their individualities. In its native use and form the word does not imply personality, for it does not belong to the personal class of nouns. Etymologically it is classed with the leg, heart, arm, head, etc., of the human frame. Its form denotes rather a state or property inhering in something, as the life or health inherent in the body. Among the various tribes where the word is in use as we have described, the missionaries have adopted it as the term for "God." But the untaught Yao refuses to assign to it any idea of being or personality. It is to him more a quality or faculty of the human nature whose signification he has extended so as to embrace the whole spirit world. Once after I had endeavoured to impress an old Yao headman with the personality of the Godhead in the Christian sense of the term, using the term *Mulungu*, my listener began to talk of "Che Mulungu," "Mr. God," showing that originally to him the word conveyed no idea of the personality I was ascribing to it.

And yet the Yao approaches closely to the idea of personality and a personal being, when he speaks of what *mulungu* has done and is doing. It is *mulungu* who made the world, and man, and animals. Far in the interior of the continent, toward the north-west, beyond the plains and swamps of the Lengwe River and Lake Bangwelo, there lies, in Yao legend, an island in the midst of a lake called Kapirilimya. On that island there is to be seen a large flat rock marked by the footprints of men and animals of all kinds. When that rock was once a heap of moist clay, *mulungu* created all living things and sent them across the soft mass, where their footprints remained to be afterwards hardened into the imperishable rock. Such is the Yao legend of the creation of the world, and *mulungu* is always the Great Creator.

Mulungu is also regarded as the agent in anything mysterious. "It's *mulungu*," is the Yao exclamation on being shown anything that is beyond the range of his understanding. The rainbow is always "*mulungu*," although some Yaos have begun to use the Mang'anja term "uta wa Lowe," bow of Lowe.

Offerings are made to the spirit world or to *mulungu* as the great agency in the affairs of human life. Outside the village, or beside the headman's hut, may often be seen a rough shed. In this are placed the first-fruits of the new crop,

7: Hetherwick M-5 (ca.1900) 1902 FT7 Yao FT7

green maize, beans, pumpkins, peas, etc., as a thankoffering from the villagers for their harvest. This is described as *kulomba malungu*, to worship *malungu*. At the foot of the tree in the village courtyard, where the men sit and talk or work, an occasional small offering of flour or beer is placed on any special occasion in the life of the village or any of its inhabitants. This also is *kulomba malungu*. A devout native sitting down to a meal will, before beginning to eat, take out a small morsel of the food before him and throw it at the root of the nearest tree as an offering to *malungu*. On a journey a traveller will sometimes stop and lay a little flour in a pyramidal heap at the foot of a tree by the wayside or at an angle where two roads meet. This, like the others, is for *malungu*, the spirit world, the guardian of the wayfarer on his journey.

Thus the Yao presents us with three stages of animistic belief :—

(1) The human *lisoka* or shade, the agent in dreams, delirium, etc.

(2) This *lisoka* regarded as *malungu*, and an object of worship and reverence, the controller of the affairs of this life, the active agent in the fortunes of the human race.

(3) And lastly, *malungu* as expressing the great spirit agency, the creator of the world and all life, the source of all things animate and inanimate.

And yet between these three conceptions of the spirit nature no definite boundary line can be drawn. The distinction in the native mind is ever of the haziest. No one will give you a dogmatic statement of his belief on such points.

It is only through long association with them in their daily life noting actual expressions of opinion or hearing of definite acts in relation to their worship or their dead, that one can get behind the reserve with which every Yao man or woman approaches or alludes to the spirit world which lies beyond and after this.

643 782 fice to the ancestors. The other public occasion was at initiation ceremonies. A successful initiation, i.e. one in which the initiates were not beset by misfortune, depended upon the goodwill of the ancestors of the chief. Initiates therefore gathered at the chief's court-village before the initiation, when the sanction of the spirits was asked and the initiates severally blessed. After this they scattered to the bush-schools near their villages only to return when initiation was completed and the chief received them into tribal society.

643 769 The people who had submitted themselves, willingly or unwillingly, to the rule of a chief, in turn expected certain services from him. He provided them, as we saw, with mystical protection through his ancestors. On a more pragmatic plane he was able to arm and co-ordinate military forces thereby giving his people protection from attack. Within his area of rule he was a common person of final appeal in the regulation of relationships of his subjects.

In these various ways, by propitiating his ancestor's spirits on behalf of his subjects, by settling differences between subjects, by co-ordinating defence and in fact by being a unique personality in the area, the chief became the symbol of unity of his tribal group. The symbolism was clearly noticeable on the death of a chief when a short period of social disorganisation called *cipinimbe* followed. The members of the chief's village were allowed to pillage and to commit rape and other criminal acts without suffering legal action. The demise of the symbol of unity was followed by a period of disunity before the appointment of a successor restored the *status quo*.

622 [769] At the same time much of what has been said about the chief was true also of important village headmen. Village headmen also made sacrifices to their ancestors but only in domestic or village affairs. They too built up their prestige by slaving. Many villages in Southern Nyasaland to-day

10: Sanderson D-5 (ca. 1920)1922 FT7 Yao FT7

796 THE WHOLE VILLAGE IS THOROUGHLY 'SPRING-CLEANED', ALL RUBBISH

swept up, the ground round the houses is hoed clean, and the interiors remodelled. (364) Ceremonial beer is brewed by the head-wife of the chief, and after this has been drunk the ashes of the fire used in the brewing are carefully collected and taken to a *mulabana* ("cross-roads," or "diverging of paths") where they are deposited. (763) The chief, as representative of his people, bathes in special medicated water, a (627) decoction made from the bark of *ng'ungu* and *mbuna*, and the root of *ngungu*. (622) This completes the ordinary annual ceremony, at which new fire is not made.

On certain special occasions a more elaborate ritual is carried out; such occasions are the death of a chief, a threatened epidemic of infectious disease, a murder (especially by shooting) and the frequent occurrence of quarrels in the village.

In such circumstances, in addition to the ordinary *pupila* ceremony described above, the porridge sticks of the whole village are renewed and all fires extinguished. The discarded sticks and all ashes of the old fires are carried to the meeting of paths, where the former are stuck upright in the ground and the ashes piled together; (372) this is done in procession, all the people taking part. On their return to the village new fire is made by friction by either the chief or his younger brother—usually the latter; fire procured in any other way would nullify the proceedings. Finally (763) all the people bathe in the medicated water used only by the chief at the ordinary ceremony.

951 796 In addition to this special form of the *pupila* ceremony, another rite is sometimes performed after the occurrence of a murder or as prophylactic against the spread of epidemic disease. The doctor first makes a kind of trough (*lukungwa*) from the bark of *mtondwendo* or *mpupu*, and procures a *chichiliko* (or *chipungulu*) basket—used as a strainer in salt-making. Having collected his medicines he proceeds to the bank of the stream near the usual bathing-place of the village and digs a shallow hole, in which he places the basket; in this he puts the leaves of a certain thorny shrub and covers the whole with the trough, which is banked up with earth so as to be perfectly firm. He then puts his "medicines" into the trough; these are, first, the head of an iron hammer and a piece of slag, both from a smelting furnace. On top of these he puts pieces of the root of a certain tree which has many and particularly sharp thorns, and bits of bark from two trees peculiar for having very straight stems. *Having distributed these evenly along the floor of the trough, he fills* it with water and then proceeds to construct an arch over the end of the trough farthest from the stream. Two long poles, cut from a kind of tree particularly rich in sap, are planted in the ground, one at each side of the trough and close to it; these are bent over towards each other, and fastened together by means of a strip of their own bark. A bamboo is now planted alongside each, and similarly tied to its fellow. During all these preparations and throughout the ceremony it is essential that the doctor tie no knots in any part of his clothing.

The preparations are now complete, and when all the fires in the village have been extinguished the people go in procession to the spot where the doctor awaits them. All must be purely clad and must have no metal about them.

(622) The chief opens the ceremony. He steps into the trough and taking some of the medicated water therefrom in his hands he rinses his mouth with it. He then (763) offers a prayer to the spirits of his ancestors, first stating the emergency and detailing the measures which are to be taken to deal with it (new fires, sweeping, discard of porridge-sticks and shaving). The prayer over, he splashes the water in the trough over his body and passes through the arch, first throwing some gifts (beads or, in more modern times, money) into the trough. These gifts, presumably intended as an offering to the spirits, are the perquisites of the doctor, and everybody (765) is supposed to contribute in turn.

1: Tew E-4 (no date) 1950 FT7 Yao FT7

LAND TENURE

The rules governing land tenure were those which would be expected of a society which suffered from no land shortage. A man was entitled to as much land as he could cultivate, the limitation being that he should consult the headman as to his neighbours' boundaries. Abandoned gardens could only be taken up with the permission of the original cultivator.[1] 423

MAIN CULTURAL FEATURES

RELIGION

The Yao are largely Islamized. Codrington remarked that the perpetuation of this faith was distinctly antagonistic to British influence, and it received considerable attention from chiefs and headmen. Schools for the instruction of youth in reading and writing Swahili in Arabic characters were established in nearly every village, where also prayers were made at regular intervals in the day. The Moslem fasts and feasts were also observed, and the Yao were not inclined to embrace Christianity.[2] Their conversion to Islam did not take place till the nineteenth century, long after their first introduction to the Arab traders at Kilwa and Zanzibar, although they had adopted Swahili modes of dress much earlier.[3] 771 717

According to Hetherwick, Islam is strongest on the lake shore and on the east border of Nyasaland, chiefly round the old slave-trade centres. Makanjira's on the south-east side of the lake, and Domira Bay on the west, were the centres of Moslem propaganda. The Moslem population around Zomba and Blantyre consists mainly of Yao men, who have built themselves mosques in their own villages, or use the large mosques of Indian Moslem merchants. In the west districts, lower Shire, Ruo, central Shire, Lilongwe, Fort Manning, the Moslem population does not total more than 732. In the districts round Fort Johnston and Kotakota, the Moslems are one-ninth of the total population, while in Zomba district they number one-fifth.[4]

The Yao pagan religion was a form of ancestor worship. Apart from diviners and medicine men, there was no regular priestly profession. Intercession with the ancestors was performed by the chief, on behalf of the chiefdom, by the headman on behalf of the village, and by the head of the matrilineal kin for his dependents.[5] A man was qualified to approach his ancestors individually only if he had been initiated and had a house of his own.[6] 771 769

Some of the ritual duties of the chief have already been mentioned. When his people were visited by drought or epidemic, or when he fixed the day for the beginning of the millet harvest, he made an offering of flour and of beer poured into a pot in the ground at the grave of a dead chief. The village headman made similar offerings to the spirit of his dead predecessor. The spirits of the dead Nyanja chiefs, ousted by the Yao invasion, were regarded as still powerful in the homeland of their people. For instance, Kangumba, whose shrine was on Mount Soche, used to be appealed to for rain, and on the principle that the most appropriate mediator between a dead man and the living is a descendant of the former, the Yao chief, Kapeni, when he wished to propitiate 771 631 622 775 769

[1] Macdonald, 1882, vol. i, pp. 177-9; Sanson, 2, 1903, p. 180.
[2] Codrington, 1898, p. 316; see also Maples, 3, 1893.
[3] Young, T. C., 4, 1932, p. 37.
[4] Hetherwick, 4, 1922, p. 120.
[5] Watson, 1908, p. 270; Sanson, 4, 1910, p. 311.
[6] Macdonald, 1882, vol. i, p. 83.

3:Stanner D-5 (ca. 1912) 1922 FT7 Yao FT7

Tingilinga was another well-known performer; he used to do the same tricks as Kambanje. He also was possessed of an shuttle skin still is said to have been able "to tie his ears together behind the back of his head."

Mpachetula, a Yao of Mkanda, is a man with considerable renown. He is said to be able to produce a lion at will from a lion's tail and claw. He would offer to show this if there were any brave enough to go through with it. On a moonlight night, he would sprinkle on the ground in a cleared space near a village the tail of a lion held cross-wise in a piece of split bamboo. At the split end of the bamboo, he would place a lion's claw and round this, a woman's belt held in position by three bamboo pegs, around which he would draw a circle of *mkapasi* flour. Everyone would then withdraw to a hut in which the séance was to take place. After an hour or so, Mpachetula would send some one out to inspect the lion's tail where probably all would be found intact. He might then pretend to be uninterested and sleepy and suggest that some one should go out again in half an hour. Sooner or later, a man would come back, having found the tail gone; then everyone would go out to see what had happened. The pegs would be found in place but the tail and claw gone. A little way off, the split piece of bamboo would be found and further still a head or two from the woman's belt. These, Mpachetula would pick up, and leaving a little trail of flour on their way, all returned to the hut, while he whistled as if calling some one. Suddenly they would be aroused by the sound as of a lion brushing against the hut walls, as the beast-sign known to do, and next, a loud roar. Mpachetula would immediately open the door half-way so that the people could look out into the moonlight and there, a little way off, would be the lion. It would immediately advance towards the house and then, as it prepared to spring for the door, Mpachetula would offer it some of the flour in his left hand, armed with a stirring-stick, *mtiko*, in his right hand. As the lion landed, he would strike it on the head with the stick and lo and behold! the lion would vanish and the tail and claw would be found in his hand.

Superstitions. Scattered throughout these notes, particularly under *Umwi* and *Dimwa*, mention is made of practices which show a strong belief in superstition. Below are given a number of minor beliefs, and it is interesting to compare them with many well-known superstitions in other parts of the world.

1. A child who cuts the upper incisor teeth first will be unlucky. Such children used to be killed by the Yao. (Other tribes make medicine against the threatened ill-luck.)

2. A woman with polydactylism may not take food out of a corn-store. Otherwise the stock of corn will not last long. (Rudimentary sixth fingers are not uncommon.)

3. An insect called *chiqaru mwi* which lives in the mud at the bottom of pools, if killed causes the water to dry up.

4. If a boy puts a water-spider in the armpit when learning to swim, he will learn quickly.

5. A man wishing to prevent rain falling on a day he is making a journey, will wrap some of the leaves of the *mimwani* tree in his hair cloth and go without drinking.

1:Dilamma D-5 (ca. 1912) 1952 FT7 Tea FT7

6. It is believed that signs of guilt are visible in the eye of a murderer; medicine is procured in the hope of getting rid of these signs.

7. The possession of the hair of another person is supposed to give the possessor power over that person, hence a malicious man, when the patient he has been treating is cured, shaves the patient and keeps the hair until payment is made.

8. A native with light greenish-gray eyes is not to be trusted. He is said to have eyes like a cat and is called *mojo-jiri*; these eyes are rare among natives.

9. It is unlucky for a child to get into a basket; he may be burned.

10. Should a woman turn the porridge pot upside down, every one who has eaten will become constipated. For the same reason, a woman, after turning out the porridge from the pot, just touches the top of the mass of porridge with the bottom of the pot.

11. A woman will never leave the pounding stick in the grain-mortar. Should she do so the heavens would fall.

12. When a snake is killed, a knot is tied in its tail so that eating of the meat shall not cause indigestion.

13. It is unlucky to sit upon a basket, the *mawale*. The person would surely be bitten by a snake.

14. If a man committs murder, and his wife is pregnant at the time, she must sleep on the spear used.

15. Children are told that they must not eat at night; that if they are hungry, they must be quiet and try to go to sleep again. If they don't sleep and sit up eating porridge, a long hairy arm will come through the fastened door and beg for some, the voice of the woman saying:

> "*Ngwa shimbwa'shwai swapa ni mjiwa!*"
> "Give me that which you put to your mouth and throw away."

the repeated movements of the hand to the mouth (*swa*) and back to the pot being supposed to make the "hungry" think that they are not really eating but merely smelling and throwing away the food.

16. A male should not scrape the porridge off the porridge stick; this is only allowed to the woman. Should a man do so, it is supposed that when he goes hunting, he will hit anything he shoots at, only in the tail.

17. There is a saying that the men and boys may eat little pieces of porridge which fall out of the pot, while cooking, on to the supporting stones and it will give them power to escape unhurt from battle. The fragments are called *upakyulu*, (from *ku-kyula* "to escape").

18. Children are instructed to take their food sitting down instead of being in a hurry and standing to take it. They are told that if they do not obey, their porridge will not go into their stomachs but into their legs and swell out their knee-joints.

18. That portion of the gut of animals having folds of mucous membrane inside, may be eaten only by old people past the child-propagating age. If a young woman should eat it, she would have difficulty in labor.

19. It is believed that people who eat too freely of a little fish like whitebait called [illegible] get obstruction of the bowel by the wedging together of the bones. The treatment adopted is to pass up the rectum a smooth stick with a pad of rag at the end. This cannot be done by the person himself and so the aid of another has to be called in; only an intimacy, such as the relationship of brother-in-law gives, will warrant this service being asked.

20. The Tao believe that there is a little insect which lives in the ear, called *shiyuwu hyihsuda*, which tells the person what is said to him, the ear being its resort. The pupil is called *mamuda jua kin*, the child of the eye.

21. Among women, the uterus is called *nawan* (*naw* = eyes); it is supposed to be a little person who holds the foetus. When the child is born, *nawan* cannot find it and starts looking about, the movements causing the afterpains.

22. A man making his first journey to the coast used to sprinkle himself with water from every stream he crossed to give him a safe journey. In the same way, women at the present day going between Kotiba and Bhaiyyo sprinkle their babies with water from each stream.

23. An ant-like insect called *wahyantuda* (*bwahtuwuda*, *Chin.*) *bhaghdiwa* *mayhuang* is lucky. On seeing it a native pats his belly and then rubs his own, wishing for plenty of food that day. If he is embarking on a journey or beginning some enterprise, he will wrap one of these insects in a fold of his bila cloth and take it with him for luck.

24. When a native hears the *wanja* bird call (its call is like the mew of a cat), if he wants something, he immediately says, "Oh *wanja*, I want so-and-so. Be quiet and I will then be quiet, too!" If the bird ceases calling, he knows the wish will be granted. The female bird is said to be the more certain prophet.

25. The snake, *nahshahat*, which lives in trees and is of a buff clay color with green markings, is said by natives to pierce the chest and tie a knot in itself on each side so that it can only be withdrawn by cutting off one knot. When the snake is thus withdrawn, its blood mixes with that of the man and he will die.

27. Hajiwa have a habit of marking the spot where any event takes place by a stone by the side of the path, and every passer-by will add a stone for luck. In this way some large piles of stones have been made.

28. A man resting on his way home from a long journey places a stone in the fork between the branches of a nearby tree, so that on his arrival he may find his wife has put by some food for him and has not used up the day's stock of flour.

29. A shamadwa found digging in the path is said to presage the death of the Sultan's nearest relative.

30. If a chameleon is found holding on to the grass at both sides of the path, the path is "closed" and a man will turn back to his home and not proceed on his journey. It would be unlucky to continue.

31. Snakes seen in coils are a bad omen.

32. The slow-worm known as *Shendula mungulu* ("the entire open of not kills"), and the scaly ostrichs, if seen on the path, are of bad import.

33. To knock the toes against a stone on a journey is bad luck; if blood flows from the big toe, it points to good luck.

34. A man knocking the side of his foot against a stone knows that some one is speaking ill of him.

35. A person whose hands itch knows he will receive a present.

36. Tremor of the circumorbital muscles of the right eye indicates that something good will be seen. When the left eye is affected, the outcome is less sure.

37. The cry of the bird *ngulubulu* (the green turaco), indicates to the hearer that he is about to meet some one, either friend or enemy.

38. Anyone who kills one of the large *ulule-lumeto* (*Phacochoerus*) knows no *chikuse chinjiga*, will always be breaking the cooking pots afterwards.

39. The natives believe that the caterpillar of the *Hippotion osiris* moth will jump at the breast. It is called *chiwombola mawele*, "that which jumps at the breasts," and children seeing it will cover up their nipples with their hands.

40. Of *Lizulu*, the Mangoyoni, there is a saying:

"*Lizulu gapwelelangwa ushiki*"
"The hundred mangoyoni relieve each other (at) the meal"

It is said that mangoyoni assist one another when being hunted. When one is tired, a fresh one runs in so close to the pursuer that he goes after this one and leaves the tired one, and so they keep it up till the pursuer is exhausted.

41. *Chiula*, the frog. Children are told they must never kill a frog, or its spirit will come at night with porridge made of cassavaseed and make them eat it. If a small child playing with a frog kills it by mischance, he will tear off a small piece of his yellow cloth and place it by the frog as an offering.

42. *Chinalinali* (Mangoyoni, Chin.) the wound. It is said that the wound hides its body and leaves exposed its nose, so that a chicken seeing it, goes up to peck at it, whereupon the wound turns round quickly and catches the chicken with its mouth.

43. *Chinyawa*, the skunk (from *ku-nya*, to go to stool), so named on account of its odor, is said to apply the nose to a rat-hole and make wind. This will render inaccessible all the rats in the burrow and he can then dig them out at leisure.

44. *Mlinzi*, the honey badger, when hunted is always said to attack a man by attempting to seize the testicles. Natives when they hunt this animal, tie stones in their kilts clothes so that they hang down between the legs to defeat the badger.

3:Stannus D-5 (ca. 1912) 1922 FT? Yao FT?

771 774 826 539

65. A child, when one of its milk teeth drops out, stands some five yards away facing the door of the hut and throws the tooth over the roof of the hut, saying:

"*Al Mungulu* *kwe* *kwere ulye*, *ndewi* *kwenye* *kwalikwa* *'ya*"
"Oh! over tooth your there is, give me my of good one!"

Religion. The matter of the religious beliefs professed by natives of East Central Africa is one beset with many difficulties to the student of today. It has been the subject of many essays by workers in the missionary field, but the wide contact of the natives of Nyasaland with missionary effort during the past thirty years has done much to confuse the problem, and one feels that many missionaries in their writings rather color the picture with their own feelings. 771

I think probably the Yao with whom I am now concerned have a truer conception of their own beliefs than many of the subject tribes among whom mission teaching has more easily taken root. The religious beliefs of a people are to a large extent the reflection of the circumstances under which that people lives. The outstanding event to all natives is death. At death, something is lost to the body, without which life is impossible. This is the *mzimu* which may be translated "soul" or "spirit." The *mzimu* is said to leave the body of the dying man when he becomes moribund or unconscious. It appears that this same *mzimu* may leave the body during unconscious states unassociated with death, as when a man faints, in epilepsy, and during sleep. 771 761 774

Apart from this evidence of the dissociation of the *mzimu* from the living body, the Yao believe that a man's shadow is an objective manifestation of the soul and they will say "the shadow is the *mzimu*." Fear is experienced if a man jumps on the shadow of his fellow. Light is also thrown on the constitution of the *mzimu* by the belief in a certain evil-spirit which dwells in deep pools. It is called *chimale-mzui*, which means "one who may finish (drink up) all the water." The superstition regarding this evil spirit is that it can suck the blood from your shadow as you stand at the edge of the pool, till you become so weak that you fall in and are drowned. 774 774 776

After leaving the body at death, the *mzimu* goes to take up its place in the spirit-world, occupying a position corresponding to that held by the man during his life. With a truly materialistic conception, the soul is supposed to have all the attributes of the dead man, to be wealthy in proportion as the man was so on earth, and its relative position will be identical with that which he held among the living. The tribal *chief* becomes a paramount *chief* in the spirit world, the lesser *chief* holds sway in his lesser capacity, etc. We shall see that in intercession, when the tribe is threatened with calamities, it is the late paramount *chief* who is appealed to for help, and when one feudal *chief* is at war with another, the chief's dead predecessor will be called upon for aid. When a village is moved, it is from the spirit of the dead headman of the village that success in the enterprise is sought. Similarly, in family trouble, some dead ancestor is entreated to set things right, while a native 775

nor is he "God the creator," of man or earth. He, however, receives the spirits of the dead. Should he refuse to do so, a man continues to live. When a man has recovered from some commonly fatal disease, the natives say, "*Mulungu wakanda* (refused him)!" or if he has been very near to death and then recovers, they say "*Mulungu wamenda* (spat him out)".

It would thus appear that among the spirit beats there is a regular law of precedence, and presiding over all is a supreme being, but all this is so remote as to have little importance for the living. The vagueness concerning *Mulungu*, I must admit, has given rise to some doubt in my own mind as to how far he was a deity with an entity of his own in their religion of a little time ago.

Ancestors tend to be forgotten in proportion to the length of time which has elapsed since their death, unless they played some important part during their lives; then some particular one may be remembered to the exclusion of others and to him prayers of intercession are offered. In the case of chiefs, the names of a long line of rulers may be remembered on occasions when all else about them has fallen into oblivion. It seems possible originally *Mulungu* was the oldest ancestral chief who was raised up as a supreme being but who, in the process, has lost all other attributes. On the other hand, the word often refers only to the place where the spirits dwell; this may have been the original meaning.

There is no religious worship in the proper sense of the term but only propitiation, prayer for intercession, and return of thanks for favors granted. The keystone of this ancestor worship, the sum total of their religion to the exclusion of the belief in a supreme being, is fear. We have seen at the funeral that everything is done to lay the spirit at rest. The people wish never to hear of the spirit again. It is chiefly with a view of averting some evil that worship takes place or with a view of expecting some crime that sacrifice is made or to alleviate some suffering that communication is sought with the spirits. It is a question of, "Do as we have, do not vent your wrath upon us for what we have left undone," rather than "Keep us from doing evil, save us from being our own enemies." It would appear to be a religion of spite, not of love and kindness, though there are glimmerings of a search after "a friend to guide and protect," as in the prayer given below and also in the action taken when removing a village.

As a corollary of this system of ancestor worship, there is no real priesthood. A man asks for favors for himself; the head of a family petitions a deceased father or some more remote ancestor of greater importance; the headmen intercede on behalf of the village with the spirit of a predecessor; a chief takes the place of high priest on the occasion of a tribal supplication to a former ruler, though he may be replaced by some one of his wives who acts as intermediary.

Some form of sacrifice is offered with the prayer, and often some cause is sought as a sign that the prayer is granted. For this purpose, flour made from millet called *ulupani* (*ucuzu*, Chin.) is commonly used. The word *ulupani* probably includes any sacrificial offerings.

776 origin of mankind is explained in a story given elsewhere; *Mulungu* takes no part, nor is
773 the supernatural even invoked in explanation.

●791 The religion of the Tao may then be summed up as monotonic worship plus an ill-defined, uncertain belief in a supreme being. Their religion is not animistic. There are certain spirits of evil, demons, fairies and supernatural beings and animals which, however, do not play any real part in their religious beliefs.

531 Native Sayings. Natives are very fond of sayings, many of which are of the same nature as our own proverbs. The meaning of many of them is, however, not always self-evident but depends on some little story with a moral.

The following are some of those which I have collected among the Tao near Zomba:

1. *Ahemula khumbule!* (*to Spoiler*)
   Ho ungile a lak, (*to mount*)

An expression meaning "He slipped down." The variations being used when wet or when dry under foot.

2. *Ciwoko ali m'maso!*
   Crossing is in the eye (*witches*).

An expression meaning "Look out; some one is after us!"

   Kalulu chagawe!
   Rabbit be *skinned!*

This is a Mang'anja equivalent to the above.

3. *Chenyerekwe mwakhalakhala mwiyowaki!*
   A thing that did not listen they cooked in among the herbs!

An insect which had not listened to advice about the dangers of stirring on herbs used as vegetables, was gathered up by a woman and cooked with them.

An expression used with the sense "If you do not take advice and anything happens to you, it will be *your own fault.*"

4. *Mala ali m'maphewoka!*
   Medicine is in the *mat!*

Meaning "You are forewarned; it is your own look out!"

5. *Kangakwawa wamkulu akhalakhala!*
   Mr Would-Be-Clever they left with the *skull!*

Ka-kakwawa, to be clever (*to show off*); an expression made to a newcomer who unbidden joins in a discussion. It has reference to the following story and means that anyone joining a party unbidden may find himself in an awkward situation. Some strangers came to a village, and after being given food and quarters, all retired for the night. One of them, however, Mr. Would-Be-Clever, hearing something going on outside crept out of the house to find out what was happening. Seeing some people playing at ninth-ball, he

T: Hetherwick M-S (ca.1900) 1902 FT7 Tao FT7

grass mats, beans, pumpkins, peas, etc., as a thanksoffering from the villagers for their harvest. This is described as *kalombo* mulungu, or worship mulungu. At the foot of the tree in the village courtyard, where the men sit and talk or work, an occasional small offering of flour or beer is placed on any special occasion in the life of the village or any of its inhabitants. This also is *kalombo* mulungu. A decent native sitting down to a meal will, before beginning to eat, take out a small morsel of the food before him and throw it at the root of the nearest tree as an offering to mulungu. On a journey a traveller will sometimes stop and lay a little flour in a pyramidal heap at the foot of a tree by the wayside or at an angle where two roads meet. This, like the others, is for mulungu, the spirit world, the guardian of the wayfarer on his journey.

Thus the Tonga presents us with three stages of animistic belief :—

(1) The human *kaulo* or shade, the agent in dreams, delusions, etc.

(2) This *kaulo* regarded as mulungu, and an object of worship and reverence, the controller of the affairs of this life, the active agent in the fortunes of the human race.

(3) And lastly, mulungu as expressing the great spirit agency, the creator of the world and all life, the source of all things animate and inanimate.

And yet between these three conceptions of the spirit nature no definite boundary line can be drawn. The distinction in the native mind is over of the broadest. No man Will give you a dogmatic statement of his belief on such points.

It is only through long association with them in their daily life noting actual expressions of opinion or hearing of definite acts in relation to their worship or their dead, that one can get behind the reserve with which every Tonga man or woman approaches or alludes to the spirit world which lies beyond and after this.

to be initiated according to the Tao custom (*kpanda*). In general, the Nguru headmen are village headmen in the same way as the Tao are and they follow the same pattern in political behaviour.

At the moment, throughout the area, the various tribal groups live in kinship clusters so that under one Tao administrative headman there may be two or three unrelated Tao kin-groups and possibly one or two Nguru groups living quite separately. Though the population in the area as a whole is mixed, usually the village groups are tribally homogeneous. So far little inter-marriage has taken place. I shall not here analyse this situation, though it is politically pregnant. In many ways the Nguru immigrants are more progressive than the Tao. Most Tao in this area are professed Moslems and do not attend the local schools which are Christian. However, the missions have been more successful among the Nguru and they are becoming more educated and advanced. A good proportion of the Government posts in the area is filled by Nguru for this reason. This is more significant in the context of the general situation as will become apparent in the description below. For the rest of the paper I shall consider the political structure as I see it, in terms of the social personalities in the structure, and the presence of these non-Tao groups is implicit in the rest of this analysis.

V. The Political Structure

the Administration has persuaded the chief to pass and the full significance of which lies in a system of European values. These systems of values are foreign to each other in many features. Opposition between the two groups, White and Black, must arise if their behaviour is affected by different sets of values. The Tao, for example, believe that most deaths are caused by sorcery and claim the right to take punitive measures against the sorcerers. The Whites do not believe in this and prevent punitive action against people

11: Sanderson D-5 (ca. 1920) 1920 FT7 Yao FT7

RELATIONSHIPS AMONG THE WAYAO.

By Meredith Sanderson,
Medical Officer, Nyasaland Protectorate.

Introductory.—Various writers have attempted to give English equivalents to the Yao terms denoting relationship, or have alluded to the outstanding features of the system, but I am not aware that anybody has hitherto worked out the whole system. [12]

Although it is very similar to other classificatory systems, I feel that a description of it may not be quite valueless, more especially on account of the evolutionary changes that are taking place.

The WaYao are a Bantu tribe, exogamous but not totemic, which until the middle of the last century inhabited that part of Central Africa lying to the East of Lake Nyasa, particularly in the valleys of the Lujenda and Ruvuma rivers. Up to that time the tribe had not extended far from the area inhabited except perhaps in a southerly direction, but owing to constant intermecine war in their own territory the Yaos then invaded and conquered a large part of the neighbouring territories, especially to the south, in what is now called Nyasaland. [10] [3]

I have said that the WaYao are not totemic, and that statement is correct at the present time. Opinions differ, however, as to how recent their loss of totemism is; though their initiation ceremonies are generally regarded as totemic, even there, in my opinion, the evidence is not conclusive, and there remains no suspicion of totemism outside those ceremonies. [9] [11]

It should be mentioned that Islam is much more prevalent among the Yaos than among their neighbours, but its influence is not yet so deep-rooted as greatly to obscure the pure tribal customs, except to a certain extent among the rising generation. [19]

To facilitate description the relationships are given in tabular form, the relationship being given with reference to one man or woman. [18]

In Table I, Column 1 describes the relationship, Column 2 gives either the nearest equivalent of the Yao term, or, if none, the actual terms. Columns 3-6 give the various relations of the person named in Column 1, as they would be named by the man or woman under consideration. [6]

For example, the brother of (*x*)'s father (Column 1) is regarded as (*x*)'s father (Column 3), the wife of (*x*)'s father's brother is (*x*)'s *alongo* (Column 5), their child a his "brother" or "sister" (Column 6), and so on (see Table I).

Lwembe Mtungu is the prophet of Isoma, a man of great height who walks the round of the country, stepping from hill-top to hill-top along "the fairy way," the "*Mlire wa Lwembe Mtungu*," which is supposed to run right around Nyasaland and never to cross a river, starting and ending somewhere near the junction of the Shiré with the Zambezi river. As he goes, he can be seen from a hundred miles away. He carries the kalimba instrument and plays as he walks, singing:

"*Kalimba* [illegible] *wapa* [illegible] *Indipa wanje* [illegible] *mutundu wamisha ndai*"
"Two my wet (in trouble) with the midges therefore I must call up the wapa, this source of hunter!"

which might be rendered, "Two people grumble about small troubles, so I will teach you to know better by inflicting great ones." When he is seen, there will be famine.

It will be convenient here to allude briefly to some of the beliefs connected with meteorological phenomena, as some of them have a bearing on native religious beliefs. The remarks made under this heading for the *Anyanja* hold good for the Yao. The morning and evening stars are called *Kwanidzo* and *Mwanyalenge*, the good cook and the bad cook. They are looked upon as the two wives of the moon, one of whom feeds him so well that he grows fat, the other who does not, so he wastes away. The constellation of the Pleiades is called *Nindu*; the Milky Way, *Lichinga mulu*, "the watcher of the night," when high in the heavens, down in south. When shooting stars are seen, natives exclaim "*mapolo ndajo!*" *Mapolo* is a many-pointed arrow. Eclipses are recognized but no explanation is vouchsafed. Thunder is supposed to be the noise of rain falling in the heavens before it reaches the earth. The rain is sometimes supposed to be the condensing steam from an enormous pot of water boiling over a furnace fire in heaven. The lightning is conceived as a lizard-like animal which dwells in the clouds and darts out from behind them and comes to earth and breaks up trees and may kill a man. Mire is supposed by the Yao to be its excrement. The animal is called *Njoci*, and is the same as *Mpondo* of the *Achipeta* who consider the mire to be the broken egg-shell of the lightning dragons' eggs. There is a large red compound lily, a species of *Hamanthus* also called *Njoci*, which is in some way connected with the lightning. No Yao child would ever touch this flower. Children are always advised never to seek shelter under a big tree but always to cuddle for a bamboo thicket, for if the lightning strikes the bamboo and splits it, it will get caught inside the hollow stem.

Gales of wind are said to emanate from a plant called *Chanpala*. It is described as having two proboscis like an elephant's trunk and others like two fingers. It is found on the tops of very high mountains, growing alone and surrounded by bare rock. This plant is used by medicine men to gain supernatural powers. *Chanpala* is also the name of a parasitic plant on the charcoal trees in Nyasaland.

The world is taken by the natives as they find it; to them no explanation for its being is necessary. So far as I can find out, there is no idea among the Yao of a Creator. The

776 religion of mankind is explained in a story given elsewhere; *Mulungu* takes no part, nor is
775 the supernatural even invoked in explanation.

The religion of the Tsa may then be summed up as amounting to a vague, ill-defined, uncertain belief in a supreme being. Their religion is not animistic. There are certain spirits of evil, demons, fairies and supernatural beings and animals which, however, do not play any real part in their religious beliefs.

791

Native Sayings. Natives are very fond of sayings, many of which are of the same nature as our own proverbs. The meaning of many of them is, however, not always self-evident but depends on some little story with a moral.

The following are some of those which I have collected among the Tsa near Zomba:

1. *Ahomuzile khumbata!* (or *kpuka!*)
   He caught a fish, (or monkey)

An expression meaning "He slipped down." The exclamation being used when wet or when dry under foot.

2. *Chenda ali w'mwa!*
   Cunning is in the eye (evident).

An expression meaning "Look out; some one is after us!"

   Kalulu dangwa!
   Rabbit be clever!

This is a Mang'anja equivalent to the above.

3. *Changwilowa wachikhulukhulu wanyanda!*
   A thing that did not know they ended in among the herbs!

An hoax which had not listened to advice about the dangers of eating on herbs used as vegetables, was gathered up by a woman and cooked with them.

An expression used with the sense "If you do not take advice and anything happens to you, it will be your own fault."

4. *Wisle ali w'mapilondo!*
   Medicine is in the cast!

Meaning "You are forewarned, it is your own fault cast!"

5. *Fungulowale wamkulu chikulukuwa!*
   Mr Would-Be-Clever they left with the draft!

Ku-kulumuka, to be clever (to show off); an expression made to a newcomer who exhibits jokes in a discussion. It has reference to the following story and means that anyone joining a party unknown may find himself in an awkward situation. Some strangers came to a village, and after being given food and quarters, all retired for the night. One of them, however, Mr. Would-Be-Clever, hearing something going on outside crept out of the house to find out what was happening. Seeing some people playing at match-ball, he

Udzimkulu, which may therefore be rendered as "The old, old One," or "The great, great One." A like rendering may be given of the Yao form *mulungu*, the "Old One," or the "Great One." In this or a modified form *mungu* (Swahili) is apparent in all the Eastern group of the Bantu tongues as the equivalent for "God" (see Father Torrend's *Comparative Grammar of South African Bantu Languages*). To trace it as Father Torrend does to any connection with Moloch, the god of the Phoenicians, is to attach undue weight to a chance coincidence of sounds.

As we have already seen, the word *mulungu* is applied to the human *kalu* when regarded as an object of worship, or as an inhabitant of the spirit world. But it is also used to denote that spirit world in general, or more properly speaking, the *aggregate of the spirits of all the dead*. The plural form of the word is rarely heard, unless when the allusion is made to the souls in their individualities. In its native use and form the word does not imply personality, for it does not belong to the personal class of nouns. Etymologically it is closest with the leg, heart, arm, hand, etc., of the human frame. In form denotes rather a state or property inhering in something, as the life or health inherent in the body. Among the various tribes where the word is in use as we have described, the missionaries have adopted it as the term for "God." But the untaught Yao refuses to assign to it any idea of being or personality. It is to him more a quality or family of the human nature whose signification he has extended so as to embrace the whole spirit world. Even after I had endeavoured to impress on old Yao Imbuwa with the personality of the Godhead in the Christian sense of the term, using the term *Mulungu*, my listener began to talk of "Che Mulungu," "Mr. God," showing that originally to him the word conveyed no idea of the personality I was searching to it.

And yet the Yao approaches closely to the idea of personality and a personal being, when he speaks of what *mulungu* has done and is doing. It is *mulungu* who made the world, and men, and animals. Far in the interior of the continent, toward the north-west, beyond the plains and swamps of the Lungwa River and Lake Bangweulu, there lies, in Yao legend, an island in the midst of a lake called Kapitinjya. On that island there is to be seen a large flat rock marked by the footprints of men and animals of all kinds. When that rock was once a lump of moist clay, *mulungu* created all living things and sent them across the soft mass, where their footprints remained to be afterwards hardened into the impressible rock. Such is the Yao legend of the creation of the world, and *mulungu* is always the Great Creator.

Mulungu is also regarded as the agent in anything mysterious. "It's *mulungu*," is the Yao exclamation on being shown anything that is beyond the range of his understanding. The rainbow is always "*mulungu*," although some Yao have begun to use the Mangwanja term "*ula wa Lungu*," bow of Lungu.

Offerings are made to the spirit world or to *mulungu* as the great agency in the affairs of human life. Outside the village, or beside the headman's hut, may often be seen a rough shed. In this are placed the first-fruits of the new crop,

3:Swanne D-5 (ca. 1912) 1922 F77 Tao F77

771
784
826
539

68. A child, when one of its milk teeth drops out, stands some five yards away facing the door of the hut and throws the tooth over the roof of the hut, saying:

"Ai Mungulu [illegible] [illegible] [illegible] [illegible] [illegible]
"Ohi [illegible] tooth your there is, give me my of good [illegible]"

771

Religion. The matter of the religious beliefs professed by natives of East Central Africa is one beset with many difficulties to the student of today. It has been the subject of many essays by workers in the missionary field, but the wide contact of the natives of Nyasaland with missionary effort during the past thirty years has done much to resolve the problem, and one finds that many missionaries in their writings rather solve the picture with their own feelings.

771
761
774

I think probably the Yao with whom I am now concerned have a truer conception of their own beliefs than many of the subject tribes among whom mission teaching has more easily taken root. The religious beliefs of a people are to a large extent the reflection of the circumstances under which that people lives. The outstanding event to all natives is death. At death, something is lost to the body, without which life is impossible. This is the mzimu which may be translated "soul" or "spirit." The mzimu is said to leave the body of the dying man when he becomes mentally or unconscious. It appears that the same mzimu may leave the body during unconscious states unassociated with death, as when a man faints, in epilepsy, and during sleep.

774

Apart from this evidence of the dissociation of the mzimu from the living body, the Yao believe that a man's shadow is an objective manifestation of the soul and they will say "the shadow is the mzimu." Fear is experienced if a man jumps on the shadow of his fellow. Light is also thrown on the constitution of the mzimu by the belief in a certain evil-spirit which dwells in deep pools. It is called shimalo-mwi, which means "one who may finish (drink up) all the water." The superstition regarding this evil spirit is that it can suck the blood from your shadow as you stand at the edge of the pool, till you become so weak that you fall in and are drowned.

774
774
776

After leaving the body at death, the mzimu goes to take up its place in the spirit-world, occupying a position corresponding to that held by the man during his life. With a truly materialistic conception, the soul is supposed to have all the attributes of the dead man, to be wealthy in proportion as the man was so on earth, and its relative position will be identical with that which he held among the living. The tribal chief becomes a paramount chief in the spirit world, the lesser chief holds sway in his lesser capacity, etc. We shall see that in intercession, when the tribe is threatened with calamities, it is the late paramount chief who is appealed to for help, and when one headed chief is at war with another, the chief's dead predecessor will be called upon for aid. When a village is moved, it is from the spirit of the dead headman of the village that success in the enterprise is sought. Similarly, in family trouble, some dead ancestor is entreated to set things right, while a native

775

be supposed to live in such trees. They are convenient natural objects for them to occupy, in fact practically the only ones to be found in villages. Trees may accordingly, therefore, be looked upon as in some degree sacred. About such trees strips or pieces of calico may be placed as an offering to the spirits of the departed. But the Yao do not erect little huts in their vicinity, hung about with strips of calico as is the custom among the Anyanja.

Macdonald[1] mentions the spirits in connection with Sinke and other hills round Mwaiyaya and supposes them to be the spirits of the places themselves. This I think is unlikely; they would probably turn out to be spirits bearing the names of long departed Anyanja chiefs whom the immigrant Amangoche Yao venerated just "to be on the safe side," when they had come and taken the country which long ago belonged to the former tribe. When approaching or passing any spot held to be the dwelling place of spirits, salutation is made by clapping the hands.

Spirits of the departed may enter into animals or may take the form of animals, commonly lions and sometimes large snakes (python), but this belief is not so general among the Yao as among other tribes, in my opinion. An animal which is so possessed is called *lipindo*, from *ku-pindo*, "to be transformed."

Apart from this habitation of inanimate objects above mentioned by natives, there is nothing that points to a belief in Animism among the Yao, so far as I know. Neither hills, rocks, streams, lakes, nor trees have their own spirits, nor are they endowed by the native mind with life.

Deceased persons appear to the living in dreams, the native apparently believing that the deceased appears in his material body.

They believe also in revelation of wishes of the deceased through the medium of the living. The spirit of the deceased is supposed to enter into the medium. The medium, I am informed, is always a woman, never a man. From the descriptions of some of these revelations shown, there can be no doubt that they are manifestations of *le grande hystérie*. The medium works herself up into a frenzy of excitement and in her delirium gives out the name of the deceased, the voice which speaks being that of the spirit within her. She rolls on the ground and froths at the mouth, uttering the word of revelation which is generally to the effect that some deceased chief's spirit is being neglected at the neglect of his tomb; the voice may go on to say that certain practices are forbidden, or demand that certain rites be observed by the people. The spirits which possess her are generally spoken of as *mzimu*, a word which, though sometimes used as equivalent to *mulungu*, usually seems to have rather a sinister significance. Insane persons are called *mzimu* and are thought to be possessed by a spirit, and vapor baths with exorcisms may be practised for their cure. In the case of the death of anyone who is possessed, in answer to my interrogation, I have been told that both the spirit which has entered into the case and his own *mzimu* leave his body.

[1] Op. cit., vol. i, p. 76.

7: Hetherwick M-5 (ca.1900) 1962 F77 Yao F77

SOME ANIMISTIC BELIEFS AMONG THE YAOS OF BRITISH CENTRAL AFRICA.

By the Rev. Alexander Hetherwick, M.A., F.R.G.S., of the Blantyre Mission, British Central Africa.

The original home of the Yao tribe may be roughly described as the large and lofty plateau which lies to the east of Lake Nyasa, and is bounded by the Rivers Revuma and Lujenda. Forty years ago, about the time that Livingstone first entered the country, they began to be pressed on the north by the Magwangwara, and on the east by the Makoa tribes. These invasions caused them to move, some westward down to the shores of Lake Nyasa or the banks of the Upper Shire River, and others southward to the Shire Highlands, Mount Zomba and the eastern slopes of Mount Mlanje. In every case they succeeded in either subjugating or expelling the original Mawri or Manganja inhabitants of those districts, and in no case have they lost their own independence.

Till about fifty or sixty years ago the Yao were untouched by any external influences, and when at that time the Arab and east coast traders from Kilwa and Zanzibar began to meet and trade with them they appear to have been little affected by contact with these visitors. Only a few of the younger men used to following Makonde traders, and these they only grafted on to their still cherished belief in the old faiths of their fathers. The Koran, or a few of its texts, was added to the many other charms they had already hung about their necks. The faith which the first missionaries found them in possession of when they entered the country twenty-five years ago may therefore be held to be the unadulterated creed of the tribe from time immemorial.

The foundation of the Yao religion is to be found in the *Sadze*, the soul, shade or spirit which every human being possesses, and which is the inspiring agent in his life. They profess to give no definite description of the nature or characteristics of this soul. In their minds however it is allied with the shadow, and would seem to bear to the body the relation which a picture has to the reality. Their word for a shadow is *chiwili*, which is also the term that they use to denote a picture, and pictures they associate with the shades or shadows of the dead. I have known native women refuse to enter a room where pictures were hung on the walls "because of the *mzimu*, souls, which were in them." The photographic camera was at first an object of dread, and when it was turned upon a group of natives they dispersed in all directions with shrieks of terror. "The European,"

7: Hetherwick M-5 (ca. 1900) 1962 FT7 Tao FT7

they said, "we shall be able to take away their shadows and they would die." In their mind the *kadu* was allied to the shadow or picture, and the removal of it to the photographic plate would cause the disease or death of the shadow body.

As an instance of their faith in the close relationship of the *kadu* and the picture or shadow, I may relate the following incident. An influential Yao chief on Mount Zomba with whom I was on terms of intimate friendship for years, refused to allow himself to be photographed, fearing the consequence on his life. At last I was able to persuade him to give me a sitting, but on the sole condition that the picture was to be shown to none of his subjects but to be sent out of the country as soon as possible. He feared lest some ill-wisher might use it as a means towards his bewitchment. Some months afterwards the chief became seriously ill, and in the minds of his attendants his illness was attributed to some accident having befallen the photographic plate on which they believed the picture of their chief to be imprinted. If that negative had been broken in England, whither it had been sent, their chief's illness would be accounted for. Accordingly they appealed to the divining oracle, who, however, after consulting the "bone," assured them that the picture was intact, and that in consequence the disease must be ascribed to some other cause.

The *kadu* or soul is recognized as the chief agency in dreams. To dream is, in the Yao tongue, *lowgwanda* wonder, where wonder is the plural form of *kadu*. The *kadu* is supposed to go out and visit the scenes and persons it dreams about, and in turn is visited by the souls of others, dead or living. Pains in the body on rising from sleep in the morning are usually attributed to such nocturnal visits, while disease or pains of a severer type are ascribed to contagious by the whips of the wonder or more frequently of the witches who prowl around during the night watches.

Madness, idiocy and the ravings of delirium or disease are accounted for by a similar agency. The sufferers are *ma wonder*, they of the spirits, and a sudden fit of epilepsy or insanity is described as *gukwanda wonder*, the spirits have seized him. Such persons are usually regarded with awe, as living in close contact with the unseen, but no incantations or enchantments are ever used to expel the spirit in possession. Some native doctors are credited with a knowledge of certain medicines which they say are effectual in such cases, but their application in no way differs from those employed in treating ordinary types of disease. Idiots and the insane are allowed to wander at will about the village, and only when violent symptoms show themselves as a danger to the community is any physical restraint put upon them.

The *wonder* are also recognized as the inspiring agencies in the ravings of the witch detective. This person, usually a woman, is called in to discover who is the guilty agent in cases of mysterious deaths or outbreaks of an epidemic in a village. She arrives on the scene and takes up her abode for a few days previous to her actual demonstration. She mixes with the people, learns all the scandal and gossip of the community, and at night prowls about the houses searching for

9: Hetherwick M-5 (ca.1900) 1902 FT7 Tao FT7

witchcraft. On the appointed day the *kwaw*, *kwjiw* *mundu*, to dance the spirits, or *kwamuta*, to rave or prophesy, and in the ravings of the dance she calls out the name of some party who is afterwards accused of being the sorcerer or witch. Followed by a crowd of excited spectators the *kwaw* through the village spear in hand, stopping here and there to dig up charms or medicines which the supposed witch has buried in the ground as the instruments of his occult practices. It is only in cases of supposed special difficulty, or when the magnitude of the supposed crimes demands that special measures be adopted for their detection, that the services of such a witch detective are called in. In ordinary cases these appeals are made to the divining oracle who consults his "bete" as a means of discovering crimes of this nature.

Among the Tsaw the human being is believed to be the sole possessor of a *kudu*. I have been unable to discover any trace of a theory that the *kudu* may pass into any animal or inanimate object and then confer upon it the nature or power of a *kudu*. Such belief is shunned among the *kwgwi* and *kwkwa* tribes to the westward by Ryan and the upper Shire River, and the intelligent Tsaw is aware of this, but he states that among his people no such belief exists. Even charms which have the effect of healing or warding off disease, or of protecting the bearer from war or wild beasts or other danger by land or water, are supposed to possess this power without any idea of their being possessed by a *kudu* or other spirit influence. The nearest approach to such a theory is in the case of certain powerful "doctors" who have obtained special medicine by means of which, on death, they can transform themselves into lions, leopards, crocodiles. Leopards also are sometimes supposed to become hippopotami. But both of these cases must be regarded rather as transmutations of body than transmigrations of soul.

It will be thus seen that the nature of the human *kudu* is closely allied to that of the *mundu*, which are the inspiring spirits in medicine and in the century of prophecy or incantation. What the origin of these inspiring *mundu* is, or to whom they belonged when in bodily life, the Tsaw holds no theory. He is content to accept them as they are, *mundu kpepe*, "*Just mundu and nothing more*," as he says.

It is, however, when we follow the disembodied *kudu* after death and consider its position and power in the other world that we find ourselves in a region of higher spiritual activities.

In disease or in fainting fits the *kudu* leaves the body but only to return to it with the awakening consciousness. At death, however, it leaves the earthly abode never to return. It is now spoken of as having gone to *mulungu* or *ulungu*. This word, which lies at the basis of all Tsaw theories of the place of the soul after death, will be dealt with later on as regards its derivation and connections in the Bantu family of languages. In its natural use it bears two significations.

1. The word *mulungu* is in the first instance applied to the human soul or *kudu* after death when it is considered as an inhabitant of the spirit world. Even in life a man, when he meets with any place of good luck, will be heard to say, "*Ilo my mulungu*," as if his soul had an influence in determining the character of his

1: Tew E-4 (no date) 1950 FT7 Yao FT7

Land Tenure

The rules governing land tenure were those which would be expected of a society which suffered from no land shortage. A man was entitled to as much land as he could cultivate, the limitation being that he should consult the headman as to his neighbours' boundaries. Abandoned gardens could only be taken up with the permission of the original cultivator.[1]

MAIN CULTURAL FEATURES

Religion

The Yao are largely Islamized. Cadrington remarked that the perpetuation of this faith was distinctly unsympathetic to British influence, and it received considerable attention from chiefs and headmen. Schools for the instruction of youth in reading and writing Swahili in Arabic characters were established in nearly every village, where also prayers were made at regular intervals in the day. The Moslem fasts and feasts were also observed, and the Yao were not inclined to embrace Christianity.[2] Their conversion to Islam did not take place till the nineteenth century, long after their first introduction to the Arab traders at Kilwa and Zanzibar, although they had adopted Swahili modes of dress much earlier.[3]

According to Hetherwick, Islam is strongest on the lake shore and on the east border of Nyasaland, chiefly round the old slave-trade centres. Makanjira's on the south-east side of the lake, and Domira Bay on the west, were the centres of Moslem propaganda. The Moslem population around Zomba and Blantyre consists mainly of Yao men, who have built themselves mosques in their own villages, or use the large mosques of Indian Moslem merchants. In the west districts, below Shire, Ruo, central Shire, Lilongwe, Fort Manning, the Moslem population does not total more than 7½. In the districts round Fort Johnston and Karonga, the Moslems are one-ninth of the total population, while in Zomba district they number one-fifth.[4]

The Yao pagan religion was a form of ancestor worship. Apart from diviners and medicine men, there was no regular priestly profession. Intercession with the ancestors was performed by the chief, on behalf of the chiefdom, by the headman on behalf of the village, and by the head of the matrilineal kin for his dependents.[5] A man was qualified to approach his ancestors individually only if he had been initiated and had a house of his own.[6]

Some of the ritual duties of the chief have already been mentioned. When his people were visited by drought or epidemic, or when he fixed the day for the beginning of the millet harvest, he made an offering of flour and of beer poured into a pot in the ground at the grave of a dead chief. The village headmen made similar offerings to the spirit of his dead predecessor. The spirits of the dead Nyanja chiefs, control by the Yao invasion, were regarded as still powerful in the homeland of their people. For instance, Kangombe, whose shrine was on Mount Soche, used to be appealed to for rain, and on the principle that the most appropriate mediator between a dead man and the living is a descendant of the former, the Yao chief, Kapeni, where he wished to propitiate

[1] Macdonald, Africa, vol. 1, pp. [illegible]; Sanderson, 1, 1905, p. [illegible].
[2] Cadrington, Chiefs, p. [illegible]; see also Stapleton, 3, 1899.
[3] Young, T. C., 2, 1929, p. 20.
[4] Hetherwick, 2, 1907, p. [illegible]; Sanderson, 1, 1905, p. [illegible].
[5] Hetherwick, 2, 1907, p. [illegible].
[6] Macdonald, Africa, vol. 1, p. 84.

1: Tew . E-4 (no date) 1950 F77 Tew F77

Kangunda, used to persuade Nyanja to help in the sacrificial rite. When Kapeni in turn fled to Mount Sochs from the Ngoni, and died there, the Yao addressed their offerings to him, not to Kangunda.[1] The word *Mulungu* has sometimes been interpreted to mean Supreme Being, God, Creator, but among the Yao it seems not to have a personal connotation. It was used to describe the agent in any mysterious event,[2] or the place where the ancestor spirits (*mawaka*) were supposed to dwell. Daily life was full of acts of respect towards the ancestors, who were regarded as jealous of the living, and requiring constant propitiation.[3]

Sorcery

Accusations of witchcraft and measures for dealing with it play a dominant role in Yao social life. With certain exceptions nearly all diseases and deaths are thought to be caused by sorcery. The exceptional causes are: the hand of God, old age, the transgression of certain taboos, and battle wounds. If sorcery is suspected the relatives of the sick or dead man consult the diviner to identify the offender.

Yao (in common with the Mawri and many peoples of Central Africa) believe that sorcerers have a craving for human flesh, which they satisfy by killing with magic the victims of their malice and hatred. They acquire their magical powers by an apprenticeship, which might include incestuous relations with mother, sister, or mother-in-law, or sleeping on the grave of the mother for one night. The sorcerer then learns the medicines and finally demonstrates his power by killing a young relative by magic; he waits till the victim is buried, and then conspicuously exhumes him for the secret feast with his fellow sorcerers. Each sorcerer who shares the flesh owes a debt to the one who secured the victim.

Charms are used as preventive measures against sorcery. When a diviner has diagnosed the cause of death as sorcery, retaliatory measures are taken. The headman of the village could either call in the witchfinder to identify the offender or he could call in the diviner to take action against all the sorcerers in the village. After the diviner, *Mahindlo*, had revealed the guilty ones, they were challenged to take the poison ordeal to prove their innocence. If they died, the proof and the punishment were simultaneously accomplished. If they survived, the diviner was held to have been at fault and they were acquitted. The witch doctor was supposed to entice sorcerers to the graveside, and slay them with magic more powerful than their own.

The diviner's findings are to-day checked by the poison ordeal administered to a chicken. A sorcerer detected in this way might be asked to provide medicine for the man whose sickness he had caused, or after a death he might be compelled to pay compensation. If the accused is a village headman, he will not be summoned before a chief, but his brother will take the villagers away from the sphere of his influence, or he may be chased away from the district. Accusations of sorcery follow certain regular lines. Nearly all accusations fall on relatives. Diviners are consulted by matrilineal relatives of the sick or dead person, and the man most usually accused is the brother of the accuser, or the husband of his sister. Witchcraft is therefore a manner of expressing the hostilities latent in these relations, which are, in the Yao social system, full of tension.

[1] Hetherwick, op. cit., vol. i, p. 30. [2] Hetherwick, op. cit.
[3] Hodoul, op. cit., pp. 14-15; Hetherwick, op. cit., vol. i, pp. 38-39, 104-15.

[illegible] give an excellent idea of the average figure. It is circular in plan, often with a little kiosk in the centre known as *kokoshi hongwapoki*, "the hill of duke," and disposed in the quadrants are four depressions.

[illegible] When the well are introduced to *Chingwa*, they stand round in a circle while the *a'wishida* stands in one of the depressions with perhaps two of his assistants in others. The *a'wishida* sings:

[illegible] "*Ayaw, hongwapoki chingwapoki wonapoki ningwapoki kokoshi, ewwi*
[illegible] "The kiln someone was I born duke I would have died on the plain, another!"
Ayaywaki wayawaki"

or

"I have lived by the great kiln all my life, I should have died in the plains"

while all these under movements are of pudding a cross. The depressions are said to represent crosses. I believe this is the recognized form but I have also seen an oblong figure with two outlines of considerable squares. *Chingwa* is usually found near *wahongwa*.

Chinto, when represented, stands beyond *wikoshi*. It consists of two trenches at right angles forming a cross, which are covered over with logs and earth and the whole outlined with four in a decorative pattern. The end of one limb of the cross is left open and round this opening a screen of grass is made. As the well approach *Chinto*, some of the assistants or *chowwi* descend into the trenches for the ceremony. The *a'wishida* takes up his stand at the centre of the cross and sings:

"*Chinto, cross, kwakin chinto!*"
"*Chinto, mother, cross-we chinto!*"

[illegible] Then as everyone says "Listen, listen!" crying is heard "coming out of the bowels of the earth," followed by drumming and the singing of the *chinkinin* songs (sometimes *wikoshi* or *wonki*); a horn is sometimes heard as well as *kokoshi*, trilling with the tongue against the lips. *Chinto* is called "the resting place of all departed spirits" and the sounds are said to be the echoes of their doings. The word is not used with elsewhere among the Tewa, although it occurs in the *Chingwanja* and in other languages of this country with the meaning "the heavens."

[illegible] *Chinto* is said by *Bedzawitch*[1] to be "a large fish that forms one of the pictures at the *Chingwa*," but I have never seen it or heard of it, and I am doubtful of the correctness of the statement.

[illegible] *Ching'wahong'wonki*. Dr. Dorsey's photograph[2] is an excellent reproduction of this figure, which consists of a mound of earth flattened on the top, and decorated with geometric patterns in four which extend to the ground. In the centre and at the four corners, so to speak, are implanted billets of wood with dark native lines and dots in black and red on the white wood (Pl. X, figs. I, II). The billets are three inches in diameter and project twelve to fifteen inches above the ground.

[1] Handbook of the Tewa language, op. cit., p. 110. [2] Op. cit., Pl. XII, fig. 2.

771
774
826
539

68. A child, whose one of its milk teeth drops out, stands some five yards away facing the door of the hut and throws the tooth over the roof of the hut, saying:

"*Ali Mungulu* *Iwe* *Ipwa-ipu*, *ndawi* *Ipungu* *Ipundwe* "*pu*"
"Old *mwe* *tooth your there is*, *give me* *my of good* *one*!"

Religion. The matter of the religious beliefs professed by natives of East Central Africa is one beset with many difficulties to the student of today. It has been the subject of many essays by workers in the missionary field, but the wide contact of the natives of Nyanganiland with missionary effort during the past thirty years has done much to confuse the problem, and one finds that many misstatements in their writings rather color the picture with their own feelings. 771

I think probably the Yao with whom I am now concerned have a truer conception of their own beliefs than many of the subject tribes among whom mission teaching has more easily taken root. The religious beliefs of a people are to a large extent the reflection of the circumstances under which that people lives. The outstanding event to all natives is death. At death, something is lost to the body, without which life is impossible. This is the *mzimu* which may be translated "soul" or "spirit." The *mzimu* is said to leave the body of the dying man when he becomes moribund or unconscious. It appears that this same *mzimu* may leave the body during unconscious states unassociated with death, as when a man faints, in epilepsy, and during sleep. 771 761 774

Apart from this evidence of the dissociation of the *mzimu* from the living body, the Yao believe that a man's shadow is an objective manifestation of the soul and they will say "the shadow is the *mzimu*." Fear is experienced if a man jumps on the shadow of his fellow. Light is also thrown on the constitution of the *mzimu* by the belief in a certain evil-spirit which dwells in deep pools. It is called *ahinda-mwi*, which means "one who may drink (drink up) all the water." The superstition regarding this evil spirit is that it can suck the blood from your shadow as you stand at the edge of the pool, till you become so weak that you fall in and are drowned. 774 776

After leaving the body at death, the *mzimu* goes to take up its place in the spirit-world, occupying a position corresponding to that held by the man during his life. With a truly materialistic conception, the soul is supposed to have all the attributes of the dead man, to be wealthy in proportion as the man was so on earth, and its relative position will be identical with that which he held among the living. The tribal chief becomes a paramount chief in the spirit world, the lesser chief holds sway in his lesser capacity, etc. We shall see that in intercession, when the tribe is threatened with calamities, it is the late paramount chief who is appealed to for help, and when one feudal chief is at war with another, the chief's dead predecessor will be called upon for aid. When a village is moved, it is from the spirit of the dead headman of the village that success in the enterprise is sought. Similarly, in family trouble, some dead ancestor is entreated to set things right, while a native 775

3:Summer D-5 (ex. 1912) 1922 FT7 Tao FT7

●775 setting out on a journey may ask the intercession of his deceased father to secure his safe conduct.

The spirits of the dead are in general said to dwell "above." They haunt the graveyard or visit the scenes of their life, and may be associated with natural objects or with certain animals, into which they are supposed to enter temporarily. Thus a dead man's spirit will visit the earth mound which marks the site of his old house in the village. The spirits of headmen are often thought to haunt the big trees of the village open space; such trees are held sacred for this reason. Some time ago in the old village of the chief, Malenya, a party of women cut down one of these trees for firewood, ignorant of its sacred character. With the crash of the falling tree, they became frightened, and one of the present Malenya's wives came upon the scene, predicting all kinds of evil to follow unless reparation were made to the insulted spirits of the dead chiefs. The remains of the tree lie there to this day, untouched except by natural decay.

To quote another example, near a bathing pool called *japwoli* (from *ku-japa*, to bathe, and *woli*, the initiates) where boys bathe after initiation, on the Domasi river, there is a small cataract whence a cloud of spray rises and a continued rumbling sound comes forth. Here, the old men say, you can hear the drumming of the spirits, while you may see pythons and the crowing cobra in whose bodies the spirits live.

As I have already mentioned, the spirit-world so far as the native has speculated on the problem is "above" in a semi-materialistic heaven. If questioned closely, the phrase "I do not know" will figure largely in his replies. He will not say there is any "marriage or giving in marriage." If a child dies, they often say, "So-and-so (some deceased person) wants a water-carrier." Indeed they often use a phrase under the circumstances identical with an English expression, "They are calling away the children."

Natives attribute to the spirits of the dead the power to partake of anything on this earth, such as food. They have no exact ideas with regard to animals and what happens to them when they die. They will not tell you that an animal has an *mzimu* but at the same
[825] time, a goat is often killed at a funeral, with the remark, "The goat will follow the dead man." The goat's meat will be eaten by those assisting at the funeral; hence there is the suggestion of the idea that animals' spirits do go to the spirit-world.

✓776 In referring to the spirit-world, the native generally uses the word *ku-mulungu*, and here we have the second element in their religious beliefs, namely a supreme being; *ku-mulungu* means at the place of or with *mulungu*, the supreme being. *Mulungu*, however,
[845] takes a very secondary place to the *mzimu*. He is referred to only in a general way. In answer to such questions as why has a woman an albino child born to her, she will say "*Mulungu* made it so"; in fact in reply to many questions to which the native has no answer, he will use practically our English phrase, "Oh, God knows!" and with about as much meaning.

To *Mulungu* is ascribed the sending of the rain, but apparently he has no part in giving good crops or causing a plentiful harvest, neither has he any direct interest in men's affairs,

[829] [778] be supposed to live in such trees. They are convenient natural objects for them to occupy, in fact practically the only ones to be found in villages. Trees may accordingly, therefore, be looked upon as in some degree sacred. Almost each tree stringe or phase of saliva may be placed as an offering to the spirits of the departed. But the Tao do not count little huts in their vicinity, hung about with strips of cotton as is the custom among the Anyanja.

[775] Macdonald[1] mentions the spirits in connection with Sudes and other hills round Blantyre and supposes them to be the spirits of the places themselves. This I think is unlikely; they would probably turn out to be spirits bearing the names of long departed Anyanja chiefs whom the immigrant Amangoche Tao venerated just "to be on the safe side," since they had come and taken the country which long ago belonged to the former tribe. When approaching or passing any spot held to be the dwelling place of spirits, salutation is made by clapping the hands.

Spirits of the departed may enter into animals or may take the form of animals, commonly lions and sometimes large snakes (python), but this belief is not as general among the Tao as among other tribes, in my opinion. An animal which is so possessed is called *Sayuka*, from *ku-ayuka*, "to be transformed."

[823] [774] Apart from this habitation of inanimate objects above mentioned by mains, there is nothing that points to a belief in Animism among the Tao, so far as I know. Neither hills, rocks, streams, lakes, nor trees have their own spirits, nor are they endowed by the native mind with life.

Deceased persons appear to the living in dreams, the native apparently believing that the deceased appears in his material body.

[775] [787] [791] They believe also in revelation of wishes of the deceased through the medium of the living. The spirit of the deceased is supposed to enter into the medium. The medium, I am informed, is always a woman, never a man. From the descriptions of some of these revelation séances, there can be no doubt that they are manifestations of *la grande hystérie*. The medium works herself up into a frenzy of excitement and in her delirium gives out the name of the deceased, the voice which speaks being that of the spirit within her. She rolls on the ground and foams at the mouth, uttering the word of revelation which is generally to the effect that some deceased chief's spirit is feeling aggrieved at the neglect of his tomb; the voice may go on to say that certain practices are forbidden, or demand that certain rites be observed by the people. The spirits which possess her are generally spoken of as *mawabe*, a word which, though sometimes used as equivalent to mains, usually seems to have rather a sinister significance. Insane persons are called *mawabe* and are thought to be possessed by a spirit, and vapor baths with excretion may be practised for their cure. In the case of the death of anyone who is possessed, in answer to my interrogation, I have been told that both the spirit which has entered into the man and his own mains leave his body.

[158] [761]

[1] Op. cit., vol. I, p. 70.

?: Hatherwick M-S (ca. 1900) 1902 FT? Tao FT?

witchcraft. On the appointed day she dances, *hapina* mounts, to dance the spirits, or *kamtanda*, to rave or prophesy, and in the ravings of the dance she calls out the name of some party who is afterwards accused of being the sorcerer or witch. Followed by a crowd of excited spectators she dances through the village spear in hand, stopping here and there to dig up charms or medicines which the supposed witch has buried in the ground as the instruments of his occult practices. It is only in cases of supposed special difficulty, or where the magnitude of the supposed crimes demands that special measures be adopted for their detection, that the services of such a witch detective are called in. In ordinary cases these appeals are made to the divining oracle who consults his "bone" as a means of discovering crimes of this nature. 754 [171]

Among the Tsaw the human being is believed to be the sole possessor of a *linda*. I have been unable to discover any trace of a theory that the *linda* may pass into any animal or inanimate object and there confer upon it the nature or power of a fetish. Such belief is cherished among the *Angoni* and *Achewa* tribes to the westward by *Nyasa* and the upper Shire River, and the intelligent Tsaw is aware of this, but he states that among his people no such belief exists. Even charms which have the effect of healing or warding off disease, or of protecting the wearer from war or wild beasts or other danger by land or water, are supposed to possess this power without any idea of their being possessed by a *linda* or other spirit influence. The nearest approach to such a theory is in the case of certain powerful "doctors" who have obtained special medicine by means of which, at death, they can transform themselves into lions, leopards, crocodiles, etc. Lepers also are sometimes supposed to become hippopotami. But both of these cases must be regarded rather as transmutations of body than transmigrations of soul. 774 [151] 756 775

It will be thus seen that the nature of the human *linda* is closely allied to that of the *mzimu*, which are the inspiring agents in medicine and in the century of prophecy or incantation. What the origin of these inspiring *mzimu* is, or to whom they belonged when in bodily life, the Tsaw holds no theory. He is content to accept them as they are, *mzimu* (*pepi*) "Just *mzimu* and nothing more," as he says. 774 [28]

It is, however, when we follow the disembodied *linda* after death and consider its position and power in the other world that we find ourselves in a region of higher spiritual activities. 775

In dreams or in fainting fits the *linda* leaves the body but only to return to it with the awakening consciousness. At death, however, it leaves its earthly abode never to return. It is now spoken of as having gone to *mzimaya* or *mlimaya*. This word, which lies at the basis of all Tsaw theories of the place of the soul after death, will be dealt with later on as regards its derivation and connections in the Bantu family of languages. In its actual use it bears two significations.

1. The word *mzimaya* is in the first instance applied to the human soul or *linda* after death when it is considered as an inhabitant of the spirit world. Even in life a man, when he meets with any piece of good luck, will be heard to say, "It's my *mzimaya*," as if his soul had an influence in determining the character of his

9: Hathorwick (M-5 (ca. 1900) 1981 FTT Tao FTT

present fortunes. But it is in the houses and after death, when it is considered as having an influence on the lives and fortunes of those it has left behind in the world and consequently as a power to be propitiated and honoured, that the term *wulungu* is more strictly applied. Freed from the body it passes to *wulungu*, and there is regarded as endowed with powers which it never possessed when alive on earth. To pray to such a spirit is described as *kulomba wulungu*, to worship *wulungu*, never finds in this case. Such *wulungu* worship enters largely into Tao religious or social life. In almost every Tao village there will be found a shrine which is the centre of the worship of the inhabitants. It consists of a carefully built hut enclosed within a strong green fence or hedge of a species of native plant. The hut itself is built of the usual native materials—the walls of wooden posts, bamboos, and strong reed grass bound together with bark rope and plastered over with clay or stiff mud. The roof is of grass laid on a framework of bamboos, and is generally covered with long strips of white or coloured calico. On the ridge or apex of the roof are fixed a couple of flags or an umbrella or two. One wall is usually left open so that the interior is easily seen. Within, from the bamboo rafters are suspended handkerchiefs, cloths, bunches of beads, etc., all offerings to the *wulungu* of the dead headman or chief from his friends and relatives. The floor is of clay carefully smoothed with mud in native fashion. A raised platform or mound of earth in the centre marks the spot where the grave was made. The *wulungu* or officials who preside at the funeral ceremonies, first dig for about 9 or 10 feet down in a perpendicular direction, and then on the western side of this well they hollowed out a shallow cave in the earth. In this the body was placed, laid on its side with the knees bent up under the chin, and the face turned towards the east. Various articles of personal property were next placed beside the corpse, clothes, ivory, guns, axes, hoes, etc., and the mouth of the cave closed up with wooden posts and a strong reed mat. The grave was then filled in and the surface carefully finished as we have seen. At the head of the mound a native pot was fixed in the ground for the reception of the offering of beer which is an almost ignorable accompaniment of any act of worship paid to the *wulungu* of the dead.

Such a shrine marks the grave of almost every Tao chief or headman, and is regarded as the abode of his soul or the spot where his *wulungu* is most accessible. If his successor is about to undertake a long journey or enter on any warlike expedition against an enemy or neighbour, he must first *kulopa* whisper, place an offering here to secure the favour and assistance of the *wulungu* of the dead. Should a long-continued drought endanger the prospects of the grain crop, the departed chief must be solicited to send the lacking rain. A feast is first prepared, almost always of beer, sometimes with the addition of native porridge, fowl, or goats. The worshippers gather round the shrine bringing part of the food which they have prepared. Their priest for the occasion is the successor of the dead chief, sometimes one or other of the *wulungu* who placed the body in the grave, or it may be that any other near relation of the dead man is chosen to represent the people and act as their spokesman. The nearer the relationship the more influence will he have with the dead.

Y: Hatherwick M-5 (ca. 1990) 1992 FT7 Yao FT7

778 Uhlenbeckiale, which may therefore be rendered as "The old, old One," or "The
777 great, great One." A like rendering may be given of the Yao term *mulungu*, the
"Old One," or the "Great One." In this or a modified form *mungu* (Swahili) it
782 appears in all the Eastern group of the Bantu tongues as the equivalent for "God"
(see Father Torrend's *Comparative Grammar of South African Bantu Languages*).
[94] To trace in as Father Torrend does to any connection with Moloch, the god of the
Phœnicians, is to attach undue weight to a chance coincidence of sounds.

As we have already seen, the word *mulungu* is applied to the human finite
when regarded as an object of worship, or as an inhabitant of the spirit world.
● 775 But it is also used to denote that spirit world in general, or more properly
776 speaking, the *aggregate of the spirits of all the dead*. The plural form of the word is
rarely heard, unless when the allusion is made to the souls in their individualities.
In its native use and form the word does not imply personality, for it does not
belong to the personal class of nouns. Etymologically it is cognate with the leg,
heart, arm, head, etc., of the human frame. Its form denotes rather a state or
property inhering in something, as the life or health inherent in the body. Among
the various tribes where the word is in use as we have described, the missionaries
have adopted it as the term for "God." But the untaught Yao refuses to assign
to it any idea of being or personality. It is to him more a quality or family of
the human entire whose signification has been extended so as to embrace the whole
spirit world. Once after I had endeavoured to impress an old Yao headman
with the personality of the Godhead in the Christian sense of the term, using
the term *Mulungu*, my listener began to talk of "Che Mulungu," "Mr. God,"
showing that originally to him the word conveyed no idea of the personality I was
ascribing to it.

And yet the Yao approaches closely to the idea of personality and a personal
776 being, when he speaks of what *mulungu* has done and is doing. It is *mulungu*
773 who made the world, and men, and animals. Far in the interior of the continent,
toward the north-west, beyond the plains and swamps of the Lengwe River and
Lake Bangweulu, there lies, in Yao legend, an island in the midst of a lake called
Kapititinya. On that island there is to be seen a large flat rock marked by the
footprints of men and animals of all kinds. When that rock was once a heap of
moist clay, *mulungu* created all living things and sent them across the soft mass,
where their footprints remained to be afterwards hardened into the impalpable rock.
Such is the Yao legend of the creation of the world, and *mulungu* is always
the Great Creator.

Mulungu is also regarded as the agent in anything mysterious. "It's
776 *mulungu*," is the Yao exclamation on being shown anything that is beyond the
range of his understanding. The rainbow is always "*mulungu*," although some
[95] Yaos have begun to use the Mang'anja term "*utu wa Lomo*," bow of Lomo.

Offerings are made to the spirit world or to *mulungu* as the great agency in
769 the affairs of human life. Outside the village, or beside the headman's hut, may
782 often be seen a rough shed. In this are placed the first-fruits of the new crop,

1: Tew . E-6 (no date) 1950 F77 Yao F77

Kangombe, used to persuade Nyanja to help in the matrilineal rite. When Kapeni in turn fled to Mount Soche from the Ngoni, and died there, the Yao addressed their offerings to him, not to Kangombe.[1] The word *Mulungu* has sometimes been interpreted to mean Supreme Being, God, Creator, but among the Yao it seems not to have a personal connotation. It was used to describe the agent in any mysterious event,[2] or the place where the ancestor spirits (*mazimbu*) were supposed to dwell. Daily life was full of acts of respect towards the ancestors, who were regarded as jealous of the living, and requiring constant propitiation.[3]

Sorcery

Accusations of witchcraft and measures for dealing with it play a dominant role in Yao social life. With certain exceptions nearly all diseases and deaths are thought to be caused by sorcery. The exceptional causes are: the hand of God, old age, the transgression of certain taboos, and battle wounds. If sorcery is suspected the relatives of the sick or dead man consult the diviner to identify the offender.

Yao (in common with the Mawri and many peoples of Central Africa) believe that sorcerers have a craving for human flesh, which they satisfy by killing with magic the victims of their malice and hatred. They acquire their magical powers by an apprenticeship, which might include incestuous relations with mother, sister, or mother-in-law, or sleeping on the grave of the mother for one night. The sorcerer then learns the medicines and finally demonstrates his power by killing a young relative by magic; he waits till the victim is buried, and then magically exhumes him for the secret feast with his fellow sorcerers. Each sorcerer who shares the flesh owes a debt to the one who secured the victim.

Charms are used as preventive measures against sorcery. When a diviner has diagnosed the cause of death as sorcery, retaliatory measures are taken. The headman of the village could either call in the witchfinder to identify the offender or he could call in the diviner to take action against all the sorcerers in the village. After the diviner, *Mahindile*, had revealed the guilty ones, they were challenged to take the poison ordeal to prove their innocence. If they died, the proof and the punishment were simultaneously accomplished. If they survived, the diviner was held to have been at fault and they were acquitted. The witch doctor was supposed to entice sorcerers to the graveside, and slay them with magic more powerful than their own.

The diviner's findings are to-day checked by the poison ordeal administered to a chicken. A sorcerer detected in this way might be asked to provide medicine for the man whose sickness he had caused, or after a death he might be compelled to pay compensation. If the accused is a village headman, he will not be summoned before a chief, but his brother will take the villagers away from the sphere of his influence, or he may be chased away from the district. Accusations of sorcery follow certain regular lines. Nearly all accusations fall on relatives. Diviners are consulted by matrilineal relatives of the sick or dead person, and the man most usually accused is the brother of the accuser, or the husband of his sister. Witchcraft is therefore a manner of expressing the hostilities latent in these relations, which are, in the Yao social system, full of tension.

[1] Macdonald, 1882, vol. i, p. 70.
[2] Hetherwick, 3, 1900.
[3] Hoch, 1933, pp. 14-15; Macdonald, 1882, vol. i, pp. 58-73, 204-13.

THE WATAO OF FYAMLAND

III

48. A child, when one of its milk teeth drops out, stands some five yards away facing the door of the hut and throws the tooth over the roof of the hut, saying:

"*Ai khonpale* [illegible] *ghyo* [illegible] *ghyo* [illegible] *ghyo* [illegible] *ghyo*"
"Old one take your tooth, give me my of good one!"

Religion. The matter of the religious beliefs professed by natives of East Central Africa is one beset with many difficulties to the student of today. It has been the subject of many essays by workers in the missionary field, but the wide contact of the natives of Fyamland with missionary effort during the past thirty years has done much to resolve the problem, and one finds that many missionaries in their writings rather solve the picture with their own feelings.

I think probably the Tao with whom I am now concerned have a truer conception of their own beliefs than many of the subject tribes among whom mission teaching has more easily taken root. The religious beliefs of a people are to a large extent the reflection of the circumstances under which that people lives. The outstanding event to all natives is death. At death, something is lost to the body, without which life is impossible. This is the *mzimu* which may be translated "soul" or "spirit." The *mzimu* is said to leave the body of the dying man when he becomes moribund or unconscious. It appears that the same *mzimu* may leave the body during unconscious states unconnected with death, as when a man faints, in epilepsy, and during sleep.

Apart from this evidence of the dissociation of the *mzimu* from the living body, the Tao believe that a man's shadow is an objective manifestation of the soul and they will say "the shadow is the *mzimu*." Fear is experienced if a man jumps on the shadow of his fellow. Light is also thrown on the constitution of the *mzimu* by the belief in a certain evil-spirit which dwells in deep pools. It is called *shimala-mzuri*, which means "one who may finish (drink up) all the water." The superstition regarding this evil spirit is that it can suck the blood from your shadow as you stand at the edge of the pool, till you become so weak that you fall in and are drowned.

After leaving the body at death, the *mzimu* goes to take up its place in the spirit-world, occupying a position corresponding to that held by the man during his life. With a truly unintelligible assumption, the soul is supposed to have all the attributes of the dead man, to be wealthy in proportion as the man was so on earth, and its relative position will be identical with that which he held among the living. The tribal chief becomes a permanent chief in the spirit world, the lesser chief holds sway in his lesser capacity, etc. We shall see that in intercession, when the tribe is threatened with calamities, it is the late paramount chief who is appealed to for help, and when one feudal chief is at war with another, the chief's dead predecessor will be called upon for aid. When a village is moved, it is from the spirit of the dead headman of the village that success in the enterprise is sought. Similarly, in family trouble, some dead ancestor is entreated to set things right, while a native

[illegible] setting out on a journey may ask the intercession of his deceased father to assure his safe conduct.

The spirits of the dead are in general said to dwell "above." They haunt the graveyard or visit the scenes of their life, and may be associated with natural objects or with certain animals, into which they are supposed to enter temporarily. Thus a dead man's spirit will visit the earth mound which marks the site of his old house in the village. The spirits of headmen are often thought to haunt the big trees of the village open space; such trees are held sacred for this reason. Some time ago in the old village of the chief, Mulonya, a party of women cut down one of these trees for firewood, ignorant of its sacred character. With the crash of the falling tree, they became frightened, and one of the present Mulonya's wives came upon the scene, predicting all kinds of evil to follow unless expiatory rites were made to the insulted spirits of the dead chiefs. The remains of the tree lie there to this day, untouched except by natural decay.

To quote another example, near a bathing pool called *japondi* (from *ba-japa*, to bathe, and *vuli*, the initiation) where boys bathe after initiation, on the Dzonzi river, there is a small cataract whence a cloud of spray rises and a continued rumbling sound issues forth. Here, the old men say, you can hear the drumming of the spirits, while you may see pythons and the crowing cobra in whose bodies the spirits live.

As I have already mentioned, the spirit-world so far as the native has speculated on the problem is "above" in a semi-materialistic heaven. If questioned closely, the phrase "I do not know" will figure largely in his replies. He will not say there is any "marriage or giving in marriage." If a child dies, they often say, "*Ba-ambo* (some deceased person) wants a water-carrier." Indeed they often use a phrase under the circumstances identical with an English expression, "They are calling away the children."

Natives attribute to the spirits of the dead the power to partake of anything on this earth, such as food. They have no exact ideas with regard to animals and what happens to them when they die. They will not tell you that an animal has an anima but at the same time, a goat is often killed at a funeral, with the remark, "The goat will follow the dead man." The goat's meat will be eaten by those assisting at the funeral; hence there is the suggestion of the idea that animals' spirits do go to the spirit-world.

In referring to the spirit-world, the native generally uses the word *ba-mulungu*, and here we have the second element in their religious beliefs, namely a supreme being; *ba-mulungu* means at the place of or with *mulungu*, the supreme being. *M'ulungu*, however, takes a very secondary place to the mulungu. He is referred to only in a general way. In answer to such questions as why has a woman an albino child born to her, she will say "*M'ulungu* made it so"; in fact in reply to many questions to which the native has no answer, he will use practically our English phrase, "Oh, God knows!" and with about as much meaning.

To *M'ulungu* is ascribed the sending of the rain, but apparently he has no part in giving good crops or causing a plentiful harvest, neither has he any direct interest in man's affairs,

see in he "God the creator," of man or earth. He, however, receives the spirits of the dead. Should he refuse to do so, a man continues to live. When a child has recovered from some commonly fatal disease, the natives say, "*Mkungu wakenda* (refused him)!" or if he has been very near to death and then recovers, they say "*Mkungu wamenda* (spat him out)".

It would thus appear that among the spirit beats there is a regular law of precedence, and presiding over all is a supreme being, but all this is so remote as to have little importance for the living. The supreme conveying *Mkungu*, I must admit, has given rise to some doubt in my own mind as to how far he was a deity with an entity of his own in their religion at a little time ago.

Ancestors tend to be forgotten in proportion to the length of time which has elapsed since their death, unless they played some important part during their lives: then some particular one may be remembered to the exclusion of others, and to him prayers of intercession are offered. In the case of chiefs, the memory of a long line of rulers may be remembered on occasions when all else about them has fallen into oblivion. It seems possible originally *Mkungu* was the oldest ancestral chief who was raised up as a supreme being but who, in the process, has lost all other attributes. On the other hand, the word often refers only to the place where the spirits dwell; this may have been the original meaning.

There is no religious worship in the proper sense of the term but only propitiation, prayer for intercession, and return of thanks for favors granted. The keystone of this ancestor worship, the sum total of their religion to the exclusion of the belief in a supreme being, is fear. We have seen at the funeral that everything is done to lay the spirit at rest. The people wish never to hear of the spirit again. It is chiefly with a view of averting some evil that worship takes place or with a view of repairing some crime that sacrifice is made or to alleviate some suffering that communication is sought with the spirits. It is a question of, "Do us no harm, do not vent your wrath upon us for what we have left undone," rather than "Keep us from doing evil, save us from being our own enemies." It would appear to be a religion of spite, not of love and kindness, though there are glimmerings of a search after "a bond to guide and protect," as in the prayer given below and also in the action taken when removing a village.

As a corollary of this system of ancestor worship, there is no real priesthood. A man asks for favors for himself; the head of a family petitions a deceased father or some more remote ancestor of greater importance; the headman intercedes on behalf of the village with the spirit of a predecessor; a chief takes the place of high priest on the occasion of a tribal supplication to a former ruler, though he may be replaced by some one of his wives who acts as intermediary.

Some form of sacrifice is offered with the prayer, and often some omen is sought as a sign that the prayer is granted. For this purpose, flour made from millet called *mkopani* (*mawele*, Chin.) is commonly used. The word *mkopani* probably includes any sacrificial offerings.

[illegible] never have any food outside at night, not even the shell from the grain she has been pounding, but these most valuable of beings be attracted by it.

[illegible] Chinese is a word common to several tribes and among them appears to have various shades of meaning. Among the Wayao, the term are "the little people" of the lagoodoom order. They rob the gardens and cause not among the pumpkins; their little footprints can be seen, where they have passed hither and thither; fruits and vegetables that they touch will become bitter. To prevent these disasters, the Yao, at the time when their crops are ripening, place different kinds of vegetables at cross-roads, hoping thereby to satisfy the Ziwa and prevent them coming into the gardens. As far as I am aware, the Ziwa have nothing to do with fanlee and are in no way connected with *Mlungu*, to be mentioned below, as Mawkendi believed.[1] The chinwa is variously said to be "like a man but rather like an animal." He has two legs but goes on all fours.

The Yao describe another legendary race of "little people" who used to live in this country and who may still be met with, — "who knows?" They were of a very small stature, gave long beards, were very wealthy, quarrelsome, and fierce, and carried spears. When anybody met one, he was immediately asked: "*Mwenkwale Jumpi?*", "From how far did you see me?" and it was always well to pretend to have seen the little man coming a long way off and make him believe he was considered quite a big person; if you said "Hello, I have only just spotted you!", he would immediately spear you. They are commonly supposed to dwell on the tops of high mountains and are iron workers. They are called the *Mwenkwale Jumpi*.

[illegible] There is no relation so far as I know between these two classes of "little people," but I think these stories go to upset the theory recently advanced by Hastings Gulliard in his Hunterian Lectures (1914) that folk-lore fables of bakgalidzes, etc., have a basis in fact. He believes that dwarf races at one time were to be found, possibly over a very wide area of the globe. In this country, I think it may be that we see the transition from historical facts to true fairy stories.

[illegible] The Anyanja have the same legend about these "little people," the *mwandi mwandi* ("where-did-you-see-me"); it is indeed not only wide-spread throughout this country, (the Alunga and Ambonda in North Nyasa district speak of the *mwandimwandu* who ask the same question), but there is a very similar legend among the Akikuyu in British East Africa.[2]

The *chinwa* is doubtless the *chiwani* of the Anyanja, mentioned in Scott's dictionary,[3] as Miss Werner[4] has suggested, for one finds that among the Anyanja at the southern end of the Peninsula, the *chinwa* is described as having only one side to his body so that he is invisible when viewed from the off side, thus resembling the *chiwani* who has one half of his body made of wax.

[1] Op. cit., vol. 1, p. 11. [2] H. W. H. Beech, 'Two Years' campaign of East Africa,' (Mac, London, 1914, p. 40-41).
[3] Op. cit., p. 50. [4] British Central Africa, op. cit., p. 20.

S:Swanson D-5 Ion. 1951] 1952 FTT Tao FTT

Lusuto Mtengo is the prophet of Isoma, a man of great height who walks the round of the country, stepping from hill-top to hill-top along "the fairy way," the "*Mlire wa Lusuto Mtengo*," which is supposed to run right around Nyasaland and never to cross a river, starting and ending somewhere near the junction of the Shiré with the Zambezi river. As he goes, he can be seen from a hundred miles away. He carries the *Isimbo* instrument and plays as he walks, singing:

"*Ndiwe* *mwe* *Amapapo* *Amlopo mwe* *wamudzo wamudzo ndiwe*"
"You my son (in trouble) with the midget Amadzoo I must call up the wasps, this season of famine!"

which might be rendered, "You people grumble about small troubles, so I will teach you to know better by inflicting great ones." When he is seen, there will be famine.

It will be convenient here to allude briefly to some of the beliefs connected with meteorological phenomena, as some of them have a bearing on native religious beliefs. The remarks made under this heading for the *Anyanja* hold good for the Yao. The morning and evening stars are called *Nyamulaka* and *Nyamupalanga*, the good cook and the bad cook. They are looked upon as the two wives of the moon, one of whom feeds him so well that he grows fat, the other who does not, so he wastes away. The constellation of the Pleiades is called *Jimsiku*; the Milky Way, *Lubingo wadza*, "the watcher of the night," when high in the heavens, dawn is near. When shooting stars are seen, natives exclaim "*mwapie mdwajo!*" *Mwapie* is a sweep-pointed arrow. Eclipses are recognized but no explanation is vouchsafed. Thunder is supposed to be the noise of rain falling in the heavens before it reaches the earth. The rain is sometimes supposed to be the condensing steam from an enormous pot of water boiling over a furnace fire in heaven. The lightning is conceived as a lizard-like animal which dwells in the clouds and darts out from behind them and comes to earth and breaks up trees and may kill a man. Mire is supposed by the Yao to be its movement. The animal is called *Njoai*, and is the same as *Mpamba* of the Ashipeta who consider the rainbow to be the broken egg-shell of the lightning dragons' eggs. There is a large red compound lily, a species of *Haemanthus* also called *Njoai*, which is in some way connected with the lightning. No Yao child would ever touch this flower. Children are always advised never to seek shelter under a big tree but always to make for a bamboo thicket, for if the lightning strikes the bamboo and splits it, it will get caught inside the hollow stem.

Gales of wind are said to emanate from a plant called *Chanpale*. It is described as having one prongs like an elephant's trunk and others like two fingers. It is found on the tops of very high mountains, growing alone and surrounded by bare rock. This plant is used by medicine men to gain supernatural powers. *Chanpale* is also the name of a parasitic plant on the charcoal trees in Nyasaland.

The world is taken by the natives as they find it; to them no explanation for its being is necessary. So far as I can find out, there is no idea among the Yao of a Creator. The

[illegible] origin of mankind is explained in a story given elsewhere; *Mulungu* takes no part, nor is the supernatural even invoked in explanation.

The religion of the Tso may then be summed up as somewhat vaguely phrased, ill-defined, monotheistic belief in a supreme being. Their religion is not animistic. There are certain spirits of evil, demons, fairies and supernatural beings and animals which, however, do not play any real part in their religious beliefs.

Native Sayings. Natives are very fond of sayings, many of which are of the same nature as our own proverbs. The meaning of many of them is, however, not always self-evident but depends on some little story with a moral.

The following are some of those which I have collected among the Tso near Sesheke:

1. *Akwanda kkandalala!* (or *kpalala*)
   He caught a fish, (a mouse!)

An expression meaning "He slipped down." The variations being used when wet or when dry under foot.

2. *Uwenda ubi ni'mwa!*
   Coming is in the eye (evident).

An expression meaning "Look out; some one is after us!"

   Kalala shangwa!
   Rabbit is shown!

This is a Mang'anja equivalent to the above.

3. *Chenyepilowa mwakkkkkala wanyanda!*
   A thing that did not know they cooked in among the herbs!

An insect which had not listened to advice about the dangers of sitting on herbs used as vegetables, was gathered up by a woman and cooked with them.
An expression used with the sense "If you do not take advice and anything happens to you, it will be your own fault."

4. *Mlala ubi ni'wapikwala!*
   Medicine is in the nest!

Meaning "You are forewarned; it is your own look out!"

5. *Kwapikwanda wandachala ukkkkkkwa!*
   Mr Would-Be-Clever they left with the shell!

Ku-kalanda, to be clever (to show off); an expression made to a newcomer who unbidden joins in a discussion. It has reference to the following story and means that anyone joining a party unbidden may find himself in an awkward situation. Some strangers came to a village, and after being given food and quarters, all retired for the night. One of them, however, Mr. Would-Be-Clever, hearing something going on outside crept out of the house to find out what was happening. Seeing some people playing at catch-ball, he

T: Hetherwick M-S (ca. 1900) 1932 FT7 Tao FT7

with the dead. He approaches the shrine, opens the gate of the fence, takes a 769
pinch of beer and pours it into the pot on the head of the grave. Next he places
the basket of porridge and the plate of meat on the second basin in and retires.
Kneeling down outside the gate facing the shrine and a few yards in front of the
people he chants his prayer in a monotone, each petition commencing with "Chonde,
chonde," "Please, please." All the while the people clap their hands in unison
with him and sing the responses as they do in a native case in the chief's court.

When the offering has been made at the grave, the rest of the beer or other
food is consumed by the worshippers. Grass are fired as a token of respect to the
dead, and the rest of the day is spent in dancing. [639]

Such shrines are to be seen in almost every Tao village where the inhabitants
have been located for any length of time. They are regarded with awe—the little 778
boys as they pass whisper to each other in a warning tone, "nsondo." Should the 769
village be moved to any other district, the old shrine is not forgotten. Periodical
visits are made to it with the usual offerings. In cases where the old house has
been occupied by a people hostile to the old inhabitants, such visits are usually
made during the night, and the people awake in the morning to feel that the old
chief's grave in their midst has been newly repaired, and a fresh offering of food
placed on its head.

Sometimes such shrines are found on the summits of hills which some way
have been a refuge from the enemy in times of war, but which now lie bare and
deserted. Thither in their need the people make their way with their offering of
food and beer, and their prayer for rain or suitable weather for the crops. Near
Phwetyre such shrines are to be seen on the tops of Mount Sochi and Mount
Mishiro. The former is the abode of the spirit of Kankhwaka, and the latter of
Mpulule, both old Mawri or Mang'anja chiefs who doubtless fled there seeking
safety from the war of the invading Tao, and died leaving their wounds to be the
nsonsopo or spirit of the mountain. Some years ago, during the fear of an Angoni
invasion, the Tao of Mount Sochi fled to the hill-top for refuge, and there the
old chief Kapasi died. He was buried close to the grave of the old Kankhwaka,
and now, when the Tao on Sochi make an offering, it is to the spirit of Kapasi
that the homage is paid, and the shrine of Kankhwaka lies neglected.

Only the graves of chiefs or headmen are thus treated as shrines of worship. 554
The burying place of slaves and the common people lies away in the thick bush, 769
where only the rank grass or the thicket of old trees marks the spot. No offerings 769
are ever taken there, for such as are buried there can have no influence in the 778
spirit world. The dead are buried, the broken pot or basket is left on the grave to
mark the spot, and none ever seek to go there save to lay another in the same
neglected ground.

II. But the word nsonsopo is used by the Tao with a wider application. 776
Etymologically the word is connected with the root *kulwapwa*, which in so many 197
of the other branches of the Bantu tongue appears as *kulu* or *kuru*, and signifies 192
"great" or "old." It is the same root which appears in the Kafir word for God,

778 Unkulunkulu, which may therefore be rendered as "The old, old One," or "The
777 great, great One." A like rendering may be given of the Ewe term mawuga, the
782 "Old One," or the "Great One." In this or a modified form mawuga (Dwalin) is
[104] apparent in all the Eastern group of the Bantu tongues as the equivalent for "God" (see Father Torrend's *Comparative Grammar of South African Bantu Languages*). To trace it as Father Torrend does to any connection with Moloch, the god of the Phoenicians, is to attach undue weight to a chance coincidence of sounds.

195 As we have already seen, the word mawuga is applied to the human dead
779 when regarded as an object of worship, or as an inhabitant of the spirit world.
778 But it is also used to denote that spirit world in general, or more properly speaking, the aggregate of the spirits of all the dead. The plural form of the word is rarely heard, unless when the allusion is made to the souls in their individualities. In its native use and form the word does not imply personality, for it does not belong to the personal class of nouns. Etymologically it is cognate with the leg, heart, arm, head, etc., of the human frame. In form denotes rather a state or property inherent in something, as the life or health inherent in the body. Among the various tribes where the word is in use as we have described, the missionaries have adopted it as the term for "God." But the untaught Ewe refuses to assign to it any idea of being or personality. It is to him more a quality or family of the human nature whose signification he has extended so as to embrace the whole spirit world. Once after I had endeavoured to impress an old Ewe heathen with the personality of the Godhead in the Christian sense of the term, using the term *Mawuga*, my listener began to talk of "Our Mawuga," "Mr. God," showing that originally to him the word conveyed no idea of the personality I was ascribing to it.

776 And yet the Ewe approaches closely to the idea of personality and a personal
773 being, when he speaks of what mawuga has done and is doing. It is mawuga who made the world, and man, and animals. Far in the interior of the continent, toward the north-west, beyond the plains and swamps of the Lungwa River and Lake Bangwelu, there lies, in Ewe legend, an island in the midst of a lake called Kapitilonya. On that island there is to be seen a large flat rock marked by the footprints of men and animals of all kinds. When that rock was once a lump of moist clay, mawuga created all living things and sent them across the salt water, where their footprints remained to be afterwards hardened into the impressible rock. Such is the Ewe legend of the creation of the world, and mawuga is always the Great Creator.

776 *Mawuga* is also regarded as the agent in anything mysterious. "It's
[107] *mawuga*," is the Ewe exclamation on being shown anything that is beyond the range of his understanding. The rainbow is always "mawuga," although some Ewes have begun to use the Mang'anja term "nin wa Lawa," bow of Lawa.

769 Offerings are made to the spirit world or to mawuga as the great agency in
782 the affairs of human life. Outside the village, or beside the heathen's hut, may often be seen a rough shed. In this are placed the first-fruits of the new crop,

777

777 LUCK AND CHANCE--concept of good and bad luck; ideas about chance and probability; things associated with good or bad luck (e.g., lucky objects, luck-bringing formulas, lucky and unlucky numbers, propitious and unlucky days); techniques for controlling luck (e.g., wearing of luck amulets, reciting of lucky formulas); conception of fate, etc. See also:

Seasons	448	Divination	97
Gambling	649	Person numbers	301
Parapsychic studies	701	Calendar	68
Theory of accidental injuries	766	Scientific theory of chance	613

9-Pamma B-6 (ca. 1910) 1952 FT7 Tan FT7

[91] [573] [574] as he climbs a tree with his back to the trunk; at the top he hangs by his legs and looks down on the crowd, his assistants doing the same. Coming down he runs to his hut; throwing his "tail" into the air and catching it again, he enters.

This is about nine a.m.; all cast till about eleven o'clock, the cast somewhile eating food cooked by their mothers in the shelters. About eleven o'clock, the n'wéléléle takes a big gourd and putting his "tails" into it covered with a white cloth, gives it to his assistant who carries it on his head and follows him to a pool of water, accompanied by all the women except any young men who have not borne children. He invites them to go "crab-hunting."

At the pool he enters the water with his assistants round him, except the assistant with the gourd, who stands on the bank. The n'wéléléle makes movements as of hunting for crabs in the water singing:

"Chwanyande ngwéli ngwéli nwanyi nwanyi"
"There must be hunting otherwise I should have had to eat porridge my without relish!"

He pretends to catch a crab and his hands are immediately grasped by his assistants in the water who all help him to convey it to the gourd as the "tail" is taken out of it.

[91] The crowd then returns to *Lepanda* to enact the *nambunde* ceremony. *Nambunde* is a representation of an animal made of bark on a frame-work covered with cloth and painted with flour in spiral markings, hence the name (*nbunde* is a part of a spiral shell from the Zambezi coast much prized by natives as an ornament). The animal is really the cattle antelope with horns and the n'wéléléle's "tails" in place; there is a man inside it. It is made perhaps a mile away and then brought near to *Lepanda* and placed in a cleared area.

The n'wéléléle on his return from crab-hunting has gone into his hut and put on his full regalia; then, accompanied by his drummers, he comes out and is immediately followed by the cast and the rest of the crowd; knowing where the *nambunde* will be put, he leads the people in the opposite direction calling out to them to look out for the antelope. They, of course, all look in the wrong direction, so when he knows *nambunde* is in place, he wheels round and stops. "There is the animal!"

In the old days the chief was present for this, a platform being built for him. When the *nambunde* appeared, he gave his hunters much powder (no bullets) and they shot at the animal. The animal would fall as if hit and the n'wéléléle would approach to claim it as his beast, but it would promptly get up and charge, to be driven off by the crowd, whereupon it would run away into the bush.

Lots are then cast by the n'wéléléle, using a tortoise shell stuffed with medicine. The cast all stand in a circle with their mothers behind them, while the n'wéléléle goes to the leader and throws the tortoise at the boy's chest. If it sticks there, all is well and he pretends to rub boy. Should the shell not stick on the boy's chest, it portends ill-luck to that individual and he has to be dealt with further. The n'wéléléle, holding his "tail," and his assistant holding a horn of medicine, stand back to back, with the boy between

[77]

[56] While the wali then march solemnly along shaking their wands, the assistants begin singing:

"Ee village assistant"
"To the gate they have shot"

[57] [58] to which the wali reply:

"Kanwa kwalagalia"
"There is no place where to pass"

The w'wisbile remains at Lepunda till everyone else has left; he then sets fire to the shelters and leaving without looking back, runs to overtake the procession and then leads it on towards the village still at a slow pace, while all around is a yelling crowd of delighted mothers and other relatives and the assistants and drummers, all singing and shouting.

When the outskirts of the village are reached, the w'wisbile halts and waits for the chief to come out and give them permission to enter. The chief brings cotton which unrolled on the ground measures the length of the procession of wali. Headed now by their leader, the wali walk over this cotton, while the assistants roll it up behind them for the w'wisbile, as it is part of his payment. Flour may be brought him at the same time, carried by the chief's wives.

At an Uyaya I witnessed at Kwimbanwa's, the hall was called on the bank of a stream at the edge of the village where a bamboo arch had been erected. The arrival of Chief Malenya at this point with cotton and flour was the sign for a demonstration by his young men who ran forward as if in battle, firing off blank rounds from old Tower muskets and executing a kind of war dance.

After the cotton has been handed over, the chief returns to his kraal and the procession continues into the village, across the village open space to the house round the chief's house. Then, the wali enter by a gateway and disperse over the courtyard where they find [71] their sleeping-mats laid out ready for them by their mothers. The w'wisbile lays his "tail" on the leader's mat to bring good luck thereafter. With Mbunda, there is no further part for the wali, but in some cases they are called upon by the chief to give an exhibition of their dancing and drumming. The wali sleep that night in the kraal and disperse the following day.

In the morning, the w'wisbile takes his "tail" and a stirring stick made from a millet stalk with the roots on it, and strikes the ground at points in a row in front of the chief's [72] house. Here the pots of beer which have been prepared are placed in rows, those chosen by the chief and those chosen by the w'wisbile, and drinking commences. The w'wisbile, before he joins in, takes the wali to an ash-heap in the village and there sprinkles them with medicine from a grain-mortar after which they go with their shamwari behind a house and [73] change into new clothes. They then go and salute the chief by clapping their hands and depart to their villages, duly initiated and somewhat subdued by what they have been through. Their new names as "men," may be given them by the shamwari either at Lepunda [55] or after the return to the village.

3:Stannus D-5 (ca. 1912) 1922 FT7 Yao FT7

Tingalinga was another well-known performer; he used to do the same tricks as Kambanja. He also was possessed of an elastic skin and is said to have been able "to tie his ears together behind the back of his head." 789 791

Mpechetula, a Yao of Mkanda, is a man with considerable renown. He is said to be able to produce a lion at will from a lion's tail and claw. He would offer to show this if there were any brave enough to go through with it. On a moonlight night, he would expose on the ground in a cleared space near a village the tail of a lion held cross-wise in a piece of split bamboo. At the split end of the bamboo, he would place a lion's claw and round this, a woman's belt held in position by three bamboo pegs, around which he would draw a circle of *mbepusi* flour. Everyone would then withdraw to a hut in which the séance was to take place. After an hour or so, Mpechetula would send some one out to inspect the lion's tail where probably all would be found intact. He might then pretend to be uninterested and sleepy and suggest that some one should go out again in half an hour. Sooner or later, a man would come back, having found the tail gone; then everyone would go out to see what had happened. The pegs would be found in place but the tail and claw gone. A little way off, the split piece of bamboo would be found and further still a bead or two from the woman's belt. These, Mpechetula would pick up, and leaving a little trail of flour on their way, all returned to the hut, while he whistled as if calling some one. Suddenly they would be aroused by the sound as of a lion brushing against the hut walls, as the beasts are known to do, and next, a loud roar. Mpechetula would immediately open the door half-way so that the people could look out into the moonlight and there, a little way off, would be the lion. It would immediately advance towards the house and then, as it prepared to spring for the door, Mpechetula would offer it some of the flour in his left hand, armed with a stirring-stick, *mtiko*, in his right hand. As the lion landed, he would strike it on the head with the stick and lo and behold! the lion would vanish and the tail and claw would be found in his hand.

Superstitions. Scattered throughout these notes, particularly under *Usewi* and *Disease*, mention is made of practices which show a strong belief in superstition. Below are given a number of minor beliefs, and it is interesting to compare them with many well-known superstitions in other parts of the world. 771 784

1. A child who cuts the upper incisor teeth first will be unlucky. Such children used to be killed by the Yao. (Other tribes make medicine against the threatened ill-luck.) [777] ●

2. A woman with polydactylism may not take food out of a corn-store. Otherwise the stock of corn will not last long. (Rudimentary sixth fingers are not uncommon.) [732]

3. An insect called *chiopesa nusi* which lives in the mud at the bottom of pools, if killed causes the water to dry up. [823]

4. If a boy puts a water-spider in the armpit when learning to swim, he will learn quickly.

5. A man wishing to prevent rain falling on a day he is making a journey, will wrap some of the leaves of the *mtowesi* tree in his loin cloth and go without drinking. [824]

3:Stanzus D-5 (ca. 1912) 1922 FT7 Yao FT7

19. That portion of the gut of animals having folds of mucus membrane inside, may be eaten only by old people past the child-propagating age. If a young woman should eat it, she would have difficulty in labor. 771 784 [862]

20. It is believed that people who eat too freely of a little fish like whitebait called *mutumbu* get obstruction of the bowel by the wedging together of the bones. The treatment adopted is to pass up the rectum a smooth stick with a pad of rag at the end. This cannot be done by the person himself and so the aid of another has to be called in; only an intimacy, such as the relationship of brother-in-law gives, will warrant this service being asked.

21. The Yao believe that there is a little insect which lives in the ear, called *chiyeme lipilewile*, which tells the person what is said to him, the wax in the ear being its excrement. The pupil is called *mwanache jwa lisu*, the child of the eye. [825]

22. Among women, the uterus is called *nawaso* (*maso* = eyes); it is supposed to be a little person who holds the foetus. When the child is born, *nawaso* cannot find it and starts looking about, the movements causing the afterpains.

23. A man making his first journey to the coast used to sprinkle himself with water from every stream he crossed to give him a safe journey. In the same way, women at the present day going between Zomba and Blantyre sprinkle their babies with water from each stream. [484]

24. An ant-like insect called *ndupetumbe* (*tumbutumbu*, Chin.) [*dasylabris maphistis*] is lucky. On seeing it a native pats its belly and then rubs his own, wishing for plenty of food that day. If he is embarking on a journey or beginning some enterprise, he will wrap one of these insects in a fold of his loin cloth and take it with him for luck. [825]

25. When a native hears the *mwaipe* bird call (its call is like the mew of a cat), if he wants something, he immediately says, "Oh *mwaipe*, I want so-and-so. Be quiet and I will then be quiet, too!" If the bird ceases calling, he knows the wish will be granted. The female bird is said to be the more certain prophet.

26. The snake, *nahlukuti*, which lives in trees and is of a buff clay color with green markings, is said by natives to pierce the chest and tie a knot in itself on each side so that it can only be withdrawn by cutting off one knot. When the snake is thus withdrawn, its blood mixes with that of the man and he will die.

27. Natives have a habit of marking the spot where any event takes place by a stone by the side of the path, and every passer-by will add a stone for luck. In this way some large piles of stones have been made. [777]

28. A man resting on his way home from a long journey places a stone in the fork between the branches of a nearby tree, so that on his arrival he may find his wife has put by some food for him and has not used up the day's stock of flour.

29. A chameleon found digging in the path is said to presage the death of the finder's nearest relative. [787]

3: Stanzus D-5 (ca. 1912) 1922 FT7 Yao FT7

262 no one will touch. With the exception of carrion birds such as the crow and the hawk, most birds are considered fit to eat. The hornbill is not eaten, as it is supposed to carry part
[825] of a corpse on its nose.[1] Fowls form a regular article of diet, but some taboos in this connection are mentioned elsewhere.

Eggs are eaten only by children and old people; that is, by those outside the child propagating age. Milk is never consumed in any form. They say, "What a disgusting habit, to suck the juice of an animal while it is still alive!"

[843] Pregnant women will not eat certain things lest the child be born with some deformity, such as the snout of a pig, or the white stripes of a zebra.

539 Art and decoration. Sculpture can hardly be said to be an art known to the Yao. The only piece of stone work I have ever seen was a granite boulder, on the surface of which cup-holes had been made for the game of *Bao* (Pl. IV, fig. 4).

Of late years, individuals here and there have begun carving wooden figures of men and animals. The Yao, of course, make no idols. It is uncertain exactly how long it is since any of these people started producing wooden figures. I should think that this art has sprung up within the past twelve or thirteen years, that is to say, since there has been a market for them among European residents. In the first place only natives and some of the common animals, the eland and leopard, were represented; since then, many animals and Europeans have been copied. The native is extraordinarily clever in reproducing characteristic features in dress, etc., so that a Portuguese is easily distinguished from an Englishman. The little models in ivory of animals and native household objects, made by the Swahili people on Lake Nyasa, have never been copied by the Yao. Neither do they make clay images of men and cattle as do the Zulu-descended Angoni and cattle-keeping Wankonde. No native would allow any wooden figure to remain in his house for
[777] fear of ill luck; the women especially would look askance at them, fearing some misfortune in their next pregnancy. Little wooden figures of birds, however, are sometimes seen affixed to the point of the hut roof.

[177] The making of carved figures, then, is of recent introduction, or rather is a recent event in the evolution of the Yao, as they were not taught but self-inspired in the work.

The ability to make representations of objects by drawing appears in the same way to originate spontaneously here and there as a sport. Natives with a talent for drawing are found among all the tribes, and among the Yao, it is said, there have always been some who have been able to draw. Naturally enough, their reproductions are made on the walls of their houses, and their subjects are generally animals of the forest, sometimes men and houses, or some other object of particular interest[2] (Pl. VIII, fig. 1). I also give sketches of some other drawings I have noted (Pl. XVIII); the line figure of a man at Makanjila's

[1] Vide supra, p. 337.

[2] Cf. A. Werner, 'A Native Painting from Nyasaland,' Geog. Abs. Soc., London 1903, vol. 3, no. 30, p. 199-202.

3: Stanner D-5 (ca. 1912) 1922 FT7 Yao FT7

or after the return to the village. The boys often wear all their beadwork and new cloth for several days; after carrying their *ngonge* for a similar period, they give them up to their *ahamani*. Together they go into the bush where they break up their wands and put them either into a pit or in the forked branch of a tree. Before the *m'wichila* leaves, he brings to the chief all his takings and these are divided between them. 881

Mention has been made above of the *ingonge* and it now remains to consider these more fully. The figures vary in subject, in number and in arrangement. At the ceremony at Kumnanma's, the following were arranged in a long line beginning with the whale and ending with the python before *ching'undang'unga* (Pl. X, fig. 2). 778 825

1. *Nahungwani* ..... the whale (Pl. XI, fig. 7).
2. *Nyoma* ..... the crocodile (Pl. XII, fig. 1).
3. *Chimi* ..... the leopard (Pl. XII, fig. 3).
4. *Mbunda* ..... the zebra (Pl. X, fig. 6).
5. *Nyuba* ..... the scaly anteater (Pl. XII, fig. 2).
6. *Nhumundu* ..... the hippopotamus (Pl. XII, fig. 4).
7. *Kunga* (*nakunga?*) ..... (Pl. X, fig. 5).
8. *Mbalagi* ..... the sable antelope (Pl. XI, fig. 3).
9. *Wahungwe wa chikuwa-bulala* ..... the woman dead in child-birth (Pl. XIII, fig. 2).
10. *Lipuwo* ..... the sun (Pl. XI, fig. 4).
11. *Lihokwa* ..... the scorpion (Pl. XII, fig. 6).
12. *Mbale* ..... the plate (Pl. XI, fig. 6).
13. *Likwamundu* ..... a kind of cloth (Pl. XI, fig. 5).
14. *Njoni* ..... the lightning-lizard (Pl. XIII, fig. 4).
15. *Sokota* ..... the iguana (Pl. XII, fig. 5).
16. *M'undu* ..... the man (Pl. XIII, fig. 1).
17. *Lipuhwa* ..... the wild pig (Pl. XI, fig. 1).
18. *Sungula* ..... the hare (Pl. XI, fig. 2).
19. *Sata* ..... the python (Pl. XIII, fig. 3).

Beside these, *Nyasa*, the lake, nearly always appears;[1] *Mwezi*, the moon, the drunken woman, and certain animals may be represented, and in addition, *chiuta*, "the dwelling place of all the old spirits." Each particular *m'wichila* has his favorite figures about which he sings, always commencing, however, with the whale.

Reproduced here is the series of *ingonge* at Kumnanma's village sketched at the time of my visit. It seems probable that originally the same set of figures was always reproduced. It is hard to trace their significance with any certainty. Natives aver that they are made only for instructional purposes. "The animals are made so that the boys may recognize them, while some of the other figures have reference to customs." They deny the more in-

[1] Cf. Stanner and Depuy, 'The initiation ceremony for boys among the Yao of Nyasaland,' op. cit., Pl. III, fig. 3.

3: Stanzus D-5 (ca. 1912) 1922 FT7 Yao FT7

778
825

tersting possibility of a totemic origin and it is, of course, true that at the present time the Yao have few clan names referring to animals and practically no clan food taboo.

At Mkangula's village in September 1913, I saw the *ingoge* figures being made. The long grass was cleared away and the earth hoed up into heaps, roughly of the shape and size of the figures to be made. A number of women were employed carrying water from the stream with which the mounds were well moistened and moulded into more definite form. The outlines of the figures were then drawn in, all by one oldish man, with flour smeared on by hand. In drawing *nahungumi*, it was interesting to note how the efforts to keep to symmetry failed.

Of *nyuma*, *chinsi*, *ngaba*, *ndomondo*, *mbalapi*, *nakata*, *lipulusu*, *nato*, I have little to add; the *wali* are told of their habits, whether they are good to eat, whether they are dangerous, etc.; and all the stories about them. *Mbunda*, the zebra, is always represented in duplicate for some unknown reason. *Sungula* is pointed out in reference to a story the boys have been told at *Ndapala*, namely, that the hare is good to eat but they must not eat it till after they are married and their wives have borne children; otherwise they will be childless. The superstitition regarding the hare is mentioned elsewhere. *Njasi* is the hypothetical lizard-like animal which lives above the clouds and is seen as lightning. *Likwiambo* is a cloth which the Yao used to wear. In the presence of his chief, a man must not throw a fold over his shoulder. *Mbale*, the plate, refers to the chief's plate from which he eats. *Likoloto:* It is said that the old people used to eat scorpions and the people of Mangoche, Amangoche Yao, used to call the Amachinga Yao the "*Mabolokoto* eaters." *Lyuwa* is the sun, the giver of daytime. *Wakongwe* is a representation of a pregnant woman who has died undelivered because her husband was unfaithful. This is a well recognised superstition and one among others of equal moral value, inculcated into the youths during their stay at *Ndapala*. Though rough, *wakongwe* is a very realistic figure. The woman is evidently lying down, as one hand supports the head, the other hand grasps the thigh as if she were in pain; the breasts are made large and the figure being in relief, the prominent abdomen, and expanded umbilicus are noticeable features. The face and pudenda are modelled in clay and superimposed on the earth figure; a maize cob stalk is placed in the nose to counterpart the nose-button worn by women.

In contradiction to *wakongwe*, *mundu* is symbolic of the man who has led a proper life and is blessed with a child. The child is shown on one side. On his other side is seen a conventional illustration of a spear, possibly to indicate that the figure is that of a man. I am not very sure about *Kanga;* it may be meant for *nakanga*, the woman who officiates at *Litiso;* there is nothing about the figure to suggest a woman and I could learn nothing concerning it.

Nahungumi: There appears to be some difference of opinion about this animal. Formerly I accepted the translation given by Scott,[1] namely, the whale. Others have supposed

[1] David Clement Scott, 'A cyclopædic dictionary of the Mang'anja Language,' Edinburgh, 1892, p. 421.

3: Stannus D-5 (ca. 1912) 1922 FT7 Yao FT7

that the word refers to some large animal which lived or may still live in the big lakes. The older natives say of *nalumgumi* that "it lived in the big sea at Zanzibar. It would come and lie on the surface of the water, maybe near a village; then the people would go down and cut lumps of meat off without its knowledge; the wounds healed up immediately. Meat from different parts differed; some was nasty to taste. It was a very large animal indeed and never lived in the lakes." They distinguish it from *liporo* of the Anyanja which was "bigger than a hippopotamus but not so big as *nalumgumi*, lived in the lakes of Nyasaland, in the deep parts as at Tunde on Lake Chilwa; was very fierce and killed the hippopotamus; would upset canoes. There are no more *liporo* but probably there might be." One of my informants, a man of forty, said his father had been told of them by his father, but he had never seen them. At the present time, other natives say that the *nalumgumi* used to live in the lakes but they seem really to refer to *liporo* and I think looseness of speech only accounts for the idea that the word refers to anything but the whale. Hetherwick translates *nalumgumi* as a large fish figuring in the initiation ceremonies,[1] a poor description, since it always has four limbs. The word *nalumgumi* meaning a whale, occurs among the Mchiwambo people who live at Quilimane. These people do not make any figures on the ground at their circumcision ceremonies but it is interesting to note that their *wali* carry staffs similar to the *ngongo* on their return to the village. I think, therefore, there can be little doubt that the word refers to the whale which was probably well known to the Yao before they migrated so far inland as Nyasaland. Whether the word was adopted or not in these parts in the past and used for some indigenous animal now extinct, one cannot be quite sure, but I think it is improbable; I believe the confusion with *liporo* is of quite recent date. *Liporo* itself appears to have been some large mammal of the hippopotamus type, extinct probably for some time. The stories of *liporo* resemble those of the monster of Lake Ngami and are not without interest. The most weighty evidence against the animal now depicted at the *Unyago* and called *nalumgumi* being a whale, is found in the representations themselves. It has a neck with a knob at the junction of the head with the body and a second knob at the junction of the body, tail and hind limbs; the tail is well marked. The "webbing" between the limbs is, I think, a means of finishing the figure and is not supposed to represent some anatomical feature of the beast. The same is, I think, true of the markings, lines, dots, etc., which are purely decorative. Reference has already been made to its tusks. The little mounds on either side of the body of the animal, on one side within the "webbing," are spoken of as the "little hills" and are not suggested breasts as one might imagine. The hollows have no significance according to my informers except that they are where the *m'michila* stands; the mark which looks like a native hoe, I believe, is meant to represent the hoe which has been used in making the figures.

Chinyasa, the lake: the photograph in the article by Dr. Davey and myself of *Nyasa*[1]

[1] Op. cit., p. 320. [1] Op. cit., Pl. III, fig. 2.

3: Stanmus D-5 (ca. 1912) 1922 FT7 Yao FT7

778 gives an excellent idea of the average figure; it is circular in plan, often with a little hillock in the centre known as *betumbi kangungubi*, "the hill of debt," and disposed in the quadrants are four depressions.

881 When the *usili* are introduced to *Chinpasa*, they stand round in a circle while the
778 *m'michila* stands in one of the depressions with perhaps two of his assistants in others.
533 The *m'michila* sings:
539

"*Nyasa kungungula chinungungula mumunche ningumila kwilombo, amai!*
"The lake enormous was I born child I would have died on the plain, mother!"
Ninguwila ninguwila!"

or

"I have lived by the great lake all my life; I should have died in the plains."

while all three make movements as of paddling a canoe. The depressions are said to represent canoes. I believe this is the recognised form but I have also seen an oblong figure with two outlines of unmistakable canoes. *Chinpasa* is usually found near *nalumgumi*.

Chiuta, when represented, stands beyond *mbunda*. It consists of two trenches at right angles forming a cross, which are covered over with logs and earth and the whole outlined with flour in a decorative pattern. The end of one limb of the cross is left open and round this opening a screen of grass is made. As the *usili* approach *Chiuta*, some of the assistants or *abawusi* descend into the trenches for the ceremony. The *m'michila* takes up his stand at the centre of the cross and sings:

"*Chiuta, amao, kwiola chiuta!*"
"*Chiuta, mother, come see chiuta!*"

881 Then as everyone says "Listen, listen!" crying is heard "coming out of the bowels of the
778 earth," followed by drumming and the singing of the *chindimba* songs (sometimes *mbunda*
[775] or *masche*); a horn is sometimes heard as well as *lululuta*, trilling with the tongue against the lips. *Chiuta* is called "the resting place of all departed spirits" and the sounds are said to be the echoes of their doings. The word is not met with elsewhere among the Yao, although it occurs in the Chinyanja and in other languages of this country with the meaning "the heavens."

Chiwuta is said by Hetherwick[1] to be "a large fish that forms one of the pictures at the *Ungapo*," but I have never seen it or heard of it, and I am doubtful of the correctness of the statement.

778 *Ching'undang'unda:* Dr. Davey's photograph[2] is an excellent reproduction of this
[531] figure, which consists of a mound of earth flattened on the top, and decorated with geometric patterns in flour which extend to the ground. In the centre and at the four corners, so to speak, are implanted billets of wood with decorative lines and dots in black and red on the white wood (Pl. X, figs. 1, 2). The billets are three inches in diameter and project twelve to fifteen inches above the ground.

[1] Handbook of the Yao language, op. cit., p. 142. [2] Op. cit., Pl. III, fig. 2.

3: Stannus D-5 (ca. 1912) 1922 FT7 Yao FT7

The actual meaning of this figure it is very difficult to ascertain. It may be referred to as "the little hill of debt" signifying, I believe, an idea that everyone owes a debt to his *Unpipe*, to his progenitors, and to his own future progeny. It is the spot where medicine has been buried to insure the *Unyago* success, and may be looked upon as the keystone of the ceremonies which take place at *Lupanda*. The derivation of the word is probably from *ku-ulipa*, "to heap up earth into a mound," or maybe from *ku-unda*, "to teach children manners," but it is uncertain as the word is variously spelled; the spelling I have given follows the pronunciation of the old people. 778

Lupanda: This consists of a mound of earth closely resembling *ching'undung'unda* in shape and decoration with similar wooden billets at the base, while on the top is often planted a branch from a tree (Pl. X, figs. 3, 4). The word is derived from the verb *ku-panda*, "to plant" and signifies the place which the *m'wichila* marks for the ceremonies to take place.

Reference has already been made to the assistants of the *m'wichila*. The chief assistant has been already mentioned; some three or four others who aid him are friends of the *m'wichila* from his own village. They participate at the essential moments of the ceremonies, singing, drumming, or dancing, and together with some of the *akamusi*, take part in *chiuta*. Beside these, there are regular bands of trained drummers and dancers who attend *Lupanda* and dance in the village in the morning and at *Lupanda* in the afternoon of the day of return. They usually dance *chambe* and *sanje*. They are men who come for the fun of the thing and, of course, may gain a good deal from presents. On so important an occasion, there is much criticism of their performance. Should one of them not dance well enough to please the old people, they may call out, "Pluck off his feathers!" and the unlucky fellow has all his dancing kit and any clothes beside stripped off and he is driven forth naked, the laughing stock of the crowd. 881

Chiputu: The initiation ceremony for girls is on lines very similar to the boys' ceremony. The age at which the girls take part is from about ten to fourteen years, though lately they have been much younger on the whole, in consequence of the older people's wishes that their children shall benefit from its instruction before they come under civilising influences and the recently introduced mission teaching.

When a number of girls have reached the proper age in a village or group of villages, as with the boys, the chief is approached and he arranges a date for the ceremony during the same season as *Lupanda* and for similar reasons.

The woman corresponding to the *m'wichila* who arranges everything is called *mtewi*. Each girl *mwali* about to be initiated is looked after by a woman, her *akamusi*.

The girls, their guardians, and the mistress of the ceremonies, together with the inhabitants of the villages adjourn, as in the case of *Lupanda*, to a spot some little distance from the main village, called *Chiputu*. Here grass shelters have been erected beforehand and food has been collected.

3: Stanmus D-5 (ca. 1912) 1922 FT7 Yao FT7

There has never been any shortage of land and therefore the plotting out of gardens was a matter which caused little trouble. A man wishing to make a new garden the next season simply marked the site in the bush by scoring some trees or hoeing around some patches of grass and tying the grass ends into a knot. If anyone else came along and hoed this plot, the man who had marked it out still claimed it and need not pay for the hoeing done. Whenever a man was doubtful about a piece of land, he would ask advice of the headman of the village. 423

When an abandoned garden had become overgrown, anyone wishing to take it up applied to the headman who sent him to ask the original owners whether they wished to take it again. The newcomer could take possession only with their permission. 361

Often if a village were moved, during the first season the people simply put up shelters in their gardens. Later, the site of the village was chosen and around it a medicine man sprinkled medicine to insure happiness and prosperity. The tree from which this medicine was made became sacred to the village and might not be used for firewood, or was subject to any other taboo the medicine man might care to make. He might also say, "In this village there shall be no pounding of grain at night," etc. 423 [789] [778]

If a village were to be built near a spot previously inhabited, medicine and offerings were made to the departed spirits of the former occupants to put them at rest and "open" the place to the newcomers. The beer-pot from the grave of some former chief or headman, who was supposed to have directed the destinies of the old village, was brought to the new location and beer placed in it to insure his continued guidance. [769]

In the case of a village into which a number of men had married, the sponsors of the wives went to the sponsors of the husbands and asked permission to move the village.[1] Later, beer was brewed in the new village and the sponsors invited to come and drink and "put foot in the new village." [273]

Relationship. Family relationship among natives presents certain difficulties to the Europeans accustomed to equivalent relationship of males and females on both sides of the family. In the diagram below (Fig. 1) the relationship of the two children (C 5) will be traced. The mother and father (B 10 and 9) are the *achikulu* and *wese* but are addressed as *amao* and *atati*. The maternal uncles older and younger than the mother (B 11 and 15) are called *alumbuma* and their wives (B 12 and 16) *akwapua*. The maternal aunts are addressed as *amao*, mother, anyone older than the mother being distinguished as *amao wakulungwa*, "the bigger" (B 13), a younger aunt as *amao wanandi*, "the lesser" (B 17); their respective husbands are addressed *atati*, *atati wakulungwa* (B 14), and *atati wanandi* (B 18). On the father's side the uncles are called *atati wakulungwa* (B 1) and *atati wanandi* (B 5), respectively, for those older and younger than the father, and their wives *amao wakulungwa* (B 2) and *amao wanandi* (B 6). The paternal aunts are called *atati wakungwa* (female uncles) (B 3 and 7), their husbands (B 4 and 8) *atati*. 593 601

[1] Vide supra, p. 238.

3: Stannus D-5 (ca. 1912) 1922 FT7 Yao FT7

516 731 769

knees and elbows, at intervals swaying their bodies from side to side and clapping their hands. Kasongs then ordered all to go and bathe, men and women separately. As they returned from the stream, rain began to fall.

755 769

Intercession on behalf of the sick may be made, especially by anyone who is likely to be accused of causing the illness by witchcraft.[1] The man standing with arms outstretched, downwards and a little in front of his body, the hands supine, takes some water in his mouth and discharges it in a stream on the ground, (probably as a sign of purification of his tongue), and then invoking "all the spirits above," asks that they will intercede to restore health to the sick man and bear witness to his own innocence of any wish to do the sick man injury. *Ku-pesya* is the word meaning to offer sacrifice and prayer.

769 241 782

Harvesting and hunting are occasions when sacrifices may be offered. It was formerly the custom for the chief to determine the day on which harvesting of millet should begin. On the day appointed, a big drum was beaten in the village and word passed round; then everyone would go down to his garden, gather a head of millet, and bring it back to the village where it was all handed over to the chief's headwife. After drying and threshing, a little of the grain was laid at the grave of an old chief by one of the reigning chief's advisers, the remainder being again distributed to all the people gathered together in the village meeting-place, who ate it raw. After this ceremony, harvesting began.

In passing through a millet garden, if a child asks his mother to give him some to eat, she plucks a bunch or two and reverently laying one at the foot of a *maoro* tree for the spirits or at the base of some other tree, if she cannot see a *maoro*, she gives the rest to the child.

782 224

When a hunting expedition makes its first killing, part of the flesh of the animal is laid at the base of a tree as a thank offering to the spirits and in anticipation of further favors to be conferred. All such offerings are supposed by the natives to be partaken of by the spirits, though they are well aware that they do not actually diminish in quantity. There is an interesting point in this connection: any man who has acted as *mbilo* (undertaker) to some well-known man may appropriate these offerings. In the case of the hunting offering, he will run round the tree, saying, "I am a hyaena, the spirits will not mind me," and will then take part of the flesh-offering and eat it.

In the same way, a *mbilo* may drink from a grave beer-pot after three days, when the spirits are supposed to have taken what they want.

824 778

With the exception of the *maoro* tree above mentioned (*ndima*, Chin.), and possibly another called *nsilo-nyama* (Chin.), which is never used as firewood and which is supposed to be used by *masuwi*, I do not think there are any sacred trees properly so-called. Miss Werner supposes that many of the big trees (often a species of *Ficus*) in villages are sacred.[2] The truth is, I believe, simply that a village is made naturally round a big tree which conveniently offers its shade for the village meeting place. The spirits of deceased chiefs may

[1] Vide supra, p. 267.

[2] The natives of British Central Africa, op. cit., p. 62.

824 718 be supposed to live in such trees. They are convenient natural objects for them to occupy, in fact practically the only ones to be found in villages. Trees may secondarily, therefore, be looked upon as in some degree sacred. About such trees strings or pieces of calico may be placed as an offering to the spirits of the departed. But the Yao do not erect little huts in their vicinity, hung about with strips of calico as is the custom among the Anyanja.

775 Macdonald[1] mentions the spirits in connection with Soche and other hills round Blantyre and supposes them to be the spirits of the places themselves. This I think is unlikely; they would probably turn out to be spirits bearing the names of long departed Anyanja chiefs whom the immigrant Amangoche Yao venerated just "to be on the safe side," since they had come and taken the country which long ago belonged to the former tribe. When approaching or passing any spot held to be the dwelling place of spirits, salutation is made by clapping the hands.

Spirits of the departed may enter into animals or may take the form of animals, [825] commonly lions and sometimes large snakes (python), but this belief is not so general among the Yao as among other tribes, in my opinion. An animal which is so possessed is called *lisyuka*, from *ku-syuka*, "to be transformed."

[774] Apart from this habitation of inanimate objects above mentioned by *maimu*, there is nothing that points to a belief in Animism among the Yao, so far as I know. Neither hills, rocks, streams, lakes, nor trees have their own spirits, nor are they endowed by the native mind with life.

Deceased persons appear to the living in dreams, the native apparently believing that the deceased appears in his material body.

775 787 791 They believe also in revelation of wishes of the deceased through the medium of the living. The spirit of the deceased is supposed to enter into the medium. The medium, I am informed, is always a woman, never a man. From the descriptions of some of these revelation séances, there can be no doubt that they are manifestations of *la grande hystérie*. The medium works herself up into a frenzy of excitement and in her delirium gives out the name of the deceased, the voice which speaks being that of the spirit within her. She rolls on the ground and foams at the mouth, uttering the word of revelation which is generally to the effect that some deceased chief's spirit is feeling aggrieved at the neglect of his tomb; the voice may go on to say that certain practices are forbidden, or demand that certain rites be observed by the people. The spirits which possess her are generally spoken of as *masoka*, a word which, though sometimes used as equivalent to *maimu*, usually seems to [158] have rather a sinister significance. Insane persons are called *masoka* and are thought to be possessed by a spirit, and vapor baths with exorcism may be practiced for their cure. In the case of the death of anyone who is possessed, in answer to my interrogation, I have [761] been told that both the spirit which has entered into the man and his own *maimu* leave his body.

[1] Op. cit., vol. 1, p. 70.

3: Stannus D-5 (ca. 1912) 1922 FT7 Yao FT7

1778
825
532

[361]

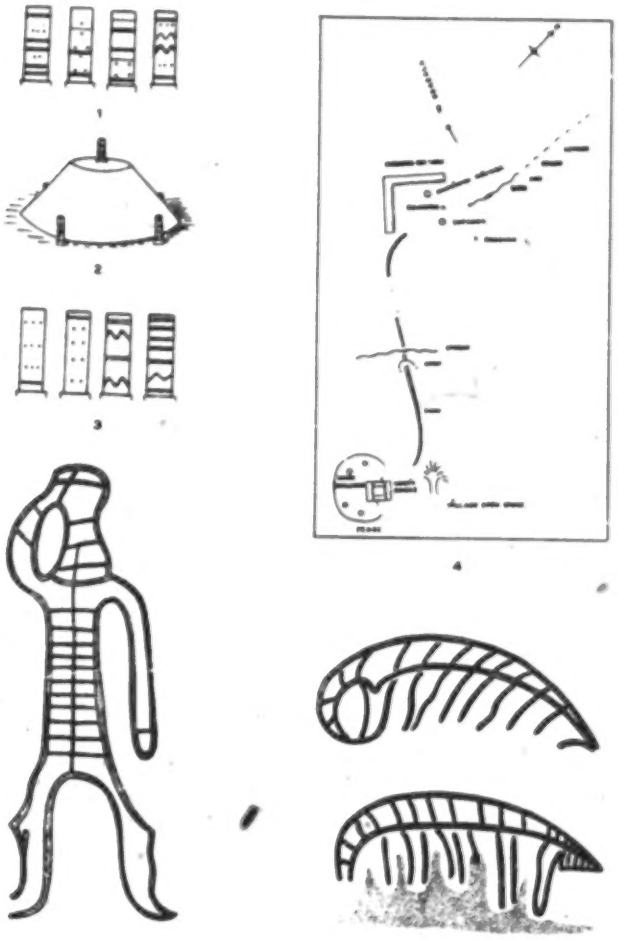

1-2. CRIBS (FRAGMENTS). 3. APPARAT PORTS: 4. SKETCH PLAN OF APPARAT. 5-6. ZITAU FIGURES

[End Plate 10]
[Explanation of plates, cat. 116, p. 265]

3: Stannus D-5 (ca. 1912) 1922 FT7 Yao FT7

H. S. STANNUS—WATAO PLATE XI

778
532
825

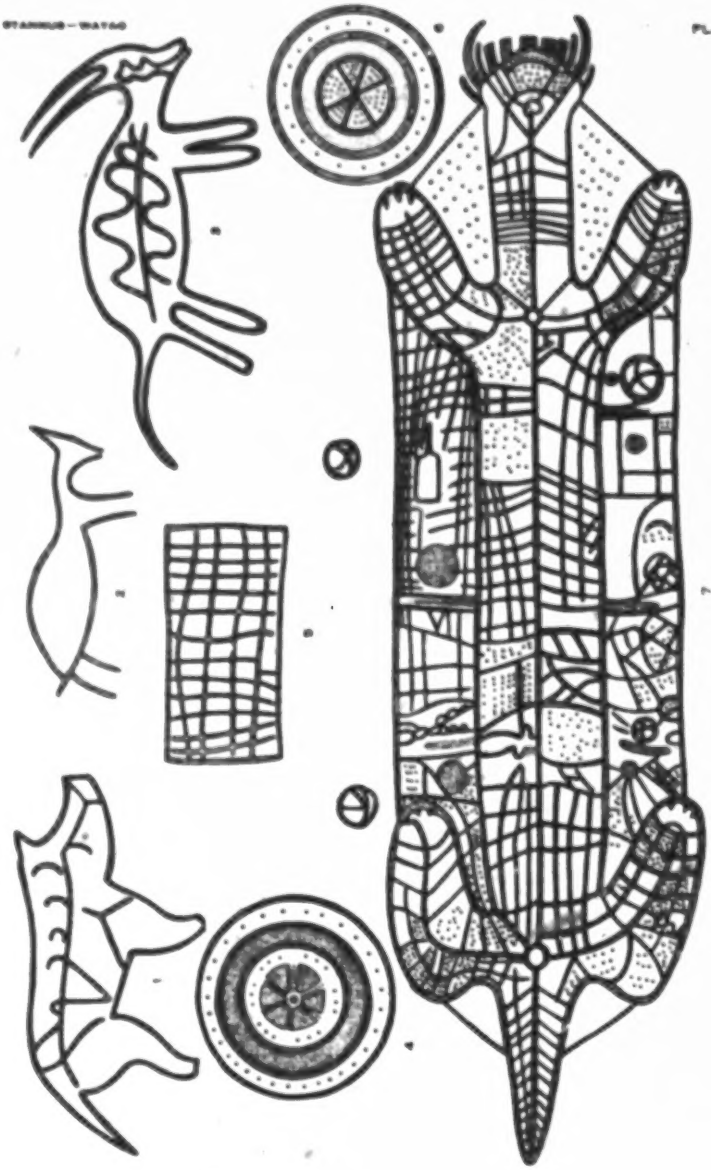

[End Plate 1L]

[For Plate Explanation, see cat. 116, p. 265]

3: Stannus D-5 (ca. 1912) 1922 FT7 Yao FT7

778
825
532

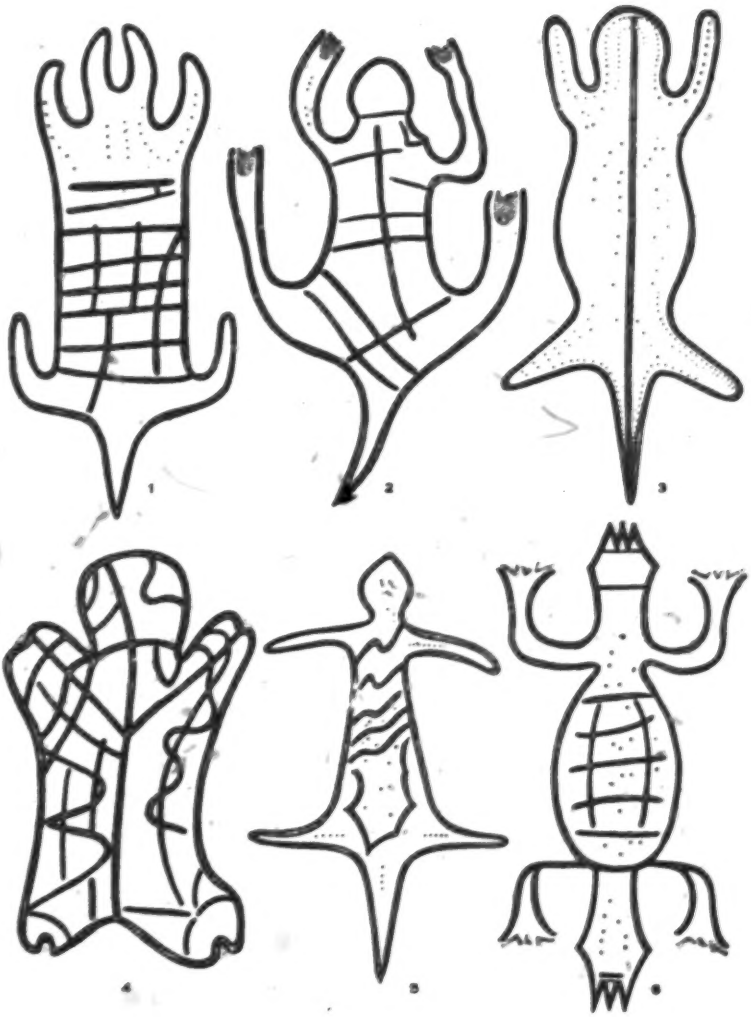

WAYAO FIGURES

[End Plate 12]

[For explanation, see cat. 116, p. 265]

3: Stannus D-5 (ca. 1912) 1922 FT7 Yao FT7

778
825
532

WAYAO FIGURES

[End Plate 13]

[For explanation, see cat. 116, p. 265]

7: Hetherwick M-5 (ca. 1900) 1902 FT7 Yao FT7

775 present fortunes. But it is to the human soul after death, when it is considered as having an influence on the lives and fortunes of those it has left behind in the world and consequently as a power to be propitiated and honoured, that the term *mulungu* is more strictly applied. Freed from the body it passes to *mulungu*, and there is regarded as endowed with powers which it never possessed when alive on
769 earth. To pray to such a spirit is described as *kulomba mulungu*, to worship *mulungu*, never *lisoko* in this case. Such *mulungu* worship enters largely into Yao religious or social life. In almost every Yao village there will be found a shrine which is the centre of the worship of the inhabitants. It consists of a carefully
346 built hut enclosed within a strong grass fence or hedge of a species of cactus plant.
769 The hut itself is built of the usual native materials—the walls of wooden posts,
778 bamboos, and strong reed grass bound together with bark-rope and plastered over with clay or stiff mud. The roof is of grass laid on a framework of bamboos, and is generally covered with long stripe of white or coloured calico. On the ridge or apex of the roof are fixed a couple of flags or an umbrella or two. One wall is usually left open so that the interior is easily seen. Within, from the bamboo rafters are suspended handkerchiefs, cloths, bunches of beads, etc., all offerings to the *mulungu* of the dead headman or chief from his friends and relatives. The floor is of clay carefully smeared with sand in native fashion. A raised platform or mound of earth in the centre marks the spot where the grave was made. The
764 *awilo* or officials who preside at the funeral obsequies, first dug for about 8 or 10 feet down in a perpendicular direction, and then on the western side of this well they hollowed out a shallow cave in the earth. In this the body was placed, laid on its side with the knees bent up under the chin, and the face turned towards the east. Various articles of personal property were next placed beside the corpse, clothes, ivory, guns, axes, hoes, etc., and the mouth of the cave closed up with woolen posts and a strong reed mat. The grave was then filled in and the surface
[769] carefully finished as we have seen. At the head of the mound a native pot was fixed in the ground for the reception of the offering of beer which is an almost invariable accompaniment of any act of worship paid to the *mulungu* of the dead.

769 Such a shrine marks the grave of almost every Yao chief or headman, and is
[775 regarded as the abode of his soul or the spot where his *mulungu* is most accessible.
622] If his successor is about to undertake a long journey or enter on any warlike expedition against an enemy or neighbour, he must first *kutopa mbepesi*, place an offering here to secure the favour and assistance of the *mulungu* of the dead. Should a long-continued drought endanger the prospects of the grain crop, the departed chief must be solicited to send the lacking rain. A feast is first prepared, almost always of beer, sometimes with the addition of native porridge, fowl, or game. The worshippers gather round the shrine bringing part of the food which they have prepared. Their priest for the occasion is the successor of the dead chief, sometimes one or other of the *awilo* who placed the body in the grave, or it may be that any other near relation of the dead man is chosen to represent the people and act
[602] as their spokesman. The nearer the relationship the more influence will he have with the dead.

7: Hetherwick M-5 (ca.1900) 1902 FT7 Yao FT7

with the dead. He approaches the shrine, opens the gate of the fence, takes a potful of beer and pours it into the pot at the head of the grave. Next he places the basket of porridge and the plate of meat on the mound beside it and retires. Kneeling down outside the gate facing the shrine and a few yards in front of the people he chants his prayer in a monotone, each petition commencing with "Chonde, chonde," "Please, please." All the while the people clap their hands in unison with him and sing the response as they do in a native case in the chief's court. 769

When the offering has been made at the grave, the rest of the beer or other food is consumed by the worshippers. Guns are fired as a token of respect to the dead, and the rest of the day is spent in dancing. [535]

Such shrines are to be seen in almost every Yao village where the inhabitants have been located for any length of time. They are regarded with awe—the little boys as they pass whisper to each other in a warning tone, "masoka." Should the village be moved to any other district, the old shrine is not forgotten. Periodical visits are made to it with the usual offerings. In cases where the old home has been occupied by a people hostile to the old inhabitants, such visits are usually made during the night, and the people awake in the morning to find that the old chief's grave in their midst has been newly repaired, and a fresh offering of food placed at its head. 778 769

Sometimes such shrines are found on the summits of hills which once may have been a refuge from the enemy in time of war, but which now lie lone and deserted. Thither in their need the people make their way with their offering of food and beer, and their prayer for rain or suitable weather for the crops. Near Blantyre such shrines are to be seen on the tops of Mount Sochi and Mount Michiru. The former is the abode of the spirit of Kankhomba, and the latter of Mpalale, both old Maravi or Mang'anja chiefs who doubtless fled there seeking safety from the war of the invading Yaos, and died leaving their *masoka* to be the *malungu* or spirit of the mountain. Some years ago, during the fear of an Angoni invasion, the Yaos of Mount Sochi fled to the hill-top for refuge, and there the old chief Kapeni died. He was buried close to the grave of the old Kankhomba, and now, when the Yaos on Sochi make an offering, it is to the spirit of Kapeni that the homage is paid, and the shrine of Kankhomba lies neglected.

Only the graves of chiefs or headmen are thus treated as shrines of worship. The burying place of slaves and the common people lies away in the thick bush, where only the rank grass or the thicket of old trees marks the spot. No offerings are ever taken there, for such as are buried there can have no influence in the spirit world. The dead are buried, the broken pot or basket is left on the grave to mark the spot, and none ever seek to go there save to lay another in the same neglected ground. 554 764 769 778

II. But the word *malungu* is used by the Yao with a wider application. Etymologically the word is connected with the root *lalungwa*, which in so many of the other branches of the Bantu tongue appears as *lulu* or *kuru*, and signifies "great" or "old." It is the same root which appears in the Kaffir word for God, 776 197 192

1: Tew E-4 (no date) 1950 FT7 Yao FT7

Land Tenure

The rules governing land tenure were those which would be expected of a society which suffered from no land shortage. A man was entitled to as much land as he could cultivate, the limitation being that he should consult the headman as to his neighbours' boundaries. Abandoned gardens could only be taken up with the permission of the original cultivator.[1] 423

MAIN CULTURAL FEATURES

Religion

The Yao are largely Islamized. Codrington remarked that the perpetuation of this faith was distinctly antagonistic to British influence, and it received considerable attention from chiefs and headmen. Schools for the instruction of youth in reading and writing Swahili in Arabic characters were established in nearly every village, where also prayers were made at regular intervals in the day. The Moslem fasts and feasts were also observed, and the Yao were not inclined to embrace Christianity.[2] Their conversion to Islam did not take place till the nineteenth century, long after their first introduction to the Arab traders at Kilwa and Zanzibar, although they had adopted Swahili modes of dress much earlier.[3] 771 787

According to Hetherwick, Islam is strongest on the lake shore and on the east border of Nyasaland, chiefly round the old slave-trade centres. Makanjira's on the south-east side of the lake, and Domira Bay on the west, were the centres of Moslem propaganda. The Moslem population around Zomba and Blantyre consists mainly of Yao men, who have built themselves mosques in their own villages, or use the large mosques of Indian Moslem merchants. In the west districts, lower Shire, Ruo, central Shire, Lilongwe, Fort Manning, the Moslem population does not total more than 732. In the districts round Fort Johnston and Kotakota, the Moslems are one-ninth of the total population, while in Zomba district they number one-fifth.[4]

The Yao pagan religion was a form of ancestor worship. Apart from diviners and medicine men, there was no regular priestly profession. Intercession with the ancestors was performed by the chief, on behalf of the chiefdom, by the headman on behalf of the village, and by the head of the matrilineal kin for his dependents.[5] A man was qualified to approach his ancestors individually only if he had been initiated and had a house of his own.[6] 771 769

Some of the ritual duties of the chief have already been mentioned. When his people were visited by drought or epidemic, or when he fixed the day for the beginning of the millet harvest, he made an offering of flour and of beer poured into a pot in the ground at the grave of a dead chief. The village headman made similar offerings to the spirit of his dead predecessor. The spirits of the dead Nyanja chiefs, ousted by the Yao invasion, were regarded as still powerful in the homeland of their people. For instance, Kangomba, whose shrine was on Mount Soche, used to be appealed to for rain, and on the principle that the most appropriate mediator between a dead man and the living is a descendant of the former, the Yao chief, Kapeni, when he wished to propitiate 771 631 622 775 782

[1] Macdonald, 1882, vol. i, pp. 177-9; Sanson, 2, 1903, p. 280.
[2] Codrington, 1898, p. 526; see also Maples, 3, 1893.
[3] Young, T. C., 4, 1932, p. 27.
[4] Hetherwick, 4, 1927, p. 127.
[5] Werner, 1906, p. 270; Sanson, 4, 1922, p. 311.
[6] Macdonald, 1882, vol. i, p. 63.

1: Tew . E-4 (no date) 1950 FT7 Yao FT7

775 Kangomba, used to persuade Nyanja to help in the sacrificial rite. When Kapeni in
782 turn fled to Mount Soche from the Ngoni, and died there, the Yao addressed their offerings to him, not to Kangomba.[1] The word *Mulungu* has sometimes been interpreted to mean Supreme Being, God, Creator, but among the Yao it seems not to have
[776] a personal connotation. It was used to describe the agent in any mysterious event,[2] or the place where the ancestor spirits (*masoka*) were supposed to dwell. Daily life was
[769] full of acts of respect towards the ancestors, who were regarded as jealous of the living, and requiring constant propitiation.[3]

Sorcery

754 Accusations of witchcraft and measures for dealing with it play a dominant role in Yao social life. With certain exceptions nearly all diseases and deaths are thought to be caused by sorcery. The exceptional causes are: the hand of God, old age, the transgression of certain taboos, and battle wounds. If sorcery is suspected the relatives of the sick or dead man consult the diviner to identify the offender.

Yao (in common with the Maravi and many peoples of Central Africa) believe that sorcerers have a craving for human flesh, which they satisfy by killing with magic the victims of their malice and hatred. They acquire their magical powers by an apprentice-
[835] ship, which might include incestuous relations with mother, sister, or mother-in-law, or sleeping on the grave of the mother for one night. The sorcerer then learns the medicines and finally demonstrates his power by killing a young relative by magic;
[266] he waits till the victim is buried, and then magically exhumes him for the secret feast with his fellow sorcerers. Each sorcerer who shares the flesh owes a debt to the one who secured the victim.

[751] Charms are used as preventive measures against sorcery. When a diviner has
754 diagnosed the cause of death as sorcery, retaliatory measures are taken. The headmen
683 of the village could either call in the witchfinder to identify the offender or he could call in the diviner to take action against all the sorcerers in the village. After the
[695] diviner, *Mabitalila*, had revealed the guilty ones, they were challenged to take the poison ordeal to prove their innocence. If they died, the proof and the punishment were simultaneously accomplished. If they survived, the diviner was held to have been at fault and they were acquitted. The witch doctor was supposed to entice sorcerers to the graveside, and slay them with magic more powerful than their own.

[695] The diviner's findings are to-day checked by the poison ordeal administered to a chicken. A sorcerer detected in this way might be asked to provide medicine for the man whose sickness he had caused, or after a death he might be compelled to pay compensation. If the accused is a village headman, he will not be summoned before a chief, but his brother will take the villagers away from the sphere of his influence, or he may be chased away from the district. Accusations of sorcery follow certain regular lines. Nearly all accusations fall on relatives. Diviners are consulted by matrilineal relatives of the sick or dead person, and the man most usually accused is the brother of the accuser, or the husband of his sister. Witchcraft is therefore a manner of expressing the hostilities latent in these relations, which are, in the Yao social system, full of tension.

[1] Macdonald, 1882, vol. i, p. 70.
[2] Hetherwick, 3, 1902.
[3] Hachet, 1935, pp. 14–15; Macdonald, 1882, vol. i, pp. 58–75, 204–13.

2: Mitchell E-5 (1946-1949) 1956 FT7 Yao FT7

631 advocates the more orthodox type of Islamic devotion in which
643 a quiet restrained manner is emphasized. As far as I know the
745 *twaliki* sect are confined entirely to Jalasi's chiefdom and the *nikutu* to Kawinga and Liwonde. In this matter, Nyambi's people side with Kawinga's and Liwonde's.

On the other hand, local informal organization is well de-
631 veloped so that Chiwalo who is at the point of juxtaposition of
643 Kawinga, Liwonde, Nyambi and Jalasi chiefdoms, may try cases
692 involving headmen from any of these areas, and they usually accept his arbitration. His is the nearest court house. The actual boundaries of the four areas, however, are very clearly recognized and Chiwalo realizes the limits of his jurisdiction. Though he may arbitrate in a difference between headmen, he would not dare to apportion land outside his area. Headmen living on the boundaries of two chiefdoms arbitrate in each other's cases; the villagers under them intermarry. A village in Chiwalo's may
621 procure garden lands in Jalasi's area, and children may be initiated
631 at ceremonies held by headmen in other chiefdoms. There is no
643 clear break in the normal social relationships of people across the boundaries of chiefdoms, and their members interact as freely with each other as members of two villages of the same chiefdom. The cleavage between the villages on different sides of the boundary of a chiefdom becomes apparent only in special situations.

631 The formal relationships of the chiefs, set by the history of their conquests and their kinship, and incorporated in and slightly
643 modified by the Administrative framework, are overlaid by an informal local organization where the interaction of village headmen only conforms to the formal pattern when no agreement can be reached.

The Position of the Modern Chief

643 In ritual situations a chiefdom is clearly differentiated from its neighbours, and many of these situations arise in the cult of
769 tendence on the ancestor spirits. The ancestor cult has fallen
782 away almost completely among village headmen, but among the chiefs it is still strong, and appears particularly in the rain-prayers and the initiation ceremonies. Later, I shall discuss at length the importance of the chief's sanction before headmen may conduct initiation ceremonies. This is because the spirits

2: Mitchell E-5 (1946-1949) 1956 FT7 Yao FT7

of the ancestors of the chief are supposed to affect the welfare of the initiands. Though some village headmen may conduct initiation ceremonies they are unable to offer rain-prayers. These are offered by a chief on two occasions. The first is in November, before the rains have started. The chief's wife and some women from the bigger villages in the near vicinity of the chief's village gather at his hut. They brew beer—*ukana wacisoka*, the beer of the spirits—to be used as a libation. At sunset on the appointed day the chief goes to the shrine tree where some headmen have gathered, and pours some of the beer into a pot, partly buried at the root of the tree, while he invokes all the spirits of his departed ancestors—mainly matrilineal but occasionally some patrilateral. He then entreats the spirits to send some rain and to look after their 'children' in the land. Sometimes a length of calico is hung on the tree as an extra offering. Should no rain fall the chief will have to repeat the offering until it does fall. When the rains have ended in March he makes a second offering 'of thanks'.

In the context of the present discussion, the important point is that it is only the chief who can make this libation and offer this prayer. If his plea fails the whole area starves, and no headman may supplicate his ancestors on his own behalf or approach the chief's ancestors through his own ancestors. The grain for the beer comes from the various villages, but not on a fixed rate of levy. Some villages never contribute. The chief buys the offered cloth on behalf of his people. When in 1948 the cloth on the shrine tree was stolen, Chiwalo imposed a levy on the village headmen in the area so that a new cloth could be bought. Here the boundaries of the chiefdoms are important, and no headman outside Chiwalo's area was approached. A village headman from Jalasi's area, though geographically much closer to Chiwalo, relies on Jalasi's rain-offerings and may not approach Chiwalo or plead with him to offer a rain-prayer to his ancestors.

Another ritual situation in which the limits of the chiefdom appear is during the institutionalized pillage on the death of a chief. I have not been in any area when the chief has died, so that I rely here on the tales of informants. During the mourning rites certain feasts are held. The food for the mourning feast of a commoner or village headman is provided from his estate

3:Stanna D-5 (ca. 1912) 1922 FT7 Tao FT7

as to procuring medicine for him from a medicine-man. If the caster of lots is suspicious that 754
some one has caused the illness, he will at the same time add, "Let so and so pray," men- 695
tioning the name of the man whom he suspects. Following the advice given, the medicine-
man is consulted. He promises to get medicine for the sick man and goes into the forest
to search for it. Having returned, he prepares his decoctions and having first partaken
of a little himself, he gives it to his patient with further instructions. The friends of the
sick man having returned to the village, indirectly ask the man on whom suspicion has
been cast to pray for the sick man saying, "He is covered by some spirit." The man prays, [782]
sometimes using *nkopani* and beginning *chonde! chonde!* "please! please!" and goes on to
ask *Mlungu* to take away the spirit which has covered the sick man, adding that he himself
is innocent of any ill doing against the man and that any grudge he may have had against
him is now forgotten.

If the sick man recovers, well and good, but should he die, there is more to be done. 754
The morning following the burial, the relatives go to the *chief* and in answer to his inquiry 695
of what they are going to do, they say they must again consult the caster-of-lots. They 791
will choose some one who lives a long way off and is not cognizant of the death of their
relative: those who go to him have not been shaved after the funeral. Much the same business
is gone through as on the first occasion but, in the end, the caster-of-lots is told that they suspect some one unknown to have brought about the death of their relative. The names of all the possible persons are given, the lots cast in each case and, eventually, one is picked out as the guilty man; the caster-of-lots saying, "If I am not telling the truth, you can test my words by giving *mwai* (ordeal poison) to a fowl; if it does not die, come back and break up all my properties."

He may have gained information from his lots that the suspect is a man of power gained by some special rite, e.g. the midnight bath on the ant hill, in which case he will insist that the fowl poison-ordeal must take place on an ant hill *or* he will give other specific instructions. On the way back, the relatives will buy two fowls; *mwai* will be prepared by a boy who has not passed through his initiation ceremonies, and two of the party will be chosen as pleaders, one for the deceased, the other for the accused. One fowl is then selected to represent the accused and the poison administered according to the conditions laid down by the lot-thrower, while the two pleaders give injunctions to it, one saying, "You are guilty; you shall die"; the other, "You are innocent and you shall show your innocence by vomiting the poison and recovering." If the fowl dies, a third man cuts off its head, saying, "I am the burier of the dead." *Mwai* is then administered to the second fowl to ascertain whether any other persons are involved. The head of the first fowl is singed, stuck on a stick and carried back with the party towards their village. A little way outside, they halt in the bush, and send word to the headman that they are returning. He then comes out privately to see them, asking what has happened, and is told all the events in sequence.

3:Stanmus D-5 (ca. 1912) 1922 FT7 Yao FT7

516 731 769

knees and elbows, at intervals swaying their bodies from side to side and clapping their hands. Kazunga then ordered all to go and bathe, men and women separately. As they returned from the stream, rain began to fall.

Intercession on behalf of the sick may be made, especially by anyone who is likely to be accused of causing the illness by witchcraft.[1] The man standing with arms outstretched, downwards and a little in front of his body, the hands supine, takes some water in his mouth and discharges it in a stream on the ground, (probably as a sign of purification of his tongue), and then invoking "all the spirits above," asks that they will intercede to restore health to the sick man and bear witness to his own innocence of any wish to do the sick man injury. *Ku-peqa* is the word meaning to offer sacrifice and prayer. 755 769

Harvesting and hunting are occasions when sacrifices may be offered. It was formerly the custom for the chief to determine the day on which harvesting of millet should begin. On the day appointed, a big drum was beaten in the village and word passed round; then everyone would go down to his garden, gather a head of millet, and bring it back to the village where it was all handed over to the chief's headwife. After drying and threshing, a little of the grain was laid at the grave of an old chief by one of the reigning chief's advisers, the remainder being again distributed to all the people gathered together in the village meeting-place, who ate it raw. After this ceremony, harvesting began. 769 241 782

In passing through a millet garden, if a child asks his mother to give him some to eat, she plucks a bunch or two and reverently laying one at the foot of a *maoro* tree for the spirits or at the base of some other tree, if she cannot see a *maoro*, she gives the rest to the child.

When a hunting expedition makes its first killing, part of the flesh of the animal is laid at the base of a tree as a thank offering to the spirits and in anticipation of further favors to be conferred. All such offerings are supposed by the natives to be partaken of by the spirits, though they are well aware that they do not actually diminish in quantity. There is an interesting point in this connection: any man who has acted as *mbilo* (undertaker) to some well-known man may appropriate these offerings. In the case of the hunting offering, he will run round the tree, saying, "I am a hyaena, the spirits will not mind me," and will then take part of the flesh-offering and eat it. 782 224

In the same way, a *mbilo* may drink from a grave beer-pot after three days, when the spirits are supposed to have taken what they want.

With the exception of the *maoro* tree above mentioned (*ndima*, Chin.), and possibly another called *nsilo-ngoma* (Chin.), which is never used as firewood and which is supposed to be used by *nanai*, I do not think there are any sacred trees properly so-called. Miss Werner supposes that many of the big trees (often a species of *Ficus*) in villages are sacred.[2] The truth is, I believe, simply that a village is made naturally round a big tree which conveniently offers its shade for the village meeting place. The spirits of deceased chiefs may 824 778

[1] Vide supra, p. 297.

[2] The natives of British Central Africa, op. cit., p. 62.

7: Hetherwick M-5 (ca. 1900) 1902 FT7 Yao FT7

Unkulunkulu, which may therefore be rendered as "The old, old One," or "The great, great One." A like rendering may be given of the Yao form *mulungu*, the "Old One," or the "Great One." In this or a modified form *mungu* (Swahili) it appears in all the Eastern group of the Bantu tongues as the equivalent for "God" (see Father Torrend's *Comparative Grammar of South African Bantu Languages*). To trace it as Father Torrend does to any connection with Moloch, the god of the Phœnicians, is to attach undue weight to a chance coincidence of sounds.

As we have already seen, the word *mulungu* is applied to the human *lisoka* when regarded as an object of worship, or as an inhabitant of the spirit world. But it is also used to denote that spirit world in general, or more properly speaking, the *aggregate of the spirits of all the dead*. The plural form of the word is rarely heard, unless when the allusion is made to the souls in their individualities. In its native use and form the word does not imply personality, for it does not belong to the personal class of nouns. Etymologically it is classed with the leg, heart, arm, head, etc., of the human frame. Its form denotes rather a state or property inhering in something, as the life or health inheres in the body. Among the various tribes where the word is in use as we have described, the missionaries have adopted it as the term for "God." But the untaught Yao refuses to assign to it any idea of being or personality. It is to him more a quality or faculty of the human nature whose signification he has extended so as to embrace the whole spirit world. Once after I had endeavoured to impress an old Yao headman with the personality of the Godhead in the Christian sense of the term, using the term *Mulungu*, my listener began to talk of "Che Mulungu," "Mr. God," showing that originally to him the word conveyed no idea of the personality I was ascribing to it.

And yet the Yao approaches closely to the idea of personality and a personal being, when he speaks of what *mulungu* has done and is doing. It is *mulungu* who made the world, and man, and animals. Far in the interior of the continent, toward the north-west, beyond the plains and swamps of the Loangwa River and Lake Bangweolo, there lies, in Yao legend, an island in the midst of a lake called Kapiritimya. On that island there is to be seen a large flat rock marked by the footprints of men and animals of all kinds. When that rock was once a heap of moist clay, *mulungu* created all living things and sent them across the soft mass, where their footprints remained to be afterwards hardened into the imperishable rock. Such is the Yao legend of the creation of the world, and *mulungu* is always the Great Creator.

Mulungu is also regarded as the agent in anything mysterious. "It's *mulungu*," is the Yao exclamation on being shown anything that is beyond the range of his understanding. The rainbow is always "*mulungu*," although some Yaos have begun to use the Mang'anja term "uta wa Lesa," bow of Lesa.

Offerings are made to the spirit world or to *mulungu* as the great agency in the affairs of human life. Outside the village, or beside the headman's hut, may often be seen a rough shed. In this are placed the first-fruits of the new crop,

7: Hetherwick M-5 (ca.1900) 1902 FT7 Yao FT7

green maize, beans, pumpkins, peas, etc., as a thankoffering from the villagers for their harvest. This is described as *kulomba mulungu*, to worship *mulungu*. At the foot of the tree in the village courtyard, where the men sit and talk or work, an occasional small offering of flour or beer is placed on any special occasion in the life of the village or any of its inhabitants. This also is *kulomba mulungu*. A devout native sitting down to a meal will, before beginning to eat, take out a small morsel of the food before him and throw it at the root of the nearest tree as an offering to *mulungu*. On a journey a traveller will sometimes stop and lay a little flour in a pyramidal heap at the foot of a tree by the wayside or at an angle where two roads meet. This, like the others, is for *mulungu*, the spirit world, the guardian of the wayfarer on his journey.

Thus the Yao presents us with three stages of animistic belief :—

(1) The human *liseka* or shade, the agent in dreams, delirium, etc.

(2) This *liseka* regarded as *mulungu*, and an object of worship and reverence, the controller of the affairs of this life, the active agent in the fortunes of the human race.

(3) And lastly, *mulungu* as expressing the great spirit agency, the creator of the world and all life, the source of all things animate and inanimate.

And yet between these three conceptions of the spirit nature no definite boundary line can be drawn. The distinction in the native mind is ever of the haziest. No one will give you a dogmatic statement of his belief on such points.

It is only through long association with them in their daily life noting actual expressions of opinion or hearing of definite acts in relation to their worship or their dead, that one can get behind the reserve with which every Yao man or woman approaches or alludes to the spirit world which lies beyond and after this.

II. The Political Structure
BEFORE THE WHITES CAME

173 (*kuhamula ukongolo*), i.e. to surrender to the chief
643 in the area. Also the chief sent out expeditions
167 to capture slaves or he purchased slaves with the cloth and beads he had exchanged for ivory at the East coast.

643 Within his territory certain privileges and rights
421 were held by the chief and he had certain religious duties to perform in which the unity of the people in the territory was expressed. In general the chief had rights over any ivory either found or hunted in his territory. If a dead elephant were found the tusks belonged to the chief, though he usually rewarded the finder with cloth. If a man killed an elephant the tusk that lay on
[224] the ground belonged to the chief while the other belonged to the killer. The killer's tusk was in-
[439] cluded in the chief's caravan to the coast and its value paid in cloth to the killer when the caravan returned.

643 The chief was also entitled to an annual tribute
651 of food and beer from all villages in his area, but this was used to entertain visitors who came to the court-village.

643 The chief's religious duties lay mainly in
782 propitiating the spirits of his ancestors on occasions when the community at large, in contrast to the chief's own private affairs, was either threatened or directly affected. The most obvious occasion was immediately before the rains came when flour was poured on the tree shrine and the spirits of the ancestors asked for good rains. Later when the rains were over a similar sacrifice was made asking for a good harvest. Sacrifices to the ancestors were also made on two other public occasions. They were made when some calamity had occurred or was believed to be impending. A run of unsuccessful campaigns induced Cingwalugwalu, a son of the Yao chief Mponda near Fort Johnston, to ask his father's father's brother to make sacri-

643 782 fice to the ancestors. The other public occasion was at initiation ceremonies. A successful initiation, i.e. one in which the initiates were not beset by misfortune, depended upon the goodwill of the ancestors of the chief. Initiates therefore gathered at the chief's court-village before the initiation, when the sanction of the spirits was asked and the initiates severally blessed. After this they scattered to the bush-schools near their villages only to return when initiation was completed and the chief received them into tribal society.

643 769 The people who had submitted themselves, willingly or unwillingly, to the rule of a chief, in turn expected certain services from him. He provided them, as we saw, with mystical protection through his ancestors. On a more pragmatic plane he was able to arm and co-ordinate military forces thereby giving his people protection from attack. Within his area of rule he was a common person of final appeal in the regulation of relationships of his subjects.

In these various ways, by propitiating his ancestor's spirits on behalf of his subjects, by settling differences between subjects, by co-ordinating defence and in fact by being a unique personality in the area, the chief became the symbol of unity of his tribal group. The symbolism was clearly noticeable on the death of a chief when a short period of social disorganization called *cipinimbe* followed. The members of the chief's village were allowed to pillage and to commit rape and other criminal acts without suffering legal action. The demise of the symbol of unity was followed by a period of disunity before the appointment of successor restored the *status quo*.

622 [769] At the same time much of what has been said about the chief was true also of important village headmen. Village headmen also made sacrifices to their ancestors but only in domestic or village affairs. They too built up their prestige by slaving. Many villages in Southern Nyasaland to-day

11: Sanderson D-5 (ca. 1920) 1920 FT7 Yao FT7

The alternative term, *wese*, common to nearly all Bantu languages, is usually reserved for "own father," but not always. 601

Latterly, though the relationship is really *akwaye*, the husbands of a man's "daughters" or "grand-daughters" are called *atati* -in a complimentary sense, not of course in defining relationship.

The word *akwaye* is rapidly falling into desuetude for men, and is, nowadays, never used in speaking to a man of that relationship, though used freely as a mode of address to women.

Amao (or *achikulu-wangu*, *-wao*, etc., "my, his mother") may be further defined as "great" or "little" in the same manner as *atati*.

The parents of any *atati* or *amao*, and those of one's wife are called *ambuje* ("grandparent"). Great-grandparents are specified as "father" or "mother of my grandfather (or mother)."

The founder of a family is called *Likolo*, especially in prayer—except for the augmentative prefix obviously the same word as *Nanyolo*, "a parent," which includes all "fathers" and "mothers." [782]

It is curious in this connection that a name for little girls in general, if one does not know their real name, is *chikolo*. All these words seem to be derived from *-hola* ("have," "possess"), and refer, probably, either to actual or potential possession of offspring.

Achinangolo are distinguished as "male" or "female" according as they belong to the father's or mother's side—irrespective of their own sex.

Conclusions.—The Yao nomenclature of relationships, bearing as it does the evidence of former group marriages, is, like other classificatory systems, gradually changing in conformity with the development of the race, so that it can be used to express consanguinity; Rivers has, I believe, called attention to this process. 601 178 [121]

The Yao custom—now dying out—of lending one's wife to a visitor (usually a close friend) may be a remnant of ideas carried on from communal marriage, though such a privilege is never given to a relative. [839] [504]

In the same way a man who has had no children (a great stigma) may request his friend to help him - he will never ask a relative and all of the three parties will keep the secret of the true paternity of any children resulting. [839] [840]

In many tribes the marriage of brother and sister, or a man with his sister's child, is permitted to compensate for the law by which a man's property goes to the son of a stranger, but nothing of the kind is allowed among the Yaos. Indeed, they view any incestuous union with particular horror, and such must be very rare. I have heard of a case of a man committing incest with the idea that he would thereby become endued with supernatural power, but all he gained was ostracism; in the old days he would have been burned. 588 835 [24]

2: Mitchell E-5 (1946-1949) 1956 FT7 Yao FT7

strike out with his adherents to found a new village. A sum of £6 or £7 is a considerable amount in everyday Yao life where the annual cash income of the average individual is not much more. The leader of a dissident group is prepared to forgo this wealth to get one foot on to the lowest rung of the political ladder—that is by becoming a village headman. 621 166 627

Obversely there is a great deal of sentiment attached to the idea of a united village. To the Yao way of thinking a village is broken by fighting or death, and these evils are linked by witchcraft beliefs. The association of death and the break-up of the village is brought out clearly by the funeral ablutions of villagers after the burial of one of their number. An important ingredient in the medicine with which the mourners wash themselves after the funeral, is *cikula*. It is the earth from a particular type of termitary which is usually about 12 to 18 inches high, upright and almost cylindrical. The crust is very brittle and it is comparatively easy to chip off a piece. When this is done a mass of internal chambers and passages is revealed. The soldier ants, unlike those of other species that retreat into the darkness of their passages as soon as they are exposed, come into the open daylight and swarm in confusion over the fractured termitary. When I questioned my informant about *cikula*, he kicked the crust off the top of one of the hills and said, 'See all the houses in the village of the ants? I have broken their village. So it is with death. It breaks the village.' 621 764 783 825

The Yao believe that death 'breaks the village' and that conflicts through sorcery lead to death. Therefore, conflicts are the real cause of village splits. Hence differences must be settled immediately if the village is to persist, because if they last too long one of the aggrieved parties is sure to start using sorcery against its opponents. Those who do move away, go to a distant place because they believe that sorcery operates only where there is social interaction. But the fear of sorcery on the other hand is just as strong a force in maintaining the physical unity of the village. It is while the migration is being planned that sorcery is most likely to be used. This is particularly so if the village break is taking the form of a lineage split. This happened, for example, in Lupunje village. 621 754 626

Kalambo, the sister's son of Lupunje, wanted to leave the village and had gone to seek a suitable site. When he returned he found that 621 626 753

3: Stannus D-5 (ca. 1912) 1922 FT7 Yao FT7

764

toward the east. After adjusting the body in its place, the *ambile* would tear open the shroud over the ear, and pour on to the plans some powdered beads to be used by the dead man as money in the hereafter. Except in the case of chiefs, no objects were buried with the dead, contrary to Macdonald's description[1] of the Amangoche. The pole on which the body had been carried to the grave was broken into bits and together with any stick that had been used to measure the body for the cave, was placed in the grave. The opening into the chamber was then closed by a mat fastened over it by pegs and supported by pieces of wood. The *ambile* clambering out of the well, pushed the first earth backward into the grave with their elbows, after which the rest of the earth was shovelled in quickly, and a heap made at the surface. The ground about this mound was swept clean with a bunch of leaves by some one walking backward so that no footprints were left; the bunch of leaves was thrown on top of the mound. No medicine was put in the grave, nor were the household utensils placed on the mound, as Macdonald states concerning the Amangoche.[2]

[114]

[114]

For some years past, the type of grave made among the Yao has resembled that of the Anyanja,[3] a long pit with a chamber scooped out along the whole length of one side. In this, the corpse is placed in a fully extended position so that it lies on its back with the feet toward the east. With this exception, the account given above holds good for the present day. The method of suspending the corpse in a mat slung on forked sticks within the grave, mentioned in *Africana*,[4] is not found among the Amachinga Yao.

764

On the way back to the village, two *ambile* lead, followed by the men, the women, and lastly, by the other *ambile*. First, all wash, the men upstream, the women downstream; no one may wash another's back. The hoes used in digging the grave are also washed; hoes are never washed on any other occasion.

783

During the funeral, some responsible old man is left in charge of the village with several younger men to assist him. Just before the return of the funeral party is expected, the old man sends one of the younger men to set medicine at the side of the path along which the mourners will pass. This medicine is made from the bark of the *mpingo* tree and is used for purification; it is placed in a sherd. Each person as he arrives at the spot squats down, dips the little finger of each hand into the medicine, and passes the fingers between the little toe and the third toe of the corresponding foot. The last comer throws any remaining medicine into the bush. As they near the village, a gun is fired and wailing is resumed for a few minutes, after which it ceases altogether. The old man who has been left in charge of the village always inquires whether all has gone well at the interment.

[824]

That evening, the time is passed in singing *chindimba*.[5] All those who attended the burial, sleep in the village, and if the deceased's relatives can afford to provide the necessary food, all remain in the village for a number of days equal to the period which elapsed between death and burial. Sometimes, when burial was long delayed, the mourning party

765

[1] Op. cit., vol. 1, p. 107.
[2] Ibid.
[3] Stannus, 'Notes on natives of British Central Africa,' op. cit., p. 313.
[4] Macdonald, op. cit., p. 108.
[5] Vide infra, p. 367, 370.

3: Stannus D-5 (ca. 1912) 1922 FT7 Yao FT7

30 that she is tattooed more profusely on the buttocks and legs. The circlet of beads was
[548] formerly made like *mapunda* with a bark-cloth core, called *mtumbo* or *mbula* (*ku-ula*, to slip off), referring to the *mbula* being slipped off over the legs. The fashion now is to wear single strings of beads; each string is of one color but all the strings are different and perhaps number a dozen or more.

Lipamba: a bead belt three-inches wide, worn by Yao women near Lake Nyasa. A bead apron, *kacjera*, is also worn by them but not near Zomba (Pl. VI, fig. 2).

[783] A woman removes her beads when she is "unclean," that is: (a) during the menstrual period, (b) during the period of mourning for a near relative when coitus is forbidden, (c) before the birth of a child and afterwards until such time as she may resume intercourse with her husband.

A large variety of beads has long been used by the Yao. There are some rarely seen
[172] now which were much prised in years gone by, while others are of quite recent introduction. There is no evidence that they themselves made beads and there are few which are probably not of European manufacture.

Clothing. The Yao used bark-cloth before the introduction of woven materials. The
291 older people may still be seen in it and it is used in most of the ceremonies. At one time, they also used to weave a cloth called *likamambo* from a native cotton plant. This has been given up since the introduction of imported materials.

For the method of wearing cloth, see Pl. II, fig. 2. The very poorest people wear only a strip of calico round the pudenda, held in position by a string round the waist hanging long behind and in front; this is called *mthetha*. Yao women, when menstruating, wear
[841] under this a little piece of cloth called *likumbi;* it is only worn at this time and not always as in certain other tribes.

Warfare. Fighting has naturally played a large part in the life of the Yao as among
721 other African tribes, but at no time were these people a trained fighting race. Warfare was of a desultory character consisting mostly of raids by one feudal chief upon another. A party of men belonging to a chief at enmity with another, meeting some of his followers would challenge them, "*Alumbe*, who are you for?" The name of the rival chief in answer
726 was the sign for battle to begin. A fake answer would never be given to gain an advantage. When about to throw a spear, the thrower calls to his adversary.

The Yao have possessed guns for a long time. Going out to fight, the Yao used to
[177] leap from one foot to the other, and spin their guns around in their hands. They made their own stocks for the rifles. They also used to make a small, cast-iron cannon about three feet long, called *kambula*, "a little nose." It was carried in the arms and was touched off by a torch. Drums called *sonjo* were taken into battle. There is an old war drum
[534] at Malemya's village, taken in 1895 by the old Malemya from a Mang'anja chief called Mkulumbo who lived near Lake Chiuta. Since then, this drum has always gone into battle with Malemya. Around it his men would dance and anyone who had killed a man in battle would run up to it and spit upon it in salutation.

ndwalo, a woman who is pregnant for the first time;[1] *kacwabwe*, a woman who has one or two children; *mjembere*, a woman who has three or four children, and lastly, *ndolwa*, a woman who is past child-bearing age. 554 584

The information which I have been able to collect on abortifacients and contraceptives suggests that they are not used by married people merely to prevent their having more children, but that they are used by people who wish to avoid pregnancies which would be embarrassing, for example, by a woman whose husband is a labour migrant. To what extent the abortifacients and contraceptives are efficacious I cannot say; some, I know for certain, rely on a magical principle, for example, the medicated cord worn by a man during intercourse. On the other hand, the abortifacients taken orally may have some active ingredient. 842

A barren woman or an impotent man is regarded with some embarrassment and the marriage sureties (*arinamangorwe*) of a childless couple will go to considerable trouble and expense consulting diviners and leeches in an attempt to make their wards productive. Childless couples are regarded as not fully adult and are treated in a patronizing way by those who have borne children. Since a man may marry other wives, barrenness in a woman is a cause of sorrow to her husband, but is not in itself a ground for divorce. Where the man is impotent, however, the woman may divorce him on this ground, though she usually takes a paramour and forces her husband to an action for damages which automatically leads to a divorce because it is the usual practice in these cases for the court to ask the woman if she wants to be divorced from her husband. [885] [554] [586] [837] [694]

In contrast to the satisfaction shown at the birth of a child is the sense of awe evinced when a child is still-born or the woman miscarries. The Yao do not distinguish between still-births and abortions, both events being known by the word *kwasanga*. This is a verb and refers to the process of abortion; there is no term for the dead foetus itself. I made no attempt to enumerate miscarriages and still-births because they are supposed to be due to breaches of sexual taboos on the part of the husband and wife, and interviewees were naturally reluctant to mention them. Miscarriages and still-births are greatly feared, and the woman is considered to be in a very dangerous condition until she and her husband have carried out a ritual purification. Should a man have intercourse with a woman who has miscarried and not yet been purified he will contract a disease called *lwaso* which is believed to be invariably fatal. Still-born children or aborted foetuses are buried in a hole dug with sharpened sticks in the bush by the women, whereas children who are born alive and die afterwards are buried in the graveyard in graves dug by men with hoes. The burial spots of still-born babies or aborted foetuses are marked with a stone or broken pottery, since it is believed that to step on them will induce an illness. 845 [783] [753] [766]

The concern of the interested kin-groups is shown in the child-birth procedure. Birth normally takes place in a hut in the presence of the older female relatives of the woman and the female representatives of the man. The husband's representatives are necessary because the Yao, like many other Central African peoples, believe that an adulterine child will not be born to the woman unless she confesses (*kupaca*) the name of the genitor. If she persists in concealing the identity of the genitor, they 844

[1] *ndwalo* — elephant, hence ivory. The terms *lilibo* and *ndwalo* here both refer to the ivory beads traditionally worn by the woman in the pregnancy initiation ceremony. [192] [361]

10: Sanderson D-5 (ca. 1920)1922 FT7 Yao FT7

796 THE WHOLE VILLAGE IS THOROUGHLY 'SPRING CLEANED', ALL RUBBISH
[364] is swept up, the ground round the houses is hoed clean, and the interiors remudded. Ceremonial beer is brewed by the head-wife of the chief, and after this has been drunk the ashes of the fire used in the brewing are carefully collected and taken to a *malebano* ("cross-roads," or "diverging of paths") where they are deposited.
[783] The chief, as representative of his people, bathes in special medicated water, a
[624] decoction made from the bark of *ng'ungu* and *mbawa*, and the root of *mpingo*.
[621] This completes the ordinary annual ceremony, at which new fire is not made.

On certain special occasions a more elaborate ritual is carried out; such occasions are the death of a chief, a threatened epidemic of infectious disease, a murder (especially by shooting) and the frequent occurrence of quarrels in the village.

In such circumstances, in addition to the ordinary *pyajila* ceremony described above, the porridge sticks of the whole village are renewed and all fires extinguished. The discarded sticks and all ashes of the old fires are carried to the meeting of paths, where the former are stuck upright in the ground and the ashes piled together;
[372] this is done in procession, all the people taking part. On their return to the village new fire is made by friction by either the chief or his younger brother—usually the latter; fire procured in any other way would nullify the proceedings. Finally
[783] all the people bathe in the medicated water used only by the chief at the ordinary ceremony.

751 In addition to this special form of the *pyajila* ceremony, another rite is sometimes
796 performed after the occurrence of a murder or as prophylactic against the spread of epidemic disease. The doctor first makes a kind of trough (*lukwagwa*) from the bark of *mtondorobo* or *mpapa*, and procures a *chichiliko* (or *chipengule*) basket—used as a strainer in salt-making. Having collected his medicines he proceeds to the bank of the stream near the usual bathing-place of the village and digs a shallow hole, in which he places the basket; in this he puts the leaves of a certain thorny shrub and covers the whole with the trough, which is banked up with earth so as to be perfectly firm. He then puts his "medicines" into the trough; these are, first, the head of an iron hammer and a piece of slag, both from a smelting furnace. On top of these he puts pieces of the root of a certain tree which has many and particularly sharp thorns, and bits of bark from two trees peculiar for having very straight stems. Having distributed these evenly along the floor of the trough, he fills it with water and then proceeds to construct an arch over the end of the trough furthest from the stream. Two long poles, cut from a kind of tree particularly rich in sap, are planted in the ground, one at each side of the trough and close to it; these are bent over towards each other, and fastened together by means of a strip of their own bark. A bamboo is now planted alongside each, and similarly tied to its fellow. During all these preparations and throughout the ceremony it is essential that the doctor has no knots in any part of his clothing.

The preparations are now complete, and when all the fires in the village have been extinguished the people go in procession to the spot where the doctor awaits them. All must be poorly clad and must have no metal about them.

[622] The chief opens the ceremony. He steps into the trough and taking some of the medicated water therefrom in his hands he rinses his mouth with it. He then
[769] offers a prayer to the spirits of his ancestors, first stating the emergency and detailing the measures which are to be taken to deal with it (new fires, sweeping, discard of porridge-sticks and shaving). The prayer over, he splashes the water in the trough over his body and passes through the arch, first throwing some gift (beads or, in more modern times, money) into the trough. These gifts, presumably
[756] intended as an offering to the spirits, are the perquisites of the doctor, and everybody is supposed to contribute in turn.

10: Sanderson D-5 (ca. 1920)1922 FT7 Yao FT7

The man and boys now pass through the arch in order of seniority; each splashes himself with the water in the trough, but neither speaks nor rinses the mouth. The women come next, led by the head-wife of the chief; the latter rinses her mouth and, instructed by the doctor, repeats a prayer similar to that offered by her husband. The remainder of the women merely splash themselves, like the men, before passing through the arch. All then return to the village, where the *pyajila* is continued. 751 796

Finally the doctor takes the hammer-head from the trough and hands it to the chief, who refits the haft into it, and, a hoe having been placed on the ground, goes through the form of forging the latter by beating it with the hammer. He then scrapes the ground with the hoe as if clearing a place overgrown with grass; he does not dig with it as in hoeing up the ground for planting seed. After this rite the chief again bathes in medicated water similar to that in the trough, and the ceremony is complete.

Whereas the *pyajila* ceremony and its adjunct, the rite of the arch, are now but rarely performed, no Yao will omit the rite of purification after a death in his family. This ceremony consists of two essential parts, both protective against the *ndaku*, a disease characterised by dropsy and supposed to be contracted by contact with a corpse, or by association, especially by sharing a meal, with those who have been in such contact. The first of these parts is bathing in certain medicines, which protects the bather from *ndaku*, and the second consists of a sort of communion meal, shared by all friends and especially relatives with those who have been contaminated, and designed to protect those friends and relatives. [178] 751 764 796 783

The decoction for bathing is made by soaking the roots of *lugwalambuti* and *lumlemela* in water, together with the bark of *mkomwa*, one piece each from the east and west aspects of the tree; the water assumes a reddish tint, and the whole body is bathed. 751 783 824 765

The communion meal consists of porridge made from any kind of flour or of rice, and some *ngunde* beans. In the latter some scorched and powdered root of *mandanyelele* is mixed, with a little salt. All near relatives of the deceased must partake of this meal, as well as their wives and their near relatives; part is carefully put aside for the use of any relative unable to be present at the ceremony. [262]

Latterly, since the spread of Islam among the WaYao, this rite has become confused with the distribution of food to the poor at the funeral of a Muslim, and the Arabic word *sadaqa* ("charity") is now generally used for it, to the exclusion of its wider, correct meaning. [777] [797]

It may be mentioned here that after the death of a child the father is denied access to his wife for a period of about three weeks, and the first act must be one of *coitus interruptus*. 765 784

MEREDITH SANDERSON.

2: Mitchell E-5 (1946-1949) 1956 FT7 Yao FT7

Nyambi's formal permission to install the heir as Cimombo. Nyambi told them to start preparing malt for the 'beer of succession' and to tell him when it was ready. Kaukutu then sent a man to Cholo on a bicycle to call Cimombo back to the village. One Tuesday, the day after Cimombo returned, Kaukutu reported to Nyambi, who told him to tell the women to prepare the beer, since the installation ceremony would take place on Saturday. Nyambi sent his perpetual sons Makoka and Ncimba to officiate on his behalf. These two men were important village headmen, Makoka having the right to wear a scarlet headband though Ncimba had not.

On Thursday, Makoka and Ncimbo came to a place about three miles from the village. They had four women with them, one of whom carried a sacred basket (*ciselo cambepesi*). Ncimbo sent a message to Kaukutu to say that they were waiting, and he told the heir that he was wanted along the road where a meeting was being held. When the women saw Kaukutu and the heir coming to the place where Makoka and Ncimbo were waiting, they ran to hide in the bush. The heir sat down under a mango tree and Makoka went up to him and begged for some snuff. Before he had time to take the snuff bottle out of his pocket, the women came out of the bush, Makoka got up and struck the heir on the forehead with his fist, knocking him to the ground, took some flour from the sacrifice basket and sprinkled it on the heir, shouting, 'This is Cimombo—he is risen from the dead!'[1] They put him in a hammock and carried him back to his hut in the village amidst wild exultation. They put him on his bed and made him stay there. Later, Mkoka and Ncimbo came in and started to deliver a series of homilies on his position as village headman.[2] They pointed out that from that day he was a chief (*mwenye*), a headman who had the right to wear a scarlet headband (*acimweni shambendera*). Thenceforth, he was not to go to funerals, or at least not into the hut in which a corpse was lying. If his child were to die while he was in the hut he must not move until other people had come in. It was only when a headman of similar rank died that he might go into the hut. They advised him particularly that he would have to look after his village and told him that he should

[1] *Ce Cimombo ahwile—afimwie kufuile.*
[2] *Kumula mityango*—to teach the customs.

3:Stanmus D-5 (ca. 1912) 1922 FT7 Yao FT7

Thagalage was another well-known performer; he used to do the same tricks as Kambanje. He also was possessed of an elastic skin and is said to have been able "to tie his ears together behind the back of his head." 789 791

Mpachetula, a Yao of Mkanda, is a man with considerable renown. He is said to be able to produce a lion at will from a lion's tail and claw. He would offer to show this if there were any brave enough to go through with it. On a moonlight night, he would expose on the ground in a cleared space near a village the tail of a lion held cross-wise in a piece of split bamboo. At the split end of the bamboo, he would place a lion's claw and round this, a woman's belt held in position by three bamboo pegs, around which he would draw a circle of mkapasi flour. Everyone would then withdraw to a hut in which the seance was to take place. After an hour or so, Mpachetula would send some one out to inspect the lion's tail where probably all would be found intact. He might then pretend to be uninterested and sleepy and suggest that some one should go out again in half an hour. Sooner or later, a man would come back, having found the tail gone; then everyone would go out to see what had happened. The pegs would be found in place but the tail and claw gone. A little way off, the split piece of bamboo would be found and further still a bead or two from the woman's belt. These, Mpachetula would pick up, and leaving a little trail of flour on their way, all returned to the hut, while he whistled as if calling some one. Suddenly they would be aroused by the sound as of a lion brushing against the hut walls, as the beasts are known to do, and next, a loud roar. Mpachetula would immediately open the door half-way so that the people could look out into the moonlight and there, a little way off, would be the lion. It would immediately advance towards the house and then, as it prepared to spring for the door, Mpachetula would offer it some of the flour in his left hand, armed with a stirring-stick, while, in his right hand. As the lion landed, he would strike it on the head with the stick and lo and behold! the lion would vanish and the tail and claw would be found in his hand.

Superstitions. Scattered throughout these notes, particularly under *Uwusi* and *Diwasa*, mention is made of practices which show a strong belief in superstition. Below are given a number of minor beliefs, and it is interesting to compare them with many well-known superstitions in other parts of the world. 771 784

1. A child who cuts the upper incisor teeth first will be unlucky. Such children used to be killed by the Yao. (Other tribes make medicine against the threatened ill-luck.) [777]

2. A woman with polydactylism may not take food out of a corn-store. Otherwise the stock of corn will not last long. (Rudimentary sixth fingers are not uncommon.) [732]

3. An insect called *chinyoo* *wusi* which lives in the mud at the bottom of pools, if killed causes the water to dry up. [823]

4. If a boy puts a water-spider in the armpit when learning to swim, he will learn quickly.

5. A man wishing to prevent rain falling on a day he is making a journey, will wrap some of the leaves of the *mkwawi* tree in his bale cloth and go without detaining. [824]

3:Stanner D-5 (ca. 1912) 1922 FT7 Yao FT7

771 6. It is believed that signs of guilt are visible in the eye of a murderer; medicine is prescribed in the hope of getting rid of these signs.

●784 7. The possession of the hair of another person is supposed to give the possessor power over that person, hence a medicine man, when the patient he has been treating is cured, shaves the patient and keeps the hair until payment is made.

[826] 8. A native with light greenish-grey eyes is not to be trusted. He is said to have eyes like a cat and is called *major(jor)*; these eyes are rare among natives.

9. It is unlucky for a child to get into a basket; he may be burned.

10. Should a woman turn the porridge pot upside down, every one who has eaten will become constipated. For the same reason, a woman, after turning out the porridge from the pot, just touches the top of the mass of porridge with the bottom of the pot.

11. A woman will never leave the pounding stick in the grain-mortar. Should she do so, the heavens would fall.

12. When a zebra is killed, a knot is tied in its tail so that eating of the meat shall not cause indigestion.

13. It is unlucky to sit upon a headrest, the *mawili*. The person would surely be bitten by a snake.

[843] 14. If a man commits murder, and his wife is pregnant at the time, she must sleep on the spear used.

15. Children are told that they must not eat at night; that if they are hungry, they must lie quiet and try to go to sleep again. If they don't obey and sit up eating porridge, a long hairy arm will come through the fastened door and beg for some, the voice of the unseen saying:

[539]

> "*Ngwe chimbuti'chemi ssupa ni mjomi*"
> "Give me that which you put to your nose to smell and throw away,"

the repeated movements of the hand to the mouth (nose) and back to the pot being supposed to make the "bogey" think that they are not really eating but merely smelling and throwing away the food.

16. A male should not scrape the porridge off the porridge stick; this is only allowed to the woman. Should a man do so, it is supposed that when he goes hunting, he will hit anything he shoots at, only in the tail.

17. There is a saying that the men and boys may eat little pieces of porridge which fall out of the pot, while cooking, on to the supporting stones and it will give them power to escape unhurt from battle. The fragments are called *ngulupulu*, (from *ku-lupulu* "to escape").

18. Children are instructed to take their food sitting down instead of being in a hurry and standing to take it. They are told that if they do not obey, their porridge will not go into their stomachs but into their legs and swell out their knee-joints.

3:Stanmus D-5 (ca. 1912) 1922 FT7 Yao FT7

19. That portion of the gut of animals having folds of mucus membrane inside, may be eaten only by old people past the child-propagating age. If a young woman should eat it, she would have difficulty in labor. 771 784 DLa

20. It is believed that people who eat too freely of a little fish like whitebait called matumba get obstruction of the bowel by the wedging together of the bones. The treatment adopted is to pass up the rectum a smooth stick with a pad of rag at the end. This cannot be done by the person himself and so the aid of another has to be called in; only an intimacy, such as the relationship of brother-in-law gives, will warrant this service being asked.

21. The Yao believe that there is a little insect which lives in the ear, called *chiyeyu lipihumlo*, which tells the person what is said to him, the wax in the ear being its excrement. The pupil is called *mwanache jwa lisu*, the child of the eye. [826]

22. Among women, the uterus is called nemeso (*meso* = eyes); it is supposed to be a little person who holds the foetus. When the child is born, nemeso cannot find it and starts looking about, the movements causing the afterpains.

23. A man making his first journey to the coast used to sprinkle himself with water from every stream he crossed to give him a *safe* journey. In the same way, women at the present day going between Zomba and Blantyre sprinkle their babies with water from each stream. [484]

24. An ant-like insect called *ndwyatumbe* (*lumbutumbu*, Chin.) [*dasylabris rufipilis*] is lucky. On seeing it a native pats its belly and then rubs his own, wishing for plenty of food that day. If he is embarking on a journey or beginning some enterprise, he will wrap one of these insects in a fold of his loin cloth and take it with him for luck. [825]

25. When a native hears the *mwipe* bird call (its call is like the mew of a cat), if he wants something, he immediately says, "Oh *mwipe*, I want so-and-so. Be quiet and I will then be quiet, too!" If the bird ceases calling, he knows the wish will be granted. The female bird is said to be the more certain prophet.

26. The snake, *nabulubuti*, which lives in trees and is of a buff clay color with green markings, is said by natives to pierce the chest and tie a knot in itself on each side so that it can only be withdrawn by cutting off one knot. When the snake is thus withdrawn, its blood mixes with that of the man and he will die.

27. Natives have a habit of marking the spot where any event takes place by a stone by the side of the path, and every passer-by will add a stone for luck. In this way some large piles of stones have been made. [777]

28. A man resting on his way home from a long journey places a stone in the fork between the branches of a nearby tree, so that on his arrival he may find his wife has put by some food for him and has not used up the day's stock of flour.

29. A chameleon found digging in the path is said to presage the death of the finder's nearest relative. [789]

3:Stanmus D-5 (ca. 1912) 1922 FT7 Yao FT7

771 784

30. If a chameleon is found holding on to the grass at both sides of the path, the path is "closed" and a man will turn back to his home and not proceed on his journey. It would be unlucky to continue.

787 771 784

31. Snakes seen in coils are a bad omen.

32. The slow-worm known as *Ikumbula mangulu* ("the cutter open of ant hills"), and the only anteater, if seen on the path, are of bad import.

33. To knock the toes against a stone on a journey is bad luck; if blood flows from the big toe, it points to good luck.

34. A man knocking the sole of his foot against a stone knows that some one is speaking ill of him.

35. A person whose hands itch knows he will receive a present.

36. Tremor of the circumorbital muscles of the right eye indicates that something good will be seen. When the left eye is affected, the outcome is less sure.

37. The cry of the bird *ngulubulu* (the green turaco), indicates to the hearer that he is about to meet some one, either friend or enemy.

771 784 825

38. Anyone who kills one of the large stick-insects (*Phasmidae*) known as *chikase chiwiya*, will always be breaking the cooking pots afterwards.

39. The natives believe that the caterpillar of the *Hippotion osiris* moth will jump at the breast. It is called *chirumbila mumulu*, "that which jumps at the breasts," and children seeing it will cover up their nipples with their hands.

40. Of *Linulu*, the Mongoose, there is a saying:

[539]

"*Linulu gapachilanpuse ukilal*"
"The banded mongooses relieve each other (at) the rascal"

It is said that mongooses assist one another when being hunted. When one is tired, a fresh one runs in so close to the pursuer that he goes after this one and leaves the tired one, and so they keep it up till the pursuer is exhausted.

41. *Chiula*, the frog. Children are told they must never kill a frog, or its spirit will come at night with porridge made of excrement and make them eat it. If a small child playing with a frog kills it by mischance, he will tear off a small piece of his calico cloth and place it by the frog as an offering.

42. *Chindindi* (*Ikwapuse*, Chin.) the weasel. It is said that the weasel hides its body and leaves exposed its anus, so that a chicken seeing it, goes up to peck at it, whereupon the weasel turns round quickly and catches the chicken with its mouth.

43. *Chingwe*, the skunk (from *kwapa*, to go to stool), so named on account of its odor, is said to apply the anus to a rat-hole and make wind. This will render insensible all the rats in the burrow and he can then dig them out at leisure.

44. *Mbuli*, the honey badger, when hunted is always said to attack a man by attempting to seize the testicles. Natives when they hunt this animal, tie stones in their loin cloths so that they hang down between the legs to defeat the badger.

3:Stannus D-5 (ca. 1912) 1922 FT7 Yao FT7

 771 784 826 539

45. A child, when one of its milk teeth drops out, stands some five yards away facing the door of the hut and throws the tooth over the roof of the hut, saying:

"Al lilumpulo lilo lyenu ulye, mbumi lyangu lyambuse 'lya!"
"Oh! over tooth your there is, give me my of good one!"

Religion. The matter of the religious beliefs professed by natives of East Central Africa is one beset with many difficulties to the student of today. It has been the subject of many essays by workers in the missionary field, but the wide contact of the natives of Nyasaland with missionary effort during the past thirty years has done much to confuse the problem, and one feels that many missionaries in their writings rather color the picture with their own feelings. 771

I think probably the Yao with whom I am now concerned have a truer conception of their own beliefs than many of the subject tribes among whom mission teaching has more easily taken root. The religious beliefs of a people are to a large extent the reflection of the circumstances under which that people lives. The outstanding event to all natives is death. At death, something is lost to the body, without which life is impossible. This is the *mzimu* which may be translated "soul" or "spirit." The *mzimu* is said to leave the body of the dying man when he becomes moribund or unconscious. It appears that this same *mzimu* may leave the body during unconscious states unassociated with death, as when a man faints, in epilepsy, and during sleep. 771 761 774

Apart from this evidence of the dissociation of the *mzimu* from the living body, the Yao believe that a man's shadow is an objective manifestation of the soul and they will say "the shadow is the *mzimu*." Fear is experienced if a man jumps on the shadow of his fellow. Light is also thrown on the constitution of the *mzimu* by the belief in a certain evil-spirit which dwells in deep pools. It is called *chimalo-mzi*, which means "one who may finish (drink up) all the water." The superstition regarding this evil spirit is that it can suck the blood from your shadow as you stand at the edge of the pool, till you become so weak that you fall in and are drowned. 774 774 776

After leaving the body at death, the *mzimu* goes to take up its place in the spirit-world, occupying a position corresponding to that held by the man during his life. With a truly materialistic conception, the soul is supposed to have all the attributes of the dead man, to be wealthy in proportion as the man was so on earth, and its relative position will be identical with that which he held among the living. The tribal chief becomes a paramount chief in the spirit world, the lesser chief holds sway in his lesser capacity, etc. We shall see that in intercession, when the tribe is threatened with calamities, it is the late paramount chief who is appealed to for help, and when one feudal chief is at war with another, the chief's dead predecessor will be called upon for aid. When a village is moved, it is from the spirit of the dead headman of the village that success in the enterprise is sought. Similarly, in family trouble, some dead ancestor is entreated to set things right, while a native 775

The men and boys now pass through the arch in order of seniority; each splashes himself with the water in the trough, but neither speaks nor rinses the mouth. The women come next, led by the head-wife of the chief; the latter rinses her mouth and, instructed by the doctor, repeats a prayer similar to that offered by her husband. The remainder of the women merely splash themselves, like the men, before passing through the arch. All then return to the village, where the *pyejila* is continued. 751 796

Finally the doctor takes the hammer-head from the trough and hands it to the chief, who refits the haft into it, and, a hoe having been placed on the ground, goes through the form of forging the latter by beating it with the hammer. He then scrapes the ground with the hoe as if clearing a place overgrown with grass; he does not dig with it as in hoeing up the ground for planting seed. After this rite the chief again bathes in medicated water similar to that in the trough, and the ceremony is complete.

Whereas the *pyejila* ceremony and its adjunct, the rite of the arch, are now but rarely performed, no Yao will omit the rite of purification after a death in his family. This ceremony consists of two essential parts, both protective against the *ndaka*, a disease characterised by dropsy and supposed to be contracted by contact with a corpse, or by association, especially by sharing a meal, with those who have been in such contact. The first of these parts is bathing in certain medicines, which protects the bather from *ndaka*, and the second consists of a sort of communion meal, shared by all friends and especially relatives with those who have been contaminated, and designed to protect those friends and relatives. [178] 751 764 796 783

The decoction for bathing is made by soaking the roots of *lapudembati* and *lundemele* in water, together with the bark of *mbomwa*, one piece each from the east and west aspects of the tree; the water assumes a reddish tint, and the whole body is bathed. 751 783 824 765

The communion meal consists of porridge made from any kind of flour or of rice, and some *ngunde* beans. In the latter some scorched and powdered root of *mandengelele* is mixed, with a little salt. All near relatives of the deceased must partake of this meal, as well as their wives and their near relatives; part is carefully put aside for the use of any relative unable to be present at the ceremony. [262]

Latterly, since the spread of Islam among the WaYao, this rite has become confused with the distribution of food to the poor at the funeral of a Muslim, and the Arabic word *sadaqa* ("charity") is now generally used for it, to the exclusion of its wider, correct meaning. [177] [797]

It may be mentioned here that after the death of a child the father is denied access to his wife for a period of about three weeks, and the first act must be one of *coitus interruptus*. 765 784

MEREDITH SANDERSON.

1: Tew E-4 (no date) 1950 FT7 Yao FT7

never to have had any large-scale central political organization, and their history is full of occasions when one group of Yao has attacked another. Even within his own area the authority of the chief was not, apparently, sufficiently strong to prevent one village headman from raiding his neighbours; the chief maintained no standing army.[1] The chief held certain rights and privileges. He was entitled to the ground tusk of any elephant found in his territory (the finder was rewarded after it had been sold, with a cloth); he received tribute in food,[2] with which he entertained visitors. He took a share of the spoils of war and was also entitled to annual labour service and to a gift when he made a new burial place. Apart from his military and judicial responsibilities, he had authority to settle when and where initiation ceremonies should be held.[3] The right to hold these ceremonies was sought after by the village headmen as a mark of status.[4] The chiefs or headmen of certain families had the right to wear a white cloth bound round their temples as insignia of rank.[5]

In addition the chief had a certain ritual status. He was thought to incur mystical danger by contact with death, and so was not allowed to attend a funeral nor to eat a chicken brought by a messenger announcing a death, nor to accompany his military expeditions. He was supposed to have great power through special medicines. He had to make offerings to the ancestors, especially in affairs concerning the whole people, such as drought or epidemic. He was expected to give a burial cloth at the death of an important man. At his death a period of social disorganization was recognized, members of his village were allowed to pillage and rape, until he was buried.

Succession to the chiefly office was matrilineal. The chief's position was based partly on his status as the senior male of his own matrilineal kin group, partly on his wealth. His command over slaves, guns, and caravans to the coast was greater than that of others, and from these his military strength was derived, for a chief was powerless without his following of dependents. The chief of the area was also headman of his own village. In fact, the position and duties of a village headman (except that he could not exact tribute)[6] reproduced in small scale those of the chief. The headmen also were in mystical danger through contact with death and were the channel through which the ancestors were approached in affairs concerning the village. They, too, built up their prestige and wealth by slaving activities. They seem to have been largely independent of the chief, carrying on slave raids of their own, and if they could gain a sufficient following, they might break away from the chief, and set up their own chiefdoms.[7]

The chief ruled through a hierarchy of headmen. His councillors were superior headmen, placed over a number of village headmen. Commoners could approach the chief only through the councillor in whose area their village belonged. The councillor's special duties were to report daily to the chief on the affairs of his district, to advise, and to arbitrate in the chief's own domestic affairs, e.g. in conflicts between the chief and his brothers and nephews. The councillors were not necessarily relatives of the chief,[8] but were chosen on account of their general status in the community, and their

[1] Elmslie, 4, 1899, p. 105, says of the Yao in the Shire highlands: 'Every tenth man one met might be set down as a chief . . . petty quarrels of petty chiefs were abundant. . . .' See Macdonald, 1882, vol. i, pp. 169 and 154.

[2] Stannus, 4, 1922, says that only beer was owed to him.

[3] Ibid., p. 279.

[4] Duff, 1903, p. 312.

[5] Macdonald, 1882, vol. i, p. 16; Werner, 1906, p. 260.

[6] Macdonald, 1882, vol. i, p. 153.

[7] Ibid., pp. 32 and 156.

[8] Ibid., p. 156.

2: Mitchell E-5 (1946-1949) 1956 FT7 Yao FT7

Native Authority, to the Native Authority, and eventually to the District Commissioner if the case is one which he will countenance. In practice, most cases reach the chief and go no further. Most people accept his decision. Thus the chief has important judicial functions. 692 643

The Chief as his People's Representative

In special situations where the welfare of the chiefdom as a whole has been endangered by an infringement of the mores, the chief may take action. For example, a chief prosecutes a village headman who allows a woman in his village to bear her first child before she has been through the *litiwo* ceremony. Every woman who becomes pregnant for the first time must undergo this ceremony, during which she is instructed in child welfare and child care. If she bears a child without undergoing the ceremony, she is said to have 'spoilt the country' (*ajalwice cilambo*), in the sense that she has besmirched its reputation.[1] 643 687 843

Chiefs usually call in magicians 'to smell out' those responsible for keeping back the rain.[2] When the rains fail as they did in 1948–9, their failure is held to be due to the magic of some evilly disposed person. It then becomes the chief's duty to call in a magician to indicate who this person is. The fees for this duty are paid by the chief himself on behalf of his people. 643 787 821

The chief also acts as a representative of his people when they are affected as a whole. For example, Nyambi called in a magician after man-eating lions had taken some of his subjects. This magician called for the hearth-stones and domestic utensils from all the villages in the area, and built them up into a pyramid over which he made some anti-lion medicine. This was to clear the whole chiefdom of man-eating lions. 643 789 731

Nowadays, the chief's representation of his people is seen most clearly in his position in the Administrative framework.[3] The chief represents the Administration to his people since they approach it through him. At the same time the Administration clearly treats him as the representative of his people and consults 643

[1] I was told in Mponda's area that the women undergo this ceremony *after* the birth of the child, but that it is still obligatory.

[2] *Kutawa ula*—lit. 'to tie or bind the rain', in the sense of to make it a prisoner.

[3] I have dealt with this aspect more fully in 'The Political Organization of the Yao of Southern Nyasaland'.

2: Mitchell E-5 (1946-1949) 1956 FT7 Yao FT7

Further enquiries may reveal that this is only a section of a larger village, possibly a hundred or more yards away. 622

The boundaries of a village may not always be clear. Clusters of huts which are part of one village may be physically nearer another, but in the minds of the Yao, who see not only the huts but also the social relationships of the people occupying them, there is no confusion at all. As a general rule the villages are fairly compact and clearly demarcated from others, and even strangers have no difficulty in recognizing the autonomy of the group which is expressed in many different ways. MacDonald recorded that formerly a headman performed a certain amount of ritual which symbolized the unity of the village.[1] Much of this has fallen away, but the unity remains. 621

The ritual surrounding the foundation of a new village bears testimony to its persisting political significance. In this ritual the unity of the group, against other similar groups, including the village from which it has sprung, is expressed. On first arrival at a new village site the men build grass sheds, beginning with that of the headman. That night the headman pours a cone of sacred flour at the root of a tree on the site, and asks the spirits of his ancestors whether the site is propitious. Early next morning he examines the cone to see the answer. If a side of the cone has collapsed it does not augur well and another site is selected. If the cone is still whole it is taken that the spirits acquiesce, and permanent huts can be started. The headman then goes into the bush to find medicines[2] which he mixes with groundbeans. That night, with the medicated groundbeans in the hut, the headman has intercourse with his wife. In the morning those who are not sexually active come to the headman's grass shed to drink some water in which the medicine has been steeped and eat some of the medicated beans with a little porridge, which the headman's wife has prepared from the sacred flour. This medicine is called 'the medicine to strengthen the village' (*mtera wakulimbika musi*). Until then all members of the village should have been continent but after this sexual relationships may be resumed. The object of the medicine is to prevent those 622 621 787 622 621 751 834 372

[1] See pp. 31–2.

[2] *Nkulungulu* and *nkuta*, two plants commonly used for protection against *ndaka*. See f.n., p. 112. [824]

villages, however, the headman's activities may be as circumscribed by ritual prohibitions as the chief's are. 622 554

The village headman is subject not only to mystical dangers but also to other dangers deriving from his position of authority. It is significant that villagers never go to a diviner to find out the cause of a village headman's death. When I asked informants why this was so, they said, 'Well, what's the use of it? He has enemies on all sides in the village who are trying to kill him with their magic.' In harmony with this view of village headmanship, the symbolic object which represents the village headman in the diviners' gourds I have seen, is a small ring of grass (*singwa*), a copy of the grass cushion women place on their heads when they are carrying loads. This symbolizes the ring of enemies which surrounds the village headman. The saying 'the tortoise defecates on the one who carries it',[1] usually applied to chieftainship, applies equally well to a village headman. 622 787 578 482

A village headman may expect little material benefit from his position of authority. If he is an Administrative village headman he may be paid a small annuity of 5s. or 10s.[2] Returning labour migrants may give him a blanket or a military overcoat, or perhaps a few shillings, but this is not usual. If he is not a strict Moslem he will almost certainly be given a pot of beer from every brewing made for sale in the local 'club house'. On the other hand, if an important stranger, particularly a White official, arrives in the village he feels he must give his guest a chicken. It is mannerly to reciprocate with another gift, but not all Whites know this, or, if they do, do not observe it. In particular if the chief comes to his village, he will be expected to entertain him and here can expect no recompense—the chief 'eats from his country'. 622 651 431

The Yao know that the position of headman is no sinecure. Frequently the one chosen to succeed refuses to accept the position, especially if he is well placed in employment. It is significant that the word for an heir is *litegwa*[3]—the one who is trapped. An 622 554

[1] *Ngogo jikuwpela usyene iwajigele.*

[2] Until recently this was true. As I was leaving the field in 1949, I heard that the Administration had decided to abandon this system in favour of one in which only group headmen would be remunerated.

[3] Substantive form of the passive of the verb *lutega*—to set a trap as for animals. This word is not widely known, especially among the younger Yao.

621 his mother was ill and had gone with Lupunje's younger brother to
626 the diviner to find out the cause of the illness. The diviner indicated
753 that Lupunje thought that Kalambo was not showing him the proper respect. Lupunje knew that his sisters had lost their value in the lineage since they had stopped bearing children, whereas Kalambo's sisters were still reproducing. His malice had caused the woman's illness. When Kalambo got home he asked his mother's brother to blow water out of his mouth [1] and help him to prepare some medicine for the sick woman. This Lupunje did and the woman recovered immediately.

Shortly afterwards Kalambo remonstrated with his mother's brother for causing the illness of his sister, but Lupunje said that he had no control over it: the spirits had brought it on her. Kalambo knew that he could do nothing and abandoned the idea of building his own village. He knew that there was bound to be more illness if he carried on with his plan.

182 Clearly the belief in the mystical powers of the ancestors or of
621 sorcery is a force which prevents sections from breaking away
626 from the village. A break follows only when opposition within the village has reached sufficient pitch to force one of the sections to take the risk of illness, rather than to continue living in the village. Sometimes the dissident group comes back because further deaths at their new village site convince them that their action was wrong.[2]

Effects of the Headman's Personality

622 Whether a village maintains its unity or not, depends very largely on the personality of the headman. This is why the officiating headmen and others at the installation ceremonies are so insistent that cases should be settled quickly. The main duty of a headman is to maintain harmonious relationships within his village and to see to the welfare of its members. All severe
[787] illnesses are immediately reported to him, and so are the results of all divinations. He usually sends his representative to divina-
[764] tions concerning kinsmen not related to him matrilineally. He is immediately notified of all deaths and he organizes the funeral rites. Squabbles are brought to him for arbitration and even
622 where squabbles are settled by kinsmen in the village, usually the
692 headman is formally told of them. Frequently marriage diffi-

[1] An act which recants malice. See Chap. VI, p. 139.
[2] See the case history in Chap. VI, p. 153.

The events leading up to a split in a matrilineage usually follow a definite pattern. Very frequently indeed an accusation of sorcery is involved.[1] This usually stimulates a dissatisfied warden to gather his dependants together and to move off to found a new village. Elsewhere I have set out in detail the typical events which precede a village break-up when the lineage splits after a man quarrels with his mother's younger sister's sons.[2] These splits are not always successful because the seniority of the older relative, especially if he is a headman of some standing, may serve to reunite the village, and the leader of the dissident group may be unable to maintain its independence. This is what happened in Mwambajila village.

613 578 621

Mwambajila is one of the more important village headmen in Jalasi's area. The tension between him and his mother's younger sister's son Mbwana Somu reached a climax after a series of deaths among Mbwana Somu's children. He consulted a diviner and found that Mwambajila was the sorcerer causing these deaths. Mbwana Somu was very angry at this and told his sisters that they ought to leave the village and go to live in Liwonde's area, i.e. about 15 miles away. Eventually he persuaded them to move and they went to live on the Masanje river banks. But the deaths continued. The women now started to be worried because they had left Mwambajila's village

---

[1] The implication of this cannot be understood without some knowledge of Yao divining procedure. The type of divining is usually by gourd and object (*ndumba*). The diviner first of all establishes the reason for the visit, i.e. death, illness, theft, or whatever it is. He then consults his gourd and throws into his hand a variety of symbolic objects. He builds a story round these objects, and finally pronounces that he sees some person whom he vaguely defines. The consultor is then asked to mention who this could be. Though sorcery is supposed to be practised mainly in order to get human flesh for ghoulish feasts, it is not believed to act haphazard. In other words, a sorcerer is supposed to select his victims for revenge as well as for meat. The selective processes at work, therefore, when the consultor seeks to reconcile the diviner's findings with his own suspicions, are that he should select someone who is obviously evil, i.e. from his point of view, one with whom he has been quarrelling, and he should appraise the possible motivation for sorcery. After he has made the selection the name is tested by the diviner and the consultor may later submit a chicken to the poison ordeal to test the diviner's findings.

[787 754]

This, of course, confirms Evans-Pritchard's analysis of Azande witchcraft and I here acknowledge my debt to him for stimulus both from his book and from the discussions we have had on the topic. I assume his analysis in my discussion. See Evans-Pritchard, E. E., *Witchcraft, Oracles and Magic among the Azande*, Clarendon Press (Oxford, 1937).

[2] In *Seven Tribes*. Case History II, 321.

2: Mitchell E-5 (1946-1949) 1956 FT7 Yao FT7

578 and that he could not understand who could be inducing them to
593 talk like this. He told them also that as far as he was concerned they could report the case to whomsoever they wished. The women came
621 out of the hut and went straight to Pawesi who was the headman's younger brother. He told them to go back and to wait a while before they took further action.

578 After four days had passed the headman's sister who had fought with the headman's wife, became ill. In the morning the sisters sent
593 a message to Mponda but he did not come. They sent another
754 message to Pawesi who came and asked if they had told Mponda. They said that they had, but he had refused to come. Pawesi called
787 James and Ajusa, the sister's sons of the headman, and told them that he would tell the headman that they were going to find out the cause of the illness. This they did. The diviner indicated that the headman had caused the illness by sorcery, because of the fight between his wife and sisters. Pawesi tested the divination by giving a chicken some poison. It died, indicating that the divination was accurate. He took the chicken's head to Ngunga who was Mponda's perpetual mother's brother.

When Ngunga heard this he refused to believe it. However, he agreed to send for Mponda and to ask him about it. When he did so Mponda denied the accusation. Ngunga now produced the chicken's head and accused Mponda of being a liar. At that moment a child came to tell them that the woman was dead and the interview ended. They went to the funeral and the next morning they decided to have a post-mortem meeting (*mapeto*) in order to decide the cause of the death. Mitomoni, one of Nyambi's perpetual sons, represented the chief. Ngunga opened the discussion by telling the meeting that the woman had been killed by the headman because of the fight between his sisters and wife. Mitomoni asked how they knew this and Ngunga told of the divination and the poison ordeal. He then asked Mponda if he had heard what had been said and what he had to say. Mponda replied that he knew nothing of it. Ngunga said that Mponda was a bad man and that the others would leave him and he would have to live alone. Mitomoni told Pawesi and Ngunga that they must not leave the village. Ngunga replied that it was impossible to stay there while Mponda was so bad. If the women stayed with him he would finish them all. Pawesi collected 30 of the 40 huts that made up the village and took them away to Chikweo's area, a distance of about 15 miles. Those who stayed behind with Mponda were his 'children' and some unrelated people.

593 This case brings to the fore the position of the younger brother
578 as a constant challenge to his elder for the care of his sisters.

2: Mitchell E-5 (1946-1949) 1956 FT7 Yao FT7

604 578 Mwanace. He was the junior marriage surety to the marriage and it was his duty to go to the man's marriage surety, report the matter and arrange to take some action to get the man well again. Mwanace, however, refused to take any action. Instead he tauntingly said, 'Take the matter to Ali Kasunka, it is his village.' The woman did so, and Ali Kasunka asked immediately whether she had not taken the matter to Mwanace. She replied that she had and repeated Mwanace's words. Ali Kasunka took the matter up with Mwanace who now objected to being ordered about. Ali Kasunka, however, impressed on Mwanace that the village was his (Ali Kasunka's) and the authority rested with him. He then went to the man's home to tell them of Wayison's illness. The man's representative came and he and Ali Kasunka consulted a diviner. They found that the man was ill from *ndaka*, which he had contracted in his home village. They found medicine and treated him and he recovered.

604 578 833 ●787 684 Things came to a head in 1947. Mwanace's younger sister Nyangu II (D11) was married to a soldier who was away. One morning she came to her mother's elder sister, Mbalasyao (C1),[1] and told her that she had found semen on her pudenda and could not recall having had intercourse with anyone. Mbalasyao told Ali Kasunka about this. It was clearly a matter for divination and Ali Kasunka called Mwanace and told him that they ought to consult a diviner. But Mwanace's attitude, even in such a crisis as this, was hostile. He refused and said it was not his work to do this sort of thing. Ali Kasunka therefore went to a diviner with his sister Mbalasyao. The diviner said the semen was Mwanace's. He said that he had entered her hut magically and had sexual intercourse with her without her knowing it.[2] When Ali Kasunka got back to the village he called Mwanace and asked him what tricks he was playing in the village. Mwanace said that he had done nothing—it was not his village. Ali Kasunka then vaguely hinted at his crime. Mwanace pressed for more details and Ali Kasunka accused him outright of sleeping with his sister. He had hardly uttered the accusation before Mwanace had drawn a knife and attacked him. Mwanace was screaming something to the effect that Ali Kasunka had come to him with lies about having seen a diviner. Ali Kasunka beat off the attack and reiterated the accusation. Mwanace now turned his rage upon the woman and tried to catch her. Two of the men in the village then caught Mwanace and subdued

[1] Her mother, Amaliama, was dead.

[2] This is called *cigonecesya*. It combines the use of magic with sister-incest. [835] To the Yao mind there could be no clearer proof of sorcery. I have already mentioned the importance of sister-incest in relationship to the beliefs surrounding the sorority-group. See p. 146.

2: Mitchell E-5 (1946-1949) 1956 FT7 Yao FT7

him. The woman in the meantime had run to Chiwalo's hut half a mile away. Here she complained to the chief that Mwanace wanted to kill her. Chiwalo refused to listen to her complaint and sent for Ali Kasunka. When he had come and explained the sequence of events, he continued saying that he would like to take the case to court. Chiwalo, who was Ali Kasunka's wife's father's sister's son (hence a classificatory younger brother) and whose henchman Ali Kasunka was, refused to arbitrate in the case but referred it to Kawinga. On the day of the case the woman's husband came back from the Army. The case was tried and eventually the court assessors awarded a damages claim of £3 to be paid by Mwanace to his sister. The husband, at the same time, said that he could not remain married to her because whenever he saw her he would think that she had slept with her brother and in court he gave Ali Kasunka a marriage termination payment. The tension between Ali Kasunka and his 'sister's son' did not end there however. When they got back to the village Ali Kasunka remonstrated with Mwanace saying, 'Are you not ashamed to have married your sister?' Mwanace said that he could not stand that sort of thing and went back to live uxorilocally.

A crucial point in this case history is that the women did not like Mwanace. Almost certainly there would have been a split in the village had the women had more confidence in Mwanace. The tension between Ali Kasunka and Mwanace, although the conflict is inter-generational, started, as it consistently does, from the relationships of a man to the women of his matrilineage. Without the support of the women, younger brothers or sister's sons are impotent against the power of their senior relatives. It is only when they can induce the women to follow them and to leave their rivals that they can found a new village and thereby begin to earn prestige. Therefore, although the men are the active agents in bringing about a physical act of fission, they are in fact only making manifest a situation which is latent within the lineage.

The position of the senior male matrilineal relative is of fundamental importance in questions involving segmentation. His position is seen most clearly in the dominant matrilineage, in which the name of the village is inherited. The Yao practise 'positional succession'. A man not only succeeds to his mother's brother's name but also to the position of the mother's brother in the social structure as a whole.[1] It follows that when the

[1] See Chap. V, p. 121.

3: Stannus D-5 (ca. 1912) 1922 FT7 Yao FT7

754 A *masuwi* may be met with under different circumstances. An educated native told me of his experience one night when riding a bicycle back to a township where he was employed. Coming along a smooth-hoed path with his lamp alight, he became aware of the presence of something in the bush in front and at the side of him. Suddenly his lamp was smashed and he was left in darkness, while something pushed him over so hard that he fell off his cycle. Picking himself up, he started to wheel his cycle on, when there appeared on the path in front, figures who, rubbing their hands together to produce a phosphorescent glow, held them up in front of the boy's face. He was, however, not molested further, and coming to a group of huts he knew, he went in and made inquiries as to the cause of his experiences and was promptly told that there was a man living in a hut near the spot on the path where they had occurred who was supposed to be *masuwi*. Such a story is given for what it is worth. The boy was about twenty-two years old, a highly educated native with an intelligent appreciation of the worth of superstition.

Some *masuwi* demonstrations can have no object but to strike terror and keep up the prestige of the *masuwi* class. Mr. Moggridge wrote me, "A boy of mine was certainly attacked and squeezed about the neck by a man whom he described as naked, huge, and slightly luminous, on the road at the back of my house in Blantyre. The boy was strolling up and down in the dusk and had nothing about him to provoke robbery; he was almost choked before he managed to let out a yell which determined his assailant to let him go. He was not a local boy and no theory of personal spite was supportable. I thought and still think that the motive was to show that even the Resident's servant twenty yards from the Resident's house was not safe from *masuwi*." It seems possible that some natives with intent to rob had pretended to be *masuwi* but recognising that their victim was likely to cause trouble, they went no further.

[824] It is said that the phosphorescence is produced by rubbing in the hands two vegetable substances from local trees and that this is the method the *masuwi* adopt to announce their presence.

754 **Poison Ordeal.** As I have said above, when anyone sickens or dies, the illness or death
·695 is likely to be considered the work of some one who is *masuwi*, and action will be taken by the relatives to find him out. The proceedings in such a case where witchcraft is suspected will now be briefly sketched; though I give an account of a case from beginning to end as if it occurred at the present time, it must be understood that the giving of *masuwi*, the ordeal poison, is now much less common than formerly. A man becomes ill in some village and does not get better, so the caster-of-lots is consulted. The sick man's relatives or friends go to the lot-caster and approach the subject indirectly by asking him his advice about a number [787] of imaginary cases; they may say, "Things have been stolen from our house." The lots are cast and the caster replies, "No, you have not come to see me about that." This may go on for hours before the facts of the case proper are mentioned to him. Finally, they tell him that one of their relatives is ill in the village, the lots are consulted and advice is given

3: Stannus D-5 (ca. 1912) 1922 FT7 Yao FT7

and sitting within the circle, he blew his whistle which was irresistible to the *mwesi* man who was then induced to come out of his house. When he had reached the grave, the water was sprinkled over him by the *junaketela* with the millet stalk from the dish on the grave, or he was struck with the gnu's tail; in either case, he fell to the ground senseless. He was then ready to be dealt with. The *seketela* sticks, small bamboos filled with crocodile poison, were pushed up the anus and broken off to liberate the poison. Sticks might also be inserted behind the ear or in various other spots. The *mwesi* was then beaten to wake him up; he ran off to his own village and there, a little later, he sickened and died, telling no one the cause. After death, the *ausilo* when preparing the corpse of the hitherto unsuspected *mwesi*, might find the end of the stick projecting from the anus or see the punctures elsewhere with the medicine adhering to them, and the man was revealed in his true colors. 754 695 791

At Mtwiche's village, there was a man called Liunga who professed to be able to extract the poison injected by the *junaketela* by causing his patients to undergo a vapor bath and to drink certain decoctions. This man would never reveal the name of anyone who came to him for treatment but would brag that "trade was brisk." The symptoms of the mortal malady caused by the *seketela* are said to be intestinal obstruction with tremendous distention of the abdomen (peritonitis). [184]

Of this same village, a story is told which, if not true, at all events illustrates the sort of thing that is believed. As has been mentioned above, whenever the *junaketela* blows his little horn, any *wasowi* will hear it and thinking it is one of their band calling, will go to meet him. A woman of this village told how she and her husband were sitting over the fire while the evening meal was cooking, when he suddenly jumped up and said he must go outside for a bit. She remonstrated and asked him to wait for his food, but he hurried off. Later he returned, complaining of feeling very ill; his belly swelled up and he died soon after. It was said that this man was very friendly with a woman named Abibi and that when he went out into the bush, he was heard calling in a low voice, "Is that you, Abibi?" When his body was examined, two punctures were found on the left side of the chest. It was supposed that it was Abibi he expected to meet and with her enjoy a cannibalistic repast, whereas it was a *junaketela* who had called and killed him.

This brief outline of a case of sickness, suspicion of witchcraft, death, and the consultation with the caster-of-lots, the witch-finder, ordeal poison, death, and the catching of the cannibal witch, has been given as a more or less consecutive story in order that it may be most easily understood. Some further details concerning the lot-caster, witchcraft, etc., must be added.

Lot-casting. Medicine men who cast lots were at one time fairly plentiful and were consulted on many matters, often of small importance from a European point of view. Chief of all were questions of witchcraft. The *modus operandi* varied in different cases. In *wasowi* and other important matters, the medicine man always used the *chisungo* (divining in- 787

3:Stannus D-5 (ca. 1912) 1922 FT7 Yao FT7

787 strument). These were of various types but the most usual was made of a gourd, *ukhumbe*, called *ukumbe*,[1] containing a number of small articles, each of which had some special name and if it appeared in the casting, a special significance. Among these articles are:

(a) *Ashikhokoki;* small pieces of broken white earthen-ware. These have the significance of whiteness, cleanness, innocence, or answers in the negative to questions as to any particular person having done some action.

(b) *Chiwumapeje;* the body of one of those beetles which feign death. This indicates death in answer to the question asked. *Chiwumapeje* is the name of the beetle.

(c) *Upese;* a small piece of a sleeping-mat, signifying linen.

(d) *Liwale;* a small piece of stick or grass.

(e) Or *Mwale* the plural; little pieces of stick, said to indicate that the people have previously consulted some other diviner, whose findings are called for by the man who is then casting lots.

(f) *Mwenge;* the horn. For convenience the small horn of a guapi is used. It indicates witchcraft, referring to the fact that witches like medicine men are supposed to keep their medicines in horns.

(g) *Npolaka;* the coiled tendril of a vine, indicating a dispute, etc.

The lots are cast, and according to the disposition of the various articles, an interpretation is given in answer to the question put to the instrument.

Chipende (*plur. ipende*) is the word used in referring to instruments used for divination in minor cases and several of these are usually included in a diviner's kit. They may be called *chisange*.

1. A small heap of flour or ashes is raised and any article, such as a knife or a piece of stick is flipped towards it; interpretation is based on the direction taken by the article flipped.

2. A small tortoise shell filled with medicine propelled by a feather stuck in one end is similarly used, and is called *chisange cha ngwepe;*[2]

3. A horn and feather may be used in the same way.

4. The stuffed skin of a weasel, *chindinde* (*lilongwe*, Chin.) is also used, in the same way as *gulupulo*, the squirrel.[3]

On February 4, 1914 at Zomba I witnessed Chinganire of Chapita village, a Mangaeja man, use a small outfit for divining, consisting of: (1) A small orbid horn in a gourd with pieces of stick (Pl. XVI, figs. 3, 5); (2) a piece of bamboo matting with a horn fixed on each end of the strip called *chisange cha ngwe* (Pl. XVI, fig. 2); (3) medicine in a gourd (Pl. XVI, fig. 1); (4) a rattle (Pl. XVI, fig. 4). He commenced by taking these things out of his bag and dusting them by rubbing in his hands. The gourd cup was cleaned out with his finger and spit into. The horn was spit upon, rubbed in the hands, and anointed with

[1] Stannus, 'Notes on some matters of British Central Africa,' Pl. XXVII, fig. 4.
[2] Ibid., Pl. XXVI, fig. 2. [3] Ibid., p. 304 and Pl. XXVI, fig. 3.

3:Stannus D-5 (ca. 1912) 1922 FT7 Yao FT7

medicine from the gourd by means of a stick; then placed at the forehead, point forwards, held for a second at each armpit, and finally rubbed over in the hands again. The cup was similarly manipulated, especially the edge, and rubbed in the hands, as were the horns on the *ulu* spoon. All this was done with great precision and evidently in definite order, each article being laid on the ground in turn, and the string of matting rolled up. Four pieces of reed of a size that would lie over the mouth of the gourd cup overlapping the edges about an inch were then selected from among others and set ready on the ground. The rattle was treated with medicine from the same gourd. The horn was placed in the gourd by the operator, point upwards and lying towards himself, as he held the gourd by its body in the palm of his left hand, the handle towards him. Shaking the rattle in the right hand, he constantly muttered to the *chisungu* " to tell him truly," " to answer his questions," and so on. By slight movements of his left arm which were well disguised but quite easily perceptible to the watcher, he could make the horn assume the erect position in the gourd and then fall backwards or forwards or to either side. The first position indicates " all is well," "nothing need be done"; the second means "there is trouble," "some one is talking at the village," " there is a case to be settled." Thus answer questions put to it by the owner who is being consulted about some case of illness, etc.

Another method of divining is with the horn in position as before mentioned and the four pieces of stick set across the mouth of the gourd touching one another, the ends projecting at the sides. The operator is able to make the horn appear to force off all the sticks without moving the gourd, or he can make any number of the sticks tumble into the gourd, and repeat the performance. If they fall off, it means a good day to go on a journey; if they fall in, the journey should be postponed.

The *chisungu ulu* spoon is held similarly in the left hand by the middle so that two wings are formed, each with the weight of a horn at the end. The *matter-of-fact* is able by almost imperceptible movements to make the two wings open and fall away from each other or swing together, and together partly roll up. When they fall apart wide open, it is an indication that all will be well; when they close, death may be expected. The gourd and horn and this *chisungu ulu* spoon form a pair which are called female and male.

Chipanda ulu ndinga: *ndinga* is a word relating to omens in regard to journeys. Thom Chonga told me that he remembers as a boy, when his father was going on a journey, he would take some pieces of root, moisten them in his mouth, and stick them on the wall of the hut. These pieces of root were daily watched by Thom's mother, as unaided they gradually took up a position lower and lower on the wall until they reached the ground. Then she knew that her husband had safely reached his destination.

Omens may be told in yet another way, *chisungu ulu kwandula* (*ku-wandula*, to speak). *Ndundu* is put in an empty house and the medicine man and his clients sit outside. The medicine man is asked some question which he puts to the *ndundu* which then answers like an oracle. I have never seen this done but my native informants tell me the voice that

3: Stanner D-5 (ca. 1912) 1922 FT? Yao FT?

787 498

spoke is invariably usual in character and Chinyanja is the language always used. It is doubtless a case of what we should call ventriloquism. The custom is evidently of Mang'anja origin but in great favor with the Yao.

787 695

Divination also plays an important part in tracing thieves or stolen property or in picking out from a number of people anyone guilty of some crime. Several modes of procedure may be adopted. The *chisungo* called *ndumba* may be used as the *chisungo cha chipeto* (*chipeto*, a kind of basket). Medicine in the form of certain roots is placed on the ground and covered by the inverted basket on which is placed the *ndumba*. Each person in turn is requested to lift the basket and the guilty one is at once revealed by his inability to budge the basket off the ground. This method may even be used to reveal a man guilty of witchcraft.

787

Other methods of divination include a kind of trial by ordeal somewhat similar to a boiling water ordeal. *Kwendula* (from *ku-endula*, to tramp round, referring to the peregrinations made in search of what is lost, or *nawendo*, the Chinyanja word from *ku-londa*, to follow on the footsteps of) is the name of the witch-doctor who searches for stolen property or traces the thief. The same man may be called *nakwendula* in Chinyanja (from *ku-vendula*, to reveal) when he uses his instrument to detect in a crowd the person guilty of some crime. The *kwendula* uses the horn of a kudu stuffed with appropriate medicine, the actual *mise en scène* and methods adopted varying somewhat with different practitioners. The practice I believe to be a Mang'anja one and I think most of the operators were Anyanja men and not Yao, though the Yao, as with other customs, adopted the system fully. In my district, the *kwendula* was usually armed with a rattle; when the horn indicated the guilty individual, he intimated the fact to the assembled crowd by throwing flour over him.

When a search is to be made for stolen property, the horn is put into the hands of four men, alternate men pressing down and pulling up on the long horn, while the medicine man stands by, operating his rattle and exhorting the horn to do its work of revelation. I know a man who has on several occasions assisted in holding the horn; he said it simply seemed to drag him on in a series of jerky movements, sometimes going very fast, at other times moving slowly, dragging the holders "along the footsteps of the thief with the stolen goods" in and out of the house, through the bush, and across streams, until suddenly the horn dropped from their hands to the ground, where on digging, the stolen goods were found buried. (Cf. table turning, planchette, etc.)

[114]

A good description of *kwendula* under the headings *nakwendula* and *nawendula* is given by Garbutt,[1] who describes the Mang'anja operators. In this same article, he makes the mistake of describing as *nakwindula*, the *fumahula*. As I have stated above, the *fumahula* is an order of medicine men who trap the man who is an *wizard* while in the *wizard* state, but the *nakwindula* points him out while he appears as an ordinary man of the village.

[1] H. W. Garbutt, "Native customs in Nyasa," (Man, London, 1910, vol. 10, p. 38-40).

3:Stanzus D-5 (ca. 1912) 1922 FT7 Yao FT7

Witch-medicine. The making of medicine against people has been shown to occupy an essential place in *usuri*, and it plays an important part in all conditions. So by insensible grades, the ordinary use of drugs in common diseases is reached, though it is probable that very much greater faith is placed in a packet of burnt roots put under the floor of the house than in the efficacy of any concoction taken by mouth. 754 [757]

There is a general belief that by medicine extra ability verging into supernatural power can be acquired. This power in a general sense is represented by the word *ukoma* and a man so possessed is spoken of as *mundu fun komale*. The desire for increased power may be a perfectly natural one, such as a desire for influence and popularity as a chief, or on the other hand, the power of *usuri* may be aimed at, or again, the knowledge of magic medicine for thieving or for any other practice. *Ukoma* is, therefore, a relative matter. The necessary medicine or initiation into the understanding of magic can be purchased from persons already practitioners, the honest herbalist merging by imperceptible degrees into the most criminal witch-doctor. A single practitioner may prescribe a charcoal dressing for an ulcer, exorcise an evil spirit by a vapor bath, sell medicine to enable the buyer to win a case at court, arrange medicine on a pathway to act as a selective love potion, or prescribe a drug to change a man into a lion. 756 787 791

Deserving of special mention are the people who thieve by the aid of medicine which they have either purchased or prepared themselves. Such a man is called *chitoka* and the medicine *ntoka* or *chitoka*. The active principle of this medicine is said to be prepared from the tail of a hyaena, an animal which is said to be able to enter a house where people are sleeping and kill and carry off the fowls without waking the occupants. The medicine is often carried in a hyaena's tail. The *chitoka* is supposed to approach the house he would rob and chewing some medicine in the mouth, gently blow towards it to put everyone to sleep. The door is supposed to unfasten itself and the thief is free to take what he wishes. He is even said to kill, cook, and eat food in the house while the inmates remain unconscious. A special characteristic of the *chitoka* is that whatever he lays his hands on in the house he must remove, though he does not want it, so that in the morning many unwieldy, useless objects may be found outside the hut. 791 789

There are many other magic medicines. One of these, *fungo*, if introduced into a village, will cause the illness and death of some inmate. Anyone handling the body of the sick man or the corpse after death, sickens and dies until the whole village is wiped out. There is a man serving a life sentence now at the Central Prison, Zomba, who was convicted of having caused the death of many people in a village in Angoniland. He is said cheerfully to have admitted the power of his medicine. 754

Medicine made from a cousin is supposed to be efficacious in various ways. The blood of a cousin is instilled into the ear for otorrhoea. Drinking the water which has been used by a cousin to wash his face relieves intestinal colic. Medicine is made from the hairs of the beard of a cousin or from an adzie and used for chest trouble. 757 605

3:Stannus D-5 (ca. 1912) 1922 FT7 Yao FT7

19. That portion of the gut of animals having folds of mucus membrane inside, may be eaten only by old people past the child-propagating age. If a young woman should eat it, she would have difficulty in labor. 771 784 [DCA]

20. It is believed that people who eat too freely of a little fish like whitebait called *matemba* get obstruction of the bowel by the wedging together of the bones. The treatment adopted is to pass up the rectum a smooth stick with a pad of rag at the end. This cannot be done by the person himself and so the aid of another has to be called in; only an intimacy, such as the relationship of brother-in-law gives, will warrant this service being asked.

21. The Yao believe that there is a little insect which lives in the ear, called *chiqwa lipilamile*, which tells the person what is said to him, the wax in the ear being its excrement. The pupil is called *mwanache jwa lisu*, the child of the eye. [826]

22. Among women, the uterus is called *nawaw* (*nawo* = eyes); it is supposed to be a little person who holds the foetus. When the child is born, *nawaw* cannot find it and starts looking about, the movements causing the afterpains.

23. A man making his first journey to the coast used to sprinkle himself with water from every stream he crossed to give him a safe journey. In the same way, women at the present day going between Zomba and Blantyre sprinkle their babies with water from each stream. [787]

24. An ant-like insect called *mbupatumba* (*bumbutumba*, Chin.) [*Anoplolepis nuphiatis*] is lucky. On seeing it a native pats its belly and then rubs his own, wishing for plenty of food that day. If he is embarking on a journey or beginning some enterprise, he will wrap one of these insects in a fold of his loin cloth and take it with him for luck. [825]

25. When a native hears the *mwipe* bird call (its call is like the mew of a cat), if he wants something, he immediately says, "Oh *mwipe*, I want so-and-so. Be quiet and I will then be quiet, too!" If the bird ceases calling, he knows the wish will be granted. The female bird is said to be the more certain prophet.

26. The snake, *nahulahuli*, which lives in trees and is of a buff clay color with green markings, is said by natives to pierce the chest and tie a knot in itself on each side so that it can only be withdrawn by cutting off one knot. When the snake is thus withdrawn, its blood mixes with that of the man and he will die.

27. Nagiyao have a habit of marking the spot where any event takes place by a stone by the side of the path, and every passer-by will add a stone for luck. In this way some large piles of stones have been made. [777]

28. A man resting on his way home from a long journey places a stone in the fork between the branches of a nearby tree, so that on his arrival he may find his wife has put by some food for him and has not used up the day's stock of flour.

29. A chameleon found digging in the path is said to presage the death of the finder's nearest relative. [787]

3: Stanner D-5 (ca. 1912) 1922 FT7 Yao FT7

771 784 30. If a chameleon is found holding on to the grass at both sides of the path, the path is "closed" and a man will turn back to his home and not proceed on his journey. It would be unlucky to continue.

789 31. Snakes seen in coils are a bad omen.

771 784 32. The slow-worm known as *Kimbulu mamapulu* ("the cutter open of ant hills"), and the scaly anteater, if seen on the path, are of bad import.

33. To knock the toes against a stone on a journey is bad luck; if blood flows from the big toe, it points to good luck.

34. A man knocking the sole of his foot against a stone knows that some one is speaking ill of him.

35. A person whose hands itch knows he will receive a present.

36. Tremor of the circumorbital muscles of the right eye indicates that something good will be seen. When the left eye is affected, the outcome is less sure.

37. The cry of the bird *upulubulu* (the green turaco), indicates to the hearer that he is about to meet some one, either friend or enemy.

771 784 625 38. Anyone who kills one of the large stink-insects (*Pharamidae*) known as *chikuse chiwipa*, will always be breaking the cooking pots afterwards.

39. The natives believe that the caterpillar of the *Hippotion sairis* moth will jump at the breast. It is called *chiyumbila mumulu*, "that which jumps at the breasts," and children seeing it will cover up their nipples with their hands.

40. Of *Linda*, the Mongoose, there is a saying:

[539]

"*Linda pyumbimpwe nikila*"
"The banded mongooses relieve each other (at) the meal"

It is said that mongooses assist one another when being hunted. When one is tired, a fresh one runs in so close to the pursuer that he goes after this one and leaves the tired one, and so they keep it up till the pursuer is exhausted.

41. *Chinda*, the frog. Children are told they must never kill a frog, or its spirit will come at night with porridge made of excrement and make them eat it. If a small child playing with a frog kills it by mischance, he will tear off a small piece of his native cloth and place it by the frog as an offering.

42. *Chindindi* (Ikongwe, Chin.) the weasel. It is said that the weasel hides its body and leaves exposed its anus, so that a chicken seeing it, goes up to peck at it, whereupon the weasel turns round quickly and catches the chicken with its mouth.

43. *Chingwe*, the skunk (from *Ku-ngwe*, to go to stool), so named on account of its odor, is said to apply the anus to a rat-hole and make wind. This will render inaudible all the rats in the burrow and he can then dig them out at leisure.

44. *Mbudi*, the honey badger, when hunted is always said to attack a man by attempting to seize the testicles. Natives when they hunt this animal, tie stones in their loin cloths so that they hang down between the legs to defeat the badger.

3:Sinanus D-5 (ca. 1912) 1922 FT7 Yao FT7

769 A man leaving his village on some expedition and wishing to be assured of safe conduct
484 will procure some millet flour. Going quietly into his house, he squats down in one corner
787 and gently sifts the flour through his hand so that it falls on the floor in the form of a little
cone, repeating as he does so, his prayer for safe conduct beginning and ending with the
word *chonde!* please!

[539] "*Chonde! chonde!* wa-ku-wulanga wulaje nilangaya nuse pangu nilinuse
"Please, please! those at above ancestor clear eye mine that I may see
kinda, ngwinke 'chenene kungwiji, chonde! chonde! chenenuke!"
the path, may I arrive well where I go, please, please, please!"

He then covers the cone of flour with a basket. On the morrow, he will uncover it to see what has happened. According as the cone has remained intact or has fallen to one side or the other, the omen indicates whether or not the journey should be undertaken, the reaction being caused by the spirits to whom his supplication was addressed.

769 Again, there may have occurred much sickness in a village and the people conclude that the pest has come to remind them that they have not been attentive to their deceased chief. "His grave-house in the village has been allowed to fall into decay," and so on. They will decide that his spirit must be propitiated. The grave-house is rebuilt, a pot is sunk in the ground, and beer is poured in, and round about heaps of flour are placed. Prayer is made to the chief at whose grave they are worshipping, supplicating him in person and "all others who are with you at *Mlungu*," asking that he will no longer cause ill to befall the village.

When a village is moved, the beer-pot from the grave of the old chief is taken to the new village and a ceremony similar to that just described takes place, with the prayer that he will come to the new village and continue to exercise his benevolent care over its people.

731 In 1890 when there was a threatened famine on account of long drought in Zombe dis-
769 trict, Malenya decided that supplication for rain must be made to the spirits of his illustri-
ous predecessors. Kasunga, one of Malenya's wise men, acted as high priest. A large amount of beer was brewed and the night before the ceremony, twenty sheep and fifty goats were slaughtered. Plates of the meat, of rice and porridge were then placed on the ground round the grave-house of the old Malenya, and pots of beer set into the ground at intervals. At the head of the grave, little heaps of *mbepwi* flour were arranged. This flour had been prepared by such of Malenya's wives as were not near a menstrual period. The following morning, a fence was built round the grave, outside which all the people collected, while beyond them again was a second fence. Kasunga, accompanied by an assistant then appeared, and amid absolute silence entered the inner enclosure. He addressed to the old Malenya, at whose grave they were all assembled, a prayer for rain. He then repeated the prayer, invoking the aid of all the past line of chiefs down to the reigning Malenya, re-
[514] peating their names. Returning to the outer enclosure, he again uttered the prayers, all the assembled multitude repeating them after him while lying face down, resting on their

3:Stanons D-5 (ca. 1912) 1922 FT7 Yao FT7

824 778 be supposed to live in such trees. They are convenient natural objects for them to occupy, in fact practically the only ones to be found in villages. Trees may secondarily, therefore, be looked upon as in some degree sacred. About such trees strings or pieces of calico may be placed as an offering to the spirits of the departed. But the Yao do not erect little huts in their vicinity, hung about with strips of calico as is the custom among the Anyanja.

775 Macdonald[1] mentions the spirits in connection with Sochs and other hills round Blantyre and supposes them to be the spirits of the places themselves. This I think is unlikely; they would probably turn out to be spirits bearing the names of long departed Anyanja chiefs whom the immigrant Amangoche Yao venerated just "to be on the safe side," since they had come and taken the country which long ago belonged to the former tribe. When approaching or passing any spot held to be the dwelling place of spirits, salutation is made by clapping the hands.

Spirits of the departed may enter into animals or may take the form of animals, commonly lions and sometimes large snakes (python), but this belief is not so general among the Yao as among other tribes, in my opinion. An animal which is so possessed is called *liapulu*, from *ku-apulu*, "to be transformed."

[174] Apart from this habitation of inanimate objects above mentioned by natives, there is nothing that points to a belief in Animism among the Yao, so far as I know. Neither hills, rocks, streams, lakes, nor trees have their own spirits, nor are they endowed by the native mind with life.

Deceased persons appear to the living in dreams, the native apparently believing that the deceased appears in his material body.

775 787 791 They believe also in revelation of wishes of the deceased through the medium of the living. The spirit of the deceased is supposed to enter into the medium. The medium, I am informed, is always a woman, never a man. From the descriptions of some of these revelation séances, there can be no doubt that they are manifestations of *la grande hystérie*. The medium works herself up into a frenzy of excitement and in her delirium gives out the name of the deceased, the voice which speaks being that of the spirit within her. She rolls on the ground and froths at the mouth, uttering the word of revelation which is generally to the effect that some deceased chief's spirit is feeling aggrieved at the neglect of his tomb; the voice may go on to say that certain practices are forbidden, or demand that certain rites be observed by the people. The spirits which possess her are generally spoken of as *mandu*, a word which, though sometimes used as equivalent to *mizimu*, usually seems to [158] have rather a sinister significance. Insane persons are called *mandu* and are thought to be possessed by a spirit, and vapor baths with emetics may be practised for their cure. In the case of the death of anyone who is possessed, in answer to my interrogation, I have [161] been told that both the spirit which has entered into the man and his own *mizimu* leave his body.

[1] Op. cit., vol. I, p. 76.

3: Stannus D-5 (ca. 1912) 1922 FT7 Yao FT7

●1787

285

285
415

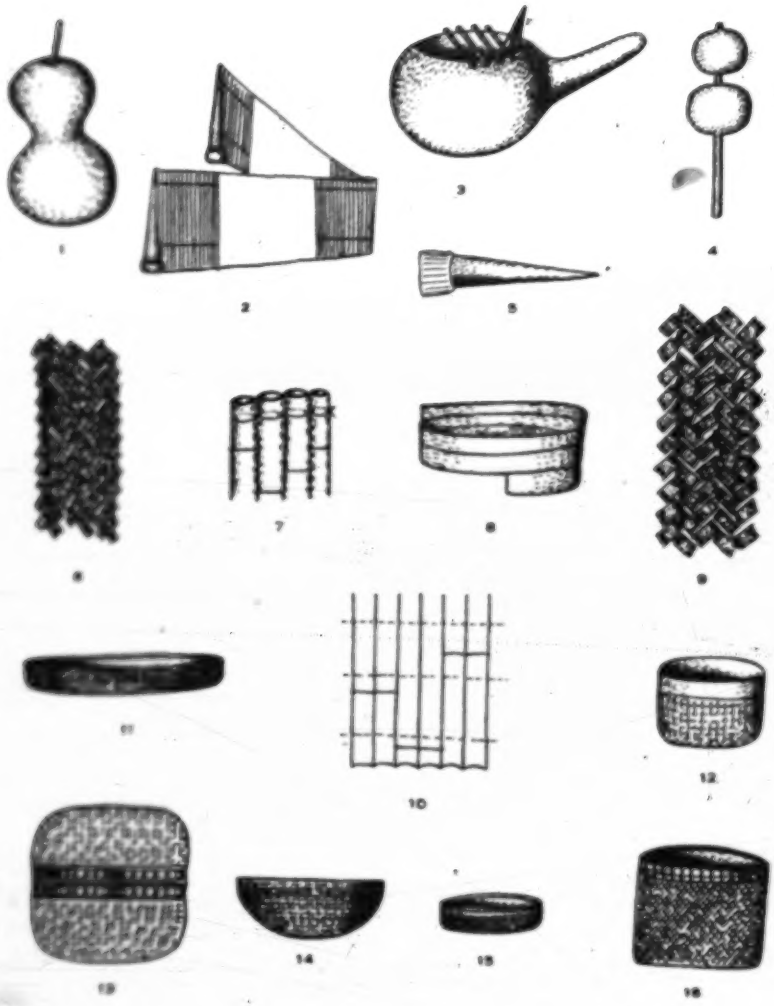

1-6, Dowser's kit; 8-10, Mats; 11-16, Baskets

[End Plate 16]

4: Stannus D-5 (ca. 1909)1910 FT7 Yao FT7
Moravi FR4

Journal of the Royal Anthropological Institute, Vol. XL, 1910, Plate XXVII.

M
Y
415
787
534
276
531

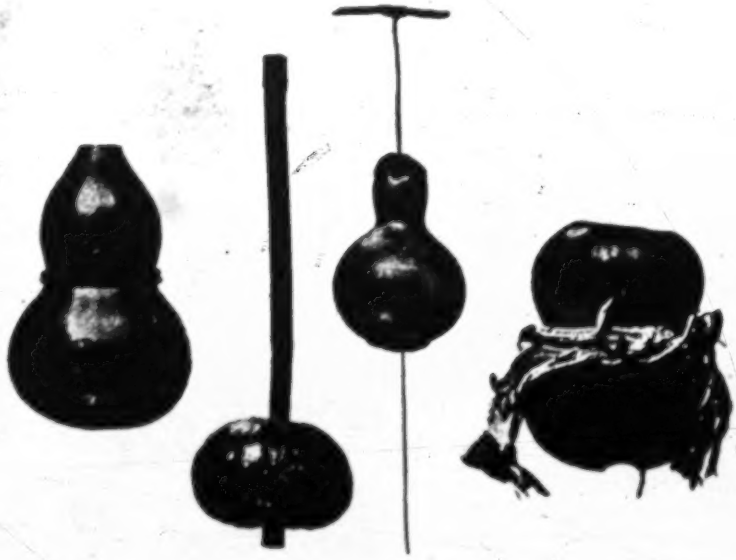

1 2 3 4

SOME TRIBES OF BRITISH CENTRAL AFRICA.

[p. 334(B)]

4: Stannus D-5 (ca. 1909) 1910 FT7 Yao FT7
Maravi FRY

M 535

and the feature of it was the introduction of life-size representations of animals made of bamboo and grass with men inside.

I once saw these at a *namwali* ceremony among the Awisa (*q.v.*).

12. *Nkole.*—Woman only present; danced on the occasion of a girl's first menstruation.

13. *Litiwa.*—Women only, on the occasion of the quickening with first child.

Y 535

14. *Njrula.*—Men and women, a quick shuffling step while standing in a circle.

15. *Sukuas.*—The body shaking (shoulders) dance of boys, they walk round in a ring, some fifty of them, the drums in the middle; when the bass drum breaks into a quicker time they all start shaking shoulders and bodies with intervals for two or three steps.

16. *Nsenja.*—Danced in a circle, men and women alternately.

17. *Nkonde.*—A big dance with *sanji* rattles.

18. *Chibonda.*—Dancing boys dance.

19. *Mberuas.*—(1907) men and women; each carries a bango reed filled with pebbles—no drums.

20. *Mangenji.*—A coast dance; palm leaf bags filled with pebbles are tied on the legs.

21. *Senja.*—A *pas-de-deux*, each man with a rattle and head-dress; for a few moments they wander round each other picking up the time and tune, and then jump into a very fast step dancing and jumping into the air shaking the rattles.

22. *Chimwiniwini.*—A *pas-seul* by a man carrying a viol and bow with anklets of small sticks.

Y M 535

23. *Mawes.*—Danced no longer. At Mponda's village a big crowd used to dance with skins round the loins and wooden anklets: in their hands they carried live snakes which had been rendered harmless by putting medicine over their holes before digging them out. Four drums as in *chindimba* were used. The women all fled away.

Description of Plates.

PLATE XXVI.

M 789 778 534 412

1. Iron tube with human hair.
2. Tortoise-shell containing "medicine."
3. Leaf packet of "medicine."
4. Tortoise-shell.
5. Iron knife.
6. Horn containing "medicine."
7. Seed rattle.
8. Bead amulet.
9. Stuffed squirrel skin.

1–9. Contents of the bag of an *Ula*-man.

PLATE XXVII.

M Y 415 787 534 276 531

1. Gourd vessel, Yao.
2. Gourd rattle, Yao.
3. Divining-gourd.
4. Gourd for casting lots.
5. Malanja.
6. Amachinga.
7. Awisa.

7: Hetherwick M-5 (ca. 1900) 1902 FT7 Yao FT7

774 they said, "was about to take away their shadows and they would die." In their
123 mind the *liseku* was allied to the *chisilili* or picture, and the removal of it to the photographic plate would mean the disease or death of the shadeless body.

As an instance of their faith in the close relationship of the *liseku* and the
123 picture or shadow, I may relate the following incident. An influential Yao chief
753 on Mount Zomba with whom I was on terms of intimate friendship for years,
refused to allow himself to be photographed, fearing the consequences on his life.
774 At last I was able to persuade him to give me a sitting, but on the sole condition that the picture was to be shown to none of his subjects but to be sent out of the country as soon as possible. He feared lest some ill-wisher might use it as a means towards his bewitchment. Some months afterwards the chief became seriously ill, and in the minds of his attendants his illness was attributed to some accident having befallen the photographic plate on which they believed the picture of their chief to be imprinted. If that negative had been broken in England, whither it had been sent, their chief's illness would be accounted for. Accordingly they appealed to the divining oracle, who, however, after consulting the "lots," assured them that the picture was intact, and that in consequence the disease must be ascribed to some other cause.

774 The *liseku* or soul is recognized as the chief agency in dreams. To dream is,
in the Yao tongue, *kwangamila masoku*, where *masoku* is the plural form of *liseku*.
787 The *liseku* is supposed to go out and visit the scenes and persons it dreams about, and in turn is visited by the *masoku* of others, dead or living. Pains in the body on rising from sleep in the morning are usually attributed to such nocturnal visits,
[753] while disease or pains of a severe type are ascribed to castigations by the whips of the *masoku* or more frequently of the witches who prowl around during the night watches.

774 Madness, idiocy and the ravings of delirium or disease are accounted for by a similar agency. The sufferers are *wa masoku*, they of the spirits, and a sudden fit
828 of epilepsy or insanity is described as *gakamwili masoku*, the spirits have seized him. Such persons are usually regarded with awe, as living in close contact with the unseen, but no incantations or enchantments are ever used to expel the spirit in possession. Some native doctors are credited with a knowledge of certain
[755] medicines which they say are effectual in such cases, but their application in no way differs from those employed in treating ordinary types of disease. Idiots and the insane are allowed to wander at will about the village, and only when violent symptoms show themselves as a danger to the community is any physical restraint put upon them.

754 The *masoku* are also recognized as the inspiring agencies in the ravings of the witch detective. This person, usually a woman, is called in to discover who is the guilty agent in cases of mysterious deaths or outbreak of an epidemic at a village. She arrives on the scene and takes up her abode for a few days previous to her actual demonstration. She mixes with the people, learns all the scandal and gossip of the community, and at night prowls about the houses searching for

7: Hetherwick M-5 (ca.1900) 1902 FT7 Yao FT7

evidence. On the appointed day she dances, *kuyina masoku*, to dance the spirits, or *kuwwesta*, to rave or prophecy, and in the ravings of the dance she calls out the name of some party who is afterwards accused of being the *mauci* or witch. Followed by a crowd of excited spectators she dances through the village spear in hand, stopping here and there to dig up charms or medicines which the supposed witch has buried in the ground as the instruments of his occult practices. It is only in cases of supposed special difficulty, or when the magnitude of the supposed crimes demands that special measures be adopted for their detection, that the services of such a witch detective are called in. In ordinary cases these appeals are made to the divining oracle who consults his "lota" as a means of discovering crimes of this nature. 754 [787]

Among the Yaos the human being is believed to be the sole possessor of a *liaoka*. I have been unable to discover any trace of a theory that the *liaoka* may pass into any animal or inanimate object and thus confer upon it the nature or power of a fetish. Such belief is cherished among the Angoni and Achowa tribes to the westward by Nyasa and the upper Shire River, and the intelligent Yao is aware of this, but he states that among his people no such belief exists. Even charms which have the effect of healing or warding off disease, or of protecting the wearer from war or wild beasts or other danger by land or water, are supposed to possess this power without any idea of their being possessed by a *liaoka* or other spirit influence. The nearest approach to such a theory is in the case of certain powerful "doctors" who have obtained special medicine by means of which, at death, they can transform themselves into lions, leopards, crocodiles, etc. Lepers also are sometimes supposed to become hippopotami. But both of these cases must be regarded rather as transmutations of body than transmigrations of soul. 774 [171] [751] 756 775

It will be thus seen that the nature of the human *liaoka* is closely allied to that of the *masoku*, which are the inspiring agents in madness and in the ecstasy of prophecy or incantation. What the origin of these inspiring *masoku* is, or to whom they belonged when in bodily life, the Yao holds no theory. He is content to accept them as they are, *masoku ipopo*, "Just *masoku* and nothing more," as he says. 774 828

It is, however, when we follow the disembodied *liaoka* after death and consider its position and power in the other world that we find ourselves in a region of higher spiritual activities. 775

In dreams or in fainting fits the *liaoka* leaves the body but only to return to it with the awakening consciousness. At death, however, it leaves its earthly abode never to return. It is now spoken of as having gone to *malungu* or *mlungu*. This word, which lies at the basis of all Yao theories of the place of the soul after death, will be dealt with later on as regards its derivation and connections in the Bantu family of languages. In its actual use it bears two significations.

I. The word *malungu* is in the first instance applied to the human soul or *liaoka* after death when it is considered as an inhabitant of the spirit world. Even in life a man, when he meets with any piece of good luck, will be heard to say, "It's my *malungu*," as if his soul had an influence in determining the character of his

2: Mitchell E-5 (1946-1949) 1956 FT7 Yao FT7

Native Authority, to the Native Authority, and eventually to the District Commissioner if the case is one which he will countenance. In practice, most cases reach the chief and go no further. Most people accept his decision. Thus the chief has important judicial functions. 692 643

The Chief as his People's Representative

In special situations where the welfare of the chiefdom as a whole has been endangered by an infringement of the mores, the chief may take action. For example, a chief prosecutes a village headman who allows a woman in his village to bear her first child before she has been through the *litiwo* ceremony. Every woman who becomes pregnant for the first time must undergo this ceremony, during which she is instructed in child welfare and child care. If she bears a child without undergoing the ceremony, she is said to have 'spoilt the country' (*ajalwice cilambo*), in the sense that she has besmirched its reputation.[1] 643 687 843

Chiefs usually call in magicians 'to smell out' those responsible for keeping back the rain.[2] When the rains fail as they did in 1948–9, their failure is held to be due to the magic of some evilly disposed person. It then becomes the chief's duty to call in a magician to indicate who this person is. The fees for this duty are paid by the chief himself on behalf of his people. 643 787 821

The chief also acts as a representative of his people when they are affected as a whole. For example, Nyambi called in a magician after man-eating lions had taken some of his subjects. This magician called for the hearth-stones and domestic utensils from all the villages in the area, and built them up into a pyramid over which he made some anti-lion medicine. This was to clear the whole chiefdom of man-eating lions. 643 789 731

Nowadays, the chief's representation of his people is seen most clearly in his position in the Administrative framework.[3] The chief represents the Administration to his people since they approach it through him. At the same time the Administration clearly treats him as the representative of his people and consults 643

[1] I was told in Mponda's area that the women undergo this ceremony *after* the birth of the child, but that it is still obligatory.

[2] *Kuiawa ula*—lit. 'to tie or bind the rain', in the sense of to make it a prisoner.

[3] I have dealt with this aspect more fully in 'The Political Organization of the Yao of Southern Nyasaland',

2: Mitchell E-5 (1946-1949) 1956 FT7 Yao FT7

contents. Here once again the women, though they may have no boys in the initiation ceremony, are called 'the mothers'. The ritual co-operation of the mothers in the initiation ceremonies is paralleled by that of mothers and sons in political affairs: here sons are in charge of the villages, while their mothers and sisters form the nucleus of the localized kinship group, which in turn is the core of the village. 562 601 881

The ritual importance of the mother is nowhere more clearly seen than in the curse. The Yao believe that a mother may curse her child if he or she is disobedient or otherwise beyond control. Not many mothers do curse their children; the threat to curse seems to be more often used. Informants have told me of some mothers who have cursed their children, and the procedure and the wording of the curse have always been very similar. It is usually not applied to young children who could be punished by other means, but to adults and particularly adolescents. Usually the mother lifts her breast and points the nipple upwards saying, 'If you have never sucked from this breast nothing dreadful will happen to you.' The consequences of this are greatly feared. Where I have been told of curses, each time the child has either died suddenly shortly after the curse, or at least it has gone mad. The curse is vaguely supposed to operate through the ancestor spirits, but I could get no clear statement on how this happens.[1] Whatever the cause, however, the symbolic action of lifting the breast and the dire effects which are supposed to follow from this, indicate the importance of the mother in the lineage. 562 861 789 769

The Yao attach this sentiment, in general, not only to the mother, but also to all senior matrilineal female relatives. In general speech all female members of the matrilineage in ascending generations are 'mothers', and all members in the descending generations are 'children'. This fundamental relation of mother and child extends throughout the lineage. The Yao term *acinangolo*, used for the senior female members of the matrilineage, embodies this idea of 'the mothers'. More specifically, as far as men are concerned, the matrilineage is classified into 562 601

[1] Further evidence that the ancestor spirits are involved in the curse may be that madness is called *masoka*—spirits—and that it may be said of a madman that the spirits are beating him (*gakumputa masoka*). A curse may be revoked by blowing water out of the mouth, an act which is also vaguely connected with the ancestor spirits.

2: Mitchell E-5 (1946-1949) 1956 FT7 Yao FT7

604 627 sister's son. This, however, is not common because matters such as these, the Yao feel, ought to be settled within the matrilineage, or at least among kinsmen. The more usual procedure is for the mother's brother to take his complaint to some senior matrilineal relative who may be a perpetual mother's brother of the mother's brother, as say Cibwana Kawinga is to Cikoja.[1] Or if the matrilineage is part of a village, the mother's brother may take his case to his village headman, who is as likely as not his perpetual father. The senior relatives have the force of authority and public opinion behind them and frequently some agreement can be reached at this level. Where this is not possible, say because the perpetual elder relative lives too far away, the mother's brother may take the sister's son to court and bring the sanction of the Native Authority's punishment upon him. This is very rare.

604 789 There is still a certain mystical sanction behind the mother's brother's control over his junior relatives. This is based on the curse, which in turn draws on the belief in common ancestor spirits. A mother's brother may say to a sister's son or other junior matrilineal relative: 'If you have never sucked from the breast of my sister, nothing dreadful will happen to you.'[2]

604 754 The fear of sorcery is another force which operates to control the wayward activities of a sister's sons. People in senior generations are usually looked upon as having particularly wide knowledge of potent medicines. Though a sister's son may sometimes use sorcery against his mother's brother, the reverse is believed to be more likely to happen. I have recorded elsewhere[3] the details of a case where a sister's son left a village, against his mother's brother's wishes, to find work in town. He subsequently met his death in an accident while trying to get the honey out of a wild bees' hive in a treetop. At home his death was attributed to the sorcery of his mother's brother whose will he had frustrated.

604 578 On the other hand the sister's sons, while bound by an ethical code to honour and respect their mother's brothers, find that in fact these stand in the way of their own personal ambitions. A man's heir is his sister's son and it is quite understandable that there should be some tension between a man and his heir. But

[1] See p. 132. [2] See Chap. VI, p. 135.
[3] 'A Note on the African Conception of Causality', 54–5.

3: Stannus D-5 (ca. 1912) 1922 FT7 Yao FT7

There has never been any shortage of land and therefore the plotting out of gardens was a matter which caused little trouble. A man wishing to make a new garden the next season simply marked the site in the bush by scoring some trees or hoeing around some patches of grass and tying the grass ends into a knot. If anyone else came along and hoed this plot, the man who had marked it out still claimed it and need not pay for the hoeing done. Whenever a man was doubtful about a piece of land, he would ask advice of the headman of the village. 423

When an abandoned garden had become overgrown, anyone wishing to take it up applied to the headman who sent him to ask the original owners whether they wished to take it up again. The newcomer could take possession only with their permission. 361

Often if a village were moved, during the first season the people simply put up shelters in their gardens. Later, the site of the village was chosen and around it a medicine man sprinkled medicine to insure happiness and prosperity. The tree from which this medicine was made became sacred to the village and might not be used for firewood, or was subject to any other taboo the medicine man might care to make. He might also say, "In this village there shall be no pounding of grain at night," etc. 423 [789] [778]

If a village were to be built near a spot previously inhabited, medicine and offerings were made to the departed spirits of the former occupants to put them at rest and "open" the place to the newcomers. The beer-pot from the grave of some former chief or headman, who was supposed to have directed the destinies of the old village, was brought to the new location and beer placed in it to insure his continued guidance. [769]

In the case of a village into which a number of men had married, the sponsors of the wives went to the sponsors of the husbands and asked permission to move the village.[1] Later, beer was brewed in the new village and the sponsors invited to come and drink and "put foot in the new village." [273]

Relationship. Family relationship among natives presents certain difficulties to the European accustomed to equivalent relationship of males and females on both sides of the family. In the diagram below (Fig. 1) the relationship of the two children (C 5) will be traced. The mother and father (B 10 and 9) are the *achikulu* and *wese* but are addressed as *amao* and *atati*. The maternal uncles older and younger than the mother (B 11 and 15) are called *akwelume* and their wives (B 12 and 16) *akwegwe*. The maternal aunts are addressed as *amao*, mother, anyone older than the mother being distinguished as *amao wakulungwe*, "the bigger" (B 13), a younger aunt as *amao wanandi*, "the lesser" (B 17); their respective husbands are addressed *atati*, *atati wakulungwe* (B 14), and *atati wanandi* (B 18). On the father's side the uncles are called *atati wakulungwe* (B 1) and *atati wanandi* (B 5), respectively, for those older and younger than the father, and their wives *amao wakulungwe* (B 2) and *amao wanandi* (B 6). The paternal aunts are called *atati wakongwe* (female uncles) (B 3 and 7), their husbands (B 4 and 8) *atati*. 593 601

[1] Vide supra, p. 236.

3:Stannus D-5 (ca. 1912) 1922 FT7 Yao FT7

Witch-medicine. The making of medicine against people has been shown to occupy an essential place in *usawi*, and it plays an important part in all occultism. So by insensible grades, the ordinary use of drugs in common diseases is reached, though it is probable that very much greater faith is placed in a packet of burnt roots put under the floor of the house than in the efficacy of any concoction taken by mouth. 754 [757]

There is a general belief that by medicine extra ability verging into supernatural power can be acquired. This power in a general sense is represented by the word *ukoma* and a man so possessed is spoken of as *mundu jua komala*. The desire for increased power may be a perfectly natural one, such as a desire for influence and popularity as a chief, or on the other hand, the power of *usawi* may be aimed at, or again, the knowledge of magic medicine for thieving or for any other practice. *Ukoma* is, therefore, a relative matter. The necessary medicine or initiation into the understanding of magic can be purchased from persons already practitioners, the honest herbalist merging by imperceptible degrees into the most criminal witch-doctor. A single practitioner may prescribe a charcoal dressing for an ulcer, exorcise an evil spirit by a vapor bath, sell medicine to enable the buyer to win a case at court, arrange medicine on a pathway to act as a selective love potion, or prescribe a drug to change a man into a lion. 756 787 791

Deserving of special mention are the people who thieve by the aid of medicine which they have either purchased or prepared themselves. Such a man is called *chitaka* and the medicine *mala wa chitaka*. The active principle of this medicine is said to be prepared from the tail of a hyaena, an animal which is said to be able to enter a house where people are sleeping and kill and carry off the fowls without waking the occupants. The medicine is often carried in a hyaena's tail. The *chitaka* is supposed to approach the house he would rob and chewing some medicine in the mouth, gently blow towards it to put everyone to sleep. The door is supposed to unfasten itself and the thief is free to take what he wishes. He is even said to kill, cook, and eat food in the house while the inmates remain unconscious. A special characteristic of the *chitaka* is that whatever he lays his hands on in the house he must remove, though he does not want it, so that in the morning many unwieldy, useless objects may be found outside the hut. 791 789

There are many other magic medicines. One of these, *lwanga*, if introduced into a village, will cause the illness and death of some inmate. Anyone handling the body of the sick man or the corpse after death, sickens and dies until the whole village is wiped out. There is a man serving a life sentence now at the Central Prison, Zomba, who was convicted of having caused the death of many people in a village in Angoniland. He is said cheerfully to have admitted the power of his medicine. 754

Medicine made from a cousin is supposed to be efficacious in various ways. The blood of a cousin is instilled into the ear for otorrhoea. Drinking the water which has been used by a cousin to wash his face relieves intestinal colic. Medicine is made from the hairs of the beard of a cousin or from an *ubile* and used for chest trouble. 757 605

3: Stannus D-5 (ca. 1912) 1922 FT7 Yao FT7

832 *Mpasi* is a love potion. Men are often anxious that women should ask them for love (*ku-pala*). A man seeing a woman whom he fancies, takes up some of the dust where she has trodden and mixing this with medicine puts it in his hair. If he meet her again, though he takes no notice of her, she will come to him.

789 241 [826] When crops are harvested, a layer of the cereal is laid at the bottom of the corn-store, and *umba*, which consists of medicines contained in the skull of or made from the body of a still-born infant, is then put in and the store filled. In this way, he who has only a small garden may be sure that his grain will last a long time. Similar medicine is put in gardens with the first rains to insure heavy crops. A man on the approach of the planting season should never give away seed to anyone until his own seed is put in or it may bring bad luck to his crop. This is evidently a superstition arising from the fact that if he gives seed away, he may not have enough left to raise a crop sufficient to support his family. Some people are considered "lucky at planting pumpkins, other people when they plant, reap only watery pumpkins." A man, therefore, will often ask one of the lucky people to plant his pumpkins for him. My hospital boy always got the cook to plant his pumpkins.

789 824 A man wishing to become a person of importance, with a village of his own, takes a medicine made from a certain tree and then builds his hut in a new place, hoping people will flock to him. The tree is known as *chukambili*. Another medicine, taken in the belief that people will flock to a man in consequence, is made from the bush called *ntola*. Cf. *litula* planted at the threshold to attract visitors.

789 791 Conjuring. There are other performances akin to magic in the eyes of the natives, which I have never had the opportunity of witnessing but which would appear to be of the nature of juggling or possibly hypnotism; some resemble the tricks of jugglers; others are more like some of the performances in India. I naturally supposed that they had been learned from men at the coast (Zanzibar), but I am assured that they belong to the Yao themselves.

Kambenje, a Yao of Chiradzulu, well-known at dances and *Usapo*, after some preliminary dancing, stands still and is covered by a cloth; when the cloth is again removed, he is discovered with a number of squealing puppies held in his loin cloth, which he then hands round. He begins to dance again and the persons to whom the puppies have been given watch him and then find they are holding excrement, not puppies. Or mud-fish are handed round and the people find they are holding women's diapers.

Another trick often performed by Kambenje was the burial of a man in the ground, covered up completely with earth; at the sounding of the drums the buried man comes running in from the back of the watching crowd.

Kasonga, a Yao of Malemya's, priest, and medicine man, after an *Usapo* ceremony used to put on his red blanket and walk over the hot embers of an enormous fire in the village open space. He admitted that he smeared himself with medicine and an eyewitness told me that when he put his feet on the hot logs, it caused a sizzling sound.

3: Stannus D-5 (ca. 1912) 1922 FT? Yao FT?

Tingulingu was another well-known performer; he used to do the same tricks as Kambenje. He also was possessed of an elastic skin and is said to have been able "to tie his ears together behind the back of his head." 789 791

Mpechetula, a Yao of Mkanda, is a man with considerable renown. He is said to be able to produce a lion at will from a lion's tail and claw. He would offer to show this if there were any brave enough to go through with it. On a moonlight night, he would expose on the ground in a cleared space near a village the tail of a lion held cross-wise in a piece of split bamboo. At the split end of the bamboo, he would place a lion's claw and round this, a woman's belt held in position by three bamboo pegs, around which he would draw a circle of *ufuepwi* flour. Everyone would then withdraw to a hut in which the seance was to take place. After an hour or so, Mpechetula would send some one out to inspect the lion's tail where probably all would be found intact. He might then pretend to be uninterested and sleepy and suggest that some one should go out again in half an hour. Sooner or later, a man would come back, having found the tail gone; then everyone would go out to see what had happened. The pegs would be found in place but the tail and claw gone. A little way off, the split piece of bamboo would be found and further still a bead or two from the woman's belt. These, Mpechetula would pick up, and leaving a little trail of flour on their way, all returned to the hut, while he whistled as if calling some one. Suddenly they would be aroused by the sound as of a lion brushing against the hut walls, as the beasts are known to do, and next, a loud roar. Mpechetula would immediately open the door half-way so that the people could look out into the moonlight and there, a little way off, would be the lion. It would immediately advance towards the house and then, as it prepared to spring for the door, Mpechetula would offer it some of the flour in his left hand, armed with a stirring-stick, *mtiko*, in his right hand. As the lion landed, he would strike it on the head with the stick and lo and behold! the lion would vanish and the tail and claw would be found in his hand.

Superstitions. Scattered throughout these notes, particularly under *Usuwi* and *Diavoa*, mention is made of practices which show a strong belief in superstition. Below are given a number of minor beliefs, and it is interesting to compare them with many well-known superstitions in other parts of the world. 771 784

1. A child who cuts the upper incisor teeth first will be unlucky. Such children used to be killed by the Yao. (Other tribes make medicine against the threatened ill-luck.) [777]

2. A woman with polydactylism may not take food out of a corn-store. Otherwise the stock of corn will not last long. (Rudimentary sixth fingers are not uncommon.) [732]

3. An insect called *chiperu nusi* which lives in the mud at the bottom of pools, if killed causes the water to dry up. [823]

4. If a boy puts a water-spider in the armpit when learning to swim, he will learn quickly.

5. A man wishing to prevent rain falling on a day he is making a journey, will wrap some of the leaves of the *mtowowi* tree in his loin cloth and go without drinking. [824]

3:Stanous D-5 (ca. 1912) 1922 FT7 Yao FT7

As an example of another kind of intermediary may be mentioned a woman called Binibi Chikanowa, who, though an Anyanja, was well known among the Yao of Zomba. She was consulted on many occasions about the future, about rain, or the prevention of disease. She was a woman of quiet ways and greatly respected; she had no fixed abode but was received everywhere and given food and shelter. She would sometimes disappear from the district and travel to far distant places. A son, born to her when a young woman, was lately a patient under my care, a man of about forty-eight. On one occasion she was consulted about an epidemic of ulcers among the people near Zomba. She asked all the people from the villages to go down to Lake Shirwa and to take a white fowl with them. When they had all collected, she appeared, carrying in each hand a little gourd containing ulupuwi flour, and a small open basket on her head. She took the fowl in one hand and then proceeded to walk into the water, saying she would have to go to a little hill on an island in the lake called *Chidia Mpiri* and that she would come back in three days. She then walked on into the water and disappeared below its surface. In three days time, she returned to the village and said that the women must give up dancing the *chipunda* dance for twelve months and all would be well.

On other occasions she usually worked along similar lines. Consulted as to whether or not some sick person would recover, she always answered with the same formula, if she thought he would die, "The house is prepared for him and medicine would avail nothing!"

There are certain other supernatural persons or spirits to which reference must be made. *Chimalo-mazi* has been mentioned above. *Mamuna*, a word which Hetherwick translates as "madness, idiocy,"[1] really refers to the delusions and hallucinations which form part of the perceptions of the insane. The word also has the meaning of obsession, phobia, and intuition; thus the natives say of an ox about to be slaughtered that shows signs of realizing the approaching evil, "it has mamuna." On the other hand, they say the hartebeest is a foolish animal that does not know what to do when hunted: "it has mamuna, it is a deluded animal." Again, the baboon and the crow "have mamuna"; they are possessed of senses or faculties which warn them of the approach of any enemies before they can be seen or heard; they cannot be stalked. In all these cases, the crowd of hallucinatory men pursuing were melancholic, the rats of the delirium tremens patient, and that which appears to warn the crow or the baboon, are all mamuna and are, I think, supposed by the natives to have some kind of materialistic form.

Ndodoka: when the *wamori*[2] do not wish immediately to devour the body of a deceased person which they have raised from the grave, they cut off the arms and legs at the elbows and knees and insert medicine into the stumps; these living-dead are then compelled by the *wamori* to live in caves and hollow ant hills during the day and to follow them at night in their travels, "like a herd of goats," to be eaten as required. The *ndodoka* may be heard as they wander along in the night, making sounds like a cat's mew. A woman will

[1] Yao language, op. cit., p. [illegible]. [2] Vide supra, p. [illegible].

3: Sumnner D-5 (on. 1912) 1922 FT7 Tao FT7

never leave any food outside at night, not even the chaff from the grain she has been pounding, lest these most miserable of beings be attracted by it.

Chinsu is a word common to several tribes and among them appears to have various shades of meaning. Among the Wayao, the Jinsu are "the little people" of the leprechaun order. They rob the gardens and come out among the pumpkins; their little footprints can be seen where they have passed hither and thither; fruits and vegetables that they touch will become bitter. To prevent these disasters, the Yao, at the time when their crops are ripening, place different kinds of vegetables at cross-roads, hoping thereby to satisfy the Jinsu and prevent them coming into the gardens. As far as I am aware, the Jinsu have nothing to do with fundas and are in no way connected with *M'ungu*, to be mentioned below, as Macdonald believed.[1] The chinsu is variously said to be "like a man but rather like an animal." He has two legs but goes on all fours.

The Yao describe another legendary race of "little people" who used to live in this country and who may still be met with, — "who knows?" They were of a very small stature, grew long beards, were very tawny, quarrelsome, and fierce, and carried spears. When anybody met one, he was immediately asked: "*M'wambonde kungi?*", "From how far did you see me?" and it was always well to pretend to have seen the little man coming a long way off and make him believe he was considered quite a big person; if you said "Hallo, I have only just spotted you!", he would immediately spear you. They are commonly supposed to dwell on the tops of high mountains and are iron workers. They are called the *M'wambonde kungi*.

There is no relation so far as I know between these two classes of "little people," but I think these stories go to uphold the theory recently enunciated by Hastings Guilford in his Huntarian Lecture (1916) that folk-lore fables of lobgobbins, etc., have a basis in fact. He believes that dwarf races at one time were to be found, possibly over a very wide area of the globe. In this country, I think it may be that one sees the transition from historical facts to true fairy stories.

The Anyanja have the same legend about these "little people," the *mwandi mwaloni* ("where-did-you-see-me"); it is indeed not only widely spread throughout this country, (the Ahenga and Ankonde in North Nyasa district speak of the *mwandimwaende* who ask the same question), but there is a very similar legend among the Akikuyu in British East Africa.[2]

The *chinsu* is doubtless the *chinsui* of the Anyanja, mentioned in Scott's dictionary,[3] as Miss Werner[4] has supposed, for one finds that among the Anyanja at the southern end of the Protectorate, the *chinsu* is described as having only one side to his body so that he is invisible when viewed from the off side, thus resembling the *chinsu* who has one half of his body made of wax.

[1] Op. cit., vol. I, p. 75. [2] M. W. H. Beech, 'Pre-Bantu occupants of East Africa,' (Man, London, 1916, p. 40-41).
[3] Op. cit., p. 87. [4] British Central Africa, op. cit., p. 38.

3: Stanton D-5 (ca. 1912) 1922 FT7 Tao FT7

857 same time so that the bean is contained in one hand; the other player has to guess in which 524 the bean lies and this he does by striking with the finger the hand in which he imagines the bean to be. If the striker guesses correctly, he moves his man and his slave to the first sleeping-place. It is then his turn to hide the bean. So it goes on till one or the other arrives at the slave-market. Here he bartters his slave for trade-goods and returns in the same way; whoever gets home first wins, and the loser is said "to have died on the road," a not uncommon event in the old days. It is interesting to note that cheating is sometimes attempted by palming beans between the fingers, so that in the hand guessed, the bean is palmed between the fingers, and, in the other hand, a bean is released from between the fingers into the palm.

[788]

526 *Njanga* (native, Chin.): a kind of ninepins, which takes its name from the object which is thrown to knock down the ninepins. The game is played by youths and men, equal numbers sitting in two parallel rows fronting each other on the ground, the two rows composed of a dozen or more persons, a few yards apart. Each person has set up in front of him on the ground a maize cob from which the grain has been stripped, or each may have a number of them, perhaps six. In the former case, the cobs are perhaps two feet apart, in the latter only a few inches. Each player is provided with several njanga, from six to twenty-four in number. The njanga is a piece from the side of a gourd, slightly concave-convex and circular in plan, with the edge often cut into serrations. A piece of reed is fixed through a hole in the centre, projecting an inch or an inch and a half from the convex surface, thus forming a kind of tentorium, two or three inches in diameter (Pl. XXII, fig. 9). It is held between the thumb and second finger by the foot-piece; by a sharp movement of the fingers, it can be spun out of the hand and, at the same time, jerked forward by another sharp movement at the wrist. At a given signal, the players on both sides start launching forth their little tops which spin away towards the maize cobs of the opposing side, the object being to knock them down. When there are many on a side, each with a number of cobs, many fall with the first onslaught, but as fewer and fewer remain, it becomes more difficult, and players try to show their skill by aiming at the cobs farthest away from them, along the opposite line. The game goes on till only one cob is left standing; then, if a player of the opposite side knocks it down, he puts one of his own up again, and the side which had the one remaining puts one up, and so the game may go on. When they are tired of playing, they say, "*Kwitula tonsuge*," "We must finish the game," literally "Come on, we must smell."[1] A knife is then stuck in the ground on either side, the blade pointing to the opposite side, and each man, when he has hit the knife of the opposing side with his njanga, is considered to have shown his skill, and goes off. The last man remaining is laughed at as being a fool at the game. If a headman is playing, he makes sure of having his try first, so that he will not be left in to the last. The game has a great fascination for the natives and it is said of Malenya, the uncle of the present chief (1913), that he was

[1] Vide supra, p. 347.

4: Stannus D-5 (ca. 1909)1910 FT7 Yao FT7
Marav; FR4
Ngoni FR5
Bemba FR5

M 301 Necklaces, most commonly for children, are made of a number of little square pieces of hippo ivory strung together, ornamented with geometrical designs.

M 789 Medicine is often carried in a little packet suspended round the neck, as also charms of various kinds. The medicine may be some powdered charred roots or little twigs, leaves, etc., of some tree; these are sometimes now wrapped up in a Y [789] piece of paper on which is written some extract from the Koran (among Mohammedan Yao); this is then sewn in a little piece of calico and adorned with beads and suspended round the neck with a string.

Charms take various forms. Small pieces of wood or, to guard against attack M 301 by lion, teeth are worn. Armlets of the same kind are worn against sickness, and others are worn by Angoni, made of beads to which knives are attached. Bracelets of ivory, plaited grass and elephant tail hairs are also worn.

N 301 Metal and wirework bracelets are commonly worn by Angoni, also twisted wire finger rings and rings of lead and ivory. Heavy brass ankle rings and spiral brass leg and arm rings 6 inches and 8 inches wide are worn by some of the women (Atonga).

B 301 Bracelets cut from the nail of the elephant's foot are worn by Awanda hunters, and little finger rings cut from the scale of the ant-eater are worn as medicine against fever by headmen.

Belts made of wound copper wire are worn round the waists by Wankonde.

M 302 The use of pigments applied to the body is very limited. I have seen stripes of those, white and red, on the faces of young women, boys and dancers, generally M [439] after some ceremony. The significance I do not know. Pigments are now obtained from Indian traders, and I do not know how old the custom is. There is no beautification of face, body, nails, and eyes by pigments. The only application made to the skin is castor and ground-nut oils to keep it soft—no scents are used.

CLOTHING.

M Y N Among tribes of Nyasaland the amount of clothing worn varies very considerably from nothing to European garments.

291 Of the large majority, however, including Mafanja people, Yao and Angoni, one [855] may speak generally.

The young children commonly run about naked, or have a strip of cloth covering the pudenda, supported by a string round the waist.

M Y N Among the adult population the amount of clothing depends largely on the [556] affluence of the individual, and those who cannot afford much have little clothing. A man wears a strip of calico supported in front and behind by a string round the waist, a woman a piece of calico 18 inches wide reaching from the middle of the thighs to the umbilicus.

Of the more prosperous, the men wear calico from a little below the knee to the waist, carefully wrapped round the body, and kept in position by some kind of belt; sometimes it is folded across the upper part of the chest or sometimes crossed over in front and two ends tied behind the neck.

3: Stanner D-5 (ca. 1912) 1922 F77 Tao F77

[281] The chief, having appointed a day on which the ceremonies shall begin, sends a messenger with a fowl to a medicine-man whom he asks to conduct the ceremonies. The medicine-man is called *n'wishile* "he of the tails." He carries his medicines stuffed in the tail-skin of a gnu or sable and we shall see that his tail or tails play a very important part. Having sent word back to the chief of his acceptance of the invitation, he gets his wife to prepare some fresh castor-oil with which he will remake his medicines, and sends out the boys of the village to collect firewood. A big bonfire is made and dancing goes on all that night in his village. Early next morning he returns to the door of his hut where his wife hands him his "tails." He then immediately departs for the village of the chief. His wife trills with her tongue, this being the sign of his departure, and dancing men, some friend (often his brother) who acts as his chief assistant, his wife, and others will go with him.

[534] He signals his approach to the chief's village by singing:

"*Ee* *mwe'he* *nyeine,* *nyeine'ne!* *Tingwishe!*"
"You at the village! I don't be long!"

As he enters the village, all the women hail his arrival by trilling the tongue (*lu-lulula*). He goes straight to the open space in front of the chief's house where the chief meets him. The chief immediately goes into his house and producing a cloth, gives it to the *n'wishile* who then places his "tail" on the ground, (*ndubile,* "things put down"); these are the signs of the compact. A house is given to the *n'wishile* wherein he may rest and sleep.

That night, all the mothers of the boys who are to undergo their initiation, now called *wali* (*sing. wuali*), pound flour for the morrow. Early the next morning, the *n'wishile* visits the place where the pounding is going on and collects a little flour from each woman's basket into a small basket he himself carries.

The chief then gives him a cock and a hen, an ass and a bow; with these he goes off accompanied by the fathers of the *wali* to the spot where *Lepunda* will be made. Arrived there, he first points out the spot where his own hut is to be erected. This is quickly built, followed by the shelters for the *wali*.

The cock and hen are then killed and cooked, also some porridge; the entire fowl is cooked; the liver is not cooked separately. When it is ready, the *n'wishile* takes a piece of the liver from the pot and some porridge from the other pot together in one hand and then throws them into a little hole where his "tail" has been resting. At this spot, *Lepunda* is made. The *n'wishile* then partakes of both again and eats; after he has finished, the other men eat.

[535] After the building of the shelters is finished, fire-wood is collected. On the roofs of the grass shelters figures of animals in grass may be strung up on posts, but they have no definite significance.

In the meantime in the village, the chief has had *ukuyani* (ceremonial flour) prepared. It is made from millet by his head wife, who must not be near a menstrual period.

3: Stanner D-5 (ca. 1912) 1922 FT7 Yao FT7

as to procuring medicine for him from a medicine-man. If the casting-of-lots is suspicious that some one has caused the illness, he will at the same time add, "Let us and so pray," mentioning the name of the man whom he suspects. Following the advice given, the medicine-man is consulted. He promises to get medicine for the sick man and goes into the forest to search for it. Having returned, he prepares his decoctions and having first partaken of a little himself, he gives it to his patient with further instructions. The friends of the sick man having returned to the village, indirectly ask the man on whom suspicion has been cast to pray for the sick man saying, "He is covered by some spirit." The man prays, sometimes using *nkyowi* and beginning *chonde! chonde!* "please! please!" and goes on to ask *Mlungu* to take away the spirit which has covered the sick man, adding that he himself is innocent of any ill doing against the man and that any grudge he may have had against him is now forgotten.

If the sick man recovers, well and good, but should he die, there is more to be done. The morning following the burial, the relatives go to the chief and in answer to his inquiry of what they are going to do, they say they must again consult the casting-of-lots. They will choose some one who lives a long way off and is not suspicious of the death of their relative: those who go to him have not been shaved after the funeral. Much the same business is gone through as on the first occasion but, in the end, the casting-of-lots is told that they suspect some one unknown to have brought about the death of their relative. The names of all the possible persons are given, the lots cast in each case and, eventually, one is picked out as the guilty man; the casting-of-lots saying, "If I am not telling the truth, you can test my words by giving *mwai* (ordeal poison) to a fowl; if it does not die, come back and break up all my properties."

He may have gained information from his lots that the suspect is a man of power gained by some special rite, e.g. the midnight bath on the ant hill, in which case he will insist that the fowl poison-ordeal must take place on an ant hill or he will give other specific instructions. On the way back, the relatives will buy two fowls; *mwai* will be prepared by a boy who has not passed through his initiation ceremonies, and two of the party will be chosen as pleaders, one for the demand, the other for the accused. One fowl is then selected to represent the accused and the poison administered according to the conditions laid down by the lot-thrower, while the two pleaders give injunctions to it, one saying, "You are guilty; you shall die"; the other, "You are innocent and you shall show your innocence by vomiting the poison and recovering." If the fowl dies, a third man cuts off its head, saying, "I am the bearer of the dead." *Mwai* is then administered to the second fowl to ascertain whether any other persons are involved. The head of the first fowl is singed, stuck on a stick and carried back with the party towards their village. A little way outside, they halt in the bush, and send word to the headman that they are returning. He then comes out privately to see them, asking what has happened, and is told all the events in sequence.

3:Stanna D-5 (ca. 1912) 1922 FT7 Tao FT7

village had its regular place of torture and mwai drinking, two or three miles from the village. Those used by Malemya, the old Zomba chief, may still be seen. 754

A clear way is made two feet broad and fourteen feet long in the bush and here the accused takes up his position attended on either side by the two pleaders, the defending pleader on the right, the prosecuting on the left. Facing east or west or following the directions originally given by the master-of-lots, that is, taking up the position in which the accused is supposed to take a midnight bath, or practise some rite under a tree or an ant hill, etc., he is given a decoction of mwai to drink from a gourd. This decoction is made on the spot, the bark being pounded up on a stone by one of the prosecutors. The accused must have had no food that day. He then starts to walk up and down the short cleared path with the two men, one on either side of him, the one saying, "Now you have drunk mwai, you shall die as you deserve; you did in fo-and-fo," the other denying the accusations, saying, "He shall vomit the poison." He is watched by the assembled crowd who note the various symptoms of which vomiting is the first and said to be the most characteristic. After this has gone on for some time, they watch for what is called the sponge which is said to be "a ball of bile formed in the mouth and expelled by vomiting so that it bursts on reaching the ground but not before", followed often by a second ball, twenty minutes later. Should this be expelled, recovery may be expected, foreshadowed by clearing of the vision. If he recovers, he is indeed a wonderful man and is hailed on all sides. The women trill with their tongues and shout, and he is carried back in triumph; the defending pleader will swagger about and demand anything he wants for his client. 695

A fatal termination is characterized by little and non-forcible vomiting. Purging is common but said to be painless. Vision is affected and as time goes on, the spectators ask what he can see, "Do you see that over there?" indicating a hill. If he makes mistakes, then they say, "Ah, he is going to die!"

The poison may not take full effect for three or four hours. The end is ushered in by a last stage when the legs become weak; he staggers, then unable to stand any longer, falls to the ground dead, encircled by the onlookers who rush in and hurl stones upon the body, crushing it. The relatives take the mangled corpse and lay it on logs covered with grass in the bush. No other covering is permitted. It may be placed in a tree by people acting as scouts. Burial is forbidden. 741

In some cases mwai used to be burned, not being given the chance of the poison trial. This took place at a recognized spot like where. The last man to be burned by Malemya was Mtulula in 1892. Burning was also a punishment in some bad cases of murder. Such was the fate of Chingale. The man was put in a stave-stick, a pile of logs was built round him and then set on fire. 63

White-doctor. In addition to ordeal poison, another method of discovering a mwai is by "smelling out." If a number of people have died in a certain village, the inhabitants may begin to think that there is a mwai among them, and procure the services of a mbindile. 754 695 741

3:Stanton D-5 (ca. 1912) 1922 FT7 Yao FT7

784
695
791

Mbinsile is a Chinyanja word from *ku-bisa*, "to hide," referring to his custom of hiding in the village; the practice is originally *Mang'anja*, since adopted by the Yao. *Mbinsile* is often a woman and may be young.[1] She comes to stay in the village unknown to the people, lives in a watch house in the gardens and is said to go about at night when she is able to summon *wumi* persons from their houses. The fee for her services is paid beforehand. Later, the villagers are assembled and going round the company holding out flour in her hand, she calls upon Ilo-and-Ilo as the guilty man saying, "This is his 'night-name.'" The villagers all answer, "There is no one of that name in the village." She then goes round again and throwing the flour over the accused, utters his ordinary name and runs off into the bush, not to appear again. The accused may then offer to take *wumi* (ordeal poison) to prove his innocence or if it is a case of illness only and not death, he may be treated by a medicine man, the process being called *ku-lopolola*, "to take evil things out of."

A *wumi* man is sometimes said to renounce his old practices and may then be received into the company of *mbinsile*. A famous *mbinsile* near Zomba affirms that he used to be *wumi*. The mode of action of *mbinsile* varies greatly with different men; for some the ceremony is quite a minor matter; in other cases, it is an important affair.

Witch-destroyer. Where death is suspected to have resulted from *wumi*, steps may be taken immediately to catch and kill the *wumi*. For this purpose, the help of the *wundu jwanketete* is sought. *Ku-mketela* means "to break off the end of a stick"; it appears to be both a Chinyanja and a Chiyao word. The word refers to the practice of the professional witch-killer who is supposed to run a stick through the anus up the bowel of his victim and then break it off, leaving part inside. The *jwanketete* having been informed of the approaching funeral hides in the bush near the graveyard and watches the interment. After everyone has gone, he is free to put in operation that for which he has been called. The following *wundu ugwundi* is related of a celebrated *wundu jwanketete* called Angoni of Zomba. The water in which the corpse had been first washed was obtained and put in an earthenware dish. He also provided himself with a gourd containing medicines and some stones, and another gourd filled with poison made from crocodile gall to anoint the *mketela* sticks. He also had a small antelope's horn containing medicine which when smeared on the head rendered him invisible, together with the stalks of a species of millet called *mbulwe* which shoots its grains at a touch, and a whistle made from the horn of a small antelope, the *ulili*.

So provided, he proceeded to the grave, around which he drew a ring with medicine contained in still another horn. Within this circle, all was safe. This was followed by a square immediately around the grave with a stone from the gourd placed at each side, north, south, east and west. The plate of water was placed on top of the grave. The *wundu jwanketete* then anointed himself with the medicine which made him invisible to the *wumi*

[1] Cf. Scott, op. cit., p. 388.

3: Stanman D-5 (ca. 1912) 1922 FT7 Yao FT7

and sitting within the circle, he blew his whistle which was irresistible to the *nsusi* man who was then induced to come out of his house. When he had reached the grave, the water was sprinkled over him by the *jusekisela* with the millet stalk from the dish on the grave, or he was struck with the gnu's tail; in either case, he fell to the ground senseless. He was then ready to be dealt with. The *sekisela* sticks, small bamboos filled with crocodile poison, were pushed up the anus and broken off to liberate the poison. Sticks might also be inserted behind the ear or in various other spots. The *nsusi* was then beaten to wake him up; he ran off to his own village and there, a little later, he sickened and died, telling no one the cause. After death, the *ansilo* when preparing the corpse of the hitherto unsuspected *nsusi*, might find the end of the stick projecting from the anus or see the punctures elsewhere with the medicine adhering to them, and the man was revealed in his true colors. 754 695 791

At Mtwiche's village, there was a man called Liunga who professed to be able to extract the poison injected by the *jusekisela* by causing his patients to undergo a vapor bath and to drink certain decoctions. This man would never reveal the name of anyone who came to him for treatment but would brag that "trade was brisk." The symptoms of the mortal malady caused by the *sekisela* are said to be intestinal obstruction with tremendous distention of the abdomen (peritonitis). [184]

Of this same village, a story is told which, if not true, at all events illustrates the sort of thing that is believed. As has been mentioned above, whenever the *jusekisela* blows his little horn, any *nsusi* will hear it and thinking it is one of their band calling, will go to meet him. A woman of this village told how she and her husband were sitting over the fire while the evening meal was cooking, when he suddenly jumped up and said he must go outside for a bit. She remonstrated and asked him to wait for his food, but he hurried off. Later he returned, complaining of feeling very ill; his belly swelled up and he died soon after. It was said that this man was very friendly with a woman named Abibi and that when he went out into the bush, he was heard calling in a low voice, "Is that you, Abibi?" When his body was examined, two punctures were found on the left side of the chest. It was supposed that it was Abibi he expected to meet and with her enjoy a cannibalistic repast, whereas it was a *jusekisela* who had called and killed him.

This brief outline of a case of sickness, suspicion of witchcraft, death, and the consultation with the *easter-of-lots*, the witch-finder, ordeal poison, death, and the catching of the cannibal witch, has been given as a more or less consecutive story in order that it may be most easily understood. Some further details concerning the lot-easter, witchcraft, etc., must be added.

Lot-casting. Medicine men who cast lots were at one time fairly plentiful and were consulted on many matters, often of small importance from a European point of view. Chief of all were questions of witchcraft. The *modus operandi* varied in different cases. In *nsusi* and other important matters, the medicine man always used the *ukisanga* (divining in- 787

3:Stannus D-5 (ca. 1912) 1922 FT7 Yao FT7

Witch-medicine. The making of medicine against people has been shown to occupy an essential place in *usuwi*, and it plays an important part in all occultism. So by insensible grades, the ordinary use of drugs in common diseases is reached, though it is probable that very much greater faith is placed in a packet of burnt roots put under the floor of the house than in the efficacy of any concoction taken by mouth. 754 [757]

There is a general belief that by medicine extra ability verging into supernatural power can be acquired. This power in a general sense is represented by the word *ukoma* and a man so possessed is spoken of as *wundu jwa kowala*. The desire for increased power may be a perfectly natural one, such as a desire for influence and popularity as a chief, or on the other hand, the power of *usuwi* may be aimed at, or again, the knowledge of magic medicine for thieving or for any other practice. *Ukoma* is, therefore, a relative matter. The necessary medicine or initiation into the understanding of magic can be purchased from persons already practitioners, the honest herbalist merging by imperceptible degrees into the most criminal witch-doctor. A single practitioner may prescribe a charcoal dressing for an ulcer, exorcise an evil spirit by a vapor bath, sell medicine to enable the buyer to win a case at court, arrange medicine on a pathway to act as a selective love potion, or prescribe a drug to change a man into a lion. 756 787 791

Deserving of special mention are the people who thieve by the aid of medicine which they have either purchased or prepared themselves. Such a man is called *chitaka* and the medicine *wala* we *chitaka*. The active principle of this medicine is said to be prepared from the tail of a hyaena, an animal which is said to be able to enter a house where people are sleeping and kill and carry off the fowls without waking the occupants. The medicine is often carried in a hyaena's tail. The *chitaka* is supposed to approach the house he would rob and chewing some medicine in the mouth, gently blow towards it to put everyone to sleep. The door is supposed to unfasten itself and the thief is free to take what he wishes. He is even said to kill, cook, and eat food in the house while the inmates remain unconscious. A special characteristic of the *chitaka* is that whatever he lays his hands on in the house he must remove, though he does not want it, so that in the morning many unwieldy, useless objects may be found outside the hut. 791 789

There are many other magic medicines. One of these, *lwanga*, if introduced into a village, will cause the illness and death of some inmate. Anyone handling the body of the sick man or the corpse after death, sickens and dies until the whole village is wiped out. There is a man serving a life sentence now at the Central Prison, Zomba, who was convicted of having caused the death of many people in a village in Angoniland. He is said cheerfully to have admitted the power of his medicine. 754

Medicine made from a cousin is supposed to be efficacious in various ways. The blood of a cousin is instilled into the ear for otorrhoea. Drinking the water which has been used by a cousin to wash his face relieves intestinal colic. Medicine is made from the hairs of the beard of a cousin or from an *ubile* and used for chest trouble. 757 605

3:Stanzus D-5 (ca. 1912) 1922 FT7 Yao FT7

832 *Mpasi* is a love potion. Men are often anxious that women should ask them for love (*ku-pala*). A man seeing a woman whom he fancies, takes up some of the dust where she has trodden and mixing this with medicine puts it in his hair. If he meet her again, though he takes no notice of her, she will come to him.

789 When crops are harvested, a layer of the cereal is laid at the bottom of the corn-store,
241 and *usala*, which consists of medicines contained in the skull of or made from the body of
[826] a still-born infant, is then put in and the store filled. In this way, he who has only a small garden may be sure that his grain will last a long time. Similar medicine is put in gardens with the first rains to insure heavy crops. A man on the approach of the planting season should never give away seed to anyone until his own seed is put in or it may bring bad luck to his crop. This is evidently a superstition arising from the fact that if he gives seed away, he may not have enough left to raise a crop sufficient to support his family. Some people are considered "lucky at planting pumpkins, other people when they plant, reap only watery pumpkins." A man, therefore, will often ask one of the lucky people to plant his pumpkins for him. My hospital boy always got the cook to plant his pumpkins.

789 A man wishing to become a person of importance, with a village of his own, takes a
824 medicine made from a certain tree and then builds his hut in a new place, hoping people will flock to him. The tree is known as *ekukambili*. Another medicine, taken in the belief that people will flock to a man in consequence, is made from the bush called *mola*. Cf. *litula* planted at the threshold to attract visitors.

789 Conjuring. There are other performances akin to magic in the eyes of the natives,
791 which I have never had the opportunity of witnessing but which would appear to be of the nature of juggling or possibly hypnotism; some resemble the tricks of jugglers; others are more like some of the performances in India. I naturally supposed that they had been learned from men at the coast (Zanzibar), but I am assured that they belong to the Yao themselves.

Kambenje, a Yao of Chiradzulu, well-known at dances and *Unyago*, after some preliminary dancing, stands still and is covered by a cloth; when the cloth is again removed, he is discovered with a number of squealing puppies held in his loin cloth, which he then hands round. He begins to dance again and the persons to whom the puppies have been given watch him and then find they are holding excrement, not puppies. Or mud-fish are handed round and the people find they are holding women's diapers.

Another trick often performed by Kambenje was the burial of a man in the ground, covered up completely with earth; at the sounding of the drums the buried man comes running in from the back of the watching crowd.

Kasonga, a Yao of Malimya's, priest, and medicine man, after an *Unyago* ceremony used to put on his red blanket and walk over the hot embers of an enormous fire in the village open space. He admitted that he smeared himself with medicine and an eyewitness told me that when he put his feet on the hot logs, it caused a sizzling sound.

3: Stannus D-5 (ca. 1912) 1922 FT7 Yao FT7

Tingulingu was another well-known performer; he used to do the same tricks as Kambenje. He also was possessed of an elastic skin and is said to have been able "to tie his ears together behind the back of his head." 789 791

Mpechetula, a Yao of Mkanda, is a man with considerable renown. He is said to be able to produce a lion at will from a lion's tail and claw. He would offer to show this if there were any brave enough to go through with it. On a moonlight night, he would expose on the ground in a cleared space near a village the tail of a lion held cross-wise in a piece of split bamboo. At the split end of the bamboo, he would place a lion's claw and round this, a woman's belt held in position by three bamboo pegs, around which he would draw a circle of mbepesi flour. Everyone would then withdraw to a hut in which the seance was to take place. After an hour or so, Mpechetula would send some one out to inspect the lion's tail where probably all would be found intact. He might then pretend to be uninterested and sleepy and suggest that some one should go out again in half an hour. Sooner or later, a man would come back, having found the tail gone; then everyone would go out to see what had happened. The pegs would be found in place but the tail and claw gone. A little way off, the split piece of bamboo would be found and further still a bead or two from the woman's belt. These, Mpechetula would pick up, and leaving a little trail of flour on their way, all returned to the hut, while he whistled as if calling some one. Suddenly they would be aroused by the sound as of a lion brushing against the hut walls, as the beasts are known to do, and next, a loud roar. Mpechetula would immediately open the door half-way so that the people could look out into the moonlight and there, a little way off, would be the lion. It would immediately advance towards the house and then, as it prepared to spring for the door, Mpechetula would offer it some of the flour in his left hand, armed with a stirring-stick, *mako*, in his right hand. As the lion landed, he would strike it on the head with the stick and lo and behold! the lion would vanish and the tail and claw would be found in his hand.

Superstitions. Scattered throughout these notes, particularly under *Usewi* and *Disease*, mention is made of practices which show a strong belief in superstition. Below are given a number of minor beliefs, and it is interesting to compare them with many well-known superstitions in other parts of the world. 771 784

1. A child who cuts the upper incisor teeth first will be unlucky. Such children used to be killed by the Yao. (Other tribes make medicine against the threatened ill-luck.) [777]

2. A woman with polydactylism may not take food out of a corn-store. Otherwise the stock of corn will not last long. (Rudimentary sixth fingers are not uncommon.) [732]

3. An insect called *chiqwa. mesi* which lives in the mud at the bottom of pools, if killed causes the water to dry up. [823]

4. If a boy puts a water-spider in the armpit when learning to swim, he will learn quickly.

5. A man wishing to prevent rain falling on a day he is making a journey, will wrap some of the leaves of the *mimosi* tree in his loin cloth and go without drinking. [824]

824 778 be supposed to live in such trees. They are convenient natural objects for them to occupy, in fact practically the only ones to be found in villages. Trees may secondarily, therefore, be looked upon as in some degree sacred. About such trees strings or pieces of calico may be placed as an offering to the spirits of the departed. But the Yao do not erect little huts in their vicinity, hung about with strips of calico as is the custom among the Anyanja.

775 Macdonald[1] mentions the spirits in connection with Soche and other hills round Blantyre and supposes them to be the spirits of the places themselves. This I think is unlikely; they would probably turn out to be spirits bearing the names of long departed Anyanja chiefs whom the immigrant Amangoche Yao venerated just "to be on the safe side," since they had come and taken the country which long ago belonged to the former tribe. When approaching or passing any spot held to be the dwelling place of spirits, salutation is made by clapping the hands.

Spirits of the departed may enter into animals or may take the form of animals, [825] commonly lions and sometimes large snakes (python), but this belief is not so general among the Yao as among other tribes, in my opinion. An animal which is so possessed is called *liyuke*, from *lu-yuke*, "to be transformed."

[774] Apart from this habitation of inanimate objects above mentioned by *maimu*, there is nothing that points to a belief in Animism among the Yao, so far as I know. Neither hills, rocks, streams, lakes, nor trees have their own spirits, nor are they endowed by the native mind with life.

Deceased persons appear to the living in dreams, the native apparently believing that the deceased appears in his material body.

775 787 791 They believe also in revelation of wishes of the deceased through the medium of the living. The spirit of the deceased is supposed to enter into the medium. The medium, I am informed, is always a woman, never a man. From the descriptions of some of these revelation séances, there can be no doubt that they are manifestations of *la grande hystérie*. The medium works herself up into a frenzy of excitement and in her delirium gives out the name of the deceased, the voice which speaks being that of the spirit within her. She rolls on the ground and foams at the mouth, uttering the word of revelation which is generally to the effect that some deceased chief's spirit is feeling aggrieved at the neglect of his tomb; the voice may go on to say that certain practices are forbidden, or demand that certain rites be observed by the people. The spirits which possess her are generally spoken of as *masoko*, a word which, though sometimes used as equivalent to *maimu*, usually seems to [158] have rather a sinister significance. Insane persons are called *masoko* and are thought to be possessed by a spirit, and vapor baths with eucalyptus may be practiced for their cure. In the case of the death of anyone who is possessed, in answer to my interrogation, I have [761] been told that both the spirit which has entered into the man and his own *maimu* leave his body.

[1] Op. cit., vol. I, p. 76.

3: Stannus D-5 (ca. 1912) 1922 FT7 Yao FT7

As an example of another kind of intermediary may be mentioned a woman called Bimbi Chikasowa, who, though an Anyanja, was well known among the Yao of Zomba. She was consulted on many occasions about the future, about rain, or the prevention of disease. She was a woman of quiet ways and greatly respected; she had no fixed abode but was received everywhere and given food and shelter. She would sometimes disappear from the district and travel to far distant places. A son, born to her when a young woman, was lately a patient under my care, a man of about forty-eight. On one occasion she was consulted about an epidemic of ulcers among the people near Zomba. She asked all the people from the villages to go down to Lake Shirwa and to take a white fowl with them. When they had all collected, she appeared, carrying in each hand a little gourd containing *mbepesi* flour, and a small open basket on her head. She took the fowl in one hand and then proceeded to walk into the water, saying she would have to go to a little hill on an island in the lake called *Chidia Mpiri* and that she would come back in three days. She then walked on into the water and disappeared below its surface. In three days time, she returned to the village and said that the women must give up dancing the *chiponda* dance for twelve months and all would be well. 791 789 755

On other occasions she usually worked along similar lines. Consulted as to whether or not some sick person would recover, she always answered with the same formula, if she thought he would die, "The house is prepared for him and medicine would avail nothing!"

There are certain other supernatural persons or spirits to which reference must be made. *Chimela-mesi* has been mentioned above. *Manunu*, a word which Hetherwick translates as "madness, idiocy,"[1] really refers to the delusions and hallucinations which form part of the perceptions of the insane. The word also has the meaning of obsession, phobia, and intuition; thus the natives say of an ox about to be slaughtered that shows signs of realizing the approaching evil, "it has *manunu*." On the other hand, they say the hartebeest is a foolish animal that does not know what to do when hunted: "it has *manunu*, it is a deluded animal." Again, the baboon and the crow "have *manunu*"; they are possessed of senses or faculties which warn them of the approach of any enemies before they can be seen or heard; they cannot be stalked. In all these cases, the crowd of hallucinatory men pursuing some melancholic, the rats of the delirium tremens patient, and that which appears to warn the crow or the baboon, are all *manunu* and are, I think, supposed by the natives to have some kind of materialistic form. 791 828

Ndondocha: when the *wasawi*[2] do not wish immediately to devour the body of a deceased person which they have raised from the grave, they cut off the arms and legs at the elbows and knees and insert medicine into the stumps; these living-dead are then compelled by the *wasawi* to live in caves and hollow ant hills during the day and to follow them at night in their travels, "like a herd of goats," to be eaten as required. The *ndondocha* may be heard as they wander along in the night, making sounds like a cat's mew. A woman will 791 789

[1] Yao language, op. cit., p. 238. [2] Vide supra, p. 292.

3: Stanmus D-5 (ca. 1912) 1922 FT7 Yao FT7

never leave any food outside at night, not even the chaff from the grain she has been pounding, lest these most miserable of beings be attracted by it.

Chitowe is a word common to several tribes and among them appears to have various shades of meaning. Among the Wayao, the *itowe* are "the little people" of the leprechaun order. They rob the gardens and cause rot among the pumpkins; their little footprints can be seen where they have passed hither and thither; fruits and vegetables that they touch will become bitter. To prevent these disasters, the Yao, at the time when their crops are ripening, place different kinds of vegetables at cross-roads, hoping thereby to satisfy the *itowe* and prevent them coming into the gardens. As far as I am aware, the *itowe* have nothing to do with famine and are in no way connected with *Mtanga*, to be mentioned below, as Macdonald believed.[1] The *chitowe* is variously said to be "like a man but rather like an animal." He has two legs but goes on all fours.

The Yao describe another legendary race of "little people" who used to live in this country and who may still be met with, — "who knows?" They were of a very small stature, grew long beards, were very touchy, quarrelsome, and fierce, and carried spears. When anybody met one, he was immediately asked: "*Mumbonele kwapi?*", "From how far did you see me?" and it was always well to pretend to have seen the little man coming a long way off and make him believe he was considered quite a big person; if you said "Hullo, I have only just spotted you!", he would immediately spear you. They are commonly supposed to dwell on the tops of high mountains and are iron workers. They are called the *Mumbonele kwapi*.

There is no relation as far as I know between these two classes of "little people," but I think these stories go to uphold the theory recently reiterated by Hastings Guilford in his Hunterian Lecture (1914) that folk-lore fables of hobgoblins, etc., have a basis in fact. He believes that dwarf races at one time were to be found, possibly over a very wide area of the globe. In this country, I think it may be that one sees the transition from historical facts to true fairy stories.

The Anyanja have the same legend about these "little people," the *mwandi onwakuti* ("where-did-you-see-me"); it is indeed not only wide-spread throughout this country, (the Ahenga and Ankonde in North Nyasa district speak of the *mwandionenanku* who ask the same question), but there is a very similar legend among the Akikuyu in British East Africa.[2]

The *chitowe* is doubtless the *chirwei* of the Anyanja, mentioned in Scott's dictionary,[3] as Miss Werner[4] has supposed, for one finds that among the Anyanja at the southern end of the Protectorate, the *chitowe* is described as having only one side to his body so that he is invisible when viewed from the off side, thus resembling the *chirwei* who has one half of his body made of wax.

[1] Op. cit., vol. 1, p. 71.
[2] Op. cit., p. 97.
[3] M. W. H. Bunch, 'Pre-Bantu occupants of East Africa,' (*Man*, London, 1915, p. 40-41).
[4] British Central Africa, op. cit., p. 32.

nor is he "God the creator," of man or earth. He, however, receives the spirits of the dead. Should he refuse to do so, a man continues to live. When a man has recovered from some commonly fatal disease, the natives say, "*Mulungu wakanile* (refused him)!" or if he has been very near to death and then recovers, they say "*Mulungu wamunile* (spat him out)". 776

It would thus appear that among the spirit hosts there is a regular law of precedence, and presiding over all is a supreme being, but all this is so remote as to have little importance for the living. The vagueness concerning *Mulungu*, I must admit, has given rise to some doubt in my own mind as to how far he was a deity with an entity of his own in their religion of a little time ago.

Ancestors tend to be forgotten in proportion to the length of time which has elapsed since their death, unless they played some important part during their lives: then some particular one may be remembered to the exclusion of others, and to him prayers of intercession are offered. In the case of chiefs, the names of a long line of rulers may be remembered on occasions when all else about them has fallen into oblivion. It seems possible originally *Mulungu* was the oldest ancestral chief who was raised up as a supreme being but who, in the process, has lost all other attributes. On the other hand, the word often refers only to the place where the spirits dwell; this may have been the original meaning. 769 776

There is no religious worship in the proper sense of the term but only propitiation, prayer for intercession, and return of thanks for favors granted. The keynote of this ancestor worship, the sum total of their religion to the exclusion of the belief in a supreme being, is fear. We have seen at the funeral that everything is done to lay the spirit at rest. The people wish never to hear of the spirit again. It is chiefly with a view of averting some evil that worship takes place or with a view of expiating some crime that sacrifice is made or to alleviate some suffering that communication is sought with the spirits. It is a question of, "Do us no harm, do not vent your wrath upon us for what we have left undone," rather than "Keep us from doing evil, save us from being our own enemies." It would appear to be a religion of spite, not of love and kindness, though there are glimmerings of a search after "a hand to guide and protect," as in the prayer given below and also in the action taken when removing a village. 769 [771]

As a corollary of this system of ancestor worship, there is no real priesthood. A man asks for favors for himself; the head of a family petitions a deceased father or some more remote ancestor of greater importance; the headman intercedes on behalf of the village with the spirit of a predecessor; a chief takes the place of high priest on the occasion of a tribal supplication to a former ruler, though he may be replaced by some one of his wise men who acts as intermediary. [773]

Some form of sacrifice is offered with the prayer, and often some omen is sought as a sign that the prayer is granted. For this purpose, flour made from millet called *ubepusi* (*ausuba*, Chin.) is commonly used. The word *ubepusi* probably includes any sacrificial offerings.

2: Mitchell E-5 (1946-1949) 1956 FT7 Yao FT7

the Shire River to within about 15 miles from Liwonde's headquarters, and though he frequently tours his chiefdom in this area I have never known him to cross his boundary. The position of Nyambi here is interesting in that originally Nyambi's chiefdom was part of the Liwonde district. It was made part of this district in the early days of the Administration when Nyambi II, Nkata's sister's son who founded the chiefdom, opposed the reigning Jalasi and moved into the area where the chiefdom is now situated. The implication of Nyambi's being in Liwonde district was that he had to sit on District Councils in Zomba with Kawinga and Liwonde instead of with Jalasi in Fort Johnston. I understand that since the original Nyambi died his several successors have made requests to the Administration to be included in the Fort Johnston district. Finally in 1948 the request was granted and Nyambi's chiefdom was once more linked with his perpetual son's in Fort Johnston district. 631 643

The opposition of the chiefdoms as wholes appears in other situations as well, often when it is not expected. For example, there are two tobacco markets in the area studied. One is in Nyambi's area and the other is about 25 miles away at Mlomba's village in the extreme south of Kawinga's area. Mlomba is a uterine brother of the present Kawinga. Chiwalo's chiefdom abuts Nyambi's and tobacco growers need to transport their produce only six or seven miles to the market in Nyambi's area. Yet several growers told me that they were taking their produce the 25 miles to Mlomba market because they felt in some vague way that the Chiwalo people got lower prices for their tobacco in the Nyambi market than the Nyambi people.

The cleavage between the chiefdoms is also expressed in their religion. Kawinga, Liwonde, Jalasi and Nyambi are all Moslems and very few of their followers are Christian. Malemia is a Christian and very few of his followers are Moslems. But between Kawinga and Liwonde on one hand, and Jalasi and Nyambi on the other hand, there is a cleavage in terms of a schism among the Moslems. One group, the *twaliki*, became centred at Jalasi's court village Majuni. The *twaliki* believe that Islamic devotions should be accompanied by loud singing and chanting of Arabic tracts and by particularly vigorous dancing. Even at funerals this type of prayer is required. The other sect, the *sukutu*, centred at Kawinga's and Liwonde's court villages, 631 643 795

631 advocates the more orthodox type of Islamic devotion in which
643 a quiet restrained manner is emphasized. As far as I know the
twaliki sect are confined entirely to Jalasi's chiefdom and the
745 *sukutu* to Kawinga and Liwonde. In this matter, Nyambi's people side with Kawinga's and Liwonde's.

On the other hand, local informal organization is well de-
631 veloped so that Chiwalo who is at the point of juxtaposition of
643 Kawinga, Liwonde, Nyambi and Jalasi chiefdoms, may try cases
692 involving headmen from any of these areas, and they usually accept his arbitration. His is the nearest court house. The actual boundaries of the four areas, however, are very clearly recognized and Chiwalo realizes the limits of his jurisdiction. Though he may arbitrate in a difference between headmen, he would not dare to apportion land outside his area. Headmen living on the boundaries of two chiefdoms arbitrate in each other's cases; the villagers under them intermarry. A village in Chiwalo's may
621 procure garden lands in Jalasi's area, and children may be initiated
631 at ceremonies held by headmen in other chiefdoms. There is no
643 clear break in the normal social relationships of people across the boundaries of chiefdoms, and their members interact as freely with each other as members of two villages of the same chiefdom. The cleavage between the villages on different sides of the boundary of a chiefdom becomes apparent only in special situations.

631 The formal relationships of the chiefs, set by the history of
643 their conquests and their kinship, and incorporated in and slightly modified by the Administrative framework, are overlaid by an informal local organization where the interaction of village headmen only conforms to the formal pattern when no agreement can be reached.

The Position of the Modern Chief

643 In ritual situations a chiefdom is clearly differentiated from its
769 neighbours, and many of these situations arise in the cult of
782 tendence on the ancestor spirits. The ancestor cult has fallen away almost completely among village headmen, but among the chiefs it is still strong, and appears particularly in the rain-prayers and the initiation ceremonies. Later, I shall discuss at length the importance of the chief's sanction before headmen may conduct initiation ceremonies. This is because the spirits

2: Mitchell E-5 (1946-1949) 1956 FT7 Yao FT7

622 hand, all villages tend to disappear in time. We should there-
563 fore expect more of the headmen who came in during the
167 earlier decades to be forgotten, and the trend should be more pronounced than it is. In fact we know from other sources that immigration of the Nguru, who represent about one-half of the Newcomers, was greatest before 1930, and it is almost certain that the figures do reflect the change in the amount of Nguru immigration, and that the factors which may operate against the trend are not important. As a whole the set of figures suggests that immigration is slowly coming to an end.

622 The Aborigines are all Nyanja. Among the Invaders, 70·2 per
563 cent are Yao, 25·9 per cent are Mpotola, and the remainder 3·9 per cent are Nyanja and Nguru. The Mpotola Invaders are practically all in the Ngokwe and Chikweo areas, so that in the other areas (i.e. in Liwonde, Kawinga, Chamba and Mposa) the Yao represent 94·9 per cent of the Invaders; the remainder are Mpotola. Under Ngokwe and Chikweo who are Mpotola chieftains, 54·5 per cent (48 of 88) of the Invaders are Mpotola, and 37·5 per cent are Yao, and the remaining 8·0 per cent are Nyanja and Nguru. Among the 486 Newcomers, 35·8 per cent of the headmen are Yao, 15·4 per cent Mpotola, 43·8 per cent Nguru and 4·9 per cent are mainly Nyanja. In general, therefore, we may say that the Aborigines are all Nyanja; the Invaders are Yao in the major area and Mpotola in the other area; and the Newcomers are predominantly Nguru from Portuguese East Africa, though there is a fair proportion of Yao who have come from other Nyasaland districts.

There are significant differences among the three categories of
622 headmen in their religious affiliations. In general there are more
•715 Moslems (71·8 per cent) among all headmen than Christians or
787 Pagans. But there are more Moslems among the Invaders than among either the Aborigines or the Newcomers.[1] There are more Pagans among the Newcomers, but the proportion of Christians among the Aborigines and the Newcomers is about equal (25·0 per cent and 21·9 per cent). These differences in religious affiliations are consistent with the different historical backgrounds of the two groups. The Invaders are the descendants of the Yao slavers, who in the past had been in intimate

[1] Invaders = 91·1 per cent; Others = 63·9 per cent; Diff. of per cent = 27·2; S.E. of diff. = 3·7; C.R. = 7·2; $p < 0{\cdot}0001$.

2: Mitchell E-5 (1946-1949) 1956 FT7 Yao FT7

TABLE VI

RELIGIOUS AFFILIATION OF ABORIGINES, INVADERS AND NEWCOMERS HEADMEN

622
785
797

Religious Affiliation	Numbers			Total	Percentages			Total
	Aborigines	Invaders	Newcomers		Aborigines	Invaders	Newcomers	
Moslems . .	17	184	296	497	70·8	91·1	63·3	71·8
Pagans . .	1	4	68	73	4·2	2·0	14·6	10·6
Church of Scotland .	3	10	59	72	12·5	5·0	12·7	10·4
Roman Catholic .	2	1	33	36	8·3	0·5	7·1	5·2
Other Christians .	1	3	10	14	4·2	1·5	2·1	2·0
Total . .	24	202	466	692	100·0	100·0	100·0	100·0
Unknown .	1	3	20	24				
	25	205	486	716				

Combining Roman Catholic and other Christian totals.
$n = 6$; $\chi^2 = 36{\cdot}48$; $p < 0{\cdot}00001$.

contact with the Arab slave-traders and had taken over Islam from them. To-day the chiefs are still frequently called 'sultan'. All the chiefs in the Machinga area are Moslems except possibly the Malemia who was installed in 1947. He was brought up as a Christian but the strong Islamic tradition behind his status is reflected in the star and crescent on his ceremonial headdress. The Nyanja, however, were influenced by the Missions from the start and the Nguru were not as directly concerned in the slave-trade and were therefore less affected by Islam. They have been easily converted to Christianity. Among them too there are more Pagans. The difference in religion here is largely a reflex of the political relationships of the headmen. In other words, the Yao stoutly maintain that they are Moslems merely because Islam is one of the distinguishing marks of the Yao and of the Invaders in particular. It would be difficult for some of them to maintain their point in face of strict Moslems, for many of

2: Mitchell E-5 (1946-1949) 1956 FT7 Yao FT7

622 them follow the tenets of Islam in only the most cursory way. An Nguru therefore admits to being a Pagan more readily than 785 a Yao, because he cannot identify himself with the Invading 787 group.

Kinship with the Chief

692 The most important way in which the three categories differ, however, is in the degree to which they are associated with the 693 chief. While the Invaders are identified with the chief because of their association with him in the invasion, they are also tied to him to a greater degree by various kinship links than the other categories of headmen.

Although the exact composition of the Invading groups will never be known, it appears from the accounts of old men, that the groups were made up primarily of the chief and his younger brothers, together with their sons and slaves, and some unrelated followers. Other chieftaincies and village headmen have sprung from the chief's lineage. For example, Kawinga was the leader who brought the present Kawinga-Liwonde group into Nyasaland. The first man to be called Kawinga left the Lujenda River where he was living with an elder relative called Nsanama, whose exact genealogical connection I have never been able to determine. Accompanying them was Liwonde, a younger brother of Kawinga. As they passed through the country just west of Lake Chiuta they encountered the Mpotola under Chikweo, and these joined up with Kawinga and his relatives and went to Kongwe on the west side of Lake Malombe (in the present Kalembo's area). From this place they were displaced by the Ngoni and returned east and south to the Chikala Range where they displaced Malemia and occupied the heights. Subsequently, Liwonde left the mountain and went to live on the Shire River where the old Government station used to be. From this point on, Kawinga and Liwonde seem to have acted almost independently. Nsanama seems to have stayed with Kawinga. Chamba who was the son of the first Kawinga now set himself up as a chief on the south side of Chikala and Chaoni. Mposa, the son of the first Liwonde, moved to the shores of Lake Shirwa and set himself up there. Chiwalo, a sister's daughter's son of the first Kawinga, set himself up on the northern fringe of the area. Recently Stora, a sister's daughter's daughter's

2: Mitchell E-5 (1946-1949) 1956 FT7 Yao FT7

the last rite the owner of the oblational basket exacts a payment of threepence or so from each parent. The headman does gain financially from the initiation ceremony, but it would be wrong to imagine that this is the only reason why he should want to have the right to hold it. The competition for the rights, which are limited to a few, is part of the general political process whereby village headmen compete for privileges and advantages over their fellows.

Village headmen may hold either the boys' or the girls' initiation ceremonies, or both. Sometimes, when they hold both, they delegate the girls' ceremony to a younger brother or some other relative without referring to the chief. For example, Kawinga's clan relative and important retainer, Ngalawanga, had the rights to both initiation ceremonies, and he allowed his perpetual 'son' Isa [1] to hold the girls'. Also in Nyambi area, Majaja, who had both initiation rights, allowed his perpetual 'son' Nantunga to have the girls' ceremony. It is generally conceded that the right to hold the boys' initiation ceremonies is more valuable than the right to hold the girls'. H. L. Duff, writing in 1906, had also noticed this when he wrote:

> The respective ceremonies seem to be considered as on a somewhat different footing, for the boys' *inyago* can properly be held only at the village and under the patronage of, so to say, the paramount chief of the neighbourhood, whereas the girls' initiation may take place under the auspices of an inferior headman. This distinction is still jealously observed and any breach of the chief's privileges is apt to lead to bitter dispute.[2]

The sanction the chief holds over the headmen in this respect is mystical. A village headman believes that the initiation will be a success (that is, that the initiands will be free from the harm of wild beasts and illness, or the circumcision wounds of the boys will heal quickly and well), only if the approval of the chief's ancestors is obtained. He cannot hold the initiation ceremonies, unless he has obtained the basket from the chief.

Most people still follow tribal initiation customs, but in the extremes of the area in which I worked, religious ideas are bringing about a change. In the north in Jalasi's area where Islam

[1] The first Isa was the son of Ngalawanga and this relationship is preserved by the modern incumbents of the headmanships. See Chap. V, p. 122.

[2] Duff, H. L., *Nyasaland under the Foreign Office* (London, 1906), 312.

2: Mitchell E-5 (1946-1949) 1956 FT7 Yao FT7

is most powerful, there is a tendency for the Islamic initiation ceremony for boys, *fanda*, and the Islamic initiation ceremony for girls, *namda*, to displace the tribal equivalents, *lupanda* and *ciputa*. These Moslem initiations are conducted by Moslem teachers (*mwalimu*) and are not controlled by the chief. Though it also involves the circumcision of the boys, *fanda* is very much shorter and the boys are secluded for only a week. Some say it is becoming more popular because it is less expensive for the boys' parents. In Chiwalo's area the two ceremonies are run concurrently. The boys and girls go through the normal segregation rites at the beginning of the ceremony, but an *mwalimu* circumcises the boys according to Islamic practice. At the aggregation rites at the end of the period of seclusion, the star and crescent appears as one of the symbols along with the whale (*namungumi*), antelope (*mbalapi*), leopard (*ziwuwi*), and the other tribal effigies which are shown to the boys. Christianity in the south has had a similar effect. The Missions actively discouraged initiation ceremonies in the past. Many of the people in Mposa's and Malemia's area have dropped the custom, or have integrated prayers and other parts of Christian ritual into the ceremonies, though circumcision is steadfastly retained. The effect of these changes is that the important ritual control the chief had over the ceremony has been undermined, and so the prestige attached to it has also begun to fade in these areas. What I describe about the prestige of village headmen and the rights they have to initiation ceremonies is only partially true, and is falling away daily. The correlation I seek to establish is also disturbed by the fact that among the Nguru there is a slightly different initiation ceremony (*ridodete*) for boys. Most Nguru send their boys to the Yao initiations but there are still some who hold their own traditional ceremonies. These are not within the mystical control of the chief so that some Nguru headmen are outside the competition for the initiation rights. I should say, however, that most compete with the Yao for Yao initiation rights so that this factor is not as disturbing as appears at first sight. In addition, village headmen who move into a new area usually must obtain the permission of the chief before they may use the initiation rights they hold before coming into the area.

There are other indicators of the general high rank of village headmen. Junior headmen, like commoners, must give a special

2: Mitchell E-5 (1946-1949) 1956 FT7 Yao FT7

TABLE XX

WHO INITIATION RIGHTS WERE GRANTED TO NEWCOMERS AND INVADERS

622
643
554
881

Type of Initiation Right	By early Chiefs		By recent Chiefs*		Total
	Invaders	Newcomers	Invaders	Newcomers	
Both init. . .	8	6	3	2	19
One init. only .	9	10	3	14	36
Total . . .	17	16	6	16	55

* This is obviously a crude classification. I have taken roughly 35 years as the dividing line. As the early chiefs I have classified all the Kawinga before and including Kawinga V who died in 1915; all the Liwonde before and including Liwonde III who died in 1901; all the Ngokwera before and including Ngokwera IV who died in 1905; all the Mpeme before and including Mpeme II who died in 1913; and all the Chikwere before and including Chikwere II who died in 1914.

In other words, recent chiefs have been granting single initiation rights to Invaders in the same proportion as they have been granting both rights, but they have been granting Newcomer headmen the right to hold only one ceremony more often than the right to hold both. Of the six sets of rights to initiation ceremonies granted by recent chiefs to Invader headmen, three were rights to hold only one ceremony, while 14 of the 16 initiation rights granted to Newcomer headmen were for one ceremony only.[1]

622
554
881
715
619

Headmen do not make use of their bonds of common religion or tribe with the chief in their competition for initiation rights. Table XXI sets out the numbers of headmen of different religion. There is a substantially smaller proportion of Pagan headmen (9·7 per cent) holding initiation ceremonies than either Christians (25·5 per cent) or Moslems (24·4 per cent).[2] Most Pagans, however, are also Newcomers so that this difference is actually a reflex of the generally lower rank of Newcomers. Table XXII sets out the number of headmen of the chief's tribe and of other

[1] i.e. 30·0 per cent against 87·5 per cent; diff. of per cent = 57·5; S.E. of diff. = 20·08; C.R. = 2·87; p = 0·0014.

[2] Pagans = 9·7 per cent; Others 24·6 per cent; diff of per cent = 14·9; S.E. of diff. = 7·94; C.R. = 1·88; p = 0·0605.

2: Mitchell E-5 (1946-1949) 1956 FT7 Yao FT7

632
654
681
715
619

TABLE XXI

THE DISTRIBUTION OF INITIATION RIGHTS AMONG HEADMEN OF DIFFERENT RELIGIONS

Type of Initiation Holder	Moslems	Christians	Pagans	Total
Both init. rights . .	25	4	1	30*
Boys' init. rights only .	12	4	—	16
Girls' init. rights only .	31	6	2	39†
No init. rights . . .	211	41	28	280‡
Total	279	55	31	365

$n = 6$; $\chi^2 = 5.05$; $p = 0.53778$.

* Excludes 1 headman whose religion was unrecorded.
† Excludes 4 headmen whose religion was unrecorded.
‡ Excludes 2 headmen whose religion was unrecorded.

TABLE XXII

THE DISTRIBUTION OF INITIATION RIGHTS AMONG HEADMEN OF THE SAME AND DIFFERENT TRIBE AS THE CHIEF

Type of Initiation Holder	Same Tribe	Different Tribe	Total
Both init. holders	20	11	31
Boys' init. holders only . . .	7	9	16
Girls' init. holders only . . .	23	20	43
No init. rights	156	126	282
Total	206	166	372
% Init. holders	24·3	24·1	24·2

$n = 3$; $\chi^2 = 0.17$; $p = 0.34165$.

tribes who hold initiation rights. Once again the proportion of headmen of the same tribe as the chief who hold initiation rights is the same as that of headmen of different tribes from the chief. We may say, therefore, that membership of tribe is not an operative factor in the granting of initiation rights.[1]

[1] The factors contributing to the granting of initiation rights are obviously all interrelated.

1: Tew E-4 (no date) 1950 FT7 Yao FT7

return to the *lupanda*, where the initiates are welcomed by their friends. An essential part of the ceremony which takes place at this stage is the exhibition of animal shapes made by the *n'mizwa*, with mounds of earth outlined in flour. These animal shapes differ from lodge to lodge. On the last night before the return to the village the initiates undergo a ceremonial bathing, each boy being carried to the stream by a woman, who thereafter is addressed as 'elder sister'. Finally, with new names, and freshly oiled and decorated, they march to the chief's village to be redeemed by him from the *n'mizwa* with gifts of cloth. After initiation it is a deadly insult to call a boy by his child-name. All who pass through initiation together consider themselves bound by mutual obligations of hospitality.[1]

Girls' initiation takes place in three stages. First, there is *ciputa*, the general initiation before puberty, which corresponds to the boys' *lupanda*. It takes place at the same time of year, and though it lasts for less than a week, its conclusion is celebrated at *lupanda* jointly with the conclusion of the boys' initiation. A hut is built in the bush, like the long dormitory of the boys, and four days are spent in dancing and singing. Each girl (aged about eight years) is accompanied by a sponsor, a woman friend who continues to be her mentor during subsequent rites, and who assists in giving the girl instruction in her womanly duties. At the end the girls are bathed and anointed, dressed in new clothes, and each is carried to *lupanda* by her sponsor. Here they prove their skill in dancing and receive gifts from their friends. Ritual defloration follows the *ciputa* initiation.[2] Among Mohammedans, clitoridectomy used to be performed by a woman operator, but, it is said, was discontinued in about 1903 on account of the heavy mortality.[3]

After this first general celebration, first pregnancy and first birth are the occasions of separate rites for each girl. According to some informants there were once two ceremonies connected with pregnancy. One, for the young married men whose wives had not yet conceived, used to take place at the same time as *ciputa*; each man was attended by a woman sponsor not his wife, given good advice, and put through various tests of manhood. Mitchell does not confirm the present existence of this ceremony, but in the old days if a man was betrothed or married to a child going through her *ciputa* he had to accompany her.

The *lisiwo* ceremony takes place when a young married woman quickens with child for the first time.[4] The woman, with her sponsor and the married women of the neighbourhood, went out in procession for a ceremony of singing and dancing and instruction to the young couple, followed by a feast. Nowadays no men are allowed to attend *lisiwo*. A child born of a woman who had not undergone this rite used to be buried alive; nowadays her *anyesu ndumba* is charged by the chief.

Finally, six days after the first child is born, its naming ceremony forms a last initiation rite for its mother. The husband is formally led into her hut by her sponsor and the married women of the neighbourhood, and the child is taken out for the first time to the accompaniment of feasting and dancing.

Most Yao men and women act as sponsors of initiates at least once, and all parti-

[1] Sources for boys' initiation: Swanson and Dewey, 1913; Werner, 1908, pp. 124-6; Swanson, c. 1900, pp. 127-63; Hodder, 1933, pp. 19 sq.; Johnston, 1897, p. 409; Weule, c. 1900, p. 304.
[2] Swanson, c. 1900, p. 159. [3] Ibid., c. 1910, p. 198.
[4] Ibid., c. 1900, p. 172; Hodder, 1933, p. 23, *ulile le ciwanda* (Sally).

10: Sanderson D-5 (ca. 1920)1922 FT7 Yao FT7

A Note on Ceremonial Purification among the WaYao, Nyasaland. 55

By Meredith Sanderson, M.R.C.S., F.R.G.S.

One of the effects of European influence in Africa is the breaking up of tribal organization and discipline. The rights of the individual being no longer subordinated to the common good, customs formerly observed by the village community as a whole die out, while those affecting the individual are still practised. 191

This tendency is well seen in the ancient ceremonies of purification among the WaYao, which are now rarely performed collectively, though the native, however highly "educated," still goes to the doctor to obtain the necessary medicines for removing, for instance, the contamination caused by contact with a corpse. [75] [764]

These collective ceremonies have already been described by various writers in respect of both Nyasaland and elsewhere;* but the Yao rites have not, I think, been given in detail, and the following notes may not, therefore, be altogether valueless. 114

The *Pyajila* ceremony (*kuppajila*, "to sweep") is common to most Bantu tribes. In its simplest form it used to be performed annually by the WaYao, at the beginning of the twelfth month, count of the months (lunar) being kept by means of a "calendar."‡ The whole village is thoroughly "spring-cleaned," all rubbish 796 [191] [805]

* At Sia, where the game is played — All Souls' night is the anniversary, Father Dornelas Myer tells me, the song in Spanish runs:—

Yaun, yaun, quando tu vengo,
Yaun, yaun, hay vinin.

Yaun, yaun, vino yon ustan,
Yaun, yaun, I shall not be there any more.

Words imported, presumably, to the hidden hall.

† See Sanderson, M. C., "The Bali Indians," pp. 333-341, XXIII. *Annual Report, Bureau American Ethnology*, 1904.

‡ Frazer, "Golden Bough," II., 178, sqq.

§ A "calendar" consists of a string tied to two pegs in the wall of the house, or between two poles, on which are threaded twelve pieces of reed, bamboo or cornstalk. One of these is moved to the other end of the string each time a new moon is seen. [24]

10:Sanderson D-5 (ca. 1920)1922 FT7 Yao FT7

THE WHOLE VILLAGE IS THOROUGHLY "SPRING-CLEANED", ALL RUBBISH

swept up, the ground round the houses is hoed clean, and the interiors remodelled.
(364) Ceremonial beer is brewed by the head-wife of the chief, and after this has been drunk the ashes of the fire used in the brewing are carefully collected and taken to a meeting-place ("cross-roads," or "diverging of paths") where they are deposited.
(763) The chief, as representative of his people, bathes in special medicated water, a decoction made from the bark of *ng'ungu* and *mkuru*, and the root of *mpingo*.
(327) This completes the ordinary annual ceremony, at which new fire is not made.
(622)

On certain special occasions a more elaborate ritual is carried out; such occasions are the death of a chief, a threatened epidemic of infectious disease, a murder (especially by shooting) and the frequent occurrence of quarrels in the village.

In such circumstances, in addition to the ordinary *ypujilo* ceremony described above, the porridge sticks of the whole village are removed and all fires extinguished. The discarded sticks and all ashes of the old fires are carried to the meeting of paths, where the former are stuck upright in the ground and the ashes piled together;
(372) this is done in procession, all the people taking part. On their return to the village new fire is made by friction by either the chief or his younger brother—usually the latter; fire procured in any other way would nullify the proceedings. Finally
(763) all the people bathe in the medicated water used only by the chief at the ordinary ceremony.

751 In addition to this special form of the *ypujilo* ceremony, another rite is sometimes
776 performed after the occurrence of a murder or as prophylactic against the spread of epidemic disease. The doctor first makes a kind of trough (*lukungwa*) from the bark of *mtondowalo* or *mpingo*, and procures a *chichiko* (or *chipungulo*) basket—used as a strainer in salt-making. Having collected his medicines he proceeds to the bank of the stream near the usual bathing-place of the village and digs a shallow hole, in which he places the basket; in this he puts the leaves of a certain thorny shrub and covers the whole with the trough, which is banked up with earth so as to be perfectly firm. He then puts his "medicines" into the trough; these are, first, the head of an iron hammer and a piece of slag, both from a smelting furnace. On top of these he puts pieces of the root of a certain tree which has many and particularly sharp thorns, and bits of bark from two trees peculiar for having very straight stems. Having distributed these evenly along the floor of the trough, he fills it with water and then proceeds to construct an arch over the end of the trough furthest from the stream. Two long poles, cut from a kind of tree particularly rich in sap, are planted in the ground, one at each side of the trough and close to it; these are bent over towards each other, and fastened together by means of a strip of their own bark. A bamboo is now planted alongside each, and similarly tied to its fellow. During all these preparations and throughout the ceremony it is essential that the doctor has no knots in any part of his clothing.

The preparations are now complete, and when all the fires in the village have been extinguished the people go in procession to the spot where the doctor awaits them. All must be purely clad and must have no metal about them.

(622) The chief opens the ceremony. He steps into the trough and taking some of
(763) the medicated water therefrom in his hands he rinses his mouth with it. He then offers a prayer to the spirits of his ancestors, first stating the emergency and detailing the measures which are to be taken to deal with it (new fire, sweeping, discard of porridge-sticks and shooting). The prayer over, he splashes the water in the trough over his body and passes through the arch, first throwing some gift (beads or, in more modern times, money) into the trough. These gifts, presumably intended as an offering to the spirits, are the perquisites of the doctor, and everybody
(756) is supposed to contribute in turn.

10: Sanderson D-5 (ca. 1920)1922 FT7 Yao FT7

The men and boys now pass through the arch in order of seniority; each splashes himself with the water in the trough, but neither speaks nor rinses the mouth. The women come next, led by the head-wife of the chief; the latter rinses her mouth and, instructed by the doctor, repeats a prayer similar to that offered by her husband. The remainder of the women merely splash themselves, like the men, before passing through the arch. All then return to the village, where the *ppajila* is continued. 751 796

Finally the doctor takes the hammer-head from the trough and hands it to the chief, who rubs the haft into it, and, a hoe having been placed on the ground, goes through the form of forging the latter by beating it with the hammer. He then scrapes the ground with the hoe as if clearing a piece overgrown with grass; he does not dig with it as in hoeing up the ground for planting seed. After this rite the chief again bathes in medicated water similar to that in the trough, and the ceremony is complete.

Whereas the *ppajila* ceremony and its adjunct, the rite of the arch, are now but rarely performed, no Yao will omit the rite of purification after a death in his family. This ceremony consists of two essential parts, both protective against the *ndoko*, a disease characterised by dropsy and supposed to be contracted by contact with a corpse, or by association, especially by sharing a meal, with those who have been in such contact. The first of these parts is bathing in certain medicines, which protects the bather from *ndoko*, and the second consists of a sort of communion meal, shared by all friends and especially relatives with those who have been contaminated, and designed to protect those friends and relatives. [178] 751 764 796 783

The decoction for bathing is made by soaking the roots of *Isopodendrali* and *Isodendrale* in water, together with the bark of *mbawaw*, one piece each from the east and west aspects of the tree; the water assumes a reddish tint, and the whole body is bathed. 751 783 829 765

The communion meal consists of porridge made from any kind of flour or of rice, and some squash beans. In the latter some scorched and powdered root of *mwandangalala* is mixed, with a little salt. All near relatives of the deceased must partake of this meal, as well as their wives and their near relatives; part is carefully put aside for the use of any relative unable to be present at the ceremony. [262]

Latterly, since the spread of Islam among the WaYao, this rite has become confused with the distribution of food to the poor at the funeral of a Muslim, and the Arabic word *sadaqa* ("charity") is now generally used for it, to the exclusion of its wider, correct meaning. [177] [777]

It may be mentioned here that after the death of a child the father is denied access to his wife for a period of about three weeks, and the first act must be one of entire interruption. 765 783

MEREDITH SANDERSON.

1: Tew E-4 (no date) 1950 FT7 Yao FT7

even competing with the Arabs for the inland trade.[1] At some uncertain date there were two migratory movements away from the original home of the Yao. The first was a scattering from Hill Yao to surrounding hills, possibly due to internal dissension.[2] The next movement was caused by an attack of the Makua between 1850 and 1870.[3] One party moved northward, finally settling in Tanganyika, as has been mentioned. Four parties moved south into Nyasaland.

(a) *Achisi Yao*, who first moved from Mwombe to Mchisi hill, and then to Nyasaland, where they are represented by those under Katuli Native Authority.

(b) *Amasanings Yao*, who first moved to Lisanings hill, near the Lutwisi river, and then to the south-east of Lake Nyasa, where their descendants are now under Makanjira Native Authority.

(c) *Amangoche Yao*, first went to settle at Mangoche, near Fort Johnston. They were later driven out of Mangoche, by the last group, and scattered.

(d) *Amachinga Yao*, first went to the vicinity of Mandimba hill, near the source of the Lujenda river. They were ousted from this fertile valley by the attacks of the Lomwe, and came into Nyasaland in four parties.

One party of Machinga Yao under Nkata (later called Jalasi, or Zarafi) attacked the Yao at Mangoche, drove them south and themselves finally settled there. Another party under Nsamala came with Nkata as far as Mangoche, then turned off to Chiusi hill in the Fort Johnston area. A third group, under Malemia and Mtumanja, moved down to the Domasi valley via Isule hill, where they were attacked by the fourth Machinga group, under Kawinga. The latter had also accompanied Nkata's party as far as Mangoche, then crossed the Shire river to the west; here they were attacked by the Maseko Ngoni under Chidiamanga and moved south-east to Chikala, which they occupied until defeated by the British. Liwanda, the brother of Kawinga, moved to the Shire river.

The Amangoche Yao, after they had been scattered by the Amachinga, settled some in the Chimanda part of Dedza district, some at Mount Zomba, some migrated to Ndirande hill near Blantyre, some to Ilache hill, some to Chiradzulu, Nguludi, Malawi, and Ndindo hills. These Amangoche Yao constitute about half the Yao population in Nyasaland.[5]

The Yao invasion of Nyasaland was not an organised military expedition, like that of the Ngoni. The first immigrants came peacefully in small kinship groups. They took advantage of Nyanja factions to consolidate their position, until, by 1876, when the Church of Scotland Mission was established at Blantyre, the Yao were a ruling class dominating the earlier inhabitants.[6] At the same time they vigorously carried on their slaving activities. In 1893 Thompson noted that the fertile country of the watershed between the Ruo and the Shire rivers was uninhabited because of Yao raids.[8]

The Yao of Nyasaland suffered from Ngoni raids, but were never subject to them. Several tributes have been paid to their soldierly qualities,[7] and indeed it took five years from 1891, when the Protectorate was declared, before the Yao were subdued and the slave trade, to which they had been principal parties with the Arabs, sup-

[1] Burton, 1872, p. 30. [2] Abdallah, 1919.
[3] Hetherwick, 1922, p. 3; Murray, 1929.
[4] Historical notes in unpublished administrative papers.
[5] Du Plessis, 1929, pp. 198 and 302.
[6] Murray, 1897, p. 19, and Stigand, 1909. [8] Thompson, 1882, p. 99.

1: Tew E-4 (no date) 1950 FT7 Yao FT7

Land Tenure

The rules governing land tenure were those which would be expected of a society which suffered from no land shortage. A man was entitled to as much land as he could cultivate, the limitation being that he should consult the headman as to his neighbours' boundaries. Abandoned gardens could only be taken up with the permission of the original cultivator.[1] 423

MAIN CULTURAL FEATURES

Religion

The Yao are largely Islamized. Codrington remarked that the perpetuation of this faith was distinctly antagonistic to British influence, and it received considerable attention from chiefs and headmen. Schools for the instruction of youth in reading and writing Swahili in Arabic characters were established in nearly every village, where also prayers were made at regular intervals in the day. The Moslem fasts and feasts were also observed, and the Yao were not inclined to embrace Christianity.[2] Their conversion to Islam did not take place till the nineteenth century, long after their first introduction to the Arab traders at Kilwa and Zanzibar, although they had adopted Swahili modes of dress much earlier.[3] 771 787

According to Hetherwick, Islam is strongest on the lake shore and on the east border of Nyasaland, chiefly round the old slave-trade centres. Makanjira's on the south-east side of the lake, and Domira Bay on the west, were the centres of Moslem propaganda. The Moslem population around Zomba and Blantyre consists mainly of Yao men, who have built themselves mosques in their own villages, or use the large mosques of Indian Moslem merchants. In the west districts, lower Shire, Ruo, central Shire, Likongwe, Fort Manning, the Moslem population does not total more than 732. In the districts round Fort Johnston and Kotakota, the Moslems are one-ninth of the total population, while in Zomba district they number one-fifth.[4]

The Yao pagan religion was a form of ancestor worship. Apart from diviners and medicine men, there was no regular priestly profession. Intercession with the ancestors was performed by the chief, on behalf of the chiefdom, by the headman on behalf of the village, and by the head of the matrilineal kin for his dependents.[5] A man was qualified to approach his ancestors individually only if he had been initiated and had a house of his own.[6] 771 769

Some of the ritual duties of the chief have already been mentioned. When his people were visited by drought or epidemic, or when he fixed the day for the beginning of the millet harvest, he made an offering of flour and of beer poured into a pot in the ground at the grave of a dead chief. The village headman made similar offerings to the spirit of his dead predecessor. The spirits of the dead Nyanja chiefs, ousted by the Yao invasion, were regarded as still powerful in the homeland of their people. For instance, Kangumba, whose shrine was on Mount Soche, used to be appealed to for rain, and on the principle that the most appropriate mediator between a dead man and the living is a descendant of the former, the Yao chief, Kapeni, when he wished to propitiate 771 631 622 775 782

[1] Macdonald, 1882, vol. i, pp. 177-9; Swanson, 2, 1923, p. 280.
[2] Codrington, 1898, p. 310; see also Shepiro, 3, 1893.
[3] Young, T. C., 4, 1932, p. 37.
[4] Hetherwick, 4, 1907, p. 129.
[5] Werner, 1906, p. 270; Swanson, 4, 1922, p. 311.
[6] Macdonald, 1882, vol. i, p. 63.

2: Mitchell E-5 (1946-1949) 1956 FT7 Yao FT7

slavery in that a trader could at any moment send some of his own slaves to the coast, was actually quite a separate institution.

Although the advent of the White Administration stopped both domestic slavery and the slave-trade to the coast, both of which were vitally important elements in Yao economy, it did nothing to decrease or reduce the variety of the wants of the Africans. On the contrary, it obviously increased those wants. The missionaries, who were the first Whites to settle in Nyasaland, were forced to import large quantities of cloth and beads so that they could buy foodstuffs and pay their labourers. They quite unintentionally, therefore, became competitors with the Yao in this trade. By some accounts their goods were both superior and cheaper. As early as 1878 the African Lakes Company was sponsored by the Church of Scotland Mission, so that it could take over the trading part of their dealings with the Africans. The planters and traders who began to settle in the highlands after 1890 brought more and more cloth, beads and other trade goods into Nyasaland to pay wages and buy foodstuffs.

When the Protectorate was proclaimed in 1891 and the Administration started to put down domestic slavery and the trade in slaves to the coast, the monopoly of trade in goods fell directly into the hands of the Whites. After 1893, when coinage was introduced, the economy of the country rapidly changed from one based on barter with slaves and ivory as the main outgoing commodities, and slaves, calico, beads and brass rings as the incoming commodities, to an economy in which the wants had become even more diversified. In 1895, the *British Central African Gazette* could record:

> The wants of the people of this part of the world not long ago were limited to sufficient calico to clothe the family, but in one short year their wants now include boots, size and quality a minor point, turbans, coats, and in fact at a distance the half-naked native of yesterday has the appearance of Sikh soldiery.[1]

That the Yao took to the use of money is illustrated by the Acting Commissioner's statement in 1897: 'The Yao thoroughly appreciate having a currency. It has proved, in fact, a great step towards civilizing the native of this part of Africa. He is now able to accumulate his earnings, which formerly in the days of a

[1] Vol. i, 2 (Sept. 26th, 1894).

2: Mitchell E-5 (1946-1949) 1956 FT7 Yao FT7

175 When Livingstone passed the Lake in 1866 he found Mponda living in approximately the same place as his successor does to-day, and he mentioned that Kawinga was living on the west of Lake Malombe.[1] He also mentioned that the Machinga dominated the whole of this area, showing that by this time there had been considerable movement into it. When the Church of Scotland Mission was established at Blantyre in 1876, Duff MacDonald recorded that the disposition of the chiefs was as follows: Mlumbe to the north-west of Zomba; Kapeni near Blantyre at Sochi; Mpama at Chiradzulu; Kawinga at Chikala; Malemia on the south-west side of Mount Zomba, and the Matipwiri at Mount Mlanje.[2] These groups, except for Kawinga, still occupy the same positions to-day. At this time most of the movement into Nyasaland had ceased, and the Yao invaders had already set themselves up as rulers over the indigenous Nyanja. At the same time the Ngoni were making frequent forays into the Shire Highlands and the rest of Southern Nyasaland, so that the position was far from stable.

162 The distribution of the Yao to-day reflects the history of their movement into Nyasaland. The districts nearest and fanning out from the point of entry into Nyasaland, viz. the area due east of Fort Johnston, contain the largest proportion of Yao. The more distant the districts are, the smaller the proportion of Yao in them.

The Entry of the Missionaries

797 The Missionaries were the first Whites to settle in Nyasaland. When he was in Britain in 1858, Livingstone had recommended 175 the Shire Highlands as a suitable place for the establishment of a Mission. Inspired by his reports, the Universities Mission to Central Africa was founded, and in 1861 Dr. Mackenzie was sent out to establish the Mission. It was an ill-starred venture.[3] From the sociological point of view its significance is that it

[1] Waller, *Last Journals*, 109.

[2] MacDonald, D., *Africana or The Heart of Heathen Africa*, Simpkin Marshall (London, 1882), i, 31.

[3] Rowley, H., *The Story of the Universities Mission to Central Africa, from its commencement under Bishop Mackenzie, to its Withdrawal from the Zambezi*, Saunders, Otley & Co. (London, 1866), and *Twenty Years in Central Africa*, Wells Gardner, Darton & Co. (London, 1889), 3rd Edition.

2: Mitchell E-5 (1946-1949) 1956 FT7 Yao FT7

initiated the relationships of Black and White in Nyasaland; and its failure was partly a result of the ambivalent attitude to colonial peoples at that time. The people of Britain were horrified at the cruelties of slavery, but the Mission drew upon itself severe public censure because it took up arms against the Yao slavers in its vicinity. The Mission had to face a very difficult problem. It was ostensibly a teacher of the Gospel. Yet about it the Yao were performing deeds of violence, robbery and murder, and were taking slaves from the Nyanja inhabitants in the area. At the same time hundreds of fugitives and runaway slaves were seeking protection at the Mission. To take in fugitives and runaway slaves was, in African eyes, as political an action as to take physical action against the slavers. Should the Mission close its eyes to these un-Christian barbarities, since they were a part of the secular life of the people, or should it take action against them? Livingstone had had no compunction in releasing slaves, and the U.M.C.A. followed his lead, and not only took in fugitives but actually carried out assaults on parties of slave-raiders. This was the time when the first of the Yao groups under Mpama and Kapeni were penetrating into the highlands. The indigenous Nyanja, whose political and military organization was very weak, ranged themselves around the Missionaries, and tried to use them against the Yao invaders. The situation soon developed into a struggle between the Missionaries and the Yao slavers, in which the Nyanja headmen played very little part. Disaster followed upon disaster, and eventually the Missionaries decided that it would be politic to withdraw from the highlands and allow the situation there to stabilize before they returned. In Britain, however, public opinion had been roused by their militant treatment of the slavers, and the Mission, after losing three of its members, including Bishop Mackenzie, through illness, was moved to Zanzibar in 1862.

After 1862 there were a few expeditions to Nyasaland, but none of great political importance. In 1876, a second and this time successful settlement was made in the Shire Highlands. The Church of Scotland founded a Mission in Blantyre, which comprised a lay section of artisans and a clerical section of preachers. It was particularly careful that any political action should be taken by the lay, and not by the clerical, members,

2: Mitchell E-5 (1946-1949) 1956 FT7 Yao FT7

because it was anxious to avoid the censure which its earlier colleagues had suffered. This Mission also felt it could not stand by and see cold murder done in front of its eyes. Yet fugitives came to it as they had to the U.M.C.A., so that the Mission, despite its unwillingness, was inexorably drawn into political relationships with the Yao in the area. The lay members severely punished certain wrongdoers. Eventually an African was murdered at the Mission. They tried the murderer, found him guilty, and allowed a local headman to execute him. The Home Authorities looked upon this action as a trespass from the Mission's proper function. The Mission suffered severe public censure, and several of the lay members were dismissed. It was clear that a Mission in the Territory could not be a mission alone; it could not escape the political implications of the situation, and for the success of its venture some civil authority had to be established.

The Establishment of British Rule

In the meantime Livingstone's publications were bringing the horrors of the slave-trade home to the people of Britain, and more and more pressure was exerted to bring it to an end. As a result, in 1878, Captain Elton, the Consul at Mozambique, obtained permission to conduct an expedition to Lake Nyasa to enquire into the slave-trade. The British population in the Shire Highlands was now increasing so much that in 1883 a British Consul was appointed. From then on, until the close of the century, Britain followed a militant policy against all slave-traders, amongst whom were the Yao. No active steps were taken to institute a formal government over the territory, until in 1889 the Portuguese appeared at the confluence of the Ruo and Shire Rivers with a large military expedition which they maintained was scientific. Accordingly, on November 21st, 1889, the Acting-Consul declared the territory north of the Ruo to be a British Protectorate. The next year, Mr. A. Sharpe made treaties with most of the Native chiefs in the area. These treaties were later ratified by the Anglo-Portuguese convention of June 1891. It is clear that the British Government was protecting the treaty chiefs against the slave-raiders, and ensuring that no other European power assumed responsibility for this service.

2: Mitchell E-5 (1946-1949) 1956 FT7 Yao FT7

622 563 167 hand, all villages tend to disappear in time. We should therefore expect more of the headmen who came in during the earlier decades to be forgotten, and the trend should be more pronounced than it is. In fact we know from other sources that immigration of the Nguru, who represent about one-half of the Newcomers, was greatest before 1930, and it is almost certain that the figures do reflect the change in the amount of Nguru immigration, and that the factors which may operate against the trend are not important. As a whole the set of figures suggests that immigration is slowly coming to an end.

622 563 The Aborigines are all Nyanja. Among the Invaders, 70·2 per cent are Yao, 25·9 per cent are Mpotola, and the remainder 3·9 per cent are Nyanja and Nguru. The Mpotola Invaders are practically all in the Ngokwe and Chikweo areas, so that in the other areas (i.e. in Liwonde, Kawinga, Chamba and Mposa) the Yao represent 94·9 per cent of the Invaders; the remainder are Mpotola. Under Ngokwe and Chikweo who are Mpotola chieftains, 54·5 per cent (48 of 88) of the Invaders are Mpotola, and 37·5 per cent are Yao, and the remaining 8·0 per cent are Nyanja and Nguru. Among the 486 Newcomers, 35·8 per cent of the headmen are Yao, 15·4 per cent Mpotola, 43·8 per cent Nguru and 4·9 per cent are mainly Nyanja. In general, therefore, we may say that the Aborigines are all Nyanja; the Invaders are Yao in the major area and Mpotola in the other area; and the Newcomers are predominantly Nguru from Portuguese East Africa, though there is a fair proportion of Yao who have come from other Nyasaland districts.

622 795 797 There are significant differences among the three categories of headmen in their religious affiliations. In general there are more Moslems (71·8 per cent) among all headmen than Christians or Pagans. But there are more Moslems among the Invaders than among either the Aborigines or the Newcomers.[1] There are more Pagans among the Newcomers, but the proportion of Christians among the Aborigines and the Newcomers is about equal (25·0 per cent and 21·9 per cent). These differences in religious affiliations are consistent with the different historical backgrounds of the two groups. The Invaders are the descendants of the Yao slavers, who in the past had been in intimate

[1] Invaders = 91·1 per cent; Others = 63·9 per cent; Diff. of per cent = 27·2; S.E. of diff. = 3·7; C.R. = 7·2; $p < 0{\cdot}0001$.

2: Mitchell E-5 (1946-1949) 1956 FT7 Yao FT7

TABLE VI

RELIGIOUS AFFILIATION OF ABORIGINES, INVADERS AND NEWCOMER HEADMEN

Religious Affiliation	Numbers			Total	Percentages			Total
	Aborigine	Invader	Newcomer		Aborigine	Invader	Newcomer	
Moslem . .	17	184	296	497	70·8	91·1	63·5	71·8
Pagan . .	1	4	68	73	4·2	2·0	14·6	10·6
Church of Scotland .	3	10	59	72	12·5	5·0	12·7	10·4
Roman Catholic .	2	1	33	36	8·3	0·5	7·1	5·2
Other Christians .	1	3	10	14	4·2	1·5	2·1	2·0
Total . .	24	202	466	692	100·0	100·0	100·0	100·0
Unknown .	1	3	20	24				
	25	205	486	716				

Combining Roman Catholic and other Christian totals.
$n = 6$; $\chi^2 = 56{\cdot}48$; $p < 0{\cdot}0000$.

contact with the Arab slave-traders and had taken over Islam from them. To-day the chiefs are still frequently called 'sultan'. All the chiefs in the Machinga area are Moslems except possibly the Malemia who was installed in 1947. He was brought up as a Christian but the strong Islamic tradition behind his status is reflected in the star and crescent on his ceremonial headdress. The Nyanja, however, were influenced by the Missions from the start and the Nguru were not as directly concerned in the slave-trade and were therefore less affected by Islam. They have been easily converted to Christianity. Among them too there are more Pagans. The difference in religion here is largely a reflex of the political relationships of the headmen. In other words, the Yao stoutly maintain that they are Moslems merely because Islam is one of the distinguishing marks of the Yao and of the Invaders in particular. It would be difficult for some of them to maintain their point in face of strict Moslems, for many of

2: Mitchell E-5 (1946-1949) 1956 FT7 Yao FT7

622 785 787

them follow the tenets of Islam in only the most cursory way. An Nguru therefore admits to being a Pagan more readily than a Yao, because he cannot identify himself with the Invading group.

Kinship with the Chief

692 693

The most important way in which the three categories differ, however, is in the degree to which they are associated with the chief. While the Invaders are identified with the chief because of their association with him in the invasion, they are also tied to him to a greater degree by various kinship links than the other categories of headmen.

Although the exact composition of the Invading groups will never be known, it appears from the accounts of old men, that the groups were made up primarily of the chief and his younger brothers, together with their sons and slaves, and some unrelated followers. Other chieftaincies and village headmen have sprung from the chief's lineage. For example, Kawinga was the leader who brought the present Kawinga-Liwonde group into Nyasaland. The first man to be called Kawinga left the Lujenda River where he was living with an elder relative called Nsanama, whose exact genealogical connection I have never been able to determine. Accompanying them was Liwonde, a younger brother of Kawinga. As they passed through the country just west of Lake Chiuta they encountered the Mpwela under Chikwero, and these joined up with Kawinga and his relatives and went to Kongwe on the west side of Lake Malombe (in the present Kalembo's area). From this place they were displaced by the Ngoni and returned east and south to the Chikala Range where they displaced Malemia and occupied the heights. Subsequently, Liwonde left the mountain and went to live on the Shire River where the old Government station used to be. From this point on, Kawinga and Liwonde seem to have acted almost independently. Nsanama seems to have stayed with Kawinga. Chamba who was the son of the first Kawinga now set himself up as a chief on the south side of Chikala and Chaoni. Mpusa, the son of the first Liwonde, moved to the shores of Lake Shirwa and set himself up there. Chiwalo, a sister's daughter's son of the first Kawinga, set himself up on the northern fringe of the area. Recently Sowa, a sister's daughter's daughter's

?: Hetherwick M-S (ca. 1908) 1952 FT7 Yao FT7

SOME ANIMISTIC BELIEFS AMONG THE YAOS OF BRITISH CENTRAL AFRICA.

By the Rev. Alexander Hetherwick, M.A., F.R.G.S., of the Blantyre Mission, British Central Africa.

The original home of the Yao tribe may be roughly described as the large and lofty plateau which lies to the east of Lake Nyasa, and is bounded by the Rivers Rovuma and Lujenda. Forty years ago, about the time that Livingstone first entered the country, they began to be pressed on the north by the Magwangwara, and on the east by the Makowa tribes. These invasions caused them to move, some westward down to the shores of Lake Nyasa or the banks of the Upper Shire River, and others northward to the Shire Highlands, Mount Zomba and the eastern slopes of Mount Mlanje. In every case they succeeded in either subjugating or expelling the original Mazwi or Manglanje inhabitants of those districts, and in no case have they lost their own independence.

Till about fifty or sixty years ago the Yaos were untouched by any external influences, and when at last the Arab and coast traders from Kilwa and Zanzibar began to visit and trade with them they appear to have been little affected by contact with these visitors. Only a few of the younger men aped at following Mohammedan tenets, and these only grafted on to their still cherished belief in the old fetiche of their fathers. The Koran, or a few of its texts, was added to the many other charms they had already hung about their necks. The faith which the first missionaries found them in possession of when they entered the country twenty-five years ago may therefore be held to be the constituted creed of the tribe from time immemorial.

The foundation of the Yao religion is to be found in the *lindo*, the soul, shade or spirit which every human being possesses, and which is the inspiring agent in his life. They profess to give no definite description of the nature or characteristics of this soul. In their minds however it is allied with the shadow, and would seem to bear to the body the relation which a picture has to the reality. Their word for a shadow is *chiwili*, which is also the term that they use to denote a picture, and pictures they associate with the shades or shadows of the dead. I have known native women to enter a room where pictures were hung on the walls "because of the *mondo*, souls, which were in them." The photographic camera was at first an object of dread, and when it was turned upon a group of natives they scattered in all directions with shrieks of terror. "The European,"

III. THE ENTRY OF THE WHITES

175 The first settlements in Nyasaland were in
● 177 the Shire Highlands where a Church of Scotland
649 Mission was built in 1876. In 1878 the African
Lakes Company was founded to take over the
trading activities of the Mission. As the White
population grew the necessity for some non-
missionary organization to regulate the relation-
ships between Africans and the growing body
of White settlers, who now included planters and
traders as well as missionaries, became more and
more pressing. Eventually in 1883 a British
Consul was appointed. In 1891 to meet the
activities of the Portuguese, a Protectorate was
established and the military measures that had
been proceeding against the slave traders were
now intensified.

175 The military police used by the British author-
648 ities had arms which the Yao could not with-
stand, and even the most successful of Yao
military groups was soon destroyed. Breech-
loading rifles outshot the Yao's muzzle-loading
guns and cannon were also used by the British
in some actions. The British had a force of Sikhs
well-trained in military manoeuvres. Even the
previously impregnable Mount Cikala, so long
held by Kawinga and his forces, was successfully
assaulted. The superior arms of the British
left an indelible impression on the Yao who had
long conducted successful military campaigns, and
in due course these arms came to be identified
with the force of the white tyrants of the Whites.
One of the more immediate results of the success
of White armaments was that certain Yao chiefs
seized the initiative and used the British forces
as a tool in their own political machinations.
The history of the rise of Kalembo, although
his country is outside the area of study of this
paper, is interesting in this respect. Before the
Whites came Kalembo, younger brother of Mwaula,
who was the father of the notorious Mpondo,
was an insignificant character. Just before the

10: Sanderson D-5 (ca. 1920)1922 FT7 Yao FT7

The men and boys now pass through the arch in order of seniority; each splashes himself with the water in the trough, but neither spouts nor rinses the mouth. The women come next, led by the head-wife of the chief; the latter rinses her mouth and, instructed by the doctor, repeats a prayer similar to that offered by her husband. The remainder of the women merely splash themselves, like the men, before passing through the arch. All then return to the village, where the *pyapile* is continued. 751 796

Finally the doctor takes the hammer-head from the trough and hands it to the chief, who refits the haft into it, and, a hoe having been placed on the ground, goes through the form of forging the latter by beating it with the hammer. He then scrapes the ground with the hoe as if clearing a place overgrown with grass; he does not dig with it as in hoeing up the ground for planting seed. After this rite the chief again bathes in medicated water similar to that in the trough, and the ceremony is complete.

Whereas the *pyapile* ceremony and its adjunct, the rite of the arch, are now but rarely performed, no Yao will omit the rite of purification after a death in his family. This ceremony consists of two essential parts, both protective against the *ndala*, a disease characterised by dropsy and supposed to be contracted by contact with a corpse, or by association, especially by sharing a meal, with those who have been in such contact. The first of these parts is bathing in certain medicines, which protects the bather from *ndala*, and the second consists of a sort of communion meal, shared by all friends and especially relatives with those who have been contaminated, and designed to protect those friends and relatives. [178] 751 764 796 783

The decoction for bathing is made by soaking the roots of *lapodondoti* and *lambonda* in water, together with the bark of *mbonwa*, one piece each from the east and west aspects of the tree; the water assumes a reddish tint, and the whole body is bathed. 751 797 828 765

The communion meal consists of porridge made from any kind of flour or of rice, and some *ngunda* beans. In the latter some scorched and powdered root of *mtondangalala* is mixed, with a little salt. All near relatives of the deceased must partake of this meal, as well as their wives and their near relatives; part is carefully put aside for the use of any relative unable to be present at the ceremony. [262]

Latterly, since the spread of Islam among the WaYao, this rite has become confused with the distribution of food to the poor at the funeral of a Muslim, and the Arabic word *sadaqa* ("charity") is now generally used for it, to the exclusion of its wider, correct meaning. [177] [177]

It may be mentioned here that after the death of a child the father is denied access to his wife for a period of about three weeks, and the first act must be one of coitus interruptus. 765 797

MERRIATH SANDERSON.

2: Mitchell E-5 (1946-1949) 1956 FT7 Yao FT7

months November to March inclusive. Diagram 1 shows the distribution of the rainfall during the year. Very little rain falls during other months. The initial rains of the year are ushered in by convectional storms and very heavy downpours. This causes a heavy run-off, flooding of the rivers and lake shores, and much erosion of the parched land which by this time has become

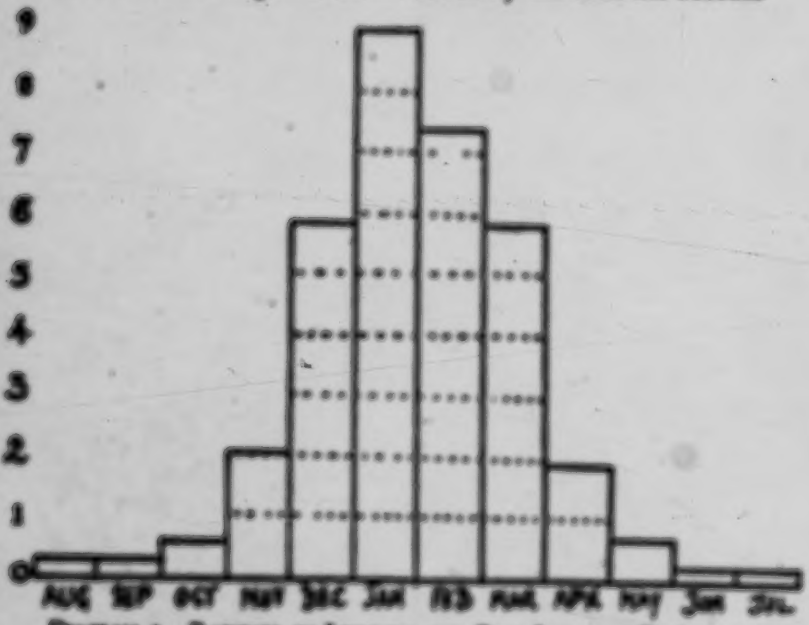

Diagram 1. Rainfall in Lowdoo and Four Jomoroo Districts. This diagram shows that almost the whole of the rainfall occurs between November and April.

very dusty. During December there is usually little rain for a short period of a week or two. After that the rains change their character and become more steady and drenching. They decrease in March and April, and thereafter, little rain falls.

The Yao concept of the seasons follows this feature of the climate. The year is divided into two seasons, called *cuku*, the wet season, and *cuu*, the dry season. The wet season is the one in which most agricultural activity is carried out. The gardens are hoed up and planted, weeded and tended, and the crops harvested, between the months of October and May. During

2: Mitchell E-5 (1946-1949) 1956 FT7 Yao FT7

the dry season, in contrast to the busy wet season, there is much visiting and social activities are resumed. Dances and initiation ceremonies also are mostly held during the dry season. The only agricultural work done during this time is the clearing of the bush and the stacking of the brushwood ready for burning.

The temperatures are high. I have no records for the three stations in the area because recording has started only recently. It is hottest during the months just preceding the rains, i.e. September to December, and coldest during May to August. I have never heard of frosts in the area so it is unlikely that the temperature falls below freezing point. Hornby records the mean maximum temperature for Liwonde as 82·3° F. and the mean minimum temperature as 59·3° F. These are for Liwonde station which is in the Shire Valley. The temperature for the plains and the highlands is probably a few degrees less.

Vegetation

The natural vegetation in this area varies from thick rain forest along the permanent watercourses to open grassland in the marshy patches. In forestry reserves and other places where the vegetation has not been cut out, trees 20 to 30 feet high predominate with thin undergrowth. Along the Shire Valley much of the vegetation is untouched, but in the highlands and on the plain most of the unprotected forest has been cut out for garden lands. In the open spaces between trees the land is covered by elephant grass six to eight feet high.

Population

The density of the population in Nyasaland as a whole is high in comparison with that in the surrounding territories.[1] Within the Territory itself the densities in some districts are as high as anywhere in Africa.[2] The population as a whole is concentrated in the highland districts of Dedza and the Shire Highlands. The districts in which I worked are less densely populated than most of the districts in the Southern Province, but of average density

[1] Expressing densities as total population per square mile. Nyasaland, 155 (1945); Tanganyika, 170 (1948); Portuguese East Africa, 125 (1938); Southern Rhodesia, 115 (1948); Northern Rhodesia, 30 (1948).

[2] Chiradzulu district, 1949; Chola, 1919; Zomba, 1514. *Nyasaland Census*, 1945, Table 8.

121 impressed on people's memories and remembered by most of the people. Thus it
125 was desirable to find a useful reference date between 1910 and 1940. It might be thought that the death of King George V would be memorable. However, though all who were old enough at the time could remember the witchdoctors, only a few could remember the death of King George.

125 This skeleton chronology was filled in by events of more local significance. For example, Kawinga's brick house was built in 1929, the present Nyambi succeeded in 1931, &c. In addition, in particular hamlets there were men who had been in the Army, or had been to work in South Africa or Southern Rhodesia. Usually they could recall the date of going and sometimes of return, though they may have lost count of the intervening years. Both dates were often useful points. A small minority had actually recorded the dates of birth and death of children.

In addition to this, it was possible to fix the ages of the young children by reference to harvests, since the Yao reckon two years in retrospect, 'last year' meaning before the last harvest and 'the year before last' meaning the period before the harvest before last. Before the year before last, all time is merely date-less, the only indication of the period being the pitch of the voice in which it is said or the presence or absence of an exclamatory 'E!' before speaking.

125 Particular care was taken to secure the ages of women and the dates at which they had borne children. There was, as mentioned above, some reticence in mention-
(129) ing the names of dead children, but this was usually met successfully by questioning the women's male relatives who were generally more communicative on these points.
(129) In spite of the care taken to obtain this information, it was impossible to fix the ages of six women in the sample, and they have been excluded from the major part of the analysis. In addition, there were thirty-nine men who were not available for questioning. These were all adults, the husbands of women in the hamlets. The
105 Yao are matrilineal and matrilocal, and men tend to spend much of their time away from the hamlet of their relatives-in-law. Since they are in many ways strangers in the hamlets no information could be obtained about them.

2. The Ethnical Background to Fertility

All the hamlets visited were occupied by members of the Yao tribe. The Yao are an Islamized people who achieved the questionable distinction of being efficient slave raiders at the end of the nineteenth century. They are a matrilineal and predominantly matrilocal people living in hamlets of from about 5 to 100 here or more.

(262)

Table 1. *Age of Women at First Marriage*

Date of birth	Age of women at first marriage												Date of birth
	12–14	15–17	18–20	21–23	24–26	27–29	30–32	33–35	36–38	39–41	42–44	Total	
Under 40	1	6	1	18	6	6	1	1	—	—	—	33	18·1
40–49	6	6	1	10	5	6	1	1	—	1	1	42	18·1
Over 49	—	1	1	1	6	1	1	1	—	1	—	14	18·6
Totals	7	14	13	30	17	13	3	3	—	2	1	100	100

10: Sanderson D-9 (ca. 1920)1922 FT7 Yao FT7

A Note on Ceremonial Purification among the WaYao, Nyasaland.

By Rowlands Sanderson, M.B.C.S., F.R.G.S.

One of the effects of European influence in Africa is the breaking up of tribal organization and discipline. The rights of the individual being no longer subordinated to the common good, customs formerly observed by the village community as a whole die out, while those affecting the individual are still practised.

This tendency is well seen in the ancient ceremonies of purification among the WaYao which are now rarely performed collectively, though the native, however highly "educated," still goes to the doctor to obtain the necessary medicines for cleansing, for instance, the contamination caused by contact with a corpse.

These collective ceremonies have already been described by various writers in respect of both Upper[1] and Lower,[2] but the Yao tribe have not, I think, been given in detail, and the following notes may not, therefore, be altogether valueless.

The *Pepele* ceremony (*Ungapele*, "to sweep") is common to most Bantu tribes. In its simplest form it used to be performed annually by the WaYao, at the beginning of the twelfth month, most of the months (lunar) being kept by means of a "calendar."[3] The whole village is thoroughly "spring-cleaned," all rubbish

* In this, when the game is played on Old Boxing Night in the morning, Father Christmas Myer calls out, the song in Swahili runs:—

Tuwe, pawe, ugonda na mwaga,
Tuwe, pawe, Bwana mzee.

Tuwe, pawe, ulipo pata mwaga,
Tuwe, pawe, I shall not be there day more.

Words repeated, antiphonally, by the bidden hall.

† Sir Harry Johnston, K.C., "The Bantu Tribes," pp. [illegible], [illegible], *Annual Report, Bureau American Ethnology*, 1901.

‡ Duncan, "Before the Mountains" [illegible], 1906, [illegible].

§ A "calendar" consists of a strong twig in two pegs in the wall of the house, or between two poles, on which are threaded twelve pieces of wood, bamboo or cornstalk. One of these is moved to the other end of the strong twig when a new month is seen.

2: Mitchell E-5 (1946-1949) 1956 FT7 Yao FT7

Native Authority, to the Native Authority, and eventually to the District Commissioner if the case is one which he will countenance. In practice, most cases reach the chief and go no further. Most people accept his decision. Thus the chief has important judicial functions. 692 643

The Chief as his People's Representative

In special situations where the welfare of the chiefdom as a whole has been endangered by an infringement of the mores, the chief may take action. For example, a chief prosecutes a village headman who allows a woman in his village to bear her first child before she has been through the *lisiwo* ceremony. Every woman who becomes pregnant for the first time must undergo this ceremony, during which she is instructed in child welfare and child care. If she bears a child without undergoing the ceremony, she is said to have 'spoilt the country' (*ipalowe ilambo*), in the sense that she has besmirched its reputation.[1] 643 687 843

Chiefs usually call in magicians[2] to smell out 'those responsible for keeping back the rain.'[3] When the rains fail as they did in 1948-9, their failure is held to be due to the magic of some evilly disposed person. It then becomes the chief's duty to call in a magician to indicate who this person is. The fees for this duty are paid by the chief himself on behalf of his people. 643 787 821

The chief also acts as a representative of his people when they are affected as a whole. For example, Nyambi called in a magician after man-eating lions had taken some of his subjects. This magician called for the hearth-stones and domestic utensils from all the villages in the area, and built them up into a pyramid over which he made some anti-lion medicine. This was to clear the whole chiefdom of man-eating lions. 643 789 793

Nowadays, the chief's representation of his people is seen more clearly in his position in the Administrative framework.[4] The chief represents the Administration to his people since they approach it through him. At the same time the Administration clearly treats him as the representative of his people and consults 643

[1] I was told in Mpondo's area that the women undergo this ceremony after the birth of the child, but that it is still obligatory.

[2] *Kamwe ulo*—lit. 'to tie or bind the rain', in the sense of to make it a prisoner.

[3] I have dealt with this aspect more fully in 'The Political Organization of the Yao of Southern Nyasaland'.

2: Mitchell E-5 (1946-1949) 1956 FT7 Yao FT7

TABLE IV

ORIGIN OF VILLAGES WHICH HAVE ARRIVED IN THE KEWINGA-LIWONDE AREA SINCE THE WHITE CONQUEST AND ARE STILL THERE

Origin	1946–1949	1950–1953	1954–1957	1958–1961	1962–1965	1966–1969	Total
Northern Areas:							
Fort Johnston . . .	—	—	—	6	—	1	7
Nyambi	—	3	—	1	1	2	7
Jalali	1	—	10	6	1	3	21
Southern Areas:							
Malemia and Nsanungi	—	—	—	1	7	18	43
Zomba	—	—	—	4	7	4	15
South of Zomba . .	—	—	—	2	1	3	6
Other Nyasaland Areas:							
Port. E. Africa . . .	—	—	—	3	—	2	5
Unknown	13	36	111	37	6	30	233
	—	—	—	2	1	31	34
Total	14	39	121	60	24	104	411

Africa. We have no record of how many villages have been lost to the Southern or Northern area from Kewinga-Liwonde area, so that we cannot evaluate the significance of the gain of 64 villages from Southern areas, and of only 15 from the Northern areas. The density of population in Malemia's area is 268 per square mile, and the average density of the Shire Highlands is about 156·6. It may well be that there is now a movement out of the Shire Highlands into the less densely populated Liwonde-Kewinga area.

THE PRINCIPLE OF PRIMACY

Migration and invasion have been the keynote of Machinga histories: village headmen recount with pride how their ancestors moved into Nyasaland with their bands of slaves and followers. 'The East' is the traditional home of the Yao and even young men who have never been there proudly say, 'We come from the East'. This sentiment is reflected in the belief that the rains from the east are beneficial and give rise to good crops, while the rains from the west are detrimental and cause

2: Mitchell E-5 (1946-1949) 1956 FT7 Yao FT7

crop failures. Also I was told that important village headmen are buried with their heads pointing to the east.

The Yao concept of the past is reflected in the principles of political organization of these Machinga chiefdoms. The invasion is the datum point from which rank mainly stems. We may classify modern headmen into: those who were in the area before the Yao invasion, i.e. the Aborigines; the invaders; and those who have come in since the invasion and have had to submit themselves to the Machinga chief, i.e. the Newcomers. The principle behind this classification of headmen is fundamental to Yao political structure. Stated most simply it is the rule that MacDonald quoted in describing the development of local organization: 'However large the settlement may become the man that is first in is the chief or headman.'[1] This is, of course, somewhat of a simplification, but the rule contains the essence of the principle. It was reversed for the Aboriginal Nyanja because the Yao subjugated them. But the claims of the Nyanja chiefs to rank because they had occupied the land first were recognized by the Yao who absorbed them into the social structure in positions of high rank.

But the principle holds among the Yao themselves, and for the Ngoni in their movements after the White conquest. The operation of the principle is clearest in the structure of small local areas such as Chiwalo's. When Chiwalo's area was first settled, just after World War I, there were large tracts of unoccupied land. The first headmen to move into this region were Cigwaja, Kapulusu, Nyanja, Makata and Mumbwa. The local chief Chiwalo followed Cigwaja, but as Cigwaja was one of the leader headmen under Chiwalo during the period of invasion, he now recognized Chiwalo as the chief. The area that is now Chiwalo's chiefdom was divided out among these five headmen. As other headmen came into the area they had to approach one of these five for land rights. These, when granted, were granted irrevocably to a block to the new village headman who then had sole rights to distribute the land afterwards. If he had the land to spare, he may have granted a portion of it to yet another village headman, and this action was also irrevocable. The land occupation pattern in any particular area is therefore extremely complex, because in addition to the village garden areas, indivi-

[1] MacDonald, *Africana*, i, 141. See p. 11 above.

Schwanse D-5 (no. 1910) 1922 FT7 Tsa FT7

Lomdzi Mlungu is the prophet of Isandzu, a man of great height who walks the round of the country, stopping from kill-up to kill-up along "the fairy way," the "*Mlela wa Lomdzi Mlungu*," which is supposed to run right around Nyamdzeni and never to cross a river, starting and ending somewhere near the junction of the Skiri with the Sandzeni river. As he goes, he can be seen from a hundred miles away. He carries the *Isilimbo* instrument and plays on he violin, singing:

"*Kulwa* [illegible] *mapu* *Gungupu* *Lutiga mapu* [illegible] *mabiwa* [illegible], *mabi*"—
"You my cat (in trouble) with the antique theodolite I must roll up the maps, this season of Sandzeni"

which might be rendered, "You people grumble about small troubles, so I will teach you to know better by inflicting great ones." Where he is seen, there will be famine.

It will be convenient here to allude briefly to some of the beliefs concerned with meteorological phenomena, as some of them have a bearing on native religious beliefs. The remarks made under this heading for the *Amayeni* hold good for the Yao. The morning and evening stars are called *Nyamdzeke* and *Nyamyalungu*, the good crab and the bad crab. They are looked upon as the two wives of the moon, one of whom feels him as well that he grows fat, the other who does not, so he wastes away. The constellation of the Pleiades is called *Dzuka*; the Milky Way, *Lutinga mulu*, "the warriors of the night," when high in the heavens, dawn is near. When shooting stars are seen, natives exclaim "*mapulo mlungu!*" *Mapulo* is a many-pointed arrow. Eclipses are recognized but no explanation is vouchsafed. Thunder is supposed to be the noise of rain falling in the heavens before it reaches the earth. The rain is sometimes supposed to be the condensing steam from an enormous pot of water boiling over a furnace fire in heaven. The lightning is conceived as a lizard-like animal which dwells in the clouds and darts out from behind them and comes to earth and breaks up trees and may kill a man. Mire is supposed by the Yao to be its movement. The animal is called *Njoni*, and is the same as *Mjoniko* of the Ankipsia who consider the mire to be the broken eggshell of the lightning dragons' eggs. There is a large red wingspread fly, a species of *Hymenoptera* also called *Njoni*, which is in some way connected with the lightning. No Yao child would ever touch this fower. Children are always advised never to seek shelter under a big tree but always to make for a bamboo thicket, for if the lightning strikes the bamboo and splits it, it will get caught inside the hollow stem.

Gales of wind are said to emanate from a plant called *Chungulu*. It is described as having two prongs like an elephant's trunk and others like two fingers. It is found on the tops of very high mountains, growing alone and surrounded by bare rock. This plant is used by medicine men to gain supernatural powers. *Chungulu* is also the name of a parasitic plant on the diseased trees in Nyamdzeni.

The world is taken by the natives as they find it; to them no explanation for its being is necessary. So far as I can find out, there is no idea among the Yao of a Creator. The

2: Mitchell E-5 (1946-1949) 1956 FT7 Yao FT7

Further enquiries may reveal that this is only a section of a larger village, possibly a hundred or more yards away.

The boundaries of a village may not always be clear. Clusters of huts which are part of one village may be physically nearer another, but in the minds of the Yao, who see not only the huts but also the social relationships of the people occupying them, there is no confusion at all. As a general rule the villages are fairly compact and clearly demarcated from others, and even strangers have no difficulty in recognizing the autonomy of the group which is expressed in many different ways. MacDonald recorded that formerly a headman performed a certain amount of ritual which symbolized the unity of the village.[1] Much of this has fallen away, but the unity remains.

The ritual surrounding the foundation of a new village bears testimony to its persisting political significance. In this ritual the unity of the group, against other similar groups, including the village from which it has sprung, is expressed. On first arrival at a new village site the men build grass sheds, beginning with that of the headman. That night the headman pours a cone of sacred flour at the root of a tree on the site, and asks the spirits of his ancestors whether the site is propitious. Early next morning he examines the cone to see the answer. If a side of the cone has collapsed it does not augur well and another site is selected. If the cone is still whole it is taken that the spirits acquiesce, and permanent huts can be started. The headman then goes into the bush to find medicines[2] which he mixes with groundbeans. That night, with the medicated groundbeans in the hut, the headman has intercourse with his wife. In the morning those who are not sexually active come to the headman's grass shed to drink some water in which the medicine has been steeped and eat some of the medicated beans with a little porridge, which the headman's wife has prepared from the sacred flour. This medicine is called 'the medicine to strengthen the village' (*mitwa wakulimbika mwai*). Until then all members of the village should have been continent but after this sexual relationships may be resumed. The object of the medicine is to prevent those

[1] See pp. 31-2.

[2] *Nkhalangwa* and *ulwa*, two plants commonly used for protection against witches. See i.e., p. 111.

3:Stanner D-5 (ca. 1912) 1922 FT7 Yao FT7

764

toward the east. After adjusting the body in its place, the adzie would tear open the shroud over the sun, and pour on to the place some powdered beads to be used by the dead man as money in the hereafter. Except in the case of chiefs, no objects were buried with the dead, contrary to Macdonald's description[1] of the Amangoche. The pole on which the body had been carried to the grave was broken into bits and together with any stick that had been used to measure the body for the cave, was placed in the grave. The opening into the chamber was then closed by a mat fastened over it by pegs and supported by pieces of wood. The men chambering out of the well, pushed the first earth backward into the grave with their elbows, after which the rest of the earth was shovelled in quickly, and a heap made at the surface. The ground about this mound was swept clean with a bunch of leaves by some one walking backward so that no footprints were left; the bunch of leaves was thrown on top of the mound. No medicine was put in the grave, nor were the household utensils placed on the mound, as Macdonald states concerning the Amangoche.[2]

[114]

For some years past, the type of grave made among the Yao has resembled that of the Angoniyo,[3] a long pit with a chamber scooped out along the whole length of one side. In this, the corpse is placed in a fully extended position so that it lies on its back with the feet toward the east. With this exception, the account given above holds good for the present day. The method of suspending the corpse in a mat slung on forked sticks within the grave, mentioned in *Africana*,[4] is not found among the Amachinga Yao.

764
765

On the way back to the village, two men lead, followed by the men, the women, and lastly, by the other men. First, all wash, the men upstream, the women downstream; no one may wash another's back. The hoes used in digging the grave are also washed; hoes are never washed on any other occasion.

During the funeral, some responsible old man is left in charge of the village with several younger men to assist him. Just before the return of the funeral party is expected, the old man sends one of the younger men to set medicine at the side of the path along which the mourners will pass. This medicine is made from the bark of the *mpingo* tree and is used for purification; it is placed in a shard. Each person as he arrives at the spot squats down, dips the little finger of each hand into the medicine, and passes the fingers between the little toe and the third toe of the corresponding foot. The last mourner throws any remaining medicine into the bush. As they near the village, a gun is fired and wailing is renewed for a few minutes, after which it ceases altogether. The old man who has been left in charge of the village always inquires whether all has gone well at the interment.

[114]

765

That evening, the time is passed in singing *chinkhoko*.[5] All those who attended the burial, sleep in the village, and if the deceased's relatives can afford to provide the necessary food, all remain in the village for a number of days equal to the period which elapsed between death and burial. Sometimes, when burial was long delayed, the mourning party

[1] Op. cit., vol. 1, p. 90.
[2] Ibid.
[3] Stanner, "Some as sections of British Central Africa," op. cit., p. 210.
[4] Macdonald, op. cit., p. 90.
[5] Vide infra, p. 347, 370.

759 A sonsi may be met with under different circumstances. An educated native told me of his experience one night when riding a bicycle back to a township where he was employed. Coming along a smooth-faced path with his lamp alight, he became aware of the presence of something in the bush in front and at the side of him. Suddenly his lamp was extinguished and he was left in darkness, while something pushed him over so hard that he fell off his cycle. Picking himself up, he started to wheel his cycle on, when there appeared on the path in front, figures who, rubbing their hands together to produce a phosphorescent glow, held them up in front of the boy's face. He was, however, not molested further, and coming to a group of huts he knew, he went in and made inquiries as to the cause of his experience and was promptly told that there was a sonsi living in a hut near the spot on the path where they had encountered who was supposed to be sonsi. Such a story is given for what it is worth. The boy was about twenty-two years old, a highly educated native with an intelligent appreciation of the worth of superstition.

Some sonsi demonstrations can have no object but to strike terror and keep up the prestige of the sonsi class. Mr. Maggridge wrote me, "A boy of mine was certainly attacked and squeezed about the neck by a sonsi whom he described as naked, huge, and slightly luminous, on the road at the back of my house in Shaniyen. The boy was strolling up and down in the dark and had nothing about him to provoke robbery; he was almost choked before he managed to let out a yell which determined his assailant to let him go. He was not a local boy and no theory of personal spite was supportable. I thought and still think that the motive was to show that even the President's servant (twenty yards from the President's house was not safe from sonsi." It seems possible that some natives with intent to rob had pretended to be sonsi but recognizing that their victim was likely to cause trouble, they went no further.

[924] It is said that the phosphorescence is produced by rubbing in the hands two vegetable substances from local trees and that this is the method the sonsi adopt to announce their presence.

759 Poison Ordeal. As I have said above, when anyone sickens or dies, the illness or death is likely to be considered the work of some sonsi who is sonsi, and action will be taken by the relatives to find him out. The proceedings in such a case where witchcraft is suspected will now be briefly sketched; though I give an account of a case from beginning to end as it is occurred at the present time, it must be understood that the giving of sonsi, the ordeal poison, is now much less common than formerly. A man becomes ill in some village and does not get better, so the matter of him is considered. The sick man's relatives or friends go to the lois-sonsi and approach the subject indirectly by asking him his advice about a number of imaginary cases; they may say, "Things have been stolen from our house." The lois-sonsi and the sonsi replies, "Yes, you have not come to see me about that." This may go on for hours before the facts of the case proper are mentioned to him. Finally, they tell him that one of their relatives is ill in the village, the lois-sonsi consulted and advice is given.

[N]

S-Dunne D-4 (ca. 1912) 1922 ??? Tao ???

632 *Myoni* is a love potion. Men are often anxious that women should ask them for love (*ku-pula*). A man seeing a woman whom he fancies, takes up some of the dust where she has trodden and mixing this with medicine puts it in his hair. If he must her again, though he takes no notice of her, she will come to him.

787 When crops are harvested, a layer of the sand is laid at the bottom of the store-house, and some, which consists of medicines contained in the skull of or made from the body of a still-born infant, is then put in and the store filled. In this way, he who has only a small
249 garden may be sure that his grain will last a long time. Similar medicine is put in gardens with the first ripe or lowest heavy crops. A man on the approach of the planting season should never give away seed to anyone until his own seed is put in or it may bring bad luck to his crop. This is evidently a superstition arising from the fact that if he gives seed away, he may not have enough left to raise a crop sufficient to support his family. Some people are mentioned "lucky at planting pumpkins, other people when they plant, reap only watery pumpkins." A man, therefore, will often ask one of the lucky people to plant his pumpkins for him. My hospital boy always got the cook to plant his pumpkins.

787 A man wishing to become a person of importance, with a village of his own, takes a
● medicine made from a certain tree and then builds his hut in a new place, hoping people will flock to him. The tree is known as *shakamiti*. Another medicine, taken in the belief that people will flock to a man in consequence, is made from the bark called *mnin*. Cf. Mnin placed at the threshold to attract visitors.

787 Conjuring. There are other performances akin to magic in the eyes of the natives,
79 which I have never had the opportunity of witnessing but which would appear to be of the nature of juggling or possibly hypnotism; some resemble the tricks of jugglers, others are more like some of the performances in India. I certainly suspected that they had been learned from men at the coast (Swahili), but I am assured that they belong to the Tao dynasties.

Kaonkenje, a Tao of Chimdumbe, well-known at dances and Ungapa, after some preliminary dancing, stands still and is covered by a cloth; when the cloth is again removed, he is discovered with a number of squealing puppies held in his bare cloth, which he then hands round. He begins to dance again and the persons to whom the puppies have been given watch him and then find they are holding environment, not puppies. Or small fish are handed round and the people find they are holding women's diapers.

Another trick often performed by Kaonkenje was the burial of a man in the ground, covered up completely with earth; at the sounding of the drums the buried man came running in from the back of the wondering crowd.

Kanenge, a Tao of Mahenye's, priest, and medicine man, after an Ungapa ceremony used to put on his red blanket and walk over the hot embers of an enormous fire in the village open space. He admitted that he smeared himself with medicine and an eyewitness told me that when he put his foot on the hot logs, it caused a sizzling sound.

Thegelage was another well-known performer; he used to do the same tricks as Kambonje. He also was possessed of an electric chair and is said to have been able "to tie his ears together behind the back of his head." [787] [788]

Mpankatola's Tao of Mpankatola, is a cage with considerable concern. He is said to be able to produce a lion, or, rather, from a lion's tail and claw. He would offer to show this if there were any brave enough to go through with it. On a moonlight night, he would expose on the ground in a cleared space near a village the tail of a lion held cross-wise in a piece of split bamboo. At the split end of the bamboo, he would place a lion's claw and round this, a woman's belt held in position by three bamboo pegs, around which he would draw a circle of adequal flour. Everyone would then withdraw to a hut in which the course was to take place. After an hour or so, Mpankatola would send some one out to inspect the lion's tail where probably all would be found intact. He might then pretend to be uninterested and sleepy and suggest that some one should go out again in half an hour. Sooner or later, a man would come back, having found the tail gone; then everyone would go out to see what had happened. The pegs would be found in place but the tail and claw gone. A little way off, the split piece of bamboo would be found and further still a head or two from the woman's belt. Then, Mpankatola would pick up, and leaving a little trail of flour on their way, all returned to the hut, while he whistled as if nothing were wrong. Suddenly they would be aroused by the sound as of a lion breaking against the hut walls, as the beasts are known to do, and next, a loud roar. Mpankatola would immediately open the door half-way so that the people could look out into the moonlight and there, a little way off, would be the lion. It would immediately advance towards the house and then, as it prepared to spring for the door, Mpankatola would offer it some of the flour in his left hand, armed with a stirring-stick, strike, in his right hand. As the lion landed, he would strike it on the head with the stick and lo and behold! the lion would vanish and the tail and claw would be found in his hand. [787]

Superstitions. Scattered throughout these notes, particularly under Usual and Disease, mention is made of practices which show a strong belief in superstition. Below are given a number of minor beliefs, and it is interesting to compare these with many well-known superstitions in other parts of the world. [789]

1. A child who cuts the upper incisor teeth first will be unlucky. Such children used to be killed by the Tao. (Other tribes make medicine against the threatened ill-luck.) [775]

2. A woman with polydactylism may not take food out of a cow-store. Otherwise the stock of cows will not last long. (Rudimentary sixth fingers are not uncommon.) [776]

3. An insect called shiguse used which lives in the mud at the bottom of pools, if killed causes the water to dry up. [777]

4. If a boy puts a cotton-spinner in the armpit when learning to swim, he will learn quickly.

5. A man wishing to prevent rain falling on a day he is making a journey, will wrap some of the leaves of the cotonnut tree in his bale cloth and go without detaching. [778]

3:Hanson D-5 (ca. 1912) 1921 FT7 Yao FT7

516 738 769

knees and elbows, at intervals swaying their bodies from side to side and clapping their hands. Sunset then ordered all to go and bathe, men and women separately. As they returned from the stream, rain began to fall.

Intercession on behalf of the sick may be made, especially by anyone who is likely to be accused of causing the illness by witchcraft.[1] The man standing with arms outstretched, downwards and a little in front of his body, the hands supine, takes some water in his mouth and discharges it in a stream on the ground, (probably as a sign of purification of his tongue), and then invoking "all the spirits above," asks that they will intercede to restore health to the sick man and bear witness to his own innocence of any wish to do the sick man injury. *Ku-pepa* is the word meaning to offer sacrifice and prayer.

755 769

Harvesting and hunting are occasions when sacrifices may be offered. It was formerly the custom for the chief to determine the day on which harvesting of millet should begin. On the day appointed, a big drum was beaten in the village and word passed round; then everyone would go down to his garden, gather a head of millet, and bring it back to the village where it was all handed over to the chief's headwife. After drying and threshing, a little of the grain was laid at the grave of an old chief by one of the reigning chief's advisers, the remainder being again distributed to all the people gathered together in the village meeting-place, who ate it raw. After this ceremony, harvesting began.

769 241 782

In passing through a millet garden, if a child asks his mother to give him some to eat, she plucks a branch or two and reverently laying one at the foot of a *mwavu* tree for the spirits or at the base of some other tree, if she cannot see a *mwavu*, she gives the rest to the child.

When a hunting expedition makes its first killing, part of the flesh of the animal is laid at the base of a tree as a thank offering to the spirits and in anticipation of further favors to be vouchsafed. All such offerings are supposed by the natives to be partaken of by the spirits, though they are well aware that they do not actually diminish in quantity. There is an interesting point in this connection: any man who has acted as *ndola* (undertaker) to some well-known man may appropriate these offerings. In the case of the hunting offering, he will run round the tree, saying, "I am a hyaena, the spirits will not mind me," and will then take part of the flesh-offering and eat it.

782 224

In the same way, a *ndola* may drink from a grave beer-pot after three days, when the spirits are supposed to have taken what they want.

With the exception of the *mwavu* tree above mentioned (*ndema*, Chin.), and possibly another called *ndola-ngama* (Chin.), which is never used as firewood and which is supposed to be used by women, I do not think there are any sacred trees properly so-called. Miss Werner supposes that many of the big trees (often a species of *Ficus*) in villages are sacred.[2] The truth is, I believe, simply that a village is made naturally round a big tree which conveniently offers its shade for the village meeting place. The spirits of deceased chiefs may

824 778

[1] This supra, p. 207. [2] The authors of British Central Africa, op. cit., p. 40.

[514] [778] be supposed to live in such trees. They are convenient natural objects for them to occupy, in fact practically the only ones to be found in villages. Trees may secondarily, therefore, be looked upon as in some degree sacred. Almost each town shrine or place of sacrifice may be placed as an offering to the spirits of the departed. But the Tao do not erect little huts in their vicinity, hung about with strips of cotton as is the custom among the Anyanja.

[775] Macdonald* mentions the spirits in connection with Kudu and other hills round Blantyre and supposes them to be the spirits of the places themselves. This I think is unlikely; they would probably turn out to be spirits bearing the names of long departed Anyanja chiefs whom the immigrant Amangoniin Tao conquered just "to be on the safe side," since they had come and taken the country which long ago belonged to the former tribe. When approaching or passing any spot held to be the dwelling place of spirits, salutation is made by clapping the hands.

Spirits of the departed may enter into animals or may take the form of animals, commonly lions and sometimes large snakes (python), but this belief is not so general among the Tao as among other tribes, in my opinion. An animal which is so possessed is called kapolo, from ku-apola, "to be transformed."

[774] Apart from this habitation of inanimate objects above mentioned by natives, there is nothing that points to a belief in Animism among the Tao, so far as I know. Neither hills, rocks, streams, lakes, nor trees have their own spirits, nor are they endowed by the native mind with life.

Deceased persons appear to the living in dreams, the native apparently believing that the deceased appears in his material body.

[776] [787] [791] They believe also in revelation of wishes of the deceased through the medium of the living. The spirit of the deceased is supposed to enter into the medium. The medium, I am informed, is always a woman, never a man. From the descriptions of some of these revelations obtained, there can be no doubt that they are manifestations of a pronounced hysteria. The medium works herself up into a frenzy of excitement and in her delirium gives out the name of the deceased, the voice which speaks being that of the spirit within her. She rolls on the ground and froths at the mouth, uttering the word of revelation which is generally to the effect that some deceased chief's spirit is being neglected at the neglect of his tomb; the voice may go on to say that certain practices are forbidden, or deceased that certain rites be observed by the people. The spirits which possess her are generally spoken of as mzimu, a word which, though sometimes used as equivalent to nature, usually seems to have rather a sinister significance. Insane persons are called mzimu and are thought to be possessed by a spirit, and vapor baths with exorcism may be practised for their cure. In the case of the death of anyone who is possessed, in answer to my interrogation, I have been told that both the spirit which has entered into the man and his own mzimu leave his body.

[514] [784]

* Op. cit., vol. i, p. 92.

Lwembe Mtungi is the prophet of Isoma, a man of great height who walks the round of the country, stepping from hill-top to hill-top along "the fairy way," the "*Mlele wa Lwembe Mtungi*," which is supposed to run right around Nyamlond and never to cross a river, starting and ending somewhere near the junction of the Shiri with the Sambezi river. As he goes, he can be seen from a hundred miles away. He carries the bilimbo instrument and plays as he walks, singing:

"*Kulwa* [illegible] *mwe* [illegible] *bulya mwe* [illegible] *mwembe mwembe ndo*"
"Too my out (in trouble) with the midge (bulya) I must call my the wraps, this master of Isoma!"

which might be rendered, "Too people grumble about small troubles, so I will teach you to know better by inflicting great ones." When he is seen, there will be famine.

It will be convenient here to allude briefly to some of the beliefs connected with meteorological phenomena, as some of them have a bearing on native religious beliefs. The meteorite made under this heading for the *Anyanja* hold good for the Tao. The morning and evening stars are called *Kwamlaba* and *Kwampulungu*, the good work and the bad work. They are looked upon as the two wives of the moon, one of whom feeds him so well that he grows fat, the other who does not, so he wastes away. The constellation of the Pleiades is called *Ilimbi*; the Milky Way, *Lidzinga mwlu*, "the watcher of the night," when high in the heavens, dawn is near. When shooting stars are seen, natives exclaim "*mwapulo wlinjal*" *Mwapulo* is a many-pointed arrow. Eclipses are recognized but no explanation is vouchsafed. Thunder is supposed to be the noise of rain falling in the heavens before it reaches the earth. The rain is sometimes supposed to be the condensing steam from an enormous pot of water boiling over a furnace fire in heaven. The lightning is conceived as a lizard-like animal which dwells in the clouds and darts out from behind them and comes to earth and breaks up trees and may kill a man. Mice is supposed by the Tao to be its excrement. The animal is called *Kjiwi*, and is the same as *Mjumbe* of the Ankjaria who consider the rains to be the broken egg-shell of the lightning dragons' eggs. There is a large red compound fly, a species of *Hymenoptera* also called *Kjiwi*, which is in some way connected with the lightning. The Tao child would ever touch this flower. Children are always advised never to seek shelter under a big tree but always to make for a bamboo thicket, for if the lightning strikes the bamboo and splits it, it will get caught inside the hollow stem.

Gales of wind are said to emanate from a plant called *Chungulu*. It is described as having one process like an elephant's trunk and others like two fingers. It is found on the tops of very high mountains, growing alone and surrounded by bare rock. This plant is used by medicine men to gain supernatural powers. *Chungulu* is also the name of a parasitic plant on the diamond trees in Nyamland.

The world is taken by the natives as they find it; to them no explanation for its being is necessary. So far as I can find out, there is no idea among the Tao of a Creator. The

The hair of the axilla is always removed in men and women, usually by shaving but sometimes in the case of women it is dealt with as in the case of the pubic hair. A man with underarm axillae would be laughed at and referred to as "a man carrying a level in his armpit." The axillary hairs are called *mandanga pe mimpanpe* (*mpanpa*, the armpit). 302

The pubic hair, *mandanga*, is removed by both men and women; in men by shaving, in women sometimes by shaving, but preferably by plucking out after the application of a medicine called *mamandanga* (*ba-mam*, to pluck a leaf), which renders the operation easy. It is prepared from the juice which exudes from the bruised bark of the *mam-mandanga* tree. There is a woman at Malanpa's who has never grown any axillary or pubic hair; she is called "the *ragan* elephant"; a *ragan* elephant has no tusks. It may be noted in passing that the woman has borne children. [124]

A few men leave the hair round the anus shaved. Such a service can only be asked of a man's closest intimate, such as a brother-in-law. [607]

I have dealt with tattooing among the Tao in an article, as yet unpublished, on tattooing among the natives of Syamaland.

The teeth among the Tao people are never mutilated in any way, though the Amangoda go in for small file marks at the cutting edge of the incisors. 304

The old Tao women, of whom some may still be seen, used to pierce the upper lip and wear a circular disc of wood often two inches in diameter in the hole; this is called *hapidik* (Pl. VII, fig. 4). The disc was often made of lead and sometimes of ivory. The lead might be hammered out on the upper surface; it was then called *hapidik ba ulali*. The disc caused a considerable projection of the upper lip which was much admired. A man, on the other hand, with protruding lips would be nicknamed "the warthog," *mamapinda*, and considered ill-bred. 304 301 [632]

This *hapidik* fashion has gone out of late years the *shipini* or disc worn in the left ear of the men has become more and more fashionable (Pl. II, fig. 2). Originally the *shipini* consisted of a small disc of lead not larger than a three-penny piece, which lay on the outer surface of the ear, held in place by a stem, *hobinji*, which pierced the ear and passed into the meatus. Now the fashion is to wear a very large disc, often an inch in diameter, which itself occupies a hole in the substance of the ear of the man; it may be flat-topped and called *shipini ska vinaga* ("mushroom"), or the upper surface may often be concave, in which case it is called *shipini ska utuli* (*Utuli*, a grain mortar). These disks are made of lead and are sometimes called *lidini*, a recent word and doubtless a corruption of "lead." Others are made of ivory, which may have some geometric pattern on the exposed surface. A *shipini* used to cost a lead.

Among Tao men and women, the lobule of the ear is often pierced but nothing is worn in the hole except possibly a stalk of grass.

Combs for use and for ornament are worn in the hair by both men and women. The ordinary comb without decoration is called *lilumalaga*; it is made of a number of pieces 301

301 of bamboo fastened together at one end on the flat side by binding with string, the free ends being sharpened to form the teeth of the comb. If the fastened end is ornamented with beads sewed on in patterns, the comb is called *lisumulo* (*lu-sumulo*, to comb). *Lisumulo* lin [824] *shinyombolo* from *lu-syombola*, to be sticky, is the name of a small comb worn purely for ornament. On either side of the base of this comb, pieces of wood variously shaped are glued with the sticky juice from the root of the *shinyombolo* tree. In this way, a sort of inlay is produced. Pieces of tin cans are sometimes substituted for wood. Women commonly wear in their hair the small *shiawolo* knife used for tattooing and shaving.

302 The native takes readily to perfumes of European introduction, but previously he was [177] not an entire stranger to the use of such unguents. *M'bolo*, the bulbous root of a kind of grass which grows near water, contains some aromatic principle which has a pleasant odor. The stem is bent around and fixed into the bulb; this is then covered with beads and slung around the neck. *M'ungwa*, the *Mlanje* cedar, is also used, as well as the fruit of a shrub called *chiungwa*. These substances are scraped into the castor oil used for anointing, and give it a pleasant odor.

No pigments are used on the body. As a sign of great rejoicing, the head and face and perhaps the whole body are covered with ashes, but the natives do not even paint the face with flour on ceremonial occasions.

301 Bands of beadwork are worn around the head, either as a simple band or a band finished off with a bunch in one spot, or with a tassel. Finger rings are worn made of ivory, elephant hoof and horn, lead, and iron wire. There is also a great variety of bracelets and anklets, a list of which is given below.

Chipanda: made of plaited grass, worn chiefly by little girls and women who cannot afford more expensive bracelets. As many as half a dozen may be worn on the wrist.

Likangala (pl. *makangala*): single circles of solid brass, one half to three quarters of an inch in diameter, worn by women usually as anklets, one or two on each limb. They may still be seen on some of the old women, but as they cause much discomfort, they have gone out of fashion. A man used to be very proud to see his wife adorned with so much wealth and she was content to be so hobbled by her vanity. The hammering up and pulling open of the *likangala* circle in order to remove it cost a fowl.

Chikungu: a brass bracelet of small calibre; *ikungu* (pl.) signifies a spiral cylinder made from the same thick brass wire covering the entire forearm.

Likwinjili: like *chikungu* of thin brass or iron wire, worn on arms and ankles.

Ching'ande: a bracelet of fine brass wire wound round a circular core. All the brass comes from the coast.

Likoso: a large ivory bracelet worn by men and women.

[237] *Ukungu:* ("stiff tail hairs of an animal"), the bracelet made of the tail hairs of the elephant or the gnu.

Lichuka: the bracelet made from elephant hoof.

776 THE [illegible] TRANSLATED "[illegible]", [illegible]

[364] is swept up, the ground round the house is hoed clean, and the interior scrubbed. Ceremonial beer is brewed by the head-wife of the chief, and after this has been drunk the ashes of the fire used in the brewing are carefully collected and taken to a medicine ("ocan-ruada," or "divinging of paths") where they are deposited. [783] The chief, as representative of his people, bathes in special medicated water, a decoction made from the bark of ng'ungu and ashoan, and the rest of mpingo. [327] This completes the ordinary annual ceremony, at which new fire is not made. [622]

On certain special occasions a more elaborate ritual is carried out; such occasions are the death of a chief, a threatened epidemic of infectious disease, a murder (especially by shooting) and the frequent occurrence of quarrels in the village.

In such circumstances, in addition to the ordinary pyapile ceremony described above, the cartridge sticks of the whole village are removed and all fires extinguished. The discarded sticks and all ashes of the old fires are carried to the meeting of paths, where the former are stuck upright in the ground and the ashes piled together; [372] this is done in procession, all the people taking part. On their return to the village new fire is made by friction by either the chief or his younger brother—usually the latter; fire procured in any other way would nullify the proceedings. Finally [783] all the people bathe in the medicated water used only by the chief at the ordinary ceremony.

751 776 In addition to this special form of the pyapile ceremony, another rite is sometimes performed after the occurrence of a murder or as prophylactic against the spread of epidemic disease. The doctor first makes a kind of trough (lokongwe) from the bark of mtondondo or mpingo, and procures a chirbilibo (or chipungulo) basket—used as a strainer in salt-making. Having collected his medicines he proceeds to the bank of the stream near the usual bathing-place of the village and digs a shallow hole, in which he places the basket; in this he puts the leaves of a certain thorny shrub and covers the whole with the trough, which is banked up with earth so as to be perfectly firm. He then puts his "medicines" into the trough; these are, first, the head of an iron hammer and a piece of slag, both from a smelting furnace. On top of these he puts pieces of the root of a certain tree which has many and particularly sharp thorns, and bits of bark from two trees peculiar for having very straight stems. Having distributed these evenly along the floor of the trough, he fills it with water and then proceeds to construct an arch over the end of the trough furthest from the stream. Two long poles, cut from a kind of tree particularly rich in sap, are planted in the ground, one at each side of the trough and close to it; these are bent over towards each other, and fastened together by means of a strip of their own bark. A bamboo is now planted alongside each, and similarly tied to its fellow. During all these preparations and throughout the ceremony it is essential that the doctor has no knots in any part of his clothing.

The preparations are now complete, and when all the fires in the village have been extinguished the people go in procession to the spot where the doctor awaits them. All must be poorly clad and must have no metal about them.

[622] The chief opens the ceremony. He steps into the trough and taking some of [769] the medicated water thrown in his hands he rinses his mouth with it. He then offers a prayer to the spirits of his ancestors, first stating the emergency and detailing the measures which are to be taken to deal with it (new fire, sweeping, discard of porridge-sticks and shaving). The prayer over, he splashes the water in the trough over his body and passes through the arch, first throwing some gift (beads or, in more modern times, money) into the trough. These gifts, presumably [756] intended as an offering to the spirits, are the perquisites of the doctor, and everybody is supposed to contribute in turn.

19: Sanderson D-9 (ca. 1920)1922 ??? Yao ???

The men and boys now pass through the arch in order of seniority; each splashes 751
himself with the water in the trough, but neither spreads nor rinses the mouth. The 796
women come next, led by the head-wife of the chief; the latter rinses her mouth
and, instructed by the doctor, repeats a prayer similar to that offered by her husband.
The remainder of the women merely splash themselves, like the men, before passing
through the arch. All then return to the village, where the *ngwijile* is continued.

Finally the doctor takes the hammer-head from the trough and hands it to
the chief, who rubs the haft into it, and, a hoe having been placed on the ground,
goes through the form of forging the latter by beating it with the hammer. He
then scrapes the ground with the hoe as if clearing a place overgrown with grass;
he does not dig with it as in hoeing up the ground for planting seed. After this
rite the chief again bathes in medicated water similar to that in the trough, and the
ceremony is complete.

Whereas the *ngwijile* ceremony and its adjunct, the rite of the arch, are now (198)
but rarely performed, as Yao will omit the rite of purification after a death in his 751
family. This ceremony consists of two essential parts, both protective against 764
the rebels, a disease characterized by dropsy and supposed to be contracted by 796
contact with a corpse, or by association, especially by sharing a meal, with those who 783
have been in such contact. The first of these parts is bathing in certain medicines,
which protects the bather from rebels, and the second consists of a sort of communion
meal, shared by all friends and especially relatives with those who have been
contaminated, and designed to protect those friends and relatives.

The decoction for bathing is made by soaking the roots of *Superbombacaceae* and 751
Sanderania in water, together with the bark of *mkomwa*, one piece each from the 783
east and west aspects of the tree; the water becomes a reddish tint, and the whole 824
body is bathed. 762

The communion meal consists of porridge made from any kind of flour or of (262)
rice, and some spinach leaves. In the latter some mashed and powdered root of
mtondongolola is mixed, with a little salt. All near relatives of the deceased must
partake of this meal, as well as their wives and their near relatives; part is carefully
put aside for the use of any relative unable to be present at the ceremony.

Lastly, since the spread of Islam among the WaYao, this rite has become (177)
confused with the distribution of food to the poor at the funeral of a Muslim, and (177)
the Arabic word *sadaqa* ("charity") is now generally used for it, to the exclusion
of its wider, correct meaning.

It may be mentioned here that after the death of a child the father is denied 766
access to his wife for a period of about three weeks, and the first act must be one 787
of coitus interruptus.

MEREDITH SANDERSON.

2: Mitchell E-5 (1946-1949) 1956 FT7 Tao FT7

strike out with his adherents to found a new village. A sum of £6 or £7 is a considerable amount in everyday Yao life where the annual cash income of the average individual is not much more. The leader of a dissident group is prepared to forgo this wealth to get one foot on to the lowest rung of the political ladder—that is by becoming a village headman.

Obviously there is a great deal of sentiment attached to the idea of a united village. To the Yao way of thinking a village is broken by fighting or death, and these evils are linked by witchcraft beliefs. The association of death and the break-up of the village is brought out clearly by the funeral ablutions of villagers after the burial of one of their number. An important ingredient in the medicine with which the mourners wash themselves after the funeral, is *ikala*. It is the earth from a particular type of terminary which is usually about 12 to 18 inches high, upright and almost cylindrical. The crust is very brittle and it is comparatively easy to chip off a piece. When this is done a mass of internal chambers and passages is revealed. The soldier ants, unlike those of other species that retreat into the darkness of their passages as soon as they are exposed, come into the open daylight and swarm in confusion over the fractured terminary. When I questioned my informant about *ikala*, he kicked the crust off the top of one of the hills and said, 'See all the houses in the village of the ants? I have broken their village. So it is with death. It breaks the village.'

The Yao believe that death 'breaks the village' and that conflicts through sorcery lead to death. Therefore, conflicts are the real cause of village splits. Hence differences must be settled immediately if the village is to persist, because if they last too long one of the aggrieved parties is sure to start using sorcery against its opponents. Those who do move away, go to a distant place because they believe that sorcery operates only where there is social interaction. But the fear of sorcery on the other hand is just as strong a force in maintaining the physical unity of the village. It is while the migration is being planned that sorcery is most likely to be used. This is particularly so if the village break is taking the form of a lineage split. This happened, for example, in Lupunje village.

Kalambo, the sister's son of Lupunje, wanted to leave the village and had gone to seek a suitable site. When he returned he found that

one of Mahomet's sons died, after giving birth to quintuplets, some thirty years ago. Deformed children are buried alive. A large number of children is always hoped for and where polygamy is practised, some families are of considerable size, although the mortality among young children is very high. It is, of course, very difficult to state the child-bearing period among natives. It does not start as early as is commonly supposed, and I think the conception is found within about the same limits as among Europeans.

Death. Natives of Nyamlanzi live to a good old age. That such is not the case I have found to be one of the many fallacious beliefs concerning natives which should be relegated to the realm of exploded theories, as I have pointed out elsewhere.[1]

Death in old age is recognized as a natural event but apart from this, all sickness and death were formerly and are still to a large extent looked upon as the result of the machinations of some person, an idea which forms the outstanding feature in their belief in witchcraft, magic.[2]

Here I shall mention the ordinary customs in the case of death. During the last hours of a mortal illness, a man is tended by his wife or wives, the head wife she constantly supporting his head on her lap or against her breast. A woman is similarly tended by her mother, sisters, and friends. As unconsciousness sets in and the extremities become cold, they say, "His spirit has gone and only the heart remains alive."

The native does not like the idea of lingering on and a man on his death-bed will say to his sons, "Now watch me that I die quickly." He may take medicine to help him over that time or he may give his sons instructions as to what to do. Should a man linger unconscious for a long time, friends will ask his sons, "Did he give you any instructions?" If he has done so, the sons will then carry them out. This perhaps consists of building themselves in medicines left by their father, while they stand on the roof of his house. Sometimes, the natives say of a lingering man, "Ah, perhaps he has eaten of a tortoise's heart!" Knowing the phenomenon of the tortoise's heart and believing that by partaking of it, the same property can be conferred on the heart of a man.

When death is manifest, the body is covered with a cloth by a brother, a son, or some other person in attendance. The eyes are closed, the mouth shut, and at the present time, the body straightened out. This, however, is a recent practice copied from the Anyanja, Europeans, and Mohammedans.

Horn of the death must be sent to the chief, and a messenger goes to his village where the chief and his people sit in the village open space. He carries a fowl in his hand. The [illegible] of a single fowl calls the chief and his people. One of the chief's men, seeing the messenger approach with the single fowl, will jump up and take the bird. He is joined by the others and they go away to the cross-roads where they kill the fowl, pluck it, cook it and eat it. In the meantime, the messenger delivers his news to the chief who will produce from his house about eight yards of white calico; if the deceased has been a much respected

[1] Hugh S. Stevens, "The Witchcraft of Angoni", (Lancet, April 11, 1914, p. [illegible]). [2] Vide infra, p. [illegible].

against all evils — witchcraft, attack by lions, etc. The elements then set about building 981
shelters in which the wali will remain during their term of instruction. According to the
number of the wali or the number of places where shelters are built may vary from one, two,
or three, to as many as eight. Each of these places is called *N'dapalo*. They may be many [394]
miles apart and are so placed for the convenience of the mothers in various groups of villages
who bring the food daily to the group of boys from those villages.

The boys when they originally left the village were wearing a large bark-cloth covering,
with beads and collar, which latter articles have been taken by the *n'mbiliko* and his as-
sistants. At *N'dapalo* they wear simply a loin-cloth of bark.

During their stay at *N'dapalo*, the wali are given animal names by the elements who [333]
carry on the instruction of the boys until their return to *Lapanda*, the *n'mbiliko* having
gone back to his village immediately after the circumcision. The names given to the boys [551]
are commonly names of beasts of prey such as *Ndibule* (*Ndule* = the jackal), *Ndimwani*
(*ndimwani* = the leopard), etc.

Certain restrictions as to diet are laid upon the wali by the *n'mbiliko*, e.g. no meat of 88
an animal killed by a beast of prey, no mushroom, *ndumbule*. He will not allow any villager 264
to visit *N'dapalo* after seven p.m. and visitors may only be men who have been through the
ceremony. An uninitiated man is called *ndulule*, one who has not been to his *Unyago*.

Other restrictions as to foodstuffs may be made by the elements, generally in connection
with the mythical origin of such food substances. A finger-shaped yam called *Ipate* is
taboo, as it is said to have first sprung from the grave of a leper, the inference being obvious.
After the *Unyago*, the boys have to undergo a special doctoring before they may partake of
them. Bananas and rice are similarly refused them, the latter on account of a story to the
effect that rice grew from the nostrils of a dead man, the idea doubtless having relation to
the resemblance of rice grains to maggots. Fish is denied them by some masters of cere-
monies, as it is said to have originated from the diaper of a woman which she threw away [325]
while bathing.

Each *n'mbiliko* may have special observances of his own. One near Zomba caused all
camera to be roasted in a certain way. Rows of pieces of camera were placed in split [252]
bamboo spits and so roasted before the fire in the manner of fish. If roasted in the ordinary
way, the camera would split and show the white floury material inside, signified by the
yarb *ka-kapale*. If this is eaten by the wali, it is said that the prepatial wound would reopen.

The length of time spent at *N'dapalo* varies from four weeks to as long as three or four 881
months. In the first place they must wait till the circumcision wounds of all are com-
pletely healed. Delay may be occasioned by complications having arisen in some cases.
Again, permission to return may be withheld by the *chief* for some reason or other.
Should one of the wali die at *N'dapalo*, the body is buried out in the bush and nothing [766]
is said to the parents until after the ceremonies are over and all have returned to the
village.

3: Stevenson D-5 (im. 1918) 1952 FT7 Tue FT7

or after the return to the village. The boys often wear all their headwear and new cloth for several days; after carrying their *ngaage* for a similar period, they give them up to their elements. Together they go into the bush where they break up their wands and put them either into a pit or in the forked branch of a tree. Before the *n'ninkile* leaves, he brings to the chief all his takings and these are divided between them.

Mention has been made above of the *ngaage* and it now remains to consider them more fully. The figures vary in subject, in number and in arrangement. At the ceremony at Kwoimma's, the following were arranged in a long line beginning with the whale and ending with the python before *shing'ambong'ngo* (Pl. X, fig. 2).

1. *Hakangwai* ..... the whale (Pl. XI, fig. 7).
2. *Ngwem* ..... the crocodile (Pl. XII, fig. 1).
3. *Chimi* ..... the leopard (Pl. XII, fig. 3).
4. *Mbanda* ..... the zebra (Pl. X, fig. 6).
5. *Ngoko* ..... the only animate (Pl. XII, fig. 2).
6. *Nimmanda* ..... the hippopotamus (Pl. XIII, fig. 4).
7. *Kwapo* (unknown?) ..... (Pl. X, fig. 5).
8. *Mbalapi* ..... the white antelope (Pl. XI, fig. 8).
9. *Wakangwa na shimm-kalala* ..... the woman dead in child-birth (Pl. XIII, fig. 3).
10. *Lyamo* ..... the sun (Pl. XI, fig. 4).
11. *Likalam* ..... the scorpion (Pl. XII, fig. 6).
12. *Mbala* ..... the plate (Pl. XI, fig. 6).
13. *Limmanda* ..... a kind of cloth (Pl. XI, fig. 5).
14. *Ngwi* ..... the lightning-dwarf (Pl. XIII, fig. 4).
15. *Bakam* ..... the iguana (Pl. XII, fig. 4).
16. *Wanda* ..... the moon (Pl. XIII, fig. 1).
17. *Lipakam* ..... the wild pig (Pl. XI, fig. 1).
18. *Sangala* ..... the hare (Pl. XI, fig. 2).
19. *Kam* ..... the python (Pl. XIII, fig. 2).

Beside these, *Ngwem*, the lake, nearly always appears;[1] *Mwezi*, the moon, the drunken woman, and certain animals may be represented, and in addition, *shinto*, "the dwelling place of all the old spirits." Each particular *n'ninkile* has his favorite figures about which he sings, always commencing, however, with the whale.

Reproduced here is the series of *ngaage* at Kwoimma's village sketched at the time of my visit. It seems probable that originally the same set of figures was always reproduced. It is hard to trace their significance with any certainty. Natives aver that they are made only for instructional purposes. "The animals are made so that the boys may recognize them, while some of the other figures have reference to customs." They deny the more in-

[1] Cf. Stevenson and Dayas, 'The initiation ceremony for boys among the Tao of Symbaland,' op. cit., Pl. III, fig. 2.

D-Stacks D-6 (no. 1912) 1952 F'57 Tue F'57

T18
B6

interesting possibility of a totemic origin and it is, of course, true that at the present time the Yao have few clan names referring to animals and practically no clan food taboos.

At Mlungwila's village in September 1953, I saw the *ingoge* figures being made. The long grass was cleared away and the earth heaped up into heaps, roughly of the shape and size of the figures to be made. A number of women were employed carrying water from the stream with which the mounds were well moistened and moulded into more definite form. The outlines of the figures were then drawn in, all by one elderly man, with flour measured on by hand. In drawing *nahungwani*, it was interesting to note how the efforts to keep to symmetry failed.

Of *ngwenu*, *chinei*, *ngulu*, *ndumuulu*, *mbulupi*, *mbiti*, *lipulowe*, *ntu*, I have little to add; the well are told of their habits, whether they are good to eat, whether they are dangerous, etc.; and all the stories about them. *Mbunda*, the zebra, is always represented in duplicate for some unknown reason. *Swapulo* is pointed out in reference to a story the boys have been told at *Ndapulo*, namely, that the hare is good to eat but they must not eat it till after they are married and their wives have borne children; otherwise they will be children. The superstitions regarding the hare is mentioned elsewhere. *Njoni* is the hypothetical knife-like animal which flies above the clouds and is seen as lightning. *Lilembulu* is a cloth which the Yao used to wear. In the presence of his chief, a man must not throw a fold over his shoulder. *Mbulu*, the plain, refers to the chief's plain from which he rule. *Likolowe*: It is said that the old people used to eat scorpions and the people of Mangoche, Amangoche Yao, used to call the Amachinga Yao the "*Mikolokolo* eaters." *Lipuwe* is the sun, the giver of daytime. *Wakungwe* is a representation of a pregnant woman who has died unchildbirthed because her husband was unfaithful. This is a well recognized superstition and one among others of equal moral value, introduced into the youths during their stay at *Ndapulo*. Though rough, *wakungwe* is a very realistic figure. The woman is evidently lying down, as one hand supports the head, the other hand grasps the thigh as if she were in pain; the breasts are made large and the figure being in relief, the prominent abdomen, and expanded umbilicus are noticeable features. The face and pudenda are moulded in clay and superimposed on the earth figure; a maize cob stalk is placed in the anus to counteract the sole-bottom worn by women.

In contradiction to *wakungwe*, *mundu* is symbolic of the man who has led a proper life and is blessed with a child. The child is shown on one side. On his other side is seen a conventional illustration of a spear, possibly to indicate that the figure is that of a man. I am not very sure about *Kanga*; it may be meant for *wakungwe*, the woman who officiates at *Liliuw*; there is nothing about the figure to suggest a woman and I could learn nothing concerning it.

Nahungwani: There appears to be some difference of opinion about this animal. Formerly I accepted the translation given by Scott,[1] namely, the whale. Others have supposed

[1] David Clement Scott, 'A syllabic dictionary of the Mang'anja Language,' Edinburgh, 1892, p. 431.

9: Oceania D-5 Jan. 1910: 1932 ?"? Yes ?"?

that the word refers to some large animal which lived or may still live in the big lakes. The older natives say of nulungwani that "It lived in the big sea at Zanzibar. It would come and lie on the surface of the water, maybe near a village; then the people would go down and set harpes of sand off without its knowledge; the wounds healed up immediately. Meat from different parts differed; some was nasty to taste. It was a very large animal indeed and never lived in the lakes." They distinguish it from *Ngwe* of the *Anyanja* which was "bigger than a hippopotamus but not as big as nulungwani, lived in the lakes of Nyasaland, in the deep parts as at Tundu on Lake Chilwa; was very fierce and killed the hippopotamus; would upset canoes. There are no more *Ngwe* but probably there might be." One of my informants, a man of forty, said his father had been told of them by his father, but he had never seen them. At the present time, older natives say that the nulungwani used to live in the lakes but they seem really to refer to *Ngwe* and I think lessness of speech only accounts for the idea that the word refers to anything but the whale. Hetherwick translates nulungwani as a large fish figuring in the initiation ceremonies;[1] a poor description, since it always has four limbs. The word nulungwani meaning a whale, occurs among the Mchiwambo people who live at Quilimane. These people do not make any figures on the ground at their circumcision ceremonies but it is interesting to note that their well carry stuffs similar to the sponge on their return to the village. I think, therefore, there can be little doubt that the word refers to the whale which was probably well known to the Yao before they migrated so far inland as Nyasaland. Whether the word was adopted or not in these parts in the past and used for some indigenous animal now extinct, one cannot be quite sure, but I think it is improbable; I believe the confusion with *Ngwe* is of quite recent date. *Ngwe* itself appears to have been some large mammal of the hippopotamus type, extinct probably for some time. The *ch'ma* of *Ngwe* resemble those of the monster of Lake Ngami and are not without interest. The most weighty evidence against the animal now depicted at the *Ungwe* and called nulungwani being a whale, is found in the representations themselves. It has a neck with a knob at the junction of the head with the body and a second knob at the junction of the body, tail and hind limbs; the tail is well marked. The "webbing" between the limbs is, I think, a means of finishing the figure and is not supposed to represent some anatomical feature of the beast. The same is, I think, true of the markings, lines, dots, etc., which are purely decorative. Reference has already been made to its tusks. The little mounds on either side of the body of the animal, on one side within the "webbing," are spoken of as the "little hills" and are not suggested breasts as one might imagine. The hollows have no significance according to my informant except that they are where the *n'wichila* stands; the mark which looks like a native hoe, I believe, is meant to represent the hoe which has been used in making the figure.

Chinyam, the lake: the photograph in the article by Dr. Davey and myself of *Nyam*[2]

[1] Op. cit., p. 300. [2] Op. cit., Pl. XII, fig. 2.

D-Sweeney D-5 (on. 1912) 1922 F'27 Yes F'27

[illegible] 1913 [illegible]

of the hut, *chwipiala*, and the end part of the house of the women, doubtless on account of its shape, are used as medicine for this disease.

Entolopepere or Ndoko: If a man dies and his relatives eat of the food-stuffs left by him, such as corn from his grain-store, before they have been cleansed by medicine, they will sicken with ndoko, the symptoms being anorexia and vomiting. The word *kotoko* which is also used for sickness due to partaking of food cooked by an unfaithful wife.

Chiputo is a word used by both Tao and *Anyanja* to denote a disease which a man contracts from adulterous intercourse. Scott[1] derives the word from *ku-puta*, to stick to; the woman is so bewitched by medicine made by her husband that should any man have adulterous intercourse with her, the disease will "stick" to him, while it will not affect the woman herself nor her own husband. Both the disease and the medicine made to cause the disease are known as *Chiputo*. Secondarily, the word has come to be used for any disease which may be gained by sexual intercourse and is sometimes used as a general term for venereal disease.

Chiputo cha chipala (*chipala*, a knife): A man who is going away from home obtains medicine and destroys his knife with it. As he leaves his house to go on his journey, he pretends just to remember his knife and calls for it. His wife brings it to him and it is put into his sheath; he then goes out and sticks it in the grass of the roof of the house. The medicine is made from the tail of a dog, an animal in which coitus is prolonged and the two animals cannot separate. Should the wife commit adultery, it is supposed that just as the knife was condemned and destroyed with dog medicine, so the adulterous pair will remain fixed to each and be found out. This may be called *chiputo cha kutoga* (*kutoga* — to set a trap).

The *Anyanja* make medicine with the same idea, *chiputo cha kutowa* (*ku-towa*, to set a trap, Chin.); medicine is put round the house and any man crossing the medicine and committing adultery with the wife will be trapped. In all cases, the man will become ill.

Chiputo cha mimi, *mimi*, blood (*mwazi*, Chin.): disease caused by intercourse with a menstruating woman. Blood is passed in the urine.

Chiputo cha mwera, *mwera*, pus (*mafuqa*, Chin.): practically means gonorrhœa.

Chiputo cha timoji, *timoji*, cotton (*ponje*, Chin.): the discharge from the urethra resembles a thread of cotton; it is supposed that this thread can be pulled out endlessly.

Chiputo cha nzimbu, *nzimbu*, the white-ants (*chiuza*, Chin.): so called when a man passes whitish-yellow debris in the urine. It is supposed that when he has finished passing water, white ants rush up the penis and enter the bladder, thus causing the pain which characterises this affection. The origin of the idea lies in the fact that if one sprinkles water or urine on the ground near white-ant burrows, the ants will come to the surface of the ground in numbers and make a rustling sound.

[1] D. C. Scott, A syllabic dictionary of the Mang'anja language, op. cit.

Other hypothetical diseases which are caused by disturbance to nature are mentioned under various other headings. *Kwiye*: a disease generally characterized by ulceration of the legs but in some cases by pains in the back, or loosely used for a variety of symptoms. It is said to be caused by the entry into the body of a worm which lives in water-pools. This worm which I have had identified is a gordian worm and not known to be parasitic in man. *Lumi*: When a man kills another in battle, he will sit upon the belly of his victim; otherwise he believes he will sicken with lumi and his own belly will swell up like that of the corpse whose putrefaction sets in. He is supposed also to hunger after more killing and blood. *Lilungu* is the name of a supposed disease which kills off one child after another in a family when they are about six months old. Congenital syphilis naturally suggests itself but I have never been able to verify this idea. *Lilungu lya kututa*: a supposed disease which causes the death of the first child when the second is born, the second when the third is born and so on, whatever the intervals between the births. Each child is said to push (ku-tuta) the previous one out of this world. Under these circumstances the disease is ascribed to something wrong with the mother or father and they are examined by a medicine-woman or medicine-man, and any curcumbas or an external pile found will be cut away.

If a snake inflicts two bites, the case will prove fatal. If a crocodile emits a grunting sound when seizing its victim, though he escape he will certainly die.

Treatment of diseases. Of surgical treatment there is very little to be noted. Nothing in the way of operation is performed with the exception of circumcision (see *Legends*).

An abscess is allowed to burst, the smallest tumor is left untouched, but accessory digits which are not rare, attached only by a fine pedicle, are snipped off.

The natives cannot extract teeth. They are incapable of rendering any assistance in cases of difficult labor. Dislocations are not recognized as such, but fractures are treated by the application of wooden sticks placed at intervals round the circumference of the limb parallel to it and held in position by twisted pieces of bark string (Pl. XXII, fig. 3). The principle of the tourniquet appears to be unknown.

The only instruments used consist of a small knife for incision, a cupping-horn, and a primitive form of funnel for administering enemata (Pl. XXII, figs. 1, 2, 4). The knife has a triangular blade with a stem which is commonly twisted at one of the corners. The knife is used for wet-cupping, tatooing, and circumcision (Pl. XXII, fig. 2). The cupping-horn is a small horn of a calf. The apex is pierced and after application to the part, suction is made with the mouth and then the hole sealed by working a piece of beeswax over it with the tongue. Six small incisions are made in the skin for the withdrawal of the blood. The cupping-horn is called *chuni* (*ichuwiko*, Chin.). Cupping is used for headache and for pain in the chest and back. The enema funnel, *chipulya* (*ntimbiri*, Chin.) is made from the neck of a gourd to which is attached a hollow straw for introduction into the anus. Half a pint of an infusion of *nsungwi* is injected for constipation associated with pain.

Again, charm medicine may be contained in various articles which are also generally worn round the neck. The teeth and claws of the beasts of prey are so employed, generally arranged in pairs bound together so as to form a crescent and suspended from a string. The teeth of crocodiles, lions, leopards, and the claws of the same beasts and of some large birds of prey are thus employed. The teeth etc., are in themselves charms against injury, probably against what one might call homœopathic injury. The idea of stuffing them with medicine is probably a secondary consideration, a process of fortification of the charm so that its use seems to have a more powerful influence. It is interesting to see of late years that the natives, recognising the decorative value of these crescent-shaped amulets, has begun to copy them in lead and ivory. A series of them of graduated size is worn as a necklace by women.

When a medicine-man is consulted, part payment is made in advance, "payment to go and dig medicine (roots)." The rest of the payment is made when the cure is effected. Should a patient not be satisfied with his treatment and wish to consult some other medicine-man, he pays to the first a quarter of the fee he would have paid if his cure had been effected; this is called "paying him to get his medicine away." Unless this is done, should he recover later, he will be liable to claim for full fees from all of the medicine-men he has consulted; each will say his own medicine has gone on acting and has effected the cure. A medicine-man may take a man he is treating into his own house.

In prescribing medicine, very particular instructions are given with an embargo on certain things which may or may not have some use and significance. A medicine-man in 1901 at Malenya's, who inoculated every one in the foodstuff with bullet proof medicine, said that no one must step across a mortar (pestle for pounding grain), and no one must eat the leaves of the sweet potato.

A medicine-man always partakes of part of the decoction he is giving to a patient to show that it is harmless; I think these preparations are mostly inactive. I should hate to sample all the castor oil I have prescribed, though many natives have had suspicions about me when I have not done so.

Poisons. Though there are a large number of species in this country, both vegetable and animal, from which poison might be extracted, those that have gained any reputation among natives and have come under my observation are but few in number. *Mwai* (*Mwabwi*, Chin.) "the ordeal poison," is the bark of *Erythrophleum guineense*. The natives distinguish two varieties of *mwai*, the two trees differing slightly in leaf, flower and bark; *mwai* is the *Erythrophleum guineense*, the second variety known as *mpanyijile* is doubtless an allied species. *Mwai* is the poison employed in the poison ordeal.[1] It is administered in a poisonous dose as a decoction of the bark, recovery or otherwise depending on whether or not the poison is voided by vomiting. Natives give as the symptoms headache, giddiness, disturbances of vision, vomiting and purging, with slowing of heart beat. *Mpan-*

[1] Vide infra, p. [illegible].

The father of one of my servants helped to clear out the remains of a body from his grain store on one occasion and shortly afterwards, it is supposed that his own sons who had said they could not allow it to go on any longer, employed some one to kill him, so he was found, one day, with his head smashed in. There are, I believe, a number of similar cases known. 266

A person is supposed to gain the powers of wusai by procuring medicine from some one willing to sell his secrets at a price, and by performing certain rites usually associated with his method of bathing. It is said that "such and such a one takes his bath on the top of an ant hill" or "on the roof of his house by moonlight." The usual initiation into wusai is a long business, the individual being successively initiated into all the various practices of sikoma, the supernatural. Medicines are made from a still-born child, from various plants, from the hyaena, etc., and used for preparing the individual to the new sikoma. He is introduced to the hyaena, the fox, etc. It is also asserted that a man may acquire supernatural powers by having sexual intercourse with a near relative, a sister or mother. I have had pointed out to me an old man who is said to have wished thus to acquire power but the women refused and he has been a laughing-stock ever since. 754 576 [838]

On one occasion, a man related to me the pathetic life story of his attempt to find his favorite sister who, like himself, had been taken away to the coast as a slave. In desperation he has adopted the above procedure to try to gain supernatural powers to help him but without result. It would therefore seem to be a method not particularly associated with wusai.

The wusai is supposed to bring about the death of his victim not by administering poison or other such direct means, but by the more subtle mode of making medicine "against" him. When the victim has succumbed and is in due course buried, the wusai arrives at the grave to secure that for which he has been working. To the wusai is attributed the power of making himself invisible, and of taking the form of an animal; owing to the carrion-eating habits of the hyaena, this animal form is most commonly taken. Other animal forms which are associated with the wusai are the leopard, the fox, and the owl, all night-going animals. The Yao say, "The cry of the fox (ambal) is heard at night because he meets he associates with wusai doings." 754 [825]

Arrived at the grave after sunset, the wusai blows his horn, the horn of a small antelope, to call his brethren; a fire with a blue flame is made by the grave and around it they dance, or the grave may be illuminated by blue flames without a visible fire. The wusai calls upon the deceased to rise from the grave, addressing him by the name he bore before he was initiated, i.e. his child-name. Obeying the summons, the dead man rises to the surface of the ground, though how he comes out is not quite clear — " the hole may be over so small." The risen dead is then killed again by magic medicine and his body divided to be eaten by the congregation of wusai. It is said that the skull is made into a gourd, the eyes are used as beads, and the ribs formed into a girdle. [264]

Tagalogo was another well-known performer; he used to do the same tricks as Kawanja. He also was possessed of an elastic skin and is said to have been able "to do his own tricks together behind the back of his head." [illegible]

Mjoekutula, a Tao of Mikanda, is a man with considerable resources. He is said to be able to produce a lion at will from a lion's tail and claw. He would offer to show this if there were any lions enough to go through with it. On a moonlight night, he would require on the ground in a cleared space near a village the tail of a lion held some-wise in a piece of split bamboo. At the split end of the bamboo, he would place a lion's claw and round this, a woman's hair held in position by three bamboo pegs, around which he would draw a circle of whipped flour. Everyone would then withdraw to a hut in which the women was to take place. After an hour or so, Mjoekutula would send some one out to inspect the lion's tail where probably all would be found intact. He might then pretend to be uninterested and sleepy and suggest that some one should go out again in half an hour. Sooner or later, a man would come back, having found the tail gone; then everyone would go out to see what had happened. The pegs would be found in place but the tail and claw gone. A little way off, the split piece of bamboo would be found and further still a head or two from the woman's hair. Then, Mjoekutula would pick up, and leaving a little trail of flour on their way, all returned to the hut, while he whistled as if nothing were wrong. Suddenly they would be aroused by the sound as of a lion breaking against the hut walls, as the beasts are known to do, and next, a loud roar. Mjoekutula would immediately open the door half-way so that the people could look out into the moonlight and there, a little way off, would be the lion. It would immediately advance towards the house and then, as it prepared to spring for the door, Mjoekutula would offer it some of the flour in his left hand, around with a stirring stick, swiftly, in his right hand. As the lion landed, he would strike it on the head with the stick and lo and behold! the lion would vanish and the tail and claw would be found in his hand.

Superstitions. Scattered throughout these notes, particularly under Usual and Unusual, mention is made of practices which show a strong belief in superstition. Below are given a number of minor beliefs, and it is interesting to compare them with many well-known superstitions in other parts of the world. [771] [784]

1. A child who cuts the upper incisor teeth first will be unlucky. Such children used to be killed by the Tao. (Other tribes make medicine against the threatened ill-luck.) [777]

2. A woman with polydactylism may not take food out of a corn-store. Otherwise the stock of corn will not last long. (Rudimentary sixth fingers are not uncommon.) [732]

3. An insect called *chiqueo* *ceni* which lives in the sand at the bottom of pools, if killed causes the water to dry up. [723]

4. If a boy puts a water-spider in the armpit when learning to swim, he will learn quickly.

5. A man wishing to prevent rain falling on a day he is making a journey, will wrap some of the leaves of the *mimosa* tree in his loin cloth and go without drinking. [824]

16. That portion of the gut of animals having holes of some membrane beside, may be seen only by old people past the child-propagating age. If a young woman should see it, she would have difficulty in labor.

17. It is believed that people who see two [illegible] of a little fish like [illegible] called [illegible] get abortion of the breed by the wedging together of the two. The treatment adopted is to pass up the rectum a smooth stick with a pad of rag at the end. This means be done by the person himself and as the aid of another has to be called in, only an intimacy, such as the relationship of brother-in-law gives, will warrant this service being asked.

18. The Tao believes that there is a little insect which lives in the ear, called [illegible] Spiriggle, which tells the person what is said to him, the ear being its resort. The pupil is called [illegible] jan kin, the child of the eye.

19. Among women, the uterus is called [illegible] (uterus = eyes). It is supposed to be a little person who holds the foetus. When the child is born, [illegible] and starts looking about, the [illegible] causing the afterpains.

20. A man making his first journey to the coast used to sprinkle himself with water from every stream he crossed to give him a safe journey. In the same way, women at the present day going between Kanka and Manyuw sprinkle their babies with water from each stream.

21. An anti-like insect called [illegible] (Lumbricus, Chin.) [illegible] is lucky. On seeing it a native puts his belly and then rubs his eyes, wishing for plenty of food that day. If he is embarking on a journey or beginning some enterprise, he will wrap one of these insects in a fold of his loin cloth and take it with him for luck.

22. When a native hears the mango bird call (its call is like the mew of a cat), if he wants something, he immediately says, "Oh mango, I want so-and-so. Be quiet and I will then be quiet, too!" If the bird ceases calling, he knows the wish will be granted. The female bird is said to be the more certain prophet.

23. The snake, [illegible], which lives in trees and is of a buff clay color with green markings, is said by natives to pierce the chest and tie a knot in itself on each side so that it can only be withdrawn by cutting off one knot. When the snake is thus withdrawn, its blood mixes with that of the man and he will die.

24. Najiwes have a habit of marking the spot where any event takes place by a stone by the side of the path, and every passer-by will add a stone for luck. In this way some large piles of stones have been made.

25. A man resting on his way home from a long journey places a stone in the fork between the branches of a nearby tree, so that on his arrival he may find his wife has put by some food for him and has not used up the day's stock of flour.

26. A shamadown found digging in the path is said to presage the death of the finder's nearest relative.

[illegible] 30. If a shamelessness is found holding on to the grass at both sides of the path, the path is "closed" and a man will turn back to his home and not proceed on his journey. It would be unlucky to continue.

[illegible] 31. Snakes seen in sofa are a bad omen.

[illegible] 32. The slow-worm known as Shambala mangala ("the native opon. of not kills"), and the only antimier, if seen on the path, are of bad import.

33. To knock the toes against a stone on a journey is bad luck; if blood flows from the big toe, it portets to good luck.

34. A man knocking the side of his foot against a stone knows that some one is speaking ill of him.

35. A person whose hands itch knows he will receive a present.

36. Tremor of the circumorbital muscles of the right eye indicates that something good will be seen. When the left eye is affected, the outcome is less sure.

37. The cry of the bird ngulubulu (the green turaco), indicates to the hearer that he is about to meet some one, either friend or enemy.

38. Anyone who kills one of the large chik-lizards (Phacochoerus) knows no chikuse chinjiga, will always be breaking the cooking pots afterwards.

[illegible] 39. The natives believe that the caterpillar of the Hippotion celerio moth will jump at the breast. It is called chikumbilo mumalo, "that which jumps at the breasts," and children seeing it will cover up their nipples with their hands.

40. Of *Lindu*, the Mongoose, there is a saying:

[539] "*Lindu pagwichimpuse ukilu!*"
"The hooded mongooses relieve each other (at) the mound!"

It is said that mongooses assist one another when being hunted. When one is tired, a fresh one runs in to show to the pursuer that he goes after this one and leaves the tired one, and so they keep it up till the pursuer is exhausted.

41. *Chiula*, the frog. Children are told they must never kill a frog, or his spirit will come at night with porridge made of excrement and make them eat it. If a small child playing with a frog kills it by mischance, he will tear off a small piece of his native cloth and place it by the frog as an offering.

42. *Chindindi* (Kimpuse, Chin.) the wound. It is said that the wound hides its body and leaves exposed its nose, so that a chiduna seeing it, goes up to peck at it, whereupon the wound turns round quickly and catches the chiduna with its mouth.

43. *Chingwe*, the skunk (from *kwenga*, to go to steal), so named on account of its odor, is said to apply the nose to a rat-hole and make wind. This will render inaudible all the rats in the burrow and he can then dig them out at leisure.

44. *Mbuli*, the honey badger, when hunted is always said to attack a man by attempting to seize the testicles. Natives who hunt this animal, tie stones in their kilu clothes so that they hang down between the legs to defeat the badger.

[illegible] setting out on a journey may ask the intercession of his deceased father to secure his safe conduct.

The spirits of the dead are in general said to dwell "above." They haunt the graveyard or visit the scenes of their life, and may be associated with natural objects or with certain animals, into which they are supposed to enter temporarily. Thus a dead man's spirit will visit the earth mound which marks the site of his old house in the village. The spirits of headmen are often thought to haunt the big trees of the village open space; such trees are held sacred for this reason. Some time ago in the old village of the chief, Malenga, a party of women cut down one of these trees for firewood, ignorant of its sacred character. With the crash of the falling tree, they became frightened, and one of the present Malenga's elders came upon the scene, predicting all kinds of evil to follow unless reparation were made to the insulted spirits of the dead chiefs. The remains of the tree lie there to this day, untouched except by natural decay.

To quote another example, near a bathing pool called *japanali* (from *ba-jipa*, to bathe, and *nali*, the initiates) where boys bathe after initiation, on the Dzenzi river, there is a small cataract whence a cloud of spray rises and a continued rumbling sound comes forth. Here, the old men say, you can hear the drumming of the spirits, while you may see pythons and the crowing cobra in whose bodies the spirits live.

As I have already mentioned, the spirit-world so far as the native has speculated on the problem is "above" in a semi-materialistic heaven. If questioned closely, the phrase "I do not know" will figure largely in his replies. He will not say there is any "marriage or giving in marriage." If a child dies, they often say, "So-and-so (some deceased person) wants a water-carrier." Indeed they often use a phrase under the circumstances identical with an English expression, "They are calling away the children."

Natives attribute to the spirits of the dead the power to partake of anything on this earth, such as food. They have no exact ideas with regard to animals and what happens to them when they die. They will not tell you that an animal has an entrance but at the same time, a goat is often killed at a funeral, with the remark, "The goat will follow the dead man." The goat's meat will be eaten by those assisting at the funeral; hence there is the suggestion of the idea that animals' spirits do go to the spirit-world.

In referring to the spirit-world, the native generally uses the word *ba-malenga*, and here we have the second element in their religious beliefs, namely a supreme being; *ba-malenga* means at the place of or with *malenga*, the supreme being. *Malenga*, however, takes a very secondary place to the ancestors. He is referred to only in a general way. In answer to such questions as why has a woman an albino child born to her, she will say "*Malenga* made it so"; in fact in reply to many questions to which the native has no answer, he will use practically our English phrase, "Oh, God knows!" and with about as much meaning.

To *Malenga* is ascribed the sending of the rain, but apparently he has no part in giving good crops or causing a plentiful harvest, neither has he any direct interest in man's affairs,

824 778 be supposed to live in such trees. They are convenient natural objects for them to occupy, in fact practically the only ones to be found in villages. Trees may secondarily, therefore, be looked upon as in some degree sacred. About such trees strings or pieces of calico may be placed as an offering to the spirits of the departed. But the Yao do not erect little huts in their vicinity, hung about with strips of calico as is the custom among the Anyanja.

775 Macdonald[1] mentions the spirits in connection with Soche and other hills round Blantyre and supposes them to be the spirits of the places themselves. This I think is unlikely; they would probably turn out to be spirits bearing the names of long departed Anyanja chiefs whom the immigrant Amangoche Yao venerated just "to be on the safe side," since they had come and taken the country which long ago belonged to the former tribe. When approaching or passing any spot held to be the dwelling place of spirits, salutation is made by clapping the hands.

Spirits of the departed may enter into animals or may take the form of animals, [825] commonly lions and sometimes large snakes (python), but this belief is not so general among the Yao as among other tribes, in my opinion. An animal which is so possessed is called *lisyuka*, from *ku-syuka*, "to be transformed."

[774] Apart from this habitation of inanimate objects above mentioned by *maimu*, there is nothing that points to a belief in Animism among the Yao, so far as I know. Neither hills, rocks, streams, lakes, nor trees have their own spirits, nor are they endowed by the native mind with life.

Deceased persons appear to the living in dreams, the native apparently believing that the deceased appears in his material body.

775 787 791 They believe also in revelation of wishes of the deceased through the medium of the living. The spirit of the deceased is supposed to enter into the medium. The medium, I am informed, is always a woman, never a man. From the descriptions of some of these revelation séances, there can be no doubt that they are manifestations of *la grande hystérie*. The medium works herself up into a frenzy of excitement and in her delirium gives out the name of the deceased, the voice which speaks being that of the spirit within her. She rolls on the ground and foams at the mouth, uttering the word of revelation which is generally to the effect that some deceased chief's spirit is feeling aggrieved at the neglect of his tomb; the voice may go on to say that certain practices are forbidden, or demand that certain rites be observed by the people. The spirits which possess her are generally spoken of as *masoka*, a word which, though sometimes used as equivalent to *maimu*, usually seems to [158] have rather a sinister significance. Insane persons are called *masoka* and are thought to be possessed by a spirit, and vapor baths with exorcism may be practiced for their cure. In the case of the death of anyone who is possessed, in answer to my interrogation, I have [761] been told that both the spirit which has entered into the man and his own *maimu* leave his body.

[1] Op. cit., vol. I, p. 70.

3: Stannus D-5 (ca. 1912) 1922 FT7 Yao FT7

539

40. *Gomera kwala ntuhuta!*
Lying on the rock, heat!

This is a slang expression which in full would read, "It is nice and warm lying on a rock in the sun, but it is not so comfortable as being in bed in company with your wife; you can go on waiting but you won't get anything." This might even be said to a dog, watching as a dog will, every morsel of food lifted to its master's mouth.

41. *Kulupikila mesi ya mbiru!*
To have hopes of water for maggots!

It is a custom before lying down to sleep on the floor mat, to take it up and pour boiling water on the earth floor to kill any blood-sucking maggots (Congo floor-maggot, *Auchmerompia*). If you see a pot cooking on the fire, you naturally think there is food being prepared but you may be disappointed; it may only be the pot for heating the water to kill the maggots. The saying is thus used to a man who has made an assignation and is disappointed but goes on waiting. [513] [751]

42. *Kulumu upru!*
To bite cockroach-like!

The cockroach is described by natives as going up to what it will eat, remaining quiet for some moments, and then suddenly taking a bite. This is said of a man who comes up to you smiling and then hits you a hard blow. [825]

Among the Yao as among other tribes that I have previously mentioned,[1] signs of salutation to a superior are made by clapping the hands or patting the breast or buttock with one hand, at the same time crouching down. A woman will go off the path and kneel, looking away from a superior passing along the roadway. 576

A person going by the door of a hut where others are sitting, will say "*Kumlango kuno!* At the door here." Passing behind anyone, he will say "*Ku-ayu^ma!* At the back!" Meeting anyone on a path, a man will simply say, "*Icho*, here," adding perhaps, "*Ku-chela!* all is well!" A chief or headman on returning to his village after a journey, is greeted by the women with trilling of the tongue (*Ku-lulula*). [201]

Man and wife do not greet each other in the morning. The wife rises first and draws water and places it in the hut for the husband's use but nothing may be said.

When a visitor is entertained and a chicken cooked for a repast, the "pope's nose" is always for the visitor. The right hand only is used in dipping into the common pot. A man of small importance, though replete, will go on making pretence of eating at a common meal by taking very small amounts so that his superior shall finish first, and rise and go away before him.

I may here add the words used by the Yao for the sounds made by various animals; they are interesting to compare with those of other languages: 192

[1] 'Notes on some tribes of British Central Africa,' op. cit., p. 261-262.

3: Stannus D-5 (ca. 1912) 1922 FT7 Yao FT7

no one will touch. With the exception of carrion birds such as the crow and the hawk, most birds are considered fit to eat. The hornbill is not eaten, as it is supposed to carry part of a corpse on its nose.[1] Fowls form a regular article of diet, but some taboos in this connection are mentioned elsewhere.

Eggs are eaten only by children and old people; that is, by those outside the child propagating age. Milk is never consumed in any form. They say, "What a disgusting habit, to suck the juice of an animal while it is still alive!"

Pregnant women will not eat certain things lest the child be born with some deformity, such as the snout of a pig, or the white stripes of a zebra.

Art and decoration. Sculpture can hardly be said to be an art known to the Yao. The only piece of stone work I have ever seen was a granite boulder, on the surface of which cup-holes had been made for the game of *Bao* (Pl. IV, fig. 4).

Of late years, individuals here and there have begun carving wooden figures of men and animals. The Yao, of course, make no idols. It is uncertain exactly how long it is since any of these people started producing wooden figures. I should think that this art has sprung up within the past twelve or thirteen years, that is to say, since there has been a market for them among European residents. In the first place only natives and some of the common animals, the eland and leopard, were represented; since then, many animals and Europeans have been copied. The native is extraordinarily clever in reproducing characteristic features in dress, etc., so that a Portuguese is easily distinguished from an Englishman. The little models in ivory of animals and native household objects, made by the Swahili people on Lake Nyasa, have never been copied by the Yao. Neither do they make clay images of men and cattle as do the Zulu-descended Angoni and cattle-keeping Wankonde. No native would allow any wooden figure to remain in his house for fear of ill luck; the women especially would look askance at them, fearing some misfortune in their next pregnancy. Little wooden figures of birds, however, are sometimes seen affixed to the point of the hut roof.

The making of carved figures, then, is of recent introduction, or rather is a recent event in the evolution of the Yao, as they were not taught but self-inspired in the work.

The ability to make representations of objects by drawing appears in the same way to originate spontaneously here and there as a sport. Natives with a talent for drawing are found among all the tribes, and among the Yao, it is said, there have always been some who have been able to draw. Naturally enough, their reproductions are made on the walls of their houses, and their subjects are generally animals of the forest, sometimes men and houses, or some other object of particular interest[2] (Pl. VIII, fig. 1). I also give sketches of some other drawings I have noted (Pl. XVIII); the line figure of a man at Makanjila's

[1] Vide supra, p. 327.

[2] Cf. A. Werner, 'A Native Painting from Nyassland,' (Jour. Afric. Soc., London 1908, vol. 8, no. 30, p. 180-182).

3: Stannus D-5 (ca. 1912) 1922 FT7 Yao FT7

778
825
532

[361]

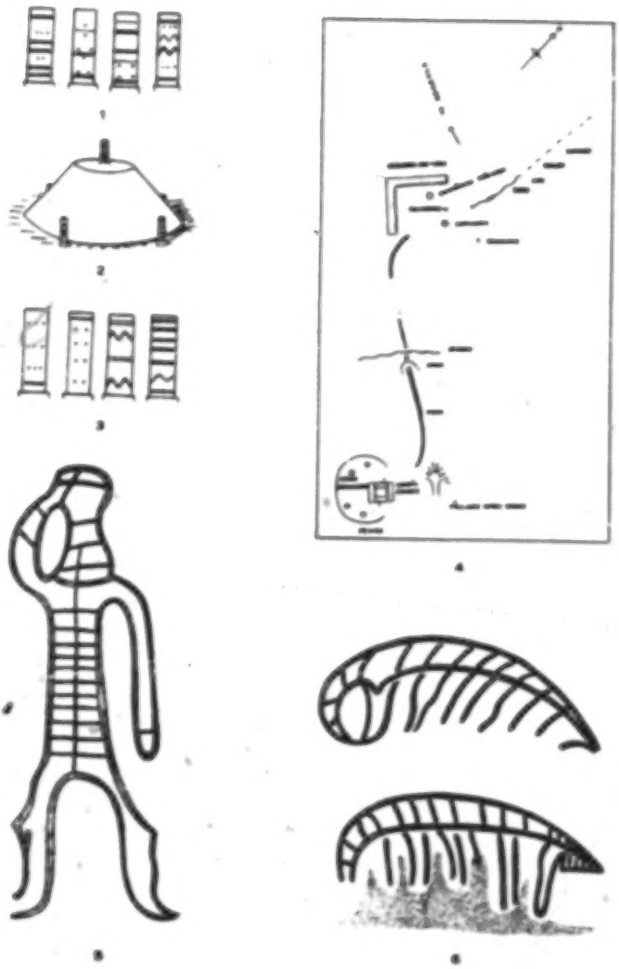

1-3, GROW FRAGMENTS; 4, UPPERMOST PORTS; 5, DIRECTIVE PLAN OF UPPERMOST; 5-6, STYLIZED FIGURES

[End Plate 10]

[Explanation of plates, cat. 116, p. 265]

3: Stannus D-5 (ca. 1912) 1922 FT7 Yao FT7

H. S. STANNUS—WAYAO PLATE XI

778
532
825

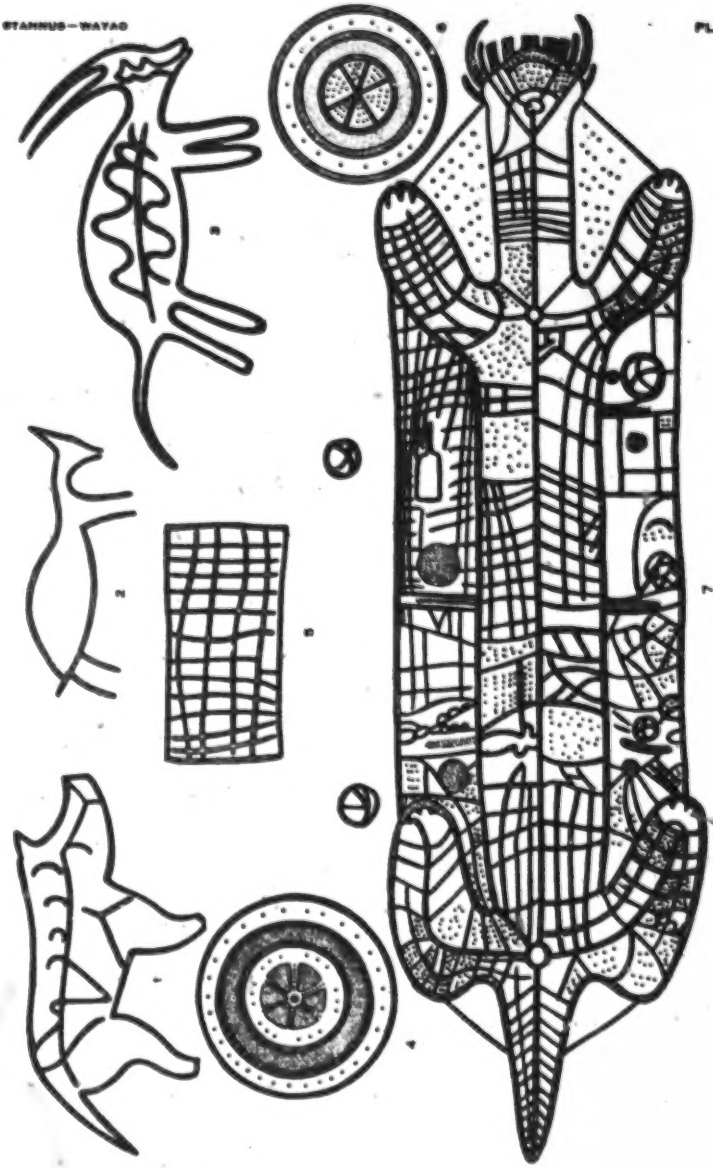

[End Plate 1L]

[For Plate Explanation, see cat. 116, p. 265]

3: Stannus D-5 (ca. 1912) 1922 FT7 Yao FT7

778
825
532

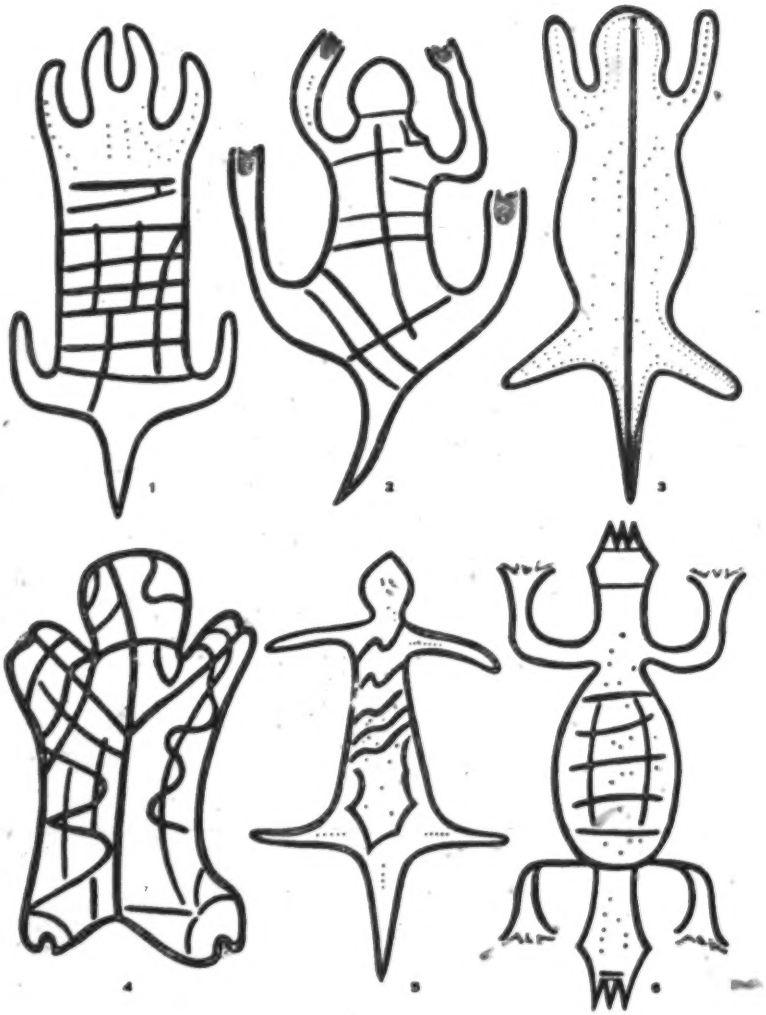

WAYAO FIGURES

[End Plate 12]
[For explanation, see cat. 116, p. 265]

3: Stannus D-5 (ca. 1912) 1922 FT7 Yao FT7

778
825
532

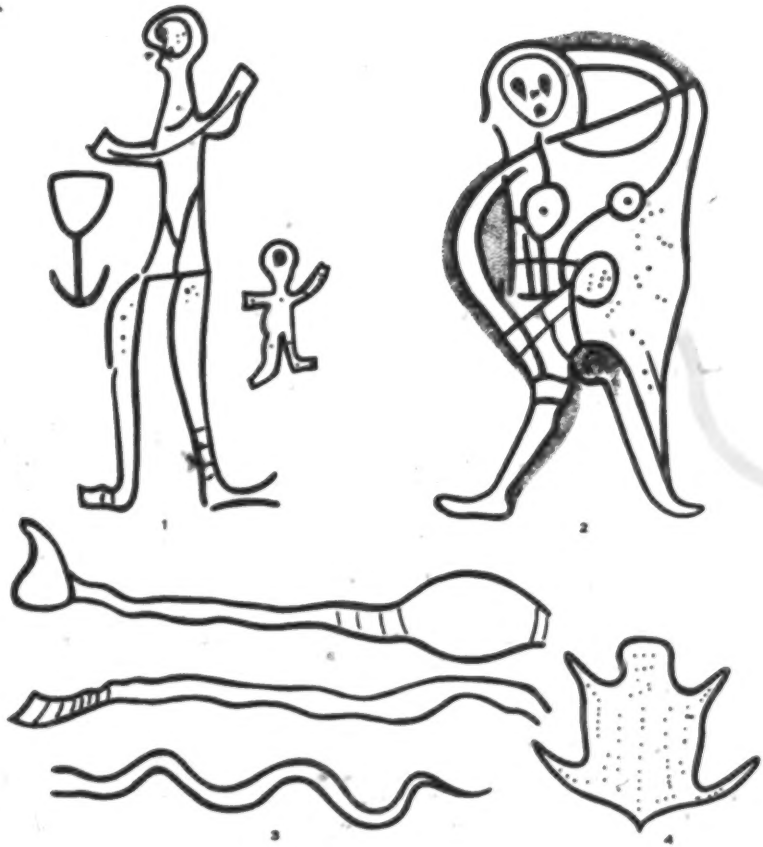

[End Plate 13]

[For explanation, see cat. 116, p. 265]

832 *Mpasi* is a love potion. Men are often anxious that women should ask them for love (*ku-pala*). A man seeing a woman whom he fancies, takes up some of the dust where she has trodden and mixing this with medicine puts it in his hair. If he meet her again, though he takes no notice of her, she will come to him.

789 When crops are harvested, a layer of the cereal is laid at the bottom of the corn-store,
241 and *uwbe*, which consists of medicines contained in the skull of or made from the body of a still-born infant, is then put in and the store filled. In this way, he who has only a small
● [826] garden may be sure that his grain will last a long time. Similar medicine is put in gardens with the first rains to insure heavy crops. A man on the approach of the planting season should never give away seed to anyone until his own seed is put in or it may bring bad luck to his crop. This is evidently a superstition arising from the fact that if he gives seed away, he may not have enough left to raise a crop sufficient to support his family. Some people are considered "lucky at planting pumpkins, other people when they plant, reap only watery pumpkins." A man, therefore, will often ask one of the lucky people to plant his pumpkins for him. My hospital boy always got the cook to plant his pumpkins.

789 A man wishing to become a person of importance, with a village of his own, takes a
824 medicine made from a certain tree and then builds his hut in a new place, hoping people will flock to him. The tree is known as *chukambili*. Another medicine, taken in the belief that people will flock to a man in consequence, is made from the bush called *utola*. Cf. *litule* planted at the threshold to attract visitors.

789 Conjuring. There are other performances akin to magic in the eyes of the natives,
791 which I have never had the opportunity of witnessing but which would appear to be of the nature of juggling or possibly hypnotism; some resemble the tricks of jugglers; others are more like some of the performances in India. I naturally supposed that they had been learned from men at the coast (Zanzibar), but I am assured that they belong to the Yao themselves.

Kambenje, a Yao of Chiradzulu, well-known at dances and *Unyago*, after some preliminary dancing, stands still and is covered by a cloth; when the cloth is again removed, he is discovered with a number of squealing puppies held in his loin cloth, which he then hands round. He begins to dance again and the persons to whom the puppies have been given watch him and then find they are holding excrement, not puppies. Or mud-fish are handed round and the people find they are holding women's diapers.

Another trick often performed by Kambenje was the burial of a man in the ground, covered up completely with earth; at the sounding of the drums the buried man comes running in from the back of the watching crowd.

Kasonga, a Yao of Malemya's, priest, and medicine man, after an *Unyago* ceremony used to put on his red blanket and walk over the hot embers of an enormous fire in the village open space. He admitted that he smeared himself with medicine and an eyewitness told me that when he put his feet on the hot logs, it caused a sizzling sound.

771 784 6. It is believed that signs of guilt are visible in the eye of a murderer; medicine is procured in the hope of getting rid of these signs.

7. The possession of the hair of another person is supposed to give the possessor power over that person, hence a medicine man, when the patient he has been treating is cured, shaves the patient and keeps the hair until payment is made.

[826] 8. A native with light greenish-grey eyes is not to be trusted. He is said to have eyes like a cat and is called *majerijeri;* these eyes are rare among natives.

9. It is unlucky for a child to get into a basket; he may be burned.

10. Should a woman turn the porridge pot upside down, every one who has eaten will become constipated. For the same reason, a woman, after turning out the porridge from the pot, just touches the top of the mass of porridge with the bottom of the pot.

11. A woman will never leave the pounding stick in the grain-mortar. Should she do so, the heavens would fall.

12. When a zebra is killed, a knot is tied in its tail so that eating of the meat shall not cause indigestion.

13. It is unlucky to sit upon a headrest, the *mawilo.* The person would surely be bitten by a snake.

[843] 14. If a man commits murder, and his wife is pregnant at the time, she must sleep on the spear used.

15. Children are told that they must not eat at night; that if they are hungry, they must lie quiet and try to go to sleep again. If they don't obey and sit up eating porridge, a long hairy arm will come through the fastened door and beg for some, the voice of the unseen saying:

[539]

> "*Nyao chimkuti'choni nuaya ni mjasa!*"
> "Give me that which you put to your nose to smell and throw away,"

the repeated movements of the hand to the mouth (nose) and back to the pot being supposed to make the "bogey" think that they are not really eating but merely smelling and throwing away the food.

16. A male should not scrape the porridge off the porridge stick; this is only allowed to the woman. Should a man do so, it is supposed that when he goes hunting, he will hit anything he shoots at, only in the tail.

17. There is a saying that the men and boys may eat little pieces of porridge which fall out of the pot, while cooking, on to the supporting stones and it will give them power to escape unhurt from battle. The fragments are called *ngulupuko,* (from *ku-lupuka* "to escape").

18. Children are instructed to take their food sitting down instead of being in a hurry and standing to take it. They are told that if they do not obey, their porridge will not go into their stomachs but into their legs and swell out their knee-joints.

 771 784 826 539

48. A child, when one of its milk teeth drops out, stands some five yards away facing the door of the hut and throws the tooth over the roof of the hut, saying:

"Al kitumpulu lino lyanu alyo, mbani lyangu lyambone 'lya!"
"Oh! crow tooth your there is, give me my of good one!"

Religion. The matter of the religious beliefs professed by natives of East Central Africa is one beset with many difficulties to the student of today. It has been the subject of many essays by workers in the missionary field, but the wide contact of the natives of Nyasaland with missionary effort during the past thirty years has done much to confuse the problem, and one feels that many missionaries in their writings rather color the picture with their own feelings. 771

I think probably the Yao with whom I am now concerned have a truer conception of their own beliefs than many of the subject tribes among whom mission teaching has more easily taken root. The religious beliefs of a people are to a large extent the reflection of the circumstances under which that people lives. The outstanding event to all natives is death. At death, something is lost to the body, without which life is impossible. This is the *maimu* which may be translated "soul" or "spirit." The *maimu* is said to leave the body of the dying man when he becomes moribund or unconscious. It appears that this same *maimu* may leave the body during unconscious states unassociated with death, as when a man faints, in epilepsy, and during sleep. 771 761 774

Apart from this evidence of the dissociation of the *maimu* from the living body, the Yao believe that a man's shadow is an objective manifestation of the soul and they will say "the shadow is the *maimu*." Fear is experienced if a man jumps on the shadow of his fellow. Light is also thrown on the constitution of the *maimu* by the belief in a certain evil-spirit which dwells in deep pools. It is called *chimala-mezi*, which means "one who may finish (drink up) all the water." The superstition regarding this evil spirit is that it can suck the blood from your shadow as you stand at the edge of the pool, till you become so weak that you fall in and are drowned. 774 774 776

After leaving the body at death, the *maimu* goes to take up its place in the spirit-world, occupying a position corresponding to that held by the man during his life. With a truly materialistic conception, the soul is supposed to have all the attributes of the dead man, to be wealthy in proportion as the man was so on earth, and its relative position will be identical with that which he held among the living. The tribal chief becomes a paramount chief in the spirit world, the lesser chief holds sway in his lesser capacity, etc. We shall see that in intercession, when the tribe is threatened with calamities, it is the late paramount chief who is appealed to for help, and when one feudal chief is at war with another, the chief's dead predecessor will be called upon for aid. When a village is moved, it is from the spirit of the dead headman of the village that success in the enterprise is sought. Similarly, in family trouble, some dead ancestor is entreated to set things right, while a native 775

3: Stannus D-5 (ca. 1912) 1922 FT7 Yao FT7

(fig. 14), and an antelope from Mpona's in Zomba district (fig. 11), also two birds at Pikani's which I should think represent a fowl and a crow (figs. 12, 13). It is interesting to compare these attempts which show a natural feeling for shape, with others, the work of an Angoni youth in touch with a European mission station, who depicts the missionary, his donkey, his dog, and a chair but with little or no sense of form. Note the dots above the animals' backs which represent their feet seen from the other side (Pl. XVIII, figs. 15–18). 532

The models of animals and other objects made in relief on the ground at *Lupanda*, and of animals in grass and bamboo at *Chiputu*, are referred to under *Initiation Ceremonies*.

Decoration is limited to the making of patterns of geometric design on many household articles. The graving of pots is mentioned under *Pottery:* gourd vessels sometimes have lines and triangles cut on the surface; ivory knife handles may have concentric circles graven on them, the same being true of ivory nose-rings and necklaces. Spear handles and walking sticks, snuff-boxes, pipes, the head-rest and the necks of musical instruments too, are commonly engraved with designs. The wooden rim of the *situngwi* basket is always so treated. A series of these designs from baskets is reproduced (Pl. XVII). Occasionally geometric patterns are painted on the walls of huts. The best example I have seen is shown in the photograph which represents a Mohammedan mosque in South Nyasa district. This, I think, gives the key to the origin of these geometric patterns, namely, Swahili influence among the Yao (Pl. IV, fig. 1). 531

Personal ornamentation. The skin color admired most among the Yao is a rich brown and is likened to the color of the milliped, *lijongolo*. A very black skin is not liked and a man is said to be "as black as a crow." Very light colored skins are equally distasteful to some and considered to resemble the color of a roasted crab. The hair should be jet black. Young men anoint their heads with a decoction of *namalenga* pods in boiling oil to make the hair black and lustrous. When the hair is turning white, a substance made of the charred roots of a plant called *chisinje* is put on to make it black. 832 826 302

Natives recognise that some among them have red hairs on their heads or in their beards, and such a man is called *matuana*, *matuana* being the name of a caterpillar which lives on the *situana* tree and is covered with long red hairs. 832 826

The old men used to wear wigs, *chisindi*, made of knotted string blackened and oiled to look like hair; the women wore one called *chikuna*. These were used to disguise greyness or baldness.

The women sometimes let the hair grow long and then thread beads on wisps of it. This fashion is called *chitunga*. The large red bead, *chitalaka*, is now used for the purpose. This fashion was adopted by the old women and those in charge of the *Chiputu* ceremony. Strings of beads threaded on the hair falling down round the head are called *lilombola* or *malombola* (plur.). Women sometimes thread beads on the crest of hair called *nchacha*. Ordinarily the hair is periodically shaved or sometimes cut with a knife, but the process is painful and therefore unpopular.

4: Stahnus D-5 (ca. 1909)1910 FT7 Yao FT7
Maravi FR4

M 832 this is then added to a brew of new beer and given to her husband to drink. He will then think of and love only herself. This is said to have caused the death of some husbands.

Mpasi: medicine made and drunk by a woman to make her beloved by a certain man.

M 837 844 [847] At confinement a woman has to answer whether she has ever committed adultery; if she denies an adultery she may die, if she owns up and gives the name of the man this can be remedied. Adultery on the part of the father or mother is said to be a cause of abortion.

M 837 A man going away from his village for several months and leaving his wife behind and wishing her to remain faithful puts a knife into its sheath and hangs it in the hut, telling his brother. It is then believed that should anyone commit adultery with his wife separation after the coitus is impossible till some third party comes and pulls the knife from its sheath, and in doing so becomes a witness of the adultery.

M 833 M [262] [825] [522] Eating of eggs is believed to cause impotence in children or adults. Much fat eaten is said to have the same effect. It is believed that if a hare run up against the leg of a man while going through the forest he will become impotent. It is for this reason that dung of the hare is put at the door of a man to make fun of him as impotent. This is a trick played by *Adzukulu.*

M Y 837 263 759 If a woman who has committed adultery puts salt into the food while cooking, of which her husband will partake, will thereby cause his death. At the present time among the Yao-Mañanja community a woman always calls one of the children to do it—this speaks for itself. A woman, after connection with her husband, putting salt in food, may cause illness among any children partaking of the food.

M 837 If a man accuse his wife of adultery and she denies it, he will procure medicine and place it under her pillow, then in the middle of the night she will wake her husband and tell him the name of her lover.

M 787 777 *Mpingu* = ill omen. A journey would always be stopped if on setting out one of the party die; or should they meet an ant-eater or black snake. It used to be considered a sign of bad luck if one of them knocked the toes against a stone; now if blood flows from the big toe they say it presages good luck.

Y 832 ● 826 The Yao at the age of sixteen years climbs the *mtumbu* tree, and finding a fruit which is soft makes a hole in the middle and inserts the penis. After this procedure the penis is said to enlarge as the fruit grows; when the size desired is reached the fruit is cut down.

M 827 The native says that every one has a small animal inside the ear, the sounds it makes causes the man to hear. If the animal escapes the man becomes deaf. The animal is said to be ½-inch long, and wax is said to be its excrement.

M 484 777 Where a man rests on a journey he often puts a stone in the fork of the nearest tree; on many journeys there are regular halting places, often at cross roads, and here every passer-by adds a stone for luck, making quite big heaps.

4: Stannus D-5 (ca. 1909) 1910 FT7 Yao FT7
Marovi FR4

The prepuce in the case of men is sometimes the seat of a small circular hole originally copied from the coast Swahili whose tribal mark it was, and who did it to prevent enlargement of the scrotum.[1] A small perforation of the lobule is commonly seen among the Chipeta-Angoni. These perforations are now, however, seen indiscriminately among various tribes in the country. The former I have seen in a Nyasa—it is also general among the troupes of professional dancing-boys, who wear a cord or a small stick through the ear, usually the right ear. The stick I have seen among Asenga, Nyasa, Machinga, and Achewa. No definite earrings are worn. The habit of wearing three or four discs in the margin of the ear is only seen among coast women (Zanzibar) who have come to live in the country (Fig. 5).

M 304 [177] [171] Y [304]

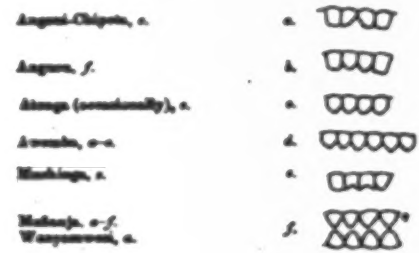

FIG. 4.

FIG. 5.

Dental mutilation was, and is to some extent, still of tribal significance, though mostly performed for appearance (*Fig.* 4). Actual extraction is but very seldom seen now.

A prominent breast is admired among the natives, and to secure this a cord is tied round the chest by girls, at the upper margin of the gland, with the idea of making it project. I am inclined to think it has the opposite effect. No attempts are made to elongate the breasts, they become very pendulous without any artificial aid. [824]

Amputation of fingers and ears, castration, etc., have in the past only been practised as punishment. M [681]

Young girls by constant pulling on the *labia minora* and enclosed clitoris try to cause elongation, as such is said to be admired. [832]

Elsewhere I have referred to the penis of natives, which I consider to be characteristic in its hardness. This is said to be caused by the "young man" purposely injuring the organ by beating it so that it never returns to normal softness when not erected. M [856]

Cicatrization.—Cicatrization is practised by both sexes of all the tribes. In former times the designs had a certain significance, such as to indicate the tribe, to signify that the wearer had been initiated, to commemorate certain events, and so

[1] This is interesting, inasmuch as the ears are pierced in England, commonly with the belief that it prevents bad eyesight.

3: Stannus D-5 (ca. 1912) 1922 FT7 Yao FT7

As an example of another kind of intermediary may be mentioned a woman called Bimbi Chikasowa, who, though an Anyanja, was well known among the Yao of Zomba. She was consulted on many occasions about the future, about rain, or the prevention of disease. She was a woman of quiet ways and greatly respected; she had no fixed abode but was received everywhere and given food and shelter. She would sometimes disappear from the district and travel to far distant places. A son, born to her when a young woman, was lately a patient under my care, a man of about forty-eight. On one occasion she was consulted about an epidemic of ulcers among the people near Zomba. She asked all the people from the villages to go down to Lake Shirwa and to take a white fowl with them. When they had all collected, she appeared, carrying in each hand a little gourd containing *mbepesi* flour, and a small open basket on her head. She took the fowl in one hand and then proceeded to walk into the water, saying she would have to go to a little hill on an island in the lake called *Chidia Mpiri* and that she would come back in three days. She then walked on into the water and disappeared below its surface. In three days time, she returned to the village and said that the women must give up dancing the *chiponda* dance for twelve months and all would be well. 791 789 755

On other occasions she usually worked along similar lines. Consulted as to whether or not some sick person would recover, she always answered with the same formula, if she thought he would die, "The house is prepared for him and medicine would avail nothing!"

There are certain other supernatural persons or spirits to which reference must be made. *Chimala-mesi* has been mentioned above. *Manunu*, a word which Hetherwick translates as "madness, idiocy,"[1] really refers to the delusions and hallucinations which form part of the perceptions of the insane. The word also has the meaning of obsession, phobia, and intuition; thus the natives say of an ox about to be slaughtered that shows signs of realizing the approaching evil, "it has *manunu*." On the other hand, they say the hartebeest is a foolish animal that does not know what to do when hunted: "it has *manunu*, it is a deluded animal." Again, the baboon and the crow "have *manunu*"; they are possessed of senses or faculties which warn them of the approach of any enemies before they can be seen or heard; they cannot be stalked. In all these cases, the crowd of hallucinatory men pursuing some melancholic, the rats of the delirium tremens patient, and that which appears to warn the crow or the baboon, are all *manunu* and are, I think, supposed by the natives to have some kind of materialistic form. 791 828

Ndodoche: when the *wasawi*[2] do not wish immediately to devour the body of a deceased person which they have raised from the grave, they cut off the arms and legs at the elbows and knees and insert medicine into the stumps; these living-dead are then compelled by the *wasawi* to live in caves and hollow ant hills during the day and to follow them at night in their travels, "like a herd of goats," to be eaten as required. The *ndondoche* may be heard as they wander along in the night, making sounds like a cat's mew. A woman will 791 789

[1] Yao language, op. cit., p. 220. [2] Vide supra, p. 292.

7: Hetherwick M-5 (ca. 1900) 1902 FT7 Yao FT7

774 they said, "was about to take away their shadows and they would die." In their
123 mind the *liseku* was allied to the *chiwilili* or picture, and the removal of it to the photographic plate would mean the disease or death of the shadeless body.

As an instance of their faith in the close relationship of the *liseku* and the
123 picture or shadow, I may relate the following incident. An influential Yao chief
753 on Mount Zomba with whom I was on terms of intimate friendship for years,
refused to allow himself to be photographed, fearing the consequences on his life.
774 At last I was able to persuade him to give me a sitting, but on the sole condition that the picture was to be shown to none of his subjects but to be sent out of the country as soon as possible. He feared lest some ill-wisher might use it as a means towards his bewitchment. Some months afterwards the chief became seriously ill, and in the minds of his attendants his illness was attributed to some accident having befallen the photographic plate on which they believed the picture of their chief to be imprinted. If that negative had been broken in England, whither it had been sent, their chief's illness would be accounted for. Accordingly they appealed to the divining oracle, who, however, after consulting the "lots," assured them that the picture was intact, and that in consequence the disease must be ascribed to some other cause.

774 The *liseku* or soul is recognized as the chief agency in dreams. To dream is,
in the Yao tongue, *kwangamila maseku*, where *maseku* is the plural form of *liseku*.
787 The *liseku* is supposed to go out and visit the scenes and persons it dreams about, and in turn is visited by the *maseku* of others, dead or living. Pains in the body on rising from sleep in the morning are usually attributed to such nocturnal visits,
[753] while disease or pains of a severe type are ascribed to castigations by the whips of the *maseku* or more frequently of the witches who prowl around during the night watches.

794 Madness, idiocy and the ravings of delirium or disease are accounted for by a
similar agency. The sufferers are *wa maseku*, they of the spirits, and a sudden fit
838 of epilepsy or insanity is described as *gakamwile maseku*, the spirits have seized him. Such persons are usually regarded with awe, as living in close contact with the unseen, but no incantations or enchantments are ever used to expel the spirit in possession. Some native doctors are credited with a knowledge of certain
[755] medicines which they say are effectual in such cases, but their application in no way differs from those employed in treating ordinary types of disease. Idiots and the insane are allowed to wander at will about the village, and only when violent symptoms show themselves as a danger to the community is any physical restraint put upon them.

754 The *maseku* are also recognized as the inspiring agencies in the ravings of the witch detective. This person, usually a woman, is called in to discover who is the guilty agent in cases of mysterious deaths or outbreak of an epidemic at a village. She arrives on the scene and takes up her abode for a few days previous to her actual demonstration. She mixes with the people, learns all the scandal and gossip of the community, and at night prowls about the houses searching for

7: Hetherwick M-5 (ca. 1900) 1902 FT7 Yao FT7

evidence. On the appointed day she dances, *kwpina masalu*, to dance the spirits, or *kwawesa*, to rave or prophecy, and in the ravings of the dance she calls out the name of some party who is afterwards accused of being the *mawi* or witch. Followed by a crowd of excited spectators she dances through the village spear in hand, stopping here and there to dig up charms or medicines which the supposed witch has buried in the ground as the instruments of his occult practices. It is only in cases of supposed special difficulty, or when the magnitude of the supposed crimes demands that special measures be adopted for their detection, that the services of such a witch detective are called in. In ordinary cases these appeals are made to the divining oracle who consults his "lota" as a means of discovering crimes of this nature.

Among the Yaos the human being is believed to be the sole possessor of a *liaolu*. I have been unable to discover any trace of a theory that the *liaolu* may pass into any animal or inanimate object and thus confer upon it the nature or power of a fetish. Such belief is cherished among the Angoni and Achewa tribes to the westward by Nyasa and the upper Shire River, and the intelligent Yao is aware of this, but he states that among his people no such belief exists. Even charms which have the effect of healing or warding off disease, or of protecting the wearer from war or wild beasts or other danger by land or water, are supposed to possess this power without any idea of their being possessed by a *liaolu* or other spirit influence. The nearest approach to such a theory is in the case of certain powerful "doctors" who have obtained special medicine by means of which, at death, they can transform themselves into lions, leopards, crocodiles, etc. Lepers also are sometimes supposed to become hippopotami. But both of these cases must be regarded rather as transmutations of body than transmigrations of soul.

It will be thus seen that the nature of the human *liaolu* is closely allied to that of the *masalu*, which are the inspiring agents in madness and in the ecstasy of prophecy or incantation. What the origin of these inspiring *masalu* is, or to whom they belonged when in bodily life, the Yao holds no theory. He is content to accept them as they are, *masalu ipoyo*, "Just *masalu* and nothing more," as he says.

It is, however, when we follow the disembodied *liaolu* after death and consider its position and power in the other world that we find ourselves in a region of higher spiritual activities.

In dreams or in fainting fits the *liaolu* leaves the body but only to return to it with the awakening consciousness. At death, however, it leaves its earthly abode never to return. It is now spoken of as having gone to *mulungu* or *milungu*. This word, which lies at the basis of all Yao theories of the place of the soul after death, will be dealt with later on as regards its derivation and connections in the Bantu family of languages. In its actual use it bears two significations.

I. The word *mulungu* is in the first instance applied to the human soul or *liaolu* after death when it is considered as an inhabitant of the spirit world. Even in life a man, when he meets with any piece of good luck, will be heard to say, "It's my *mulungu*," as if his soul had an influence in determining the character of his

2: Mitchell E-5 (1946-1949) 1956 FT7 Yao FT7

came to the village and in accommodating strangers while he was away. He told them that disputes were to be referred to the headman immediately. Turning to the new headman he said he had to report anything unusual that occurred in the village, and that he was authorized to arbitrate in small cases in his and surrounding villages. 622 537

Kawinga then left the centre of the crowd and went back to where he had been sitting. Then an officiating headman, addressing particularly the women, said, 'Only a few months ago there was a quarrel between the present chief and his elder sisters. These women ran away to Malemia's area in Zomba district without reporting the matter to anyone. This must stop. With effect from to-day any troubles must be brought to the headman without delay: he will settle them. A tree cannot grow without branches and a headman or a chief cannot be known without his people's respect. Do not behave as children. This man cannot do things alone: he must have your help. We leave him in your hands and we do not want to hear about any more trouble. Follow all the instructions the chief has given you.' He took his leave and Nyenje was taken back inside the hut. The people now dispersed to where there was beer and dancing.

The Structural Reincarnation of Village Headmen and Perpetual Relationships

There appear to be a number of significant aspects of the installation ceremonies. First, there is the ritual death and rebirth of the village headman. The heir is 'killed' by a blow with the fist on the forehead, but is reborn the headman. The Yao do not believe that the spirit of the headman is inherited by the heir;[1] he has only eaten the name.[2] But socially he is born again and, logically consistent with this idea, he takes the wives of his predecessor without further marriage negotiation. He also takes over the property of the dead man, his clothes and his huts. 622 829 [587 428]

But this structural reincarnation of the headman has the important implication that the headman is immortal. He shares this characteristic with the group of which he is the leader. When 622 829 601

[1] As the Bemba do. A. I. Richards, 'Mother-right among the Central Bantu' in E. E. Evans-Pritchard and others, *Essays Presented to C. G. Seligman*, Kegan Paul (London, 1933).

[2] *Kulya lina* is a synonym for succeeding to headmanship.

2: Mitchell E-5 (1946-1949) 1956 FT7 Yao FT7

622
●829
601

a village dies, so then does the headman die.[1] In his rebirth, he occupies the status that his predecessor held before he died, in both the kinship system and the political structure.[2] His mother's brother's children whom he formerly called 'cross-cousin' he now calls 'my children'. His mother's younger brothers whom he previously called *akwelume* (mother's brothers), he now calls 'my younger brothers' (*apwanga*), and so on. By the extension of this principle, an heir succeeds not only to the status of his mother's brother but also to that of the first of his name. Cigwaja VI, for example, calls the descendants of his mother's mother's mother's brother (Cigwaja IV) 'children'. In fact, he calls the children of any Cigwaja 'my children'.

Within the political field the same principle is used in establishing what we may call 'perpetual relationships'.[3] There are some village headmen who express their relationships to each other or to the chief by a kinship term. The headman Majaja, for example, is the 'son' of Nyambi. In fact, the first Majaja to establish a village was the son of the second Nyambi. The present Majaja is the third incumbent and three Nyambis have died since Nyambi II. Nevertheless, by positional succession both of the present incumbents are translated to the formative phase in their relationships, which is thus perpetuated to-day, and will be, in their view, for ever. The present Liwonde calls Kawinga 'elder brother'. Kawinga is in fact his mother's mother's mother's sister's son. The first Liwonde was the first Kawinga's younger brother. They invaded Nyasaland together. At this significant point in their history their relationship became fixed and then perpetuated in the political structure. This relationship, though phrased in a kinship term and moulded to some extent by the norms of kinship behaviour appropriate to the term used, is in reality political, for it fixes the relative positions of two villages through their headmen.

[1] Sometimes after a village has broken up and the name has not been heard of for some years, some survivor revives it and resuscitates the village.

[2] Dr. Richards calls this 'positional succession'. See 'Some Types of Family Structure amongst the Central Bantu' in A. R. Radcliffe-Brown and Daryll Forde (eds.), *African Systems of Kinship and Marriage*, Oxford University Press for the International African Institute (London, 1950), 224.

[3] This term was suggested by Dr. I. Cunnison's use of it for a similar practice among the peoples of the Luapula Valley. See his *Local Organization on the Luapula Valley*.

3: Stannus D-5 (ca. 1912) 1922 FT7 Yao FT7

code of morals is imparted which is far reaching for the social welfare. Macdonald makes the statement that "when a girl is initiated, she must find some man to be with her on her return; otherwise she will die."[1] Speaking with reserve as to what happened among the Amangoche around Blantyre Mission thirty years ago, I believe that no such practice is or was part of the Machinga Yao ceremonies. I have heard similar stories from other Europeans but I am inclined to discredit the whole idea as a practice among any section of Yao. Of the Anyanja, I cannot speak with the same conviction. Similarly I believe that the practice of artificial dilatation of the vagina is foreign to the Yao though possibly introduced in some places from the Swahili. 881 177 832

At *Lupanda* and *Chiputu*, the youth have to undergo a good deal of hardship which is all for their benefit, but year by year, as civilization progresses, greater numbers forego these ceremonies. Their manners and morals suffer in consequence, and one is forced to acknowledge with the "old people" that the younger generation, decked in European clothes, with an air of smug self-conceit, no longer shows that decorum and self-respect which characterise the older, unsophisticated natives. My experience with regard to the attitude of natives to their initiation ceremonies differs from those related in *Africana* and I am afraid that Macdonald's native friends[2] were laughing at the inquisitiveness of the white man and not at their own experience. 881 177

In the *Journal of the Royal Anthropological Institute* for 1913,[3] Dr. Davey and I gave a short account of part of the ceremony at *Lupanda*. Since then, through the friendliness of some of the chiefs in Zomba district, I have been present at several more ceremonies. I have collected a number of fresh observations and made a complete set of sketches of the *isyaqo* or images in relief made on the ground at one of these ceremonies. I have also a complete account of the boys' ceremonies from a celebrated master of ceremonies or *m'wichila* as he is called, named Mlemala (Kumpika) of Che-chamba, in his own words, with his own songs. In writing down the songs, I have simply recorded the words, without giving the many full and partial repeats, and I have never attempted to score down the airs to which they are sung. 881 124

In the account given below I shall follow Mlemala's practice, giving such variations as I myself have observed. It will be understood that each *m'wichila* has his own way of doing things so that there may be many variations in detail.

Lupanda: Every year, a certain number of boys in a group of villages reach the age at which the ceremony is commonly performed. In response to requests made by the village headmen, the chief appoints a date on which the *usyaqo* shall be held; this is usually towards the end of the dry season (September) but before the long grass of the bush has been burnt, as this affords the necessary privacy to those taking part. 881

[1] Op. cit., vol. 2, p. 136. [2] Ibid., p. 130.

[3] H. S. Stannus and J. B. Davey, 'The initiation ceremony for boys among the Yao of Nyasaland', (Jour. Anth. Inst., London, 1913, vol. 43, p. 119-122).

3:Stanaus D-5 (ca. 1912) 1922 FT7 Yao FT7

832 *Mpasi* is a love potion. Men are often anxious that women should ask them for love (*ku-pala*). A man seeing a woman whom he fancies, takes up some of the dust where she has trodden and mixing this with medicine puts it in his hair. If he meet her again, though he takes no notice of her, she will come to him.

789 When crops are harvested, a layer of the cereal is laid at the bottom of the corn-store,
241 and *umbe*, which consists of medicines contained in the skull of or made from the body of
[826] a still-born infant, is then put in and the store filled. In this way, he who has only a small garden may be sure that his grain will last a long time. Similar medicine is put in gardens with the first rains to insure heavy crops. A man on the approach of the planting season should never give away seed to anyone until his own seed is put in or it may bring bad luck to his crop. This is evidently a superstition arising from the fact that if he gives seed away, he may not have enough left to raise a crop sufficient to support his family. Some people are considered "lucky at planting pumpkins, other people when they plant, reap only watery pumpkins." A man, therefore, will often ask one of the lucky people to plant his pumpkins for him. My hospital boy always got the cook to plant his pumpkins.

789 A man wishing to become a person of importance, with a village of his own, takes a
824 medicine made from a certain tree and then builds his hut in a new place, hoping people will flock to him. The tree is known as *chulumbili*. Another medicine, taken in the belief that people will flock to a man in consequence, is made from the bush called *mtola*. Cf. *litula* planted at the threshold to attract visitors.

789 **Conjuring.** There are other performances akin to magic in the eyes of the natives,
791 which I have never had the opportunity of witnessing but which would appear to be of the nature of juggling or possibly hypnotism; some resemble the tricks of jugglers; others are more like some of the performances in India. I naturally supposed that they had been learned from men at the coast (Zanzibar), but I am assured that they belong to the Yao themselves.

Kambenje, a Yao of Chiradzulu, well-known at dances and *Unyago*, after some preliminary dancing, stands still and is covered by a cloth; when the cloth is again removed, he is discovered with a number of squealing puppies held in his loin cloth, which he then hands round. He begins to dance again and the persons to whom the puppies have been given watch him and then find they are holding excrement, not puppies. Or mud-fish are handed round and the people find they are holding women's diapers.

Another trick often performed by Kambenje was the burial of a man in the ground, covered up completely with earth; at the sounding of the drums the buried man comes running in from the back of the watching crowd.

Kasonga, a Yao of Malemya's, priest, and medicine man, after an *Unyago* ceremony used to put on his red blanket and walk over the hot embers of an enormous fire in the village open space. He admitted that he smeared himself with medicine and an eyewitness told me that when he put his feet on the hot logs, it caused a sizzling sound.

3: Stannus D-5 (ca. 1912) 1922 FT7 Yao FT7

(fig. 14), and an antelope from Mposa's in Zomba district (fig. 11), also two birds at Pikani's which I should think represent a fowl and a crow (figs. 12, 13). It is interesting to compare these attempts which show a natural feeling for shape, with others, the work of an Angoni youth in touch with a European mission station, who depicts the missionary, his donkey, his dog, and a chair but with little or no sense of form. Note the dots above the animals' backs which represent their feet seen from the other side (Pl. XVIII, figs. 15–18). 532

The models of animals and other objects made in relief on the ground at *Lupanda*, and of animals in grass and bamboo at *Chiputu*, are referred to under *Initiation Ceremonies*.

Decoration is limited to the making of patterns of geometric design on many household articles. The graving of pots is mentioned under *Pottery:* gourd vessels sometimes have lines and triangles cut on the surface; ivory knife handles may have concentric circles graven on them, the same being true of ivory nose-rings and necklaces. Spear handles and walking sticks, snuff-boxes, pipes, the head-rest and the necks of musical instruments too, are commonly engraved with designs. The wooden rim of the *mtungwi* basket is always so treated. A series of these designs from baskets is reproduced (Pl. XVII). Occasionally geometric patterns are painted on the walls of huts. The best example I have seen is shown in the photograph which represents a Mohammedan mosque in South Nyasa district. This, I think, gives the key to the origin of these geometric patterns, namely, Swahili influence among the Yao (Pl. IV, fig. 1). 531

Personal ornamentation. The skin color admired most among the Yao is a rich brown and is likened to the color of the milliped, *lijongolo*. A very black skin is not liked and a man is said to be "as black as a crow." Very light colored skins are equally distasteful to some and considered to resemble the color of a roasted crab. The hair should be jet black. Young men anoint their heads with a decoction of *namalenga* pods in boiling oil to make the hair black and lustrous. When the hair is turning white, a substance made of the charred roots of a plant called *chisinje* is put on to make it black. 832 826 302

Natives recognise that some among them have red hairs on their heads or in their beards, and such a man is called *matwana*, *matwana* being the name of a caterpillar which lives on the *mtwana* tree and is covered with long red hairs. 832 826

The old men used to wear wigs, *chisindi*, made of knotted string blackened and oiled to look like hair; the women wore one called *chikwao*. These were used to disguise greyness or baldness.

The women sometimes let the hair grow long and then thread beads on wisps of it. This fashion is called *chitunga*. The large red bead, *chitalaka*, is now used for the purpose. This fashion was adopted by the old women and those in charge of the *Chiputu* ceremony. Strings of beads threaded on the hair falling down round the head are called *lilombola* or *malombola* (plur.). Women sometimes thread beads on the crest of hair called *nchacha*. Ordinarily the hair is periodically shaved or sometimes cut with a knife, but the process is painful and therefore unpopular.

302 Shaving is a rite practised in mourning.[1] Some old men and women, especially medicine men, make a practice of never cutting the hair and never washing it (Pl. VII, fig. 3). One [158] occasionally sees lunatics with very long hair in the villages.

The Yao do not follow the Angoni practice of tying up into tags the hair which has been allowed to grow long with palm leaf string, but they sometimes tie up a single wisp and make it up with medicine; this is called *kuhcoshi* or *njoshi* (plur.).

The scalp may be shaved in various fashions. Among men, it is quite common to trim the hair on the forehead, *ku-ejihile;* they must not, however, trim the hair behind (Pl. XVIII, fig. 2). Women, on the contrary, trim both in front and back; a man doing so would be laughed at. A woman for the ceremony of *Litiwe* shaves the front hair a little higher still, but she must be careful not to do so at other times, otherwise she would make herself a laughing stock (Pl. XVIII, fig. 10). The hair is sometimes shaved on either side of the midline in front, in imitation of temporal baldness; both baldness and this method of shaving are called *mawewe* (Pl. XVIII, fig. 4). Or again, among old Yao men the crown is shaved; this and natural baldness are called *hulasi* (Pl. XVIII, fig. 5). It is a fashion much affected by old men and great annoyance is caused them by any young upstart who does the same. Other methods include for men *mpita*, "a rat's path," an antero-posterior median line shaved (Pl. XVIII, fig. 9); *ingolongondinje*, two shaved lines made from back to front on either side of the head (Pl. XVIII, fig. 3); for men and women, *ligundaliwile*, "the garden is (dead) overgrown", one lateral half of the head shaved (Pl. XVIII, fig. 7); for men, *nchacha* a crest of hair left along the mid-line, both sides of the head being shaved (Pl. XVIII, fig. 8); *mwesi* (*chilemba cha mwesi*), "the moon," a crescent shaped area shaved on one or both sides of the head (Pl. XVIII, fig. 6).

The eyebrows and eyelashes are always left to grow normally among the Yao.

The Yao man used to take great pride in his beard; it was the object of a good deal of washing and combing. It grew to considerable length and was not cut or trimmed, but the hair growing down low over the throat was shaved, as was also the hair immediately below the mouth on the under lip and the moustache, as it was thought to get in the way when drinking. The whiskers were allowed to grow like the beard.

[832] Hair on the chin or upper lip of a woman is rarely seen and on account of its rarity is [435] much prized. Such hairs have a monetary value for making medicines, a single hair being sold for eight yards of calico or two shillings. Body hair is considered to be a sign of strength; on the chest, it is known as *changalama* (*ku-changalama*, to be strong). Body hair including hair on the back is by no means as rare as has been supposed. Sir H. H. Johnston [114] says that he has never seen it,[2] a statement which shows lack of observation. The hair on the forearms and thighs is called *cheuje* or *chembembe;* Hetherwick translates this word,[3] I think wrongly, as hair on the body. Body hair is never removed in any way. A man named Katumbisi ("the little vulture") of Ulumba had a very large amount of body hair; he was likened to a baboon and was a source of much interest to the children who saw him.

[1] Vide supra, p. 264. [2] British Central Africa, op. cit., p. 398. [3] Op. cit., p. 111.

3: Stannus D-5 (ca. 1912) 1922 FT7 Yao FT7

The hair of the axilla is always removed in men and women, usually by shaving but sometimes in the case of women it is dealt with as in the case of the pubic hair. A man with unshaven axillae would be laughed at and referred to as "a man carrying a fowl in his armpit." The axillary hairs are called *mandenga ga mungwapa* (*ngwapa*, the armpit). 302

The pubic hair, *mandenga*, is removed by both men and women; in men by shaving, in women sometimes by shaving, but preferably by plucking out after the application of a medicine called *mesamandenga* (*ku-mesa*, to pluck a fowl), which renders the operation easy. It is prepared from the juice which exudes from the bruised bark of the *mesa-mandenga* tree. There is a woman at Malemya's who has never grown any axillary or pubic hair; she is called "the rogue elephant"; a rogue elephant has no tusks. It may be noted in passing that the woman has borne children. [824]

A few men have the hair round the anus shaved. Such a service can only be asked of a man's closest intimate, such as a brother-in-law. [607]

I have dealt with tattooing among the Yao in an article, as yet unpublished, on tattooing among the natives of Nyasaland.

The teeth among the Yao proper are never mutilated in any way, though the Amangoche go in for small file marks at the cutting edges of the incisors. 304

The old Yao women, of whom some may still be seen, used to pierce the upper lip and wear a circular disc of wood often two inches in diameter in the hole; this is called *lupelele* (Pl. VII, fig. 4). The disc was often made of lead and sometimes of ivory. The lead might be hollowed out on the upper surface; it was then called *lupelele lua utuli*. The disc caused a considerable projection of the upper lip which was much admired. A man, on the other hand, with protruding lips would be nicknamed "the warthog," *namanyindu*, and considered ill favored. 304 301 [832]

This *lupelele* fashion has gone out and of later years the *chipini* or disc worn in the left ala of the nose has become more and more fashionable (Pl. II, fig. 2). Originally the *chipini* consisted of a small disc of lead not larger than a three-penny piece, which lay on the outer surface of the ala, held in place by a stem, *luchinji*, which pierced the ala and passed into the nostril. Now the fashion is to wear a very large disc, often an inch in diameter, which itself occupies a hole in the substance of the ala of the nose; it may be flat-topped and called *chipini cha utenga* ("mushroom"), or the upper surface may often be concave, in which case it is called *chipini cha utuli* (*lituli*, a grain mortar). These disks are made of lead and are sometimes called *lidini*, a recent word and doubtless a corruption of "lead." Others are made of ivory, which may bear some geometric pattern on the exposed surface. A *chipini* used to cost a fowl.

Among Yao men and women, the lobule of the ear is often pierced but nothing is worn in the hole except possibly a stalk of grass.

Combs for use and for ornament are worn in the hair by both men and women. The ordinary comb without decoration is called *likwembeya;* it is made of a number of pieces 301

3: Stannus D-5 (ca. 1912) 1922 FT7 Yao FT7

Chipiliga: (*ku-piliga*, to roll round), a bracelet made of beads wound on a bark-cloth core. 301

Chipa: the same, but the beads cover a double core so that the bracelet is wider.

Masku: a circular hollow cylinder of beadwork which lies flat as a bracelet.

Necklaces are much prised by the women. All the children, too, if possible, are provided with some kind or another, even though it be only a piece of string. They are generally made of beads; charms and their ornamental imitations are also worn as necklaces. Some names refer to the pattern of the beadwork, others refer to the length or fashion of the necklace.

Chikupa is a necklace which hangs down in front to the level of the breasts; it does not go under the arms, as Hetherwick states.[1] It consists of three, four, or five strings of beads in rows, arranged in a pattern.

Anguyeje: hangs down as far as the ankles. The word *Anguyeje* means "chase me!"

Chinganga is made of a single string of beads, but hangs as low as *chikupa*. *Chikupa* is of more than one string and various colored beads enter into its composition, often in *litawala* pattern.

Chipote: consists of a single string of beads of one color tied tightly round the neck without tassel or bunch.

Chikanasuka is worn like *chinganga*, but beads of more than one color are used.

Chitemangu resembles *chikupa*, only more strings of beads are used.

Mapunda: a solid cord of bark cloth covered with beads of one color, either dark blue or white, worn round the neck crossing on the chest and under the armpits; the cords are as thick as the finger. These are worn especially by girls after *Chiputu*.

Chimwembe: a cord of beads as in *mapunda*, but worn round the neck only. The necklace consists of perhaps six strings of beads, the first of which is worn close to the neck, while each succeeding string hangs lower and more loosely.

Chigoti or *chikolija:* made of three plaited strands of beads, generally white.

Nkokoliko: a necklace with a tassel, usually consisting of two large red beads.

Mlalu ("a striped snake"): made of four strings of beads, each row being of one color.

Mchila wekowa ("the rat's tail"): like *mlalu* consisting of two, three or four strings of beads.

Chuma cha masku (*masku*, "bag"): a hollow cylinder of bead work usually of blue and white, worn as a necklace. *Chuma* is the Chiyao word for beads; in Chinyanja, it means wealth.

Litawala is a word referring to the pattern of the beadwork, so called from the resemblance to the eyes of the cane-rat; in *litawala*, white beads are arranged in rosettes round a series of larger black beads in a band.

Most women and many children wear beads round the waist. They are supposed to be very attractive to men. The prostitute wears more than anyone else, for the same reason [832] [648]

[1] Op. cit., p. 117.

4: Stahnus D-5 (ca. 1909)1910 FT7 Yao FT7
Maravi FR4

M 832 this is then added to a brew of new beer and given to her husband to drink. He will then think of and love only herself. This is said to have caused the death of some husbands.

Mpasi: medicine made and drunk by a woman to make her beloved by a certain man.

M 837 844 [847] At confinement a woman has to answer whether she has ever committed adultery; if she denies an adultery she may die, if she owns up and gives the name of the man this can be remedied. Adultery on the part of the father or mother is said to be a cause of abortion.

M 837 A man going away from his village for several months and leaving his wife behind and wishing her to remain faithful puts a knife into its sheath and hangs it in the hut, telling his brother. It is then believed that should anyone commit adultery with his wife separation after the coitus is impossible till some third party comes and pulls the knife from its sheath, and in doing so becomes a witness of the adultery.

M 833 [M 262] [825] [522] Eating of eggs is believed to cause impotence in children or adults. Much fat eaten is said to have the same effect. It is believed that if a hare run up against the leg of a man while going through the forest he will become impotent. It is for this reason that dung of the hare is put at the door of a man to make fun of him as impotent. This is a trick played by *Adzukulu*.

M Y 837 263 753 If a woman who has committed adultery puts salt into the food while cooking, of which her husband will partake, will thereby cause his death. At the present time among the Yao-Mañanja community a woman always calls one of the children to do it—this speaks for itself. A woman, after connection with her husband, putting salt in food, may cause illness among any children partaking of the food.

M 837 If a man accuse his wife of adultery and she denies it, he will procure medicine and place it under her pillow, then in the middle of the night she will wake her husband and tell him the name of her lover.

M 787 777 *Mpingu* = ill omen. A journey would always be stopped if on setting out one of the party die; or should they meet an ant-eater or black snake. It used to be considered a sign of bad luck if one of them knocked the toes against a stone; now if blood flows from the big toe they say it presages good luck.

Y 832 826 The Yao at the age of sixteen years climbs the *mtumba* tree, and finding a fruit which is soft makes a hole in the middle and inserts the penis. After this procedure the penis is said to enlarge as the fruit grows; when the size desired is reached the fruit is cut down.

M 827 The native says that every one has a small animal inside the ear, the sounds it makes causes the man to hear. If the animal escapes the man becomes deaf. The animal is said to be ½-inch long, and wax is said to be its excrement.

M 484 777 Where a man rests on a journey he often puts a stone in the fork of the nearest tree; on many journeys there are regular halting places, often at cross roads, and here every passer-by adds a stone for luck, making quite big heaps.

2: Mitchell E-5 (1946-1949) 1956 FT7 Yao FT7

who are sexually inactive from contracting *ndaka*.[1] At the same time the headman gives each household a piece of the fire which has been newly kindled in the traditional way by rubbing two sticks together.

The mystical danger inherent in the act of setting up a new village is well brought out in the propitiatory prayer and the abstinence from sexual intercourse. Once again it is the village headman who must make the offering to his ancestors; and it is the village headman who has intercourse with his wife so that the effluvium from his sexual activity may permeate the medicine in the hut and so protect the villagers from *ndaka*. Lastly, it is very important that the whole village cooks and is warmed by one fire. 'We are of one fire' expresses the common origin of two villages; though in fact every time a new village is founded a new fire should be kindled. To bring fire from the village of origin is to bring sorcery, since the Yao believe that sorcery can operate between persons closely linked by kinship only. To have one's own fire is to be autonomous from other groups.

The Burdens and Rewards of Headmanship

MacDonald had the perspicuity to see not only that the village headman was the representative of a corporate group and that he represented this group to outsiders, but also that he represented external authority to his villagers. The village headman who in his person stood for the unity of the group, performed certain ritual acts which emphasized this, such as praying to the village ancestors. In spite of the decline of the ritual his position is still regarded as exceptional. Much, however, depends on the rank of the village headman. There may not be much difference in ritual observances and mystical dangers between a headman who has in his charge a meagre three or four huts, and a commoner. In the larger and more important

[1] This is one of the most important mystical concepts of the Yao. I have described this condition and its implications more fully in *Marriage among the Machinga Yao of Southern Nyasaland* (R.-L.I. Paper), forthcoming. Briefly it is a disease characterized by œdema which affects those who are sexually inactive when they are suddenly brought into contact with a person, or an object which he has touched, after having intercourse. The people most affected are the young and the old, i.e. those who cannot have sexual intercourse. Those who are capable of intercourse are expected to have ritual intercourse with a stranger, and so fortify themselves against this dread disease.

2: Mitchell E-5 (1946-1949) 1956 FT7 Yao FT7

604 578 Mwanace. He was the junior marriage surety to the marriage and it was his duty to go to the man's marriage surety, report the matter and arrange to take some action to get the man well again. Mwanace, however, refused to take any action. Instead he tauntingly said, 'Take the matter to Ali Kasunka, it is his village.' The woman did so, and Ali Kasunka asked immediately whether she had not taken the matter to Mwanace. She replied that she had and repeated Mwanace's words. Ali Kasunka took the matter up with Mwanace who now objected to being ordered about. Ali Kasunka, however, impressed on Mwanace that the village was his (Ali Kasunka's) and the authority rested with him. He then went to the man's home to tell them of Wayison's illness. The man's representative came and he and Ali Kasunka consulted a diviner. They found that the man was ill from *ndaka*, which he had contracted in his home village. They found medicine and treated him and he recovered.

604 578 833 787 684 Things came to a head in 1947. Mwanace's younger sister Nyangu II (C11) was married to a soldier who was away. One morning she came to her mother's elder sister, Mbalasyao (C1),[1] and told her that she had found semen on her pudenda and could not recall having had intercourse with anyone. Mbalasyao told Ali Kasunka about this. It was clearly a matter for divination and Ali Kasunka called Mwanace and told him that they ought to consult a diviner. But Mwanace's attitude, even in such a crisis as this, was hostile. He refused and said it was not his work to do this sort of thing. Ali Kasunka therefore went to a diviner with his sister Mbalasyao. The diviner said the semen was Mwanace's. He said that he had entered her hut magically and had sexual intercourse with her without her knowing it.[2] When Ali Kasunka got back to the village he called Mwanace and asked him what tricks he was playing in the village. Mwanace said that he had done nothing—it was not his village. Ali Kasunka then vaguely hinted at his crime. Mwanace pressed for more details and Ali Kasunka accused him outright of sleeping with his sister. He had hardly uttered the accusation before Mwanace had drawn a knife and attacked him. Mwanace was screaming something to the effect that Ali Kasunka had come to him with lies about having seen a diviner. Ali Kasunka beat off the attack and reiterated the accusation. Mwanace now turned his rage upon the woman and tried to catch her. Two of the men in the village then caught Mwanace and subdued

[1] Her mother, Amaliama, was dead.

[2] This is called *cigonecesya*. It combines the use of magic with sister-incest. [835] To the Yao mind there could be no clearer proof of sorcery. I have already mentioned the importance of sister-incest in relationship to the beliefs surrounding the sorority-group. See p. 146.

2: Mitchell E-5 (1946-1949) 1956 FT7 Yao FT7

him. The woman in the meantime had run to Chiwalo's hut half a mile away. Here she complained to the chief that Mwanace wanted to kill her. Chiwalo refused to listen to her complaint and sent for Ali Kasunka. When he had come and explained the sequence of events, he continued saying that he would like to take the case to court. Chiwalo, who was Ali Kasunka's wife's father's sister's son (hence a classificatory younger brother) and whose henchman Ali Kasunka was, refused to arbitrate in the case but referred it to Kawinga. On the day of the case the woman's husband came back from the Army. The case was tried and eventually the court assessors awarded a damages claim of £3 to be paid by Mwanace to his sister. The husband, at the same time, said that he could not remain married to her because whenever he saw her he would think that she had slept with her brother and in court he gave Ali Kasunka a marriage termination payment. The tension between Ali Kasunka and his 'sister's son' did not end there however. When they got back to the village Ali Kasunka remonstrated with Mwanace saying, 'Are you not ashamed to have married your sister?' Mwanace said that he could not stand that sort of thing and went back to live uxorilocally.

A crucial point in this case history is that the women did not like Mwanace. Almost certainly there would have been a split in the village had the women had more confidence in Mwanace. The tension between Ali Kasunka and Mwanace, although the conflict is inter-generational, started, as it consistently does, from the relationships of a man to the women of his matrilineage. Without the support of the women, younger brothers or sister's sons are impotent against the power of their senior relatives. It is only when they can induce the women to follow them and to leave their rivals that they can found a new village and thereby begin to earn prestige. Therefore, although the men are the active agents in bringing about a physical act of fission, they are in fact only making manifest a situation which is latent within the lineage.

The position of the senior male matrilineal relative is of fundamental importance in questions involving segmentation. His position is seen most clearly in the dominant matrilineage, in which the name of the village is inherited. The Yao practise 'positional succession'. A man not only succeeds to his mother's brother's name but also to the position of the mother's brother in the social structure as a whole.[1] It follows that when the

[1] See Chap. V, p. 121.

3: Stannus D-5 (ca. 1912) 1922 FT7 Yao FT7

584 betrothed. In this latter case, the child lives with one of his wives and is brought up in his house.

881 When this girl first menstruates, she tells the man's wife who in turn informs her husband. He then goes out into the bush with his axe, while the wife reports to the young girl's mother and to the man's female relatives. The girl is put to rest on a mat in the hut, the women remaining with her after shutting and fastening the door. The man, meantime, cuts a strip of bark, hammers it out into a piece of cloth, and puts the cloth, wound round and round the stem of the tree from which he has taken it, on the roof of the hut where the girl lies. The first passer-by who notices this sign, spreads the news; then all the women in the village assemble and trill with their tongues to show their joy, while the women in the house sing.

Until the girl's menstrual period is over, the old women relatives sleep each night in her hut, and instruct her in the taboos relating to menstruation. The front door is kept closed, and exit for purposes of nature is made only through the back door. When the girl is up again, the fire in the hut is extinguished, the bark-cloth which she has worn and her sleeping mat are rolled up and put away in the veranda-room, and the girl, having procured clay, replasters the floor of the entire hut. A woman then brings fresh fire from another hut.

841 At subsequent menstrual periods, there is no ceremony. The girl, as is the custom of all women at such times, must sleep on a mat apart from her husband. Sexual intercourse is strictly forbidden under penalty of dire sickness. For the same reason, no menstruating woman may put salt in the food, etc. Until the girl's first menstrual period is over, the man to whom she is betrothed stays in the hut of another wife. Later, he may cohabit with the girl.

881 If the girl has not been to her initiation ceremony, *Chiputu*,[1] on returning to her husband's hut after this ceremony, the first coitus takes place in the veranda. It must be in-
833 complete, so that ejaculation takes place after withdrawal and the semen falls upon her cloth. This should be taken by the girl to some of the old women in the village who report on the proceedings. Should withdrawal not have taken place, the man is considered bad and the girl, unless doctored, may sicken. Later, ordinary cohabitation is allowed. This species of ceremonial coitus is called *Kusas mauta* or in Chinyanja, *Ku-tapa mafuta*, "to roll away the oil," referring to the oil with which the girl was anointed at *Chiputu*. A girl who has no betrothed, on returning from *Chiputu* to her grandmother is given medicine similarly to prevent her sickening.

584 *Betrothal and marriage in adult life.* Apart from child betrothal, when a man seeking a wife, sees a girl he fancies, he talks the matter over with his brother, uncle, or some friend, who then goes and makes overtures to the girl's uncle or brother, her guardian or *nposue*[2] as he is called. The *nposue* corresponds very closely to our idea of a god-parent; he may be called the sponsor. The word "surety" is used by Macdonald.[3]

[1] Vide infra, p. 209. [2] *Nposue* is a word adopted from the Chia, *Nhosue*.
[3] Macdonald, op. cit., vol. 1, p. 118.

3: Stannus D-5 (ca. 1912) 1922 FT7 Yao FT7

pregnant, the meeting of the sponsors will have to be postponed until after the ceremony connected with her first quickening with child, *Litiwo*.[1] This ceremony must be performed whether the girl is regularly married or not. One party cannot ask the other for permission that both ceremonies take place at the same time. The answer would be given, "You are asking me to kill two beasts with one bullet." In rare cases, the chief may sanction the marriage and *Litiwo* ceremonies taking place at about the same time, i.e. the marriage is arranged before the child is born. 584 843

Widowhood. A widow is considered unclean for a period after the death of her husband. She wears a band of palm-leaf or string around her forehead. When the period is passed and some man wishes to marry her, arrangement is made with some other man to cohabit with her for payment; she is then said to be clean and can go to her prospective husband. This ceremony is called *kutema ngonji*, "to cut the strings," or in Chinyanja, *ku-dula nilasa*, "to cut the palm"; unless it is performed, the new husband will sicken. The man introduced for the purpose is called by the Yao, *lituna*, the "hyaena," "he who comes by night." 589 587 [833]

Divorce. From time to time, married people disagree and one deserts the other. If the woman leaves the man, he has a claim against her and the man to whom she goes for all the clothes he has supplied her with during their married life. The husband usually sides with the wife's relatives and arranges that they look after the children; he does not claim them. When the husband and wife mutually wish to separate, they both meet with their sponsors and everything is duly arranged. The husband will give his wife an arrow, saying, "*Mpamba* (the arrow)," meaning, "If I come back, may it kill me." The place of the arrow may be taken by a bullet or any other object, even a piece of grass. The man will add, "*Swaka, swaka, no likowe!* (rattling, rattling, it is a rat!)," inferring that if his wife hears something rattling in the house, it is a rat, not himself trying to come back. There is no definite payment of compensation. If the woman marries again, she presents the "arrow" to her second husband as a sign that she has been freed from her first marriage; without this token, no man would marry her. 586

Actual adultery was in the old days very rare owing to the strict enforcement of rules, and the case of a woman demanding divorce on account of the adultery of her husband formed a *cause célèbre*. The case heard by the chief would last for days and hundreds of people would come to listen. Neighboring Anyanja pleaders would be invited to speak and great excitement prevailed, as these latter would be accompanied by their villagers, who, to the accompaniment of continuous drumming, would sing, "*Mbawala anakadwa m'nkonde*,[2] (The bush-buck has run his head into the net)," while they ran about running their heads into their game-nets. 684 586

Other causes of separation are neglect of duty, sterility of the wife, and habitual death of the children born. 586

[1] Vide infra, p. 274. [2] Chin.

3:Stannus D-5 (ca. 1912) 1922 FT7 Yao FT7

or a girl who has just returned from *Chiputa* must not touch the child, as it is said, "Her body is hot and would give fever to the child." To guard against such a happening, some "clean" woman, after handing some beads to the mother, will ask to be allowed to take the infant. This indicates that should it sicken, the beads will pay the medicine-woman who comes to cure it. The mother and baby are simply washed in water and are not treated with medicine, unless meconium has been voided before the child was delivered.[1] If the infant dies before it is presented to the outside world, it is disposed of in the same way as a stillborn child, i.e. buried in the ash-heap. About the tenth day, the baby is adorned with a girdle of beads and two little pieces of stick obtained from a medicine-woman to make the infant grow fat. 846 [845 766] [856]

The length of time during which the father and mother refrain from cohabitation after the birth of a baby varies greatly according to circumstance. Four months is probably a minimum, while two years, during which the woman suckles the child, is the common interval. After the first coitus, the man and woman wash themselves and the baby is bathed in the same water to prevent any ill coming to it. 833

Suckling often continues much longer than two years. If the mother dies, the child may be suckled by the grandmother, an aunt, or some other woman, but the breasts must first be treated with medicine or the child would die 853

A child born breech first is called *salungo*, a word which is also used to denote a variety of domestic fowl which always has the appearance of having its feathers ruffled. A child who dies before the father and mother have resumed sexual relations is buried in a graveyard apart from that of adults. The grave, dug with sticks, not hoes, is very shallow, and when it is filled in, a heap of stones is made above it. Only women attend the burial. A deep grave would cause the mother to go on losing children at an early age. The body of such a child is called *lituwu*, "hyaena." 845 766

A woman dying undelivered is placed in the grave in the usual way and then, before filling in the earth, one of the grave-diggers descends into the pit, cuts through the enveloping shroud, and incises the abdomen. One end of a long bamboo stick or reed is inserted in the incision and the other end is brought out to the surface of the grave. If this were not done, "many would die in childbirth." 844 766

Twins are not killed by the Yao but are well treated and always cared for equally. They are given similar clothing and food.[2] There is a story that the mother of Nkwamba, 845

[1] *Chinyanja*, vide infra, p. 288.

[2] C. A. Werner, 'Among the Congo Cannibals, by John H. Weeks, London, 1913, a review,' (Man, vol. 14, no. 15, 1914, p. 15).

I take this opportunity of referring to Miss Werner's review in which, speaking of twins, she says, "They are always among the Anyanja given the names *Mapali* and *Nyama*." *Mapali* in Chinyanja refers to a kind of musical instrument and the Chiyao meaning is "cocoanut palm." *Nyama* is a Chiyao word which certainly means "the back." It is sometimes used of the second born twin but does not occur in Chinyanja. I have never heard of twins either among the Wayao or the Anyanja spoken of by these names. A mother carries the first born on the right arm and the second born on the left, but, so far as I know, she does not give a duplicate grasping nor make a habit of eating equally with both hands. [114]

3: Stannus D-5 (ca. 1912) 1922 FT7 Yao FT7

then listens to an account of the circumstances attending the illness and death. The point 768
at issue is whether there is any evidence pointing to death from unnatural causes which 622
requires consulting a diviner. The chief practically always agrees with the relatives, and it is said that he will never press them to go to the *wachisango* unnecessarily. The case may end with this conference, or here may begin the long series of events described under *usuwi*.[1]

During the month subsequent to the funeral, certain taboos have to be observed. The 765
widow may not bathe, and with the exception of the *ausilo*, all who attended must refrain 768
from sexual intercourse. At the expiration of this period, beer is brewed in the village, and all the friends and relatives are again summoned. This beer-drinking is called "the beer of rottenness," or "the beer of resignation." In addition to the beer, food is provided, and everyone helps himself without ceremony. *Chindimba* is sung and danced and at the present day, bands of trained dancers attend, including *ching'wenyeng' wenye*.[2] A pot of beer is sunk into the ground, marking the site of the dead man's house. The night of *malapala*[3] [833]
sees husbands and wives reunited, and the widow may go through ceremonial intercourse with a man appointed for the purpose called *litunu* or *mbilo*. Sometimes the widow refuses *litunu*, and is given medicine instead to cleanse her; her body is then no longer "hot" and likely to bring disease to those about her. A widow does not marry again for two or three 587
years. A young man who loses his wife has no longer any standing in her village after 768
malapala. He is usually given a present, with the suggestion that he go elsewhere. After the death of an infant, the mother is considered unclean. She sleeps on a mat apart from her husband till after the ceremony of shaving, and then undergoes a ceremonial coitus with her husband — in which case he is called *litunu* — after which, ordinary cohabitation is resumed. If she has been a widow, or if the child was born "with disease," another man acts as *litunu*.

The morning following *malapala*, all the fires in the village are extinguished. A fresh 769
blaze is then kindled with the fire-drill, *lumangu*, either in the chief's house or in some spot [372]
nearby, and from there, fire is carried to all the houses. The ashes of the old fires, the stones supporting the cooking pots, and the porridge sticks are taken to the cross-roads, and there destroyed. Everyone then shaves all his own hair, head, axillae, and pubis. [302]
The custom of the second shaving by the *ausilo*, described in *Africana*,[4] is, I think, an adaptation from the Anyanja. A year later, beer is again brewed, and all the relatives summoned to the village to partake of it. There is dancing, but no ceremony.

The Yao bury their dead in regular graveyards in wooded country, the thicker the 764
forest the better, often two or three miles away from a group of villages. Different villages bury their dead in different parts of the burial ground; relatives are usually buried near one another. Graves are never revisited, and no one would enter a graveyard except at the 769
time of a funeral, and then only after obtaining permission from the chief. Such spots are

[1] Vide infra, p. 296.
[2] Vide infra, p. 370 and Pl. I.
[3] Beer-drinking.
[4] Vide infra, p. 296.
[5] Macdonald, op. cit., p. 111.

1: Tew E-4 (no date) 1950 FT7 Yao FT7

cipate yearly in the great initiation festival for boys and girls. Consequently as they repeat each year the lessons of their own initiation, the ceremonies are the main vehicle of Yao culture.[1]

There are also two Moslem ceremonies:

(1) *Jandu*, the boys' Moslem baptism, which takes about seven days, and is usually worked in with *hpanda*:

(2) *Nsondo*, the girls' Moslem baptism, which is the same as *jandu*, but usually quite separate from *cipatu*. It is important that the wife of a Moslem should have her *nsondo* so that she knows how to prepare the food properly at Ramadan.

Menstrual and Other Taboos

Menstruation is held to be dangerous. A special mat is used by the woman during this time, and is rolled up and kept during the rest of the cycle. The hut is completely replastered after menstruation. Intercourse during menses leads to disease of the man. Sexual contact is dangerous to persons at certain other periods: during initiation ceremonies, during mourning, and for babies who have not been through the protective rite. The danger is thought to lie in *ndaka*, a dread disease characterized by swelling. This may be transmitted by salt in the food. Deaths are often attributed to 'salt'. Much of the significance of the mourning is that medicines are prepared which protect the mourners against the dangers attendant on sexual activity.

Burial Rites

News of a death must be sent to the chief by a messenger carrying a single fowl. The chief gives a present of calico for wrapping the body, and a goat for the burial men. These are called *ausilo*, neighbours unrelated to the dead, who volunteer for certain duties. They prepare the body for burial and carry it in procession to the graveyard outside the village. No uninitiated person is allowed to see the funeral. All who attend the burial are prohibited from sexual intercourse for one month. After this time the prohibition is lifted by a ceremony of beer drinking and feasting, and on the following day all fires in the village are extinguished, and then relit, and the mourners are shaved. A year later beer is brewed for a final ceremony.

For a period after her husband's death a widow is unclean, and has to be purified by ritual intercourse with a man who is paid. The widow is not allowed to remarry for two or three years. A widower leaves his wife's village, after receiving a parting gift. The widows of ordinary persons are not inherited. If a man has himself a 'name' (rank and social position), he has an heir, who inherits also the wives of his predecessor. But if the heir (the maternal nephew) has married a cross-cousin (mother's brother's daughter) he would not consider the wife's mother as his inherited wife.

Before the burial the dead man's hut used to be destroyed, together with his possessions. Immediately afterwards a consultation is held as to whether retaliatory action against sorcerers is called for. The *ausilo*'s duties include not only the conducting of the burial, but also the subsequent inquiry and the conduct of the second ceremony, the beer drinking, at which they shave the mourners. A man who has

[1] Main sources for girls' initiation: Heckel, 1933, p. 19; Stannus, 1, 1910, pp. 184–7; 4, 1922, pp. 269–74; Stannus and Dovey, 1913; Duff, 1903, pp. 312–15; Abdullah, 1919, pp. 16–17; Macdonald, 1882, vol. i, pp. 125–30; Werner, 1906, pp. 126–7; Johnston, 1897, p. 410.

2: Mitchell E-5 (1946-1949) 1956 FT7 Yao FT7

Further enquiries may reveal that this is only a section of a larger village, possibly a hundred or more yards away. 622

The boundaries of a village may not always be clear. Clusters of huts which are part of one village may be physically nearer another, but in the minds of the Yao, who see not only the huts but also the social relationships of the people occupying them, there is no confusion at all. As a general rule the villages are fairly compact and clearly demarcated from others, and even strangers have no difficulty in recognizing the autonomy of the group which is expressed in many different ways. MacDonald recorded that formerly a headman performed a certain amount of ritual which symbolized the unity of the village.[1] Much of this has fallen away, but the unity remains. 621

The ritual surrounding the foundation of a new village bears testimony to its persisting political significance. In this ritual the unity of the group, against other similar groups, including the village from which it has sprung, is expressed. On first arrival at a new village site the men build grass sheds, beginning with that of the headman. That night the headman pours a cone of sacred flour at the root of a tree on the site, and asks the spirits of his ancestors whether the site is propitious. Early next morning he examines the cone to see the answer. If a side of the cone has collapsed it does not augur well and another site is selected. If the cone is still whole it is taken that the spirits acquiesce, and permanent huts can be started. The headman then goes into the bush to find medicines[2] which he mixes with groundbeans. That night, with the medicated groundbeans in the hut, the headman has intercourse with his wife. In the morning those who are not sexually active come to the headman's grass shed to drink some water in which the medicine has been steeped and eat some of the medicated beans with a little porridge, which the headman's wife has prepared from the sacred flour. This medicine is called 'the medicine to strengthen the village' (*mtera wakulimbika musi*). Until then all members of the village should have been continent but after this sexual relationships may be resumed. The object of the medicine is to prevent those 622 621 787 622 621 751 834 372

[1] See pp. 31-2.

[2] *Nkuungwa* and *nkuta*, two plants commonly used for protection against *ndoka*. See *Ln.*, p. 112. [834]

622 who are sexually inactive from contracting *ndaka*.[1] At the same
621 time the headman gives each household a piece of the fire which
751 has been newly kindled in the traditional way by rubbing two sticks together.

● 834 The mystical danger inherent in the act of setting up a new
372 village is well brought out in the propitiatory prayer and the abstinence from sexual intercourse. Once again it is the village headman who must make the offering to his ancestors; and it is
[833] the village headman who has intercourse with his wife so that the effluvium from his sexual activity may permeate the medicine in the hut and so protect the villagers from *ndaka*. Lastly, it is very important that the whole village cooks and is warmed by one fire. 'We are of one fire' expresses the common origin of two villages; though in fact every time a new village is founded a new fire should be kindled. To bring fire from the village of origin is to bring sorcery, since the Yao believe that sorcery can operate between persons closely linked by kinship only. To have one's own fire is to be autonomous from other groups.

The Burdens and Rewards of Headmanship

622 MacDonald had the perspicuity to see not only that the village
554 headman was the representative of a corporate group and that he represented this group to outsiders, but also that he represented external authority to his villagers. The village
[769] headman who in his person stood for the unity of the group, performed certain ritual acts which emphasized this, such as praying to the village ancestors. In spite of the decline of the ritual his position is still regarded as exceptional. Much, however, depends on the rank of the village headman. There may not be much difference in ritual observances and mystical dangers between a headman who has in his charge a meagre three or four huts, and a commoner. In the larger and more important

[753] [1] This is one of the most important mystical concepts of the Yao. I have described this condition and its implications more fully in *Marriage among the Machinga Yao of Southern Nyasaland* (R.-L.I. Paper), forthcoming. Briefly it is a disease characterized by œdema which affects those who are sexually inactive when they are suddenly brought into contact with a person, or an object which he has touched, after having intercourse. The people most affected are the
[833] young and the old, i.e. those who cannot have sexual intercourse. Those who are capable of intercourse are expected to have ritual intercourse with a stranger, and so fortify themselves against this dread disease.

2: Mitchell E-5 (1946-1949) 1956 FT7 Yao FT7

disease *ndoka*.[1] This disease, as we have seen, affects the sexually inactive when they are brought into contact with those who are sexually active. But the disease will only affect the members of the matrilineage of the errant person. For example, suppose a labour migrant is coming home from Southern Rhodesia and has, among other things, a few pounds of salt in his baggage for a gift to his relatives. Suppose also that while he is returning he has promiscuous intercourse. The salt becomes charged with sexual heat and if he gives it to any of his matrilineal relatives to cook with, they will contract this disease. He must therefore give the salt to members of another matrilineage, even if they live in the same village. 613 753

It is when the unity of the matrilineage is threatened, by either death or division, that its mystical value appears most clearly. When a member of the matrilineage dies the whole matrilineage is thrown into mourning and remains continent for three days. On the fourth day they perform a ritual purification and some members resume sexual relations, but the closest matrilineal relatives, such as the mother and uterine siblings, remain continent for the remainder of the mourning period, which is about 36 days. 613 765 834

It is tension within the lineage which is most closely attended by dire results. The most important reflex of this tension is accusations of sorcery. Good relationships among members of a matrilineage are adjured, mainly because friction opens the way to sorcerers. The Yao believe that sorcerers kill their matrilineal relatives so that they may share the flesh with other sorcerers. The sorcerer is fundamentally a wicked person and may kill any relative but is more likely to kill those whom he hates. Hence it is most important that relationships are kept amicable within a matrilineage for fear that sorcery ensues. 613 626 754

An interesting variation of the dangers of sorcery is the belief that sorcerers take the opportunity of squabbles within a matrilineage to kill one of the members. The rationale behind this is that the diviner's instruments are unable to detect the origin of the sorcery beyond the immediate cause. A diviner will indicate that the cause of death of, say, a child is sorcery, but that the witch is obscured behind the quarrelling words of some relative. Consequently, danger to a matrilineage ensues when one of its 613 754 578 626

[1] See Chap. V, p. 112.

The m'mikili then gets off on the left side, his assistant on the right and they stand in the shallow depressions. The m'mikili starts asking riddles; he says, "*Ndewi* (riddle)!" and is answered by his assistant "*Jiicha* (let it come)!" Here is one: 881 533 539

"*Kangwe, hapila pansi!*"
"The little mouse it has defecated, it has gone into the ground!"
Answer: "*Mikiqui* (roots)!"

He then goes round the crowd for the answer—if they cannot guess, they say, "*Ali nagwe,*" "it is yourself (to answer)." There are hundreds of such riddles.

The m'mikili points to the tusks depicted in the *chinyago* and tells the people, "Long ago this used to be an elephant; look at the tusks." The hump at its back he tells them is the same as *ching'wadang'wada* which they will find farther along.

They pass next to *mbunda*, the zebra; a pair, male and female, is always figured.

"*Ajiji ngati mbunda ja mbuja Achilamala! Yoonpe pakata!*"
"This one is it not the zebra of Mister Mlemala! everything (is) beautiful!"

Sometimes a story is told to show that the zebra used to go to the sea to drink but seeing the whale, he ran away and came to the country of the python.

Then to *nete*, the python; he sings:

"*Anaonto hunjinji! pawa, ejo! Yoonpe pakata!*"
"You python come and answer! all (is) beautiful!"

At the crocodile, *ngwena*, he sings:

"*Changwena ulamba, pawa! ejo! ahapana mumpalapala mani!*"
"Mr Crocodile cleverness, he sleeps at the side of the water!"

At *mwezi*, the moon:

"*Amwezi ulamba, pawa! ejo, amani!*"
"You moon cleverness, !"

Next, they come to *wakolele ulawa*, the people drunk with beer. Two men lie on the ground, feet to feet with nothing on; the pudenda are covered with bark-cloth and the whole of their bodies painted with earth and flour to look like two female figures in earth. The song is:

"*Wakolele ulawa: hunindo awawi, wakolele ulawa!*"
"Drunk with beer: come and see the women, drunk with beer!"

A moral is pointed: the disgrace to a woman who gets drunk, lies on the ground, and exposes her person. As the m'mikili makes these remarks, the figures breathe stertorously as a drunken woman would. He conducts the *wali* and all the other people past many of the other images such as *chiwi*, *ngulu*, *ndemunda*, *mbala*, etc., and only stays at those he considers his own special *inyago*. The seven specially dealt with by Mlemala were as above together with *mbalapi*, the sable antelope: [834 689]

3:Stannus D-5 (ca. 1912) 1922 FT7 Yao FT7

Peas, sesame (*Pisum sativum*), are grown in abundance. There are two other varieties; 244
mtsoo (groundnuts), and *chimbowira*. 262

Sweet potatoes: *mbatata* (*Ipomoea batias*), of which the natives are very fond; they distinguish a red and a white variety, *mbatata ngunjejeu* and *mbatata ngunuwera*.

The tuber-like root of a bush called *ngumbu* is also eaten, likewise the young underground shoots of a palm tree. The leaves of the sweet potato and the leaves of many wild growing plants are collected by the women and cooked like spinach; the flowers of pumpkins are used in a similar way. Of fruits eaten, the banana, *kipombo*, takes first place. A very large number of species of *Ficus* are grown, including *makumbuka*, *mbinga*, *mkali*, *nanira nungunga*, *kabutu* a dwarf banana, *kirigwa* a wild banana, and *mlonga*, the plantain. The paw-paw is found all over the district. There are several varieties of pumpkin, *lyungu*, including *mbunda*, *chindondoli*, and a very large species called *mtuu wa ngwena*, "the crocodile's head." Varieties of cucumbers include *lingaka* and *kahitungula*. 262 222

A large number of wild fruits are eaten, among them figs, *hikuju* (*Ficus*), *kiuku* (*Uapaca*), *chitili* and *kiwago*, the fruits of two species of *Landolphia*, *matonga* or Kaffir oranges (a species of *Strychnos*), *chikundu*, the fruits of *Hyphaene* (palms), *makwakwa* (*Myrianthus*) a wild tree belonging to the mulberry family, and others, *ndawa*, *makangandembo*, *ndondowake*, *chingulungulu*, *chindopolya*, *malembe*, *likwenda*, etc. The seeds from the heads of bulrushes (*Typha*) are mashed up and eaten.

All fish are eaten except the *ngunga*, which always causes urticaria.

The flesh of all the antelopes, of oxen, sheep and goats is eaten greedily; only bushbuck is avoided by some people as it is said to cause a skin eruption. Elephant is shunned by many on account of its rough skin, also rhinoceros because of the ulcers which it often has on its body, and hippopotamus on account of the marks on its back which are thought to be akin to leprosy. People eating the flesh of these animals are supposed often to sicken with leprosy, the pachydermatous skin, the ulceration or anaesthetic depigmented patches of that disease being reproduced, as the case may be. Few will eat pig or warthog on account of the digging habits of these animals. It is thought they may sometimes grub up bodies from graves. These flesh taboos may be due to Mohammedan influence. The lion, hyaena, and fox no one would touch, as they are supposed to be connected with *uswi*,[1] but the heart of the lion might be eaten to acquire courage. Few will touch leopard flesh, but Kasungo's descendants do so. All will eat of the flesh of the serval cat but very few of the common wild cat. The rock rabbit, *ngungwira* (*mbira*, Chin.), is refused by most Yao as it is a "beast without shame," having no tail to hide what should in decency be hid. Very few will partake of the baboon, but monkey is acceptable to many. A few reject porcupine, supposing they will break out in spots, while the zebra may cause stripes, and none will touch the skunk. No one eats *zunje*, a mouse that is believed to die if it crosses a path. All kinds of rats are eaten, but the shrew-rat and cane-rat only by boys. Snakes 262 753 262 [177] [834]

[1] Vide supra, p. 324.

6: Mitchell E-5 (1946-1947) 1949 FT7 Yao FT7

844 believe that she will die. The man's representatives are therefore able to establish the child's paternity from the birth-pang confessions of the woman.

846 The child is kept in the hut where it was born, for six or seven days, while the umbilical cord dries and falls off. During this time (*kuli*) the child is unnamed, and [553] it is named only when it is taken out of the hut. Should it die during this period of seclusion it remains unnamed and is referred to by a special term (*litaya*, pl. *mataya*). [128] I have therefore been able to enumerate live births by means of the distinction made between miscarriages and still-births (*kwasanga*) and children who lived long enough to be referred to as *mataya*. After the birth of the child the woman may not have 846 intercourse for four or five months. To do so would be to endanger the life of the [854] child with a disease called *ndaka*,[1] which is contracted by a sexually inactive person 834 when he comes into contact with a sexually active person. The husband may have intercourse with a second wife, but must take care to medicate himself so that he does not endanger the life of his child. When the child is about 4 or 5 months of age the parents perform ritual intercourse and medicate the child against the mystical dangers of sexual activity; sexual relations are then resumed.

834 The Yao say that a second child should not be born while the first is still being [853] suckled. Since lactation continues for about two years I am uncertain whether monogynists remain continent, as they say they do, or whether *coitus interruptus* is 464 practised. It is quite usual for husbands to become labour migrants when their 842 children are still very young. I have known women to write to their husbands who are away working and tell them to return because their children have 'grown', i.e. have been weaned. Labour recruiters had difficulty in recruiting men immediately after the soldiers had been demobilized at the end of the war, because the women objected, saying that they had remained childless long enough and the men must first wait until children were born. However, actual examination of birth-dates [163] shows that children are sometimes born within a year of one another and sometimes there are quite big gaps. The two-year gap between children is probably an ideal which few attain.

3. The Estimation of Fertility

(a) *Sundbaerg's Age Divisions*

128 As a preliminary estimate of fertility, Sundbaerg's trichotomy of ages may be considered. The argument behind this division of the population into Youth, Middle Age, and Old Age is that those populations with a high proportion of youth have a greater tendency to increase. Table V shows this trichotomy for the Yao with the same material for some other populations shown for comparison. Where the gross reproduction-rate is known for the period shown in the table, this is included.

128 At any one time a certain proportion of the population is absent from the area, 162 usually at some labour centre. Hence the proportions of the population are distributed abnormally. In all there appeared to be a total of sixty-three men, women, and children absent from the hamlets, who would otherwise have been living there. Hence in Table V these have been included in the totals in the 'Yao with absentees' proportions.

[171] [1] A disease of this sort is believed in by many Central African tribes. Among the Nyanja-speaking peoples it is known as *tsunpha*.

1: Tew . E-4 (no date) 1950 FT7 Yao FT7

775 782 Kangomba, used to persuade Nyanja to help in the sacrificial rite. When Kapeni in turn fled to Mount Soche from the Ngoni, and died there, the Yao addressed their offerings to him, not to Kangomba.[1] The word *Mulungu* has sometimes been interpreted to mean Supreme Being, God, Creator, but among the Yao it seems not to have [776] a personal connotation. It was used to describe the agent in any mysterious event,[2] or the place where the ancestor spirits (*masoka*) were supposed to dwell. Daily life was [769] full of acts of respect towards the ancestors, who were regarded as jealous of the living, and requiring constant propitiation.[3]

Sorcery

754 Accusations of witchcraft and measures for dealing with it play a dominant role in Yao social life. With certain exceptions nearly all diseases and deaths are thought to be caused by sorcery. The exceptional causes are: the hand of God, old age, the transgression of certain taboos, and battle wounds. If sorcery is suspected the relatives of the sick or dead man consult the diviner to identify the offender.

Yao (in common with the Maravi and many peoples of Central Africa) believe that sorcerers have a craving for human flesh, which they satisfy by killing with magic the victims of their malice and hatred. They acquire their magical powers by an apprentice- [835] ship, which might include incestuous relations with mother, sister, or mother-in-law, or sleeping on the grave of the mother for one night. The sorcerer then learns the medicines and finally demonstrates his power by killing a young relative by magic; [266] he waits till the victim is buried, and then magically exhumes him for the secret feast with his fellow sorcerers. Each sorcerer who shares the flesh owes a debt to the one who secured the victim.

[751] Charms are used as preventive measures against sorcery. When a diviner has 754 diagnosed the cause of death as sorcery, retaliatory measures are taken. The headmen 683 of the village could either call in the witchfinder to identify the offender or he could call in the diviner to take action against all the sorcerers in the village. After the [695] diviner, *Mabisalila*, had revealed the guilty ones, they were challenged to take the poison ordeal to prove their innocence. If they died, the proof and the punishment were simultaneously accomplished. If they survived, the diviner was held to have been at fault and they were acquitted. The witch doctor was supposed to entice sorcerers to the graveside, and slay them with magic more powerful than their own.

[695] The diviner's findings are to-day checked by the poison ordeal administered to a chicken. A sorcerer detected in this way might be asked to provide medicine for the man whose sickness he had caused, or after a death he might be compelled to pay compensation. If the accused is a village headman, he will not be summoned before a chief, but his brother will take the villagers away from the sphere of his influence, or he may be chased away from the district. Accusations of sorcery follow certain regular lines. Nearly all accusations fall on relatives. Diviners are consulted by matrilineal relatives of the sick or dead person, and the man most usually accused is the brother of the accuser, or the husband of his sister. Witchcraft is therefore a manner of expressing the hostilities latent in these relations, which are, in the Yao social system, full of tension.

[1] Macdonald, 1882, vol. i, p. 70.
[2] Hetherwick, 3, 1902.
[3] Heckel, 1935, pp. 14–15; Macdonald, 1882, vol. i, pp. 58–75, 204–13.

2: Mitchell E-5 (1946-1949) 1956 FT7 Yao FT7

593 brother, is called *asyene mbumba*, or 'the warden of the sorority-group'. As one would expect among a matrilineal people, the link between a man and his mother and sisters is strong. But it is the link with his sister that is strongest. She relies on him for protection, particularly when she becomes ill, but also in her [582] relationships with her husband. Her brother will be her junior marriage surety, and he will give the consent which will allow a man to marry her. Also a woman's brother will have to consult [731] the diviner and find the medicines when she or her children sicken. In times of distress, as, for example, if her crops have failed, she will appeal to her brother for help. Similarly the man is dependent on his sister in a number of subtle ways. He can always rely on her for hospitality, and is able to get a meal from her if he needs it. But his dependence on his sisters for prestige is much more important. The significance of this will emerge when we see the *mbumba* organization in the light of the segmentation and fission of the lineage. A man can only found a new village if he has the full support of his sisters. A sister also plays a most important rôle at the birth of his children. She represents him both at the first fœtal-quickening ceremony and at the birth of his child, when she listens to the birth-pang confessions of his wife.[1]

At the same time the relations of sister and brother are restricted by custom. A man must never appear too familiar with his sister, especially in sexual matters. He may not, for example, [513] sleep in the same hut as she does; if she is away and he sleeps in her empty hut he must not make his bed in the place where she usually sleeps. He may not even sit on her sleeping mat. [835] Authentic cases of incest with a sister are extremely rare, whereas I recorded three or four cases of father-daughter incest while I was in the field. Supposed cases of brother-sister incest are recounted and discussed widely. This is understandable because [754] a man who is suspiciously familiar with his sister is suspected of being a sorcerer, since it is widely believed that a sorcerer usually obtains the power that he needs for the performance of his dire deeds by sleeping with his sister. The riddle of the initiands—'What is the sweetest fruit which may not be tasted?' Answer, 'Your sister'—neatly reflects the attitude of the Yao.

The close link of brother and sister is also reflected in the

[1] The significance of this is explained in Chap. VII, p. 185.

2: Mitchell E-5 (1946-1949) 1956 FT7 Yao FT7

604 578 Mwanace. He was the junior marriage surety to the marriage and it was his duty to go to the man's marriage surety, report the matter and arrange to take some action to get the man well again. Mwanace, however, refused to take any action. Instead he tauntingly said, 'Take the matter to Ali Kasunka, it is his village.' The woman did so, and Ali Kasunka asked immediately whether she had not taken the matter to Mwanace. She replied that she had and repeated Mwanace's words. Ali Kasunka took the matter up with Mwanace who now objected to being ordered about. Ali Kasunka, however, impressed on Mwanace that the village was his (Ali Kasunka's) and the authority rested with him. He then went to the man's home to tell them of Wayison's illness. The man's representative came and he and Ali Kasunka consulted a diviner. They found that the man was ill from *ndaka*, which he had contracted in his home village. They found medicine and treated him and he recovered.

604 578 833 787 684 Things came to a head in 1947. Mwanace's younger sister Nyangu II (D11) was married to a soldier who was away. One morning she came to her mother's elder sister, Mbalasyao (C1),[1] and told her that she had found semen on her pudenda and could not recall having had intercourse with anyone. Mbalasyao told Ali Kasunka about this. It was clearly a matter for divination and Ali Kasunka called Mwanace and told him that they ought to consult a diviner. But Mwanace's attitude, even in such a crisis as this, was hostile. He refused and said it was not his work to do this sort of thing. Ali Kasunka therefore went to a diviner with his sister Mbalasyao. The diviner said the semen was Mwanace's. He said that he had entered her hut magically and had sexual intercourse with her without her knowing it.[2] When Ali Kasunka got back to the village he called Mwanace and asked him what tricks he was playing in the village. Mwanace said that he had done nothing—it was not his village. Ali Kasunka then vaguely hinted at his crime. Mwanace pressed for more details and Ali Kasunka accused him outright of sleeping with his sister. He had hardly uttered the accusation before Mwanace had drawn a knife and attacked him. Mwanace was screaming something to the effect that Ali Kasunka had come to him with lies about having seen a diviner. Ali Kasunka beat off the attack and reiterated the accusation. Mwanace now turned his rage upon the woman and tried to catch her. Two of the men in the village then caught Mwanace and subdued

[1] Her mother, Amaliama, was dead.

[2] This is called *cigonecesya*. It combines the use of magic with sister-incest. [835] To the Yao mind there could be no clearer proof of sorcery. I have already mentioned the importance of sister-incest in relationship to the beliefs surrounding the sorority-group. See p. 146.

3: Stannus D-5 (ca. 1912) 1922 FT7 Yao FT7

The father of one of my servants helped to clear out the remains of a body from his grain store on one occasion and shortly afterwards, it is supposed that his own sons who had said they could not allow it to go on any longer, employed some one to kill him, as he was found, one day, with his head smashed in. There are, I believe, a number of similar cases known. 266

A person is supposed to gain the powers of *usawi* by procuring medicine from some one willing to sell his secrets at a price, and by performing certain rites usually connected with his method of bathing. It is said that "such and such a one takes his bath on the top of an ant hill" or "on the roof of his house by moonlight." The usual initiation into *usawi* is a long business, the individual being successively initiated into all the various practices of *ulwesa*, the supernatural. Medicines are made from a still-born child, from various plants, from the hyaena, etc., and used for preparing the individual in the new science. He is introduced to the hyaena, the fox, etc. It is also asserted that a man may acquire supernatural powers by having sexual intercourse with a near relative, a sister or mother. I have had pointed out to me an old man who is said to have wished thus to acquire power but the women refused and he has been a laughing-stock ever since. 754 575 [835]

On one occasion, a man related to me the pathetic life story of his attempt to find his favorite sister who, like himself, had been taken away to the coast as a slave. In desperation he has adopted the above procedure to try to gain supernatural powers to help him but without result. It would therefore seem to be a method not particularly associated with *usawi*.

The *mawi* is supposed to bring about the death of his victim not by administering poison or other such direct means, but by the more subtle mode of making medicine "against" him. When the victim has succumbed and is in due course buried, the *mawi* arrives at the grave to secure that for which he has been working. To the *mawi* is attributed the power of making himself invisible, and of taking the form of an animal; owing to the carrion-eating habits of the hyaena, this animal form is most commonly taken. Other animal forms which are associated with the *mawi* are the leopard, the fox, and the owl, all night-going animals. The Yao say, "The cry of the fox (jackal) is heard at night because he associates with *usawi* doings." 754 [825]

Arrived at the grave after sunset, the *mawi* blows his horn, the horn of a small antelope, to call his brethren; a fire with a blue flame is made by the grave and around it they dance, or the grave may be illuminated by blue flame without a visible fire. The *mawi* calls upon the deceased to rise from the grave, addressing him by the name he bore before he was initiated, i.e. his child-name. Obeying the summons, the dead man rises to the surface of the ground, though how he comes out is not quite clear — "the hole may be ever so small." The risen dead is then killed again by magic medicine and his body divided to be eaten by the congregation of *wasawi*. It is said that the skull is made into a gourd, the eyes are used as beads, and the ribs formed into a girdle. [266]

11: Sanderson D-5 (ca.1920) 1920 FT7 Yao FT7

The alternative term, *wesr*, common to nearly all Bantu languages, is usually 601
reserved for "own father," but not always.

Latterly, though the relationship is really *akwayo*, the husbands of a man's "daughters" or "grand-daughters" are called *atati*—in a complimentary sense, not of course in defining relationship.

The word *akwego* is rapidly falling into desuetude for men, and is, nowadays, never used in speaking to a man of that relationship, though used freely as a mode of address to women.

Amao (or *achikulu-wangu*, *-wao*, etc., "my, his mother") may be further defined as "great" or "little" in the same manner as *atati*.

The parents of any *atati* or *amao*, and those of one's wife are called *ambuje* ("grandparent"). Great-grandparents are specified as "father" or "mother of my grandfather (or mother)."

The founder of a family is called *Likolo*, especially in prayer—except for the [782]
augmentative prefix obviously the same word as *Nangolo*, "a parent," which includes all "fathers" and "mothers."

It is curious in this connection that a name for little girls in general, if one does not know their real name, is *chikolo*. All these words seem to be derived from *-kola* ("have," "possess"), and refer, probably, either to actual or potential possession of offspring.

Achinangolo are distinguished as "male" or "female" according as they belong to the father's or mother's side—irrespective of their own sex.

Conclusions.—The Yao nomenclature of relationships, bearing as it does the 601
evidence of former group marriages, is, like other classificatory systems, gradually 178
changing in conformity with the development of the race, so that it can be used [121]
to express consanguinity; Rivers has, I believe, called attention to this process.

The Yao custom—now dying out—of lending one's wife to a visitor (usually a [837]
close friend) may be a remnant of ideas carried on from communal marriage, though [514]
such a privilege is never given to a relative.

In the same way a man who has had no children (a great stigma) may request [837]
his friend to help him—he will never ask a relative—and all of the three parties will [840]
keep the secret of the true paternity of any children resulting.

In many tribes the marriage of brother and sister, or a man with his 588
sister's child, is permitted to compensate for the law by which a man's property 835
goes to the son of a stranger, but nothing of the kind is allowed among the Yaos. Indeed, they view any incestuous union with particular horror, and such must be very rare. I have heard of a case of a man committing incest with the idea that he would thereby become endued with supernatural [624]
power, but all he gained was ostracism; in the old days he would have been burned.

4: Stannus D-5 (ca. 1909)1910 FT7 Yao FT7 Maravi FR4

CIRCUMCISION AND INITIATION CEREMONIES.

Y 304 M [304] Circumcision was not practised among Anyanja. Among Amangoche, Machinga and Yao, the practice was known as *Inyago wa lupanda.*

Ku-umbala lupanda:—the prepuce was drawn forward and a nick made on the right side of the median line near the frenum. An application mixed with oil was applied. At the present time the Mohammedan practice is common *Ku-umbala jando*:—the prepuce is drawn forward through a split piece of bamboo and cut off with a sharp knife.

Circumcision is performed on boys usually at the age of nine to twelve years by a medicine man called *Ngalika*, an honourable calling, in a hut at the Inyago camp. Both patient and operator stand, unless the former is young, when he sits. The ceremony is witnessed only by the boy's friend. Among Mohammedans clitoridectomy used to be performed by a woman operator (*nakanga*), but, it is said, was discontinued, on account of the heavy mortality, about seven years ago. At the time of the operation a woman was given medicine to make her vomit all unlawful things she might have eaten.

Y 304 881 Initiation ceremonies (including circumcision) take place at irregular intervals. The chief or headman settles the date at which the Inyago shall be held, generally once a year in July, when there is no work and little else to do. Boys who are considered ready will then take part. The elder brother or a friend of a boy settles whether he is ready for circumcision. The mother then takes a present to the chief. The boys, their friends and the medicine man then depart for the bush, sometimes a couple of miles away from the village. The number may vary from three or four to as many as thirty or forty. In the bush grass huts (= *masan*) are erected for their shelter. Food is brought by the mothers and deposited a little way from the camp, and the friends who have accompanied the boys fetch and carry and act as sentinels to prevent approach of any "outsiders." Six months used to be spent in the bush, now four to eight weeks only, and all the circumcision wounds must be healed by the time of the candidates' return. If a boy die, the mother is not informed, she is allowed to bring food each day; at the end when the return is made rejoicing she is told by one of the men.

The exit from the village is accompanied by the friends dancing *Tsanji* or *Masewe*, the boys in old calico (formerly always in bark cloth) walk and sit down on arrival at the place appointed. The circumcision is performed the following day; Y [867] during the time which follows instruction is given them on their duties in after life as men, in good behaviour in their married life, *re* coitus, eating of food, superstitions regarding salt, etc. When this is all over a message is sent to the village, and the youths, walking quietly dressed in new cloths, are met half-way by the women and girls, who dance and sing; after the return to the village there is Y 551 drinking and dancing, the newly initiated refraining for one day. At the present 881 time the youth probably has some "friend" of the opposite sex with whom he sleeps; [836] until he has had coitus he may not eat food into which salt has been put. His

2: Mitchell E-5 (1946-1949) 1956 FT7 Yao FT7

culties are settled by the marriage sureties [1] who only report to him after the affair is settled. In disputes of unusual gravity, the headman may call in unrelated persons [2] to arbitrate, but he himself must be present. 622 692

His own behaviour is expected to be exemplary. Any deviation from the norm is likely to be strictly censured, not only by his own villagers, but also by other village headmen, who may say, 'Important men do not behave in this way.' A man who had an argument with his sister's son was told this. He had taken the dispute to a neighbouring headman who decided against the village headman and rebuked him for behaving in a way not consonant with his position. Village headmen should be above squabbling with their villagers. A village headman who was also a leech had virtually raped a woman whom he was treating. He tried to maintain this was part of the treatment. Her matrilineal relatives reported the matter to the headman of her village and he brought the errant headman in front of the chief who said, 'You are wrong to do this when you are an important man. You are a big man and you act as a commoner does. You ought to be able to show the commoners how to behave.' He was made to pay a compensation of £2 10*s*. and fined 10*s*. Had he been a commoner he would have been made to pay a compensation of only 30*s*. 622 577 558 684

The ultimate sanction to which all headmen are subject, is that their people will leave them if they behave badly. This was the fate of Cikumba. 622 558 837

In 1944 Cikumba had a village of about 30 huts. The son of the first Cikumba, Meya, had two wives who were living virilocally in Cikumba's village. Meya had enlisted in the army. While he was away, Cikumba, the village headman who was Meya's father's sister's son (though he called him 'father' because of positional succession), started taking Meya's two wives to beer drinks. Meya's sister one day asked Cikumba about his behaviour, but he only said that Meya could not do anything as he was far away. Things had gone too far, however, when one morning he was seen coming out of the 166

[1] The representative of a spouse in all affairs arising from conjugal relationships. They are usually senior matrilineal relatives. See Chap. VI, pp. 176–7. Their rôle is discussed fully in *Marriage among the Machinga Yao of Southern Nyasaland*.

[2] *Mundu juampambali*, i.e. a person from outside.

622 hut of one of Meya's wives. Meya's sister wrote a letter to tell him
558 of this and he replied that he could do nothing until he returned.
837 In 1946, Meya returned to be demobilized. The third night after his
166 return he questioned his wives about their fidelity during his absence. They at first held out against him but before long he intimidated them into admitting that they had slept with the village headman. Meya now went to complain to Mapata, who was Cikumba's perpetual mother's brother, and he said that he would come to the village the next day.

When Mapata came he confronted Cikumba with the accusation. Cikumba denied it until Mapata called the women. When they confessed Cikumba was forced to admit his guilt. Mapata now decided to call in an arbitrator, Isa, an important but unrelated headman who lived close at hand. Isa said he would come the following day when the matter could be thrashed out. When Isa and Mapata came they asked the women about the affair in public. They admitted the charge and Cikumba did not deny it. Isa then remonstrated with him for being a bad man and said that he was ashamed to hear about it. Cikumba had to pay £6 10s. to the injured man, Meya, who, however, refused to take it. He argued that Cikumba ought to have behaved as a father to him. But Cikumba had not. He, Meya, could not remain living in the village because his wives would be as Cikumba's wives. Isa said that he could not object because Cikumba had caused the trouble and had broken the village himself. How could he complain? Meya took two-thirds of the huts in the village away with him.

The Headman as a Representative of a Corporate Group

622 The headman is not only responsible for keeping the peace
689 between the members of his village, but he is also supposed to control his members in their relationships with other villages. If members take corporate action against other villages, even if they do so without the consent of the headman, the chief will consider the village headman responsible. This was brought out clearly in the relationships between Cikoja, Mapata and Masimbo in Chiwalo's section.

622 Cikoja and Mapata are two of the more important headmen in
689 Chiwalo's section. Masimbo is a minor village headman who lives
423 in Mapata's village area. The quarrel arose over the question of
226 fishing rights in a small pool lying between the two main villages. This pool was excavated by Cikoja and his villagers in 1924 during

2: Mitchell E-5 (1946-1949) 1956 FT7 Yao FT7

the significance of this formulation of his position is clear. It is when he shows partiality that the village under him is likely to break up. If he sides with his children his matrilineal kin are almost sure to move out; if he sides with his matrilineal kin, his children are likely either to return to their matrilineal village or, if they are adult, split off to set up a village of their own. The situation is precarious for the headman and it is very difficult for him to avoid a split in the village if he cannot keep the two opposed groups at peace.

My investigations show that few villages have contained patrilaterally-linked groups through the lives of two village headmen, unless these groups were descended from slaves. When the headman dies his successor assumes his name and social rôle. He also assumes the position of father towards the remaining children, who are in fact his cross-cousins. But his relationship towards them is not the same as that of father to children. The intimate link of the blood tie has been lost and the relationship becomes formalized. As more and more headmen succeed the genealogical link between the patrilaterally-linked groups and the dominant matrilineage becomes more and more remote, and the relationship becomes more and more casual. What usually happens is that shortly after the death of the headman and father, the patrilaterally-linked group takes exception to what the new headman does or says and moves off to found a village of its own. The case history I quoted earlier [1] brought this out clearly. The new headman had had intercourse with the wives of his 'son'. The son complained to the arbitrators in the dispute that 'he should have been as a father to me, and he is not'. The result was that the son refused compensation, and moved out of the village with his sisters to build on his own. When this happens the father-son relationship between the two villages is preserved and perpetuated, but the link is entirely formal and co-operation between them is limited to mutual attendance at funerals.

Patrilaterally-linked Groups as the Legacy of Slavery

Slave-groups in a village are usually linked patrilaterally to the dominant lineage. This is because the headman who was usually the captor of the slaves kept the women as concubines. They were given quasi-child status in the village, so that their children

[1] 'The Split of Cikumba Village', see Chap. V, p. 127.

3: Stannus D-5 (ca. 1912) 1922 FT7 Yao FT7

585 drum of her married life begins. The man and woman live together peaceably enough as
462 a rule, each attending to his own sphere of work. The man builds the house, the woman muds the floors, she sweeps and cooks, she is the hewer of wood and drawer of water. The man hunts, fishes, makes mats, baskets, the grain store, game traps, and bark-cloth; he looks after the tobacco, and makes the snuff, while his wife brews the beer. He it is who fashions the gourd vessels and carves the spoons, while the woman is the potter (Pl. III, 4) and pipe-maker. Together they hoe and together they harvest, but to the woman falls the monotonous drudgery of pounding and sifting the corn for flour.

842 The Yao have a custom like that of the Anyanja. A sister brings to the house of the
[522] newly wedded pair a log of green wood from a *mbanga* tree which is very hard; the log may be two feet in diameter and four feet long. Should the bride not become pregnant before it is burned away, the husband is laughed at and they may both be teased by having
[558] many logs brought to the house. A man who has no children is much despised and there is a saying, "He must have eaten some ground-nuts," punning on the word for a thick-skinned variety of ground-nut, *chimbuwila*, a word which also means sterility. An impotent
[837] man may, with the consent of his wife, introduce some male friend into the house, any children born in consequence being claimed as the husband's. He usually chooses some friend from a distance to obviate any attachment springing up between him and the wife. Two married couples may, all consenting, exchange consorts for the night, but they never live together like this for long periods.

582 There is one well-defined marriage taboo; a man may not marry a woman of his own clan. In the old days, he was also restricted to his own tribe, except in the case of slave
[611] wives and wives by capture. Since the clan is inherited from the mother,[1] a man may not marry the daughters of his maternal aunts, but he may marry his other female cousins.
[587] He may not marry two sisters nor a deceased wife's sister; neither do two brothers marry two sisters.

595 The number of wives is limited only by the husband's ability to provide for them. In addition to free wives, a man might formerly have a number of slave wives. The head wife is called *kusyeto*, the other wives, *mangumbu*. The word given by Macdonald, *akusyeto*,[2] meaning the junior wives, is a Chinyanja word and, I think, wrongly applied.

582 It has been said that a man always marries into the village of his wife. For this reason,
[842] female children are always prized as it means an increase in the number of able-bodied men added to the village. In rare cases, the wife might be taken to the husband's village,
[583] as is the Anyanja practice.[3] This, of course, is true in the case of chiefs and headmen. Here, we may also note that no payment is made for the wife and no dowry is received with her.

584 To revert to betrothal, occasionally the sponsors will not agree to the marriage and a
843 runaway match takes place, but in the end, the marriage is usually regularized by the sponsors coming to an agreement. If, however, the woman has in the meantime become

[1] Vide infra, p. 262. [2] Op. cit., p. 131. [3] Stannus, op. cit., p. 309.

4: Stahnus D-5 (ca. 1909)1910 FT7 Yao FT7
Moravi FR4

M 832 this is then added to a brew of new beer and given to her husband to drink. He will then think of and love only herself. This is said to have caused the death of some husbands.

Mpasi: medicine made and drunk by a woman to make her beloved by a certain man.

M 837 844 [847] At confinement a woman has to answer whether she has ever committed adultery; if she denies an adultery she may die, if she owns up and gives the name of the man this can be remedied. Adultery on the part of the father or mother is said to be a cause of abortion.

M 837 A man going away from his village for several months and leaving his wife behind and wishing her to remain faithful puts a knife into its sheath and hangs it in the hut, telling his brother. It is then believed that should anyone commit adultery with his wife separation after the coitus is impossible till some third party comes and pulls the knife from its sheath, and in doing so becomes a witness of the adultery.

M 833 [M 262] [825] [522] Eating of eggs is believed to cause impotence in children or adults. Much fat eaten is said to have the same effect. It is believed that if a hare run up against the leg of a man while going through the forest he will become impotent. It is for this reason that dung of the hare is put at the door of a man to make fun of him as impotent. This is a trick played by *Adsukulu*.

M Y 837 263 753 If a woman who has committed adultery puts salt into the food while cooking, of which her husband will partake, will thereby cause his death. At the present time among the Yao-Mañanja community a woman always calls one of the children to do it—this speaks for itself. A woman, after connection with her husband, putting salt in food, may cause illness among any children partaking of the food.

M 837 If a man accuse his wife of adultery and she denies it, he will procure medicine and place it under her pillow, then in the middle of the night she will wake her husband and tell him the name of her lover.

M 787 777 *Mpingu* = ill omen. A journey would always be stopped if on setting out one of the party die; or should they meet an ant-eater or black snake. It used to be considered a sign of bad luck if one of them knocked the toes against a stone; now if blood flows from the big toe they say it presages good luck.

Y 832 826 The Yao at the age of sixteen years climbs the *mtawke* tree, and finding a fruit which is soft makes a hole in the middle and inserts the penis. After this procedure the penis is said to enlarge as the fruit grows; when the size desired is reached the fruit is cut down.

M 827 The native says that every one has a small animal inside the ear, the sounds it makes causes the man to hear. If the animal escapes the man becomes deaf. The animal is said to be ½-inch long, and wax is said to be its excrement.

M 484 777 Where a man rests on a journey he often puts a stone in the fork of the nearest tree; on many journeys there are regular halting places, often at cross roads, and here every passer-by adds a stone for luck, making quite big heaps.

ndembo, a woman who is pregnant for the first time;[1] *kawembere*, a woman who has one or two children; *mjembere*, a woman who has three or four children, and lastly, *ndabwe*, a woman who is past child-bearing age.

The information which I have been able to collect on abortifacients and contraceptives suggests that they are not used by married people merely to prevent their having more children, but that they are used by people who wish to avoid pregnancies which would be embarrassing, for example, by a woman whose husband is a labour migrant. To what extent the abortifacients and contraceptives are efficacious I cannot say; some, I know for certain, rely on a magical principle, for example, the medicated cord worn by a man during intercourse. On the other hand, the abortifacients taken orally may have some active ingredient.

A barren woman or an impotent man is regarded with some embarrassment and the marriage sureties (*arisamangwe*) of a childless couple will go to considerable trouble and expense consulting diviners and leeches in an attempt to make their wards productive. Childless couples are regarded as not fully adult and are treated in a patronizing way by those who have borne children. Since a man may marry other wives, barrenness in a woman is a cause of sorrow to her husband, but is not in itself a ground for divorce. Where the man is impotent, however, the woman may divorce him on this ground, though she usually takes a paramour and forces her husband to an action for damages which automatically leads to a divorce because it is the usual practice in these cases for the court to ask the woman if she wants to be divorced from her husband.

In contrast to the satisfaction shown at the birth of a child is the sense of awe evinced when a child is still-born or the woman miscarries. The Yao do not distinguish between still-births and abortions, both events being known by the word *kwasanga*. This is a verb and refers to the process of abortion; there is no term for the dead foetus itself. I made no attempt to enumerate miscarriages and still-births because they are supposed to be due to breaches of sexual taboos on the part of the husband and wife, and interviewees were naturally reluctant to mention them. Miscarriages and still-births are greatly feared, and the woman is considered to be in a very dangerous condition until she and her husband have carried out a ritual purification. Should a man have intercourse with a woman who has miscarried and not yet been purified he will contract a disease called *kwaso* which is believed to be invariably fatal. Still-born children or aborted foetuses are buried in a hole dug with sharpened sticks in the bush by the women, whereas children who are born alive and die afterwards are buried in the graveyard in graves dug by men with hoes. The burial spots of still-born babies or aborted foetuses are marked with a stone or broken pottery, since it is believed that to step on them will induce an illness.

The concern of the interested kin-groups is shown in the child-birth procedure. Birth normally takes place in a hut in the presence of the older female relatives of the woman and the female representatives of the man. The husband's representatives are necessary because the Yao, like many other Central African peoples, believe that an adulterine child will not be born to the woman unless she confesses (*kapwa*) the name of the genitor. If she persists in concealing the identity of the genitor, they

[1] *ndembo* = elephant, hence ivory. The terms *ndembo* and *ndembo* here both refer to the ivory bangles traditionally worn by the woman in the pregnancy initiation ceremony.

11: Sanderson D-5 (ca. 1920) 1920 FT7 Yao FT7

The alternative term, *ooe*, common to nearly all Bantu languages, is usually reserved for "own father," but not always. 601

Latterly, though the relationship is really *ahwaye*, the husbands of a man's "daughters" or "grand-daughters" are called *atati* —in a complimentary sense, not of course in defining relationship.

The word *ahwaye* is rapidly falling into desuetude for men, and is, nowadays, never used in speaking to a man of that relationship, though used freely as a mode of address to women.

Amao (or *achikulu-wangu*, *-wao*, etc., "my, his mother") may be further defined as "great" or "little" in the same manner as *atati*.

The parents of any *atati* or *amao*, and those of one's wife are called *ambuje* ("grandparent"). Great-grandparents are specified as "father" or "mother of my grandfather (or mother)."

The founder of a family is called *Likolo*, especially in prayer—except for the augmentative prefix obviously the same word as *Nyapolo*," a parent," which includes all "fathers" and "mothers." [180]

It is curious in this connection that a name for little girls in general, if one does not know their real name, is *chikolo*. All these words seem to be derived from *-kola* ("have," "possess"), and refer, probably, either to actual or potential possession of offspring.

Achiwanpolo are distinguished as "male" or "female" according as they belong to the father's or mother's side—irrespective of their own sex.

Conclusions.—The Yao nomenclature of relationships, bearing as it does the evidence of former group marriages, is, like other classificatory systems, gradually changing in conformity with the development of the race, so that it can be used to express consanguinity; Rivers has, I believe, called attention to this process. 601 198 [12]

The Yao custom—now dying out—of lending one's wife to a visitor (usually a close friend) may be a remnant of ideas carried on from communal marriage, though such a privilege is never given to a relative. [834] [514]

In the same way a man who has had no children (a great stigma) may request his friend to help him—he will never ask a relative—and all of the three parties will keep the secret of the true paternity of any children resulting. [837] [809]

In many tribes the marriage of brother and sister, or a man with his sister's child, is permitted to compensate for the law by which a man's property goes to the son of a stranger, but nothing of the kind is allowed among the Yaos. Indeed, they view any incestuous union with particular horror, and such must be very rare. I have heard of a case of a man committing incest with the idea that he would thereby become endued with supernatural power, but all he gained was ostracism; in the old days he would have been burned. 588 835 [24]

1: Tew E-4 (no date) 1950 FT7 Yao FT7

cipata yearly in the great initiation festival for boys and girls. Consequently as they repeat each year the lessons of their own initiation, the ceremonies are the main vehicle of Yao culture.[1]

There are also two Moslem ceremonies:

(1) *Jando*, the boys' Moslem baptism, which takes about seven days, and is usually worked in with *lupanda*:

(2) *Nsondo*, the girls' Moslem baptism, which is the same as *jando*, but usually quite separate from *cipata*. It is important that the wife of a Moslem should have her *nsondo* so that she knows how to prepare the food properly at Ramadan.

Menstrual and Other Taboos

Menstruation is held to be dangerous. A special mat is used by the woman during this time, and is rolled up and kept during the rest of the cycle. The hut is completely replastered after menstruation. Intercourse during menses leads to disease of the man. Sexual contact is dangerous to persons at certain other periods: during initiation ceremonies, during mourning, and for babies who have not been through the protective rite. The danger is thought to lie in *ndaka*, a dread disease characterized by swelling. This may be transmitted by salt in the food. Deaths are often attributed to 'salt'. Much of the significance of the mourning is that medicines are prepared which protect the mourners against the dangers attendant on sexual activity.

Burial Rites

News of a death must be sent to the chief by a messenger carrying a single fowl. The chief gives a present of calico for wrapping the body, and a goat for the burial men. These are called *asuilo*, neighbours unrelated to the dead, who volunteer for certain duties. They prepare the body for burial and carry it in procession to the graveyard outside the village. No uninitiated person is allowed to see the funeral. All who attend the burial are prohibited from sexual intercourse for one month. After this time the prohibition is lifted by a ceremony of beer drinking and feasting, and on the following day all fires in the village are extinguished, and then relit, and the mourners are shaved. A year later beer is brewed for a final ceremony.

For a period after her husband's death a widow is unclean, and has to be purified by ritual intercourse with a man who is paid. The widow is not allowed to remarry for two or three years. A widower leaves his wife's village, after receiving a parting gift. The widows of ordinary persons are not inherited. If a man has himself a 'name' (rank and social position), he has an heir, who inherits also the wives of his predecessor. But if the heir (the maternal nephew) has married a cross-cousin (mother's brother's daughter) he would not consider the wife's mother as his inherited wife.

Before the burial the dead man's hut used to be destroyed, together with his possessions. Immediately afterwards a consultation is held as to whether retaliatory action against sorcerers is called for. The *asuilo*'s duties include not only the conducting of the burial, but also the subsequent inquiry and the conduct of the second ceremony, the beer drinking, at which they shave the mourners. A man who has

[1] Main sources for girls' initiation: Henkel, 1935, p. 19; Stannus, 1, 1910, pp. 189–7; 4, 1910, pp. 269–70; Stannus and Davey, 1913; Duff, 1903, pp. 312–15; Abdullah, 1919, pp. 16–17; Macdonald, 1882, vol. i, pp. 129–30; Werner, 1906, pp. 126–7; Johnston, 1897, p. 420.

3:Stanzas D-5 (ca. 1912) 1922 FT7 Yao FT7

584 betrothed. In this latter case, the child lives with one of his wives and is brought up in his house.

881 When this girl first menstruates, she tells the man's wife who in turn informs her husband. He then goes out into the bush with his axe, while the wife reports to the young girl's mother and to the man's female relatives. The girl is put to rest on a mat in the hut, the women remaining with her after shutting and fastening the door. The man, meantime, cuts a strip of bark, hammers it out into a piece of cloth, and puts the cloth, wound round and round the stem of the tree from which he has taken it, on the roof of the hut where the girl lies. The first passer-by who notices this sign, spreads the news; then all the women in the village assemble and trill with their tongues to show their joy, while the women in the house sing.

Until the girl's menstrual period is over, the old women relatives sleep each night in her hut, and instruct her in the taboos relating to menstruation. The front door is kept closed, and exit for purposes of nature is made only through the back door. When the girl is up again, the fire in the hut is extinguished, the bark-cloth which she has worn and her sleeping mat are rolled up and put away in the veranda-room, and the girl, having procured clay, replasters the floor of the entire hut. A woman then brings fresh fire from another hut.

●841 At subsequent menstrual periods, there is no ceremony. The girl, as is the custom of all women at such times, must sleep on a mat apart from her husband. Sexual intercourse is strictly forbidden under penalty of dire sickness. For the same reason, no menstruating woman may put salt in the food, etc. Until the girl's first menstrual period is over, the man to whom she is betrothed stays in the hut of another wife. Later, he may cohabit with the girl.

881 833 If the girl has not been to her initiation ceremony, *Chipalu*,[1] on returning to her husband's hut after this ceremony, the first coitus takes place in the veranda. It must be incomplete, so that ejaculation takes place after withdrawal and the semen falls upon her cloth. This should be taken by the girl to some of the old women in the village who report on the proceedings. Should withdrawal not have taken place, the man is considered bad and the girl, unless doctored, may sicken. Later, ordinary cohabitation is allowed. This species of ceremonial coitus is called *Kwaza mauta* or in Chinyanja, *Ku-tapa mafuta*, "to roll away the oil," referring to the oil with which the girl was anointed at *Chipalu*. A girl who has no betrothed, on returning from *Chipalu* to her grandmother is given medicine similarly to prevent her sickening.

584 *Betrothal and marriage in adult life.* Apart from child betrothal, when a man seeking a wife, sees a girl he fancies, he talks the matter over with his brother, uncle, or some friend, who then goes and makes overtures to the girl's uncle or brother, her guardian or sponsor[2] as he is called. The sponsor corresponds very closely to our idea of a god-parent; he may be called the sponsor. The word "surety" is used by Macdonald.[3]

[1] Vide index, p. 388. [2] *Sponsor* is a word adopted from the Chin. *Nkaum*.
[3] Macdonald, op. cit., vol. i, p. 118.

3:Stanzus D-5 (ca. 1912) 1922 FT7 Yao FT7

30 that she is tattooed more profusely on the buttocks and legs. The cholet of beads was
[548] formerly made like *mapunda* with a bark-cloth cove, called *ubwale* or *ubule* (*bu-wule*, to slip off), referring to the *ubule* being slipped off over the legs. The fashion now is to wear single strings of beads; each string is of one color but all the strings are different and perhaps number a dozen or more.

Lipamba: a bead belt three-inches wide, worn by Yao women near Lake Nyasa. A bead apron, *kiejera*, is also worn by them but not near Zombe (Pl. VI, fig. 2).

[783] A woman removes her beads when she is "unclean," that is: (a) during the menstrual period, (b) during the period of mourning for a near relative when coitus is forbidden, (c) before the birth of a child and afterwards until such time as she may resume intercourse with her husband.

A large variety of beads has long been used by the Yao. There are some rarely seen
[172] now which were much prized in years gone by, while others are of quite recent introduction. There is no evidence that they themselves made beads and there are few which are probably not of European manufacture.

291 Clothing. The Yao used bark-cloth before the introduction of woven materials. The older people may still be seen in it and it is used in most of the ceremonies. At one time, they also used to weave a cloth called *likomambo* from a native cotton plant. This has been given up since the introduction of imported materials.

For the method of wearing cloth, see Pl. II, fig. 2. The very poorest people wear only a strip of calico round the pudenda, held in position by a string round the waist hanging long behind and in front; this is called *ulitetke*. Yao women, when menstruating, wear
[841] under this a little piece of cloth called *likumbi*; it is only worn at this time and not always as in certain other tribes.

721 Warfare. Fighting has naturally played a large part in the life of the Yao as among other African tribes, but at no time were these people a trained fighting race. Warfare was of a desultory character consisting mostly of raids by one feudal chief upon another. A party of men belonging to a chief at enmity with another, meeting some of his followers would challenge them, "*Ahumbe*, who are you for?" The name of the rival chief in answer was the sign for battle to begin. A false answer would never be given to gain an advantage.
726 When about to throw a spear, the thrower calls to his adversary.

The Yao have possessed guns for a long time. Going out to fight, the Yao used to
[177] leap from one foot to the other, and spin their guns around in their hands. They made their own stocks for the rifles. They also used to make a small, cast-iron cannon about three feet long, called *kambale*, "a little nose." It was carried in the arms and was touched
[534] off by a torch. Drums called *ngoje* were taken into battle. There is an old war drum at Malemya's village, taken in 1895 by the old Malemya from a *Mang'anja* chief called Mkulumbo who lived near Lake Chiuta. Since then, this drum has always gone into battle with Malemya. Around it his men would dance and anyone who had killed a man in battle would run up to it and spit upon it in salutation.

4: Stannus D-5 (ca. 1909) 1910 FT7 Yao FT7
Ngoni FR5
Maravi FR4

Women wear their cloth folded across the upper level of the breasts from right to left. Men and women often have two cloths, one over the loins, only the second fastening over the chest. M Y N 291

A menstruating woman also wears a small piece of calico corresponding to a diaper supported by string round the waist.[1] The same thing is worn after child-birth for six months. Angoni women always wear them. M Y N [241] [246]

The Angoni, Chipeta wear their cloth toga-fashion, carrying a fold of cloth on the left arm. An Angoni chief wears three such, blue, white and coloured, the first outside, the last next to the skin.

The material used is now practically everywhere European-made calico, formerly bark cloth only was used by Nyanja, though weaving had been accomplished by Angoni, where skins were and are used as articles of clothing. M Y N [246]

There is nothing to distinguish men of various grades, etc. Fashion at the present time is very capricious—some patterned cloth being much worn one month will have no sale a month later; this is true both of men and of women.

There is no class uniform, and no "costumes" are worn save in dancing (*q.v.*).

Men are now seen wearing a piece of calico twisted up on the head in turban form, a custom lately introduced from the coast—the only indigenous head-gear is the string skull-cap worn by Angoni widows. N [589]

Under the heading of dress must be included the bead aprons worn by Yao and Angoni. Among the former the use of this garment is restricted to the women, who in the house sometimes wear nothing else; among the Angoni the children often have them and no other clothing.

Sandals are sometimes made of skin and fastened on the foot with a thong when crossing thorny country.

Among Angoni the *mwado* only used to be worn; this is a small hard-cased fruit which was hollowed out and worn just covering the glans penis. N 291 [24]

FOOD, ETC.

The staple food throughout the country is either maize or rice, the latter only at various spots on the lake shore where it can be grown. Two fixed meals per diem are taken, at 9 or 10 a.m. and again at 6 p.m.; each consists of *nsima* porridge made from maize flour or rice flour or boiled rice with some *ndiwo* (relish) to which the salt is added. At odd times the native will eat anything that opportunity offers—a piece of cassava root, a boiled sweet potato, a roasted maize cob, etc. M Y 262 [264]

The *nsima* is made by stirring flour (*ufa*) into boiling water till a stiff paste is formed; this is kept cooking for five minutes and then scraped out with a wooden M Y 252

[1] Diaper *m mikate*; a woman keeps five or six; they are never put away in baskets but always hung up; a woman changes every time she bathes, using two or three per diem; they may be given to a female child to wear, but are then not worn again by a woman.

2: Mitchell E-5 (1946-1949) 1956 FT7 Yao FT7

613 he cannot escape the fact that in his wife's village he is only
593 a 'billy goat' and that his 'true home' is in his matrilineal
606 village. The pull of the matrilineal village on him, therefore,
591 is always very strong and he is constantly trying to return there.
621 His wife's responsible relatives are constantly trying to avoid this because they know that in time they are likely to lose the children who will probably settle in their father's village if they grow up there. In general, therefore, a husband must have a very good reason before he can get his wife's kinsmen's permission to take her and her children to his village. His wife's relatives do not easily yield. But a headman must live in his own village so that nearly all headmen bring at least one of their wives into their villages. Other men sometimes succeed in doing so especially if their wives are past child-bearing, but it is typically the headman's wife who lives virilocally.

621 The husband's interest in returning to his matrilineal village
591 is heightened by the fact that a man in his wife's village is looked
554 upon as the typical man without prestige: a stranger, whose duty is largely procreative. The theme song at the installation ceremony where the husband was compared with a billy goat, and the common epithet 'chicken rooster' for a husband, reflect the attitude of the Yao towards him. In the song I quoted, the husband was said to be unable to climb high in his village of marriage, however rich he may become.[1] He is, nevertheless, an essential member of the village and the Yao say that it can succeed neither economically nor physically without his aid.

A husband becomes more important when he stays in a village for a long time. He becomes known intimately to the villagers and is conversant with their affairs. He is, therefore, able to advise on many private intra-lineage and intra-village affairs and may even become a marriage surety if there is no more suitable person available. Also in time the husband's position in the village changes. As his children grow up and become active members in the matrilineage, his position of husband becomes supplanted by his position of father, which, in a matrilineal society like that of the Yao, is significant in the same way as that of the mother's brother is in patrilineal societies.

593 The Yao recognize the close bond between father and child.
842 This bond is conceived to be both social and physical and is

[1] See Chap. V, p. 119.

2: Mitchell E-5 (1946-1949) 1956 FT7 Yao FT7

rationalized in the Yao theory of conception.[1] They believe 593
that after intercourse the semen clots and embeds itself in the
womb. From this the child develops and is nurtured by the 842
mother until it is due to be born. Subsequent acts of intercourse add semen to the body of the child and make it fat. Semen from other men may be used, too, to feed the child in its intra-uterine life, but its body and blood are derived from the semen which first clotted. In Yao opinion there can be one father only.

Not all acts of intercourse lead to impregnation because some- 593
times, for various reasons, especially in immature women, the
semen fails to clot. There is therefore, to the Yao way of think- 842
ing, some difficulty in determining the 'father' of a child. This 845
difficulty is met by the belief that the intra-uterine child in some 848
way knows about the doings of its parents and in particular knows who its father is. It therefore refuses to be born unless its father is recognized.[2] Hence if a child is born without undue puerperal complications it is assumed to be the offspring of the man who is currently living with its mother. If labour is prolonged, however, the relatives call for confessions (*kupaca*) from both husband and wife. The husband's confessions are usually formal and simple. The wife's confessions on the other hand are detailed and complete. She confesses the name of an adulterer, and her midwives, including the husband's sisters as his witnesses, wait for the next birth-spasm. If the child is not born at this spasm she is told to confess again. Only after she has confessed to a lover whom the Yao assume to be the genitor will the child eventually be born. After this the aggrieved husband summons the adulterer to court and he is made to accept the fatherhood of the child.

The act of formally accepting the paternity of a child, which 593
is also done when a woman has a child out of wedlock, confers [848]
rights of two types on the child. The first set of rights is directly economic and physical. The father is expected to give the mother salt, money for relish, and cloth to help her rear the child. But
this side of a father's duties to his child ceases as soon as another 593
man marries the woman. The new husband than takes over the 586

[1] I have dealt with this more fully in *Marriage among the Machinga Yao.*

[2] It also refuses to be born for other reasons, but the first considered is always the adultery of its parents. See p. 138.

3: Stannus D-5 (ca. 1912) 1922 FT7 Yao FT7

585 drum of her married life begins. The man and woman live together peaceably enough as a rule, each attending to his own sphere of work. The man builds the house, the woman
462 mude the floors; she sweeps and cooks, she is the hewer of wood and drawer of water. The man hunts, fishes, makes mats, baskets, the grain store, game traps, and bark-cloth; he looks after the tobacco, and makes the snuff, while his wife brews the beer. He it is who fashions the gourd vessels and carves the spoons, while the woman is the potter (Pl. III, 4) and pipe-maker. Together they hoe and together they harvest, but to the woman falls the monotonous drudgery of pounding and sifting the corn for flour.

842 The Yao have a custom like that of the Anyanja. A sister brings to the house of the newly wedded pair a log of green wood from a *mbanga* tree which is very hard; the log
[522] may be two feet in diameter and four feet long. Should the bride not become pregnant before it is burned away, the husband is laughed at and they may both be teased by having
[558] many logs brought to the house. A man who has no children is much despised and there is a saying, "He must have eaten some ground-nuts," punning on the word for a thick-skinned variety of ground-nut, *chimbuwila*, a word which also means sterility. An impotent
[837] man may, with the consent of his wife, introduce some male friend into the house, any children born in consequence being claimed as the husband's. He usually chooses some friend from a distance to obviate any attachment springing up between him and the wife. Two married couples may, all consenting, exchange consorts for the night, but they never live together like this for long periods.

582 There is one well-defined marriage taboo; a man may not marry a woman of his own clan. In the old days, he was also restricted to his own tribe, except in the case of slave
[611] wives and wives by capture. Since the clan is inherited from the mother,[1] a man may not marry the daughters of his maternal aunts, but he may marry his other female cousins.
[587] He may not marry two sisters nor a deceased wife's sister; neither do two brothers marry two sisters.

595 The number of wives is limited only by the husband's ability to provide for them. In addition to free wives, a man might formerly have a number of slave wives. The head wife is called *kusyeto*, the other wives, *mangumba*. The word given by Macdonald, *akusyeto*,[2] meaning the junior wives, is a Chinyanja word and, I think, wrongly applied.

582 It has been said that a man always marries into the village of his wife. For this reason,
[942] female children are always prized as it means an increase in the number of able-bodied men added to the village. In rare cases, the wife might be taken to the husband's village,
[583] as is the Anyanja practice.[3] This, of course, is true in the case of chiefs and headmen. Here, we may also note that no payment is made for the wife and no dowry is received with her.

584 To revert to betrothal, occasionally the sponsors will not agree to the marriage and a runaway match takes place, but in the end, the marriage is usually regularised by the
843 sponsors coming to an agreement. If, however, the woman has in the meantime become

[1] Vide infra, p. 292. [2] Op. cit., p. 134. [3] Stannus, op. cit., p. 309.

843 *Pregnancy and childbirth.* An event of the first importance in the Yao world is the
842 first conception or rather the "quickening" with the first child, *Lítiwe*; this is described below, together with the other ceremonies of the *Unyago*.[1] After the ceremony of *Lítiwe*, the period of waiting until the birth of the child passes without further event. A point of medical interest is that native women suffer in many cases from "morning sickness" during pregnancy. That they may have perverted appetites is also recognised, grain husks
[171] and crabs being among the things most commonly desired. As the Anyanja,[2] the Yao believe that the child develops from the semen of the male, although the growth of the child is in some way connected with the mother.

844 When labor commences, the woman retires to the bush a few hundred yards away from her house, attended by some friend, seldom a midwife, and never by her own people, though the mother and the mother-in-law will probably be near the spot. If labor is not completed by evening, they return to the house and the birth may take place actually within its walls.
[171] The attitude assumed in labor is the same as that adopted by the Anyanja,[3] the patient semi-reclining in the arms of another woman who sits behind, grasping her belly. The vulva is smeared with a decoction made from the bark of the *mpoza* tree as a lubricant, but no other help is given. *Kumkuli* is the name given to the place of confinement; *m'huli* means the house where the woman remains for a period after the confinement. The Yao recognise the protruding bag of amniotic fluid and call it the "oil-gourd". *"Chisasi chikusichel* (The oil-gourd, has it broken?)." They wait until the placenta is delivered before dividing the cord. This is done with the sharp edge of the outer covering of a maize stalk or sugar cane; a knife is never used. The section is made near the placenta or half-way between it and the child, after tying the proximal end with a bark string.

The woman who receives the child at birth is the *ambusanga*, friend or godmother. If the infant is born in the bush, she carries it back to the house whither they go as soon as labor is completed. The mother herself, unless she is very ill, goes out shortly afterwards and buries the placenta in the ash-heap, using a stick to dig the hole, never a hoe.

845 After the birth, the mother and child must remain in the house until the umbilical cord separates, during which time the husband does not enter, though he may come to the door to look in at the child.

The day on which exit from the house is made, the floor is entirely replastered with mud.
[852 The baby's head is shaved and a cross is made upon it with *ngama*, a kind of red pigment.
553 The husband may then receive the child and in the case of a first-born, it is he who gives it
302] its name; other children may be named by the *ambusanga*, the mother, or the aunt.

When the mother leaves the house to appear in public, the *nakunga* who put her *litiwe* on,[4] removes it.

So long as the infant remains in the house, care must be taken as to persons allowed to handle it. A woman who has recently had a menstrual period or coitus with her husband,

[1] Vide infra, p. 274. [2] Stannus, op. cit., p. 310. [3] Ibid. [4] Vide infra, p. 274.

3: Stanmus D-5 (ca. 1912) 1922 FT7 Yao FT7

881 The following morning at dawn, each guardian washes her ward, anoints her from head to foot with oil and puts on her body new calico, ropes of beads being worn round the neck, and on the head a little bark-cloth cap fringed with beads called *chiwala*. At a given signal, each guardian picks up her ward on her shoulders and pretends to run away with her to her own village. This is the signal for the fathers of the girls to run up and redeem their children by making presents to the guardians. Each *uwali* is given her new name by her guardian, often the guardian's own or that of the girl's grandmother. The girls are then set down again, a procession is formed and all return to the village, with great rejoicing, as in the case of the boys. The girls then disperse and go back to live with their mothers or grandmothers. The *uali* may be made to give an exhibition of their dancing; they dance *chawba*.

On the occasion of the first visit to *Chiputu*, as a kind of accessory, there is a ceremony for young married men which forms, as mentioned elsewhere, the second part of their initiation ceremonies or *Unyago*.

It is known as *Kulukwi* and is a kind of test of manhood. It was formerly considered as important as *Lupanda*, but now, I think, the last *Kulukwi* has been performed; for the young men of the present day, largely emancipated from chief-rule and freed from the ties of tribal custom, care less and less for their old method of up-bringing.

881 When *Chiputu* is about to take place, any young newly married men whose wives have not become pregnant are pressed to go to their second ceremony. The wife may ask some
●842 woman friend to act as his guardian or some woman may volunteer for the service. Often the young fellow will make pretence of not wanting to go; he may be chased and caught, and with his hands tied behind his back, wearing bark-cloth, he is conducted to the ceremony by other men.

Each young man is attended by a woman guardian and during the first visit to *Chiputu*, they sleep in two rows of grass sheds facing each other, the women in one line, the young men in the other line, each facing his woman guardian, with fires in the free-way between the two rows of huts. Or they may sleep in one big grass shed, each woman-guardian next to the young man she attends, and so in pairs all down both sides of the grass shed, the fires being made in the middle. The young men have to pay for a share in the food and beer made for *Chiputu*, but each guardian cooks for her man.

On the afternoon of *lyawa lya kuzyanga*, the young men are taken off to a place in the bush perhaps a quarter to one mile away from *Chiputu*, *ku-lukwi* "to *lukwi*" as is said.

Here they are formed into a semi-circle of from half a dozen to ten or twenty of them, each with his guardian and a crowd of the grown-up population from the village in attendance. Good advice is given them as to their behavior, especially in regard to their wives and mothers-in-law. Anyone who has any particularly bad trait is sure to hear of it now, the mother or father of the young man having arranged that it shall be brought up. The

woman guardian shows to her man red and white beads in her hand and tells him that white indicates health while red means sickness, thereby pointing out to him their deep-rooted beliefs in the diseases associated with intercourse or association with women during menstruation. 881 842

Then follows a test of manhood. The women guardians put little pieces of stick (*lukwi* = sticks or firewood) on their heads and sing: [533 539]

"*Ngempe* *mkwengu* *lukwi lwa* *mauku'chamuno lini!*"
"I must give my wife (when sick) firewood of the *mauku* although it gives lots of ashes!"

What is meant is that when his wife is ill, the husband should fetch the firewood even though he does not know which woods give least ash; the *mauku* tree gives many ashes. The little piece of wood a few inches long with a notch in the middle is then handed to the young man by his guardian. He places it on the ground in front of him, kneels down, and with a small axe he attempts to divide the stick at the notch. If he is successful, he is greeted with cheers, clapping, and much rejoicing. By proving his power to hit straight, he has also established his manhood; it is prophesied that he will soon have children. Should he miss through nervousness, shouts of derision welcome him and his guardian shows her disgust with his performance. If he is a young fellow well-liked in his village, he may be allowed to make a second attempt. After this ceremony, each couple bathes each other in their shelters by pouring water over the head and body without removing the clothes, thus making brotherhood. Forever after the man must treat this woman with great respect, must not address her for some time, and then only after making her a small present.

The woman guardian picks up the two pieces of the broken *lukwi* and on the morning before they all leave *Chiputu*, the mother or sister of the young man gives her a string of red or white beads saying, "These are to bind up the bundle of wood." The man's guardian binds up the pieces of wood with the beads and gives it to her man. When they have returned to the village, they go to the young man's wife and he presents them to her. The guardian, however, steps in and slips off the beads which she keeps, while the wife, pleased at her husband's success, drops the two pieces of wood into the fire.

During the weeks that the girl *usili* remain under instruction in the village, those young men who have been *ku-lukwi* sleep in one big enclosure away from their wives and do not cohabit until after the second return from *Chiputu* is made.

Another *ku-lukwi* test sometimes, I believe, introduced into Yao ceremonies but really one practiced by the Mpotola people and not proper to the Yao, is as follows: [177]

The guardian lies on the ground, wearing a small loin-cloth, and holding beads in her clenched hands, red in one, white in the other. Her man standing at her feet, bends over her and projects saliva on to her abdomen through a rolled up leaf held between his lips, at the same time choosing one of her hands. If he chooses the hand containing the white beads, he is hailed with delight as a man indeed, but should he choose the hand containing

3: Stannus D-5 (ca. 1912) 1922 FT7 Yao FT7

881 the red beads, he is jeered at and laughed to scorn. In this case, the white beads are held to
842 indicate semen, the red beads menstrual blood.

843 *Litiwe:* This ceremony is enacted at the time when a young married woman quickens with her first child. *Litiwe* (*ku-tiwa*, to plait) refers to the plaited cord put round the woman's neck. The woman and her husband both are present, and in addition, only women, possibly with their babies.

For the man, *Litiwe* is looked upon as the third or completing ceremony of his *Unyago*. He must have been to *Lupanda* and *Chiputu*, otherwise he cannot be admitted to *Litiwe*. If, however, the husband is not eligible, some other man who has completed his *Unyago*, is married, and has children, may act as proxy to a woman at *Litiwe*.

In every district there is generally some woman who arranges and conducts the ceremony. She is called *nakanga;* naturally, no European has been present at *Litiwe* but my in-
[115] formation was gained from Kuliati, a woman who for years acted as *nakanga* in the villages round Malemya's kraal, and Chilandana, her old mother who had acted in the same capacity before her and who had come from the old Machinga country where her mother in turn had been a well-known *nakanga*.

When a woman quickens with child for the first time, her women-folk visit the local *nakanga*, saying, "We are going to shave so and so (naming the woman) and to get bananas. Tomorrow, we start pounding flour. In three days we shall be ready, and you will come over to arrange things." At the appointed time, the *nakanga* having partaken of food early because she will not eat for the rest of the day, goes out of the village to some spot a half-mile away in the bush and there sees that all preparations are made and sufficient food collected. The food is supplied by the mothers of the man and woman, and consists essentially of beans (*njama* and *njunde*), porridge, sugar-cane, and bananas, but no beer.

All being ready, a procession in single file leaves the village for the appointed place, the woman's sponsor leading, the woman followed by the husband and his sponsor (a woman), and the married women assembled from nearby villages. The sponsor is known as *mkamusi* or *alombwe*. Neither *mkamusi* nor *nakanga* may have sexual relations with their husbands till after the birth of the child. The woman wears bark-cloth stained black, but may wear blue cloth on returning to the village, while her husband is decked out in his finest cloths and ornaments. They have partaken of food early in the day as they fast until the next day.

Arrived at the place, the man and woman take up their positions on mats separated from each other by some twenty or thirty paces, each with his *mkamusi*. The man's *mkamusi* sits on the same mat with him and never leaves him throughout the ceremony. The woman preserves a dignified quiet but the man is expected to make the most of himself sitting with hands on hips, and displaying his fine clothes worn after the fashion of a chief.

While all the assembled crowd of women sit round in a semi-circle, the *nakanga* commences the proceedings, singing a number of songs to the woman and the man in turn,

539 20. *Wawilile galasaya mbasi!*
He was "let in" badly over the fish-sticks!

A man had put a lot of fish on spits to roast round the fire. While he went to get some more firewood, a thief came and took all the fish. A stranger then approached and was examining one of the sticks, saying, "There must have been a very nice fat fish on this stick," when the owner returned and immediately accused the innocent stranger of stealing his fish. A native coming across a corpse will run away, using the above expression; for if he reports the matter, he may be the first to be accused.

21. *Sungula wa wolechele (mwanache) mu uwile!*
The impotent man had born to him a child in a joke!

[842 558] A native man who is impotent is very much looked down on and he is the laughing stock of the village. He is constantly made fun of by the women. The story goes that such a man when being chaffed, said, "All right, let me have the prettiest girl in the village," and they said, "All right, old *sungula*, you can do her no harm." But it came to pass that she became pregnant and the women were disgraced. The meaning of the expression is: what is done as a joke may become a reality.

22. *Mwa winji ng'omba sya nyama unandi!*
Days many, hairs of an animal few!

There are more days than there are hairs in an animal's coat! If A has done a good turn to B, and B behaves badly to A, A will remonstrate, using the above expression, meaning, "You may want my help again some day, but I shall then refuse and you will suffer."

23. *Chilambe changalinga makono!*
The (country) earth cannot (be) measured in cubits!

Meaning, "You never know when you may want return for your good deeds.

24. *Kusowela kusalaya, kuruka kulijimiya!* or *kuponya pa moto!*
To be generous (is) to save up, to be stingy (is) to deny oneself! or to throw in the fire!

Kindness returns to the doer.

25. *Uwili ukoto, ujiku wangalikunda kunyuma!*
Two-ness (is) good, oneness he cannot rub the back!

Ku-kunda = to rub the back of another person while bathing, a thing a native appreciates very much. An expression often used with the meaning, "There is safety in numbers," (*winji iakoto!*)

26. *Kulagaga ukusiulilawilila!*
Being in a state of poverty, one must not hang (oneself)!

Ku-laga = to be poor, to be in trouble. Do not give up hope.

27. *Kusichilaga kajangalila kwiwoga!*
Having become rich one must jump for joy in the dark corner of the house.

162 IT SHOULD
589 be noted that only 27—11 per cent. of the whole sample of 246 women—had never married and that 23, 80 per cent., of these (or 10 per cent. of the total) were under the age of 20 and therefore stood a good chance of yet marrying. Furthermore, 2 of the 4 women over 20 who had not married were known definitely to be incapable of marrying (one is insane and the other has violent epileptic fits).

There were 53 women who were divorcees or widows (21·5 per cent.), but it should be noted that 27 (or 11 per cent. of the 246 women) were over the age of 45 and therefore were past, or nearly past, the child-bearing period. Those in the younger age-groups stood good chances of remarrying. Table IV shows that though
[586] the divorce rate is high[1] remarriage is common. By the time a woman's child-
[587] bearing period has ended she has been married on the average 1·7 times. Few marriages are contracted after child-bearing ceases.

TABLE IV. *Marriages and Dissolutions of Marriage experienced by all Women over the Age of 13*

162
586
587

Present age	*No. of women*	*No. of marriages contracted*	*No. of divorces experienced*	*No. widowed*	*No. still married*	*No. of marriages per woman*	*No. of divorces per woman*	*No. of marriages per woman ended by death of husband*	*No. of marriages per woman still existing*
13–20	45	22	1	..	21	0·49	0·02	0·00	0·46
20–30	79	104	36	4	64	1·32	0·45	0·05	0·81
30–45	70	121	50	18	55	1·73	0·71	0·23	0·79
Over 45	52	88	29	34	25	1·70	0·57	0·65	0·48
Total	246	335	116	54	165	1·36	0·47	0·22	0·67

●842 These statistics, showing the early age of marriage, the early commencement of child-bearing, the high incidence of marriage among women, and the high rate of remarriage during the child-bearing period, all point to the high valuation of
[187] reproduction reflected in Yao culture. This is consistent with their social structure,
[61] where the major corporate groups are kinship groups and reproduction is the principal method of recruitment to the group. Furthermore, because the standard of living is almost at subsistence level, children do not entail the economic losses
[593] they do in Western society. On the other hand, they are expected to support their
[888] aged parents when they themselves are economically independent. In other words, there are few factors militating against reproduction and many in favour of it.

554 We may expect the beliefs and customs surrounding child-birth to reflect the value
884 of reproduction. For instance, the Yao distinguish clearly between women who have
[187] borne children and those who have not. When a girl becomes pregnant for the
[842] first time she undergoes a special ceremony (*litiśo*) attended only by women who
[843] have borne children. This ceremony has many of the features of a *rite de passage* and appears to mark the passing of the woman to a new social status. Furthermore, women are ascribed status according to the number of children they have borne. The word *anwali* signifies a young woman who has not yet borne a child; *anwali*

[1] Between a third and a half of the marriages contracted by women had been dissolved by divorce by the time that the child-bearing period had ended.

ndembo, a woman who is pregnant for the first time;[1] *kacembere*, a woman who has one or two children; *mjembere*, a woman who has three or four children, and lastly, *ndalwa*, a woman who is past child-bearing age. 554 584

The information which I have been able to collect on abortifacients and contraceptives suggests that they are not used by married people merely to prevent their having more children, but that they are used by people who wish to avoid pregnancies which would be embarrassing, for example, by a woman whose husband is a labour migrant. To what extent the abortifacients and contraceptives are efficacious I cannot say; some, I know for certain, rely on a magical principle, for example, the medicated cord worn by a man during intercourse. On the other hand, the abortifacients taken orally may have some active ingredient. 842

A barren woman or an impotent man is regarded with some embarrassment and the marriage sureties (*arinamangorwe*) of a childless couple will go to considerable trouble and expense consulting diviners and leeches in an attempt to make their wards productive. Childless couples are regarded as not fully adult and are treated in a patronizing way by those who have borne children. Since a man may marry other wives, barrenness in a woman is a cause of sorrow to her husband, but is not in itself a ground for divorce. Where the man is impotent, however, the woman may divorce him on this ground, though she usually takes a paramour and forces her husband to an action for damages which automatically leads to a divorce because it is the usual practice in these cases for the court to ask the woman if she wants to be divorced from her husband. [885] [554] [586] [837] [694]

In contrast to the satisfaction shown at the birth of a child is the sense of awe evinced when a child is still-born or the woman miscarries. The Yao do not distinguish between still-births and abortions, both events being known by the word *kwasanga*. This is a verb and refers to the process of abortion; there is no term for the dead foetus itself. I made no attempt to enumerate miscarriages and still-births because they are supposed to be due to breaches of sexual taboos on the part of the husband and wife, and interviewees were naturally reluctant to mention them. Miscarriages and still-births are greatly feared, and the woman is considered to be in a very dangerous condition until she and her husband have carried out a ritual purification. Should a man have intercourse with a woman who has miscarried and not yet been purified he will contract a disease called *lwaso* which is believed to be invariably fatal. Still-born children or aborted foetuses are buried in a hole dug with sharpened sticks in the bush by the women, whereas children who are born alive and die afterwards are buried in the graveyard in graves dug by men with hoes. The burial spots of still-born babies or aborted foetuses are marked with a stone or broken pottery, since it is believed that to step on them will induce an illness. 845 [783] [753] [766]

The concern of the interested kin-groups is shown in the child-birth procedure. Birth normally takes place in a hut in the presence of the older female relatives of the woman and the female representatives of the man. The husband's representatives are necessary because the Yao, like many other Central African peoples, believe that an adulterine child will not be born to the woman unless she confesses (*kupaca*) the name of the genitor. If she persists in concealing the identity of the genitor, they 844

[1] *ndembo* — elephant, hence ivory. The terms *lilibo* and *ndembo* here both refer to the ivory beads traditionally worn by the woman in the pregnancy initiation ceremony. [192] [361]

6: Mitchell E-5 (1946-1947) 1949 FT7 Yao FT7

844 believe that she will die. The man's representatives are therefore able to establish the child's paternity from the birth-pang confessions of the woman.

846 The child is kept in the hut where it was born, for six or seven days, while the umbilical cord dries and falls off. During this time (*kuli*) the child is unnamed, and [553] it is named only when it is taken out of the hut. Should it die during this period of seclusion it remains unnamed and is referred to by a special term (*litaya*, pl. *mataya*). [128] I have therefore been able to enumerate live births by means of the distinction made between miscarriages and still-births (*kwatanga*) and children who lived long enough to be referred to as *mataya*. After the birth of the child the woman may not have 846 intercourse for four or five months. To do so would be to endanger the life of the [854] child with a disease called *ndaka*,[1] which is contracted by a sexually inactive person 834 when he comes into contact with a sexually active person. The husband may have intercourse with a second wife, but must take care to medicate himself so that he does not endanger the life of his child. When the child is about 4 or 5 months of age the parents perform ritual intercourse and medicate the child against the mystical dangers of sexual activity; sexual relations are then resumed.

834 The Yao say that a second child should not be born while the first is still being [853] suckled. Since lactation continues for about two years I am uncertain whether monogynists remain continent, as they say they do, or whether *coitus interruptus* is 464 practised. It is quite usual for husbands to become labour migrants when their 842 children are still very young. I have known women to write to their husbands who are away working and tell them to return because their children have 'grown', i.e. have been weaned. Labour recruiters had difficulty in recruiting men immediately after the soldiers had been demobilized at the end of the war, because the women objected, saying that they had remained childless long enough and the men must first wait until children were born. However, actual examination of birth-dates [163] shows that children are sometimes born within a year of one another and sometimes there are quite big gaps. The two-year gap between children is probably an ideal which few attain.

3. The Estimation of Fertility

(a) *Sundbaerg's Age Divisions*

128 As a preliminary estimate of fertility, Sundbaerg's trichotomy of ages may be considered. The argument behind this division of the population into Youth, Middle Age, and Old Age is that those populations with a high proportion of youth have a greater tendency to increase. Table V shows this trichotomy for the Yao with the same material for some other populations shown for comparison. Where the gross reproduction-rate is known for the period shown in the table, this is included.

128 At any one time a certain proportion of the population is absent from the area, 162 usually at some labour centre. Hence the proportions of the population are distributed abnormally. In all there appeared to be a total of sixty-three men, women, and children absent from the hamlets, who would otherwise have been living there. Hence in Table V these have been included in the totals in the 'Yao with absentees' proportions.

[1] A disease of this sort is believed in by many Central African tribes. Among the Nyanja-speaking peoples it is known as *tumpha*. [171]

11: Sanderson D-5 (ca. 1920) 1920 FT7 Yao FT7

The alternative term, *wese*, common to nearly all Bantu languages, is usually reserved for "own father," but not always. 601

Latterly, though the relationship is really *akwayo*, the husbands of a man's "daughters" or "grand-daughters" are called *atati*—in a complimentary sense, not of course in defining relationship.

The word *akwayo* is rapidly falling into desuetude for men, and is, nowadays, never used in speaking to a man of that relationship, though used freely as a mode of address to women.

Amao (or *achikulu-wangu*, *-wao*, etc., "my, his mother") may be further defined as "great" or "little" in the same manner as *atati*.

The parents of any *atati* or *amao*, and those of one's wife are called *ambuje* ("grandparent"). Great-grandparents are specified as "father" or "mother of my grandfather (or mother)."

The founder of a family is called *Likolo*, especially in prayer—except for the augmentative prefix obviously the same word as *Nawyolo*, "a parent," which includes all "fathers" and "mothers." [182]

It is curious in this connection that a name for little girls in general, if one does not know their real name, is *chikolo*. All these words seem to be derived from *-kola* ("have," "possess"), and refer, probably, either to actual or potential possession of offspring.

Achinangolo are distinguished as "male" or "female" according as they belong to the father's or mother's side—irrespective of their own sex.

Conclusions.—The Yao nomenclature of relationships, bearing as it does the evidence of former group marriages, is, like other classificatory systems, gradually changing in conformity with the development of the race, so that it can be used to express consanguinity; Rivers has, I believe, called attention to this process. 601 198 [12]

The Yao custom—now dying out—of lending one's wife to a visitor (usually a close friend) may be a remnant of ideas carried on from communal marriage, though such a privilege is never given to a relative. [834] [514]

In the same way a man who has had no children (a great stigma) may request his friend to help him—he will never ask a relative—and all of the three parties will keep the secret of the true paternity of any children resulting. [837] [840]

In many tribes the marriage of brother and sister, or a man with his sister's child, is permitted to compensate for the law by which a man's property goes to the son of a stranger, but nothing of the kind is allowed among the Yaos. Indeed, they view any incestuous union with particular horror, and such must be very rare. I have heard of a case of a man committing incest with the idea that he would thereby become endued with supernatural power, but all he gained was ostracism; in the old days he would have been burned. 588 835 [24]

1: Tew E-4 (no date) 1950 FT7 Yao FT7

return to the *lupanda*, where the initiates are welcomed by their friends. An essential part of the ceremony which takes place at this stage is the exhibition of animal shapes made by the *m'mirira*, with mounds of earth outlined in flour. These animal shapes differ from lodge to lodge. On the last night before the return to the village the initiates undergo a ceremonial bathing, each boy being carried to the stream by a woman, who thereafter is addressed as 'elder sister'. Finally, with new names, and freshly oiled and decorated, they march to the chief's village to be redeemed by him from the *m'mirira* with gifts of cloth. After initiation it is a deadly insult to call a boy by his child-name. All who pass through initiation together consider themselves bound by mutual obligations of hospitality.[1]

Girls' initiation takes place in three stages. First, there is *cipute*, the general initiation before puberty, which corresponds to the boys' *lupanda*. It takes place at the same time of year, and though it lasts for less than a week, its conclusion is celebrated at *lupanda* jointly with the conclusion of the boys' initiation. A hut is built in the bush, like the long dormitory of the boys, and four days are spent in dancing and singing. Each girl (aged about eight years) is accompanied by a sponsor, a woman friend who continues to be her mentor during subsequent rites, and who assists in giving the girl instruction in her womanly duties. At the end the girls are bathed and anointed, dressed in new clothes, and each is carried to *lupanda* by her sponsor. Here they prove their skill in dancing and receive gifts from their friends. Ritual deflloration follows the *cipute* initiation.[2] Among Mohammedans, clitoridectomy used to be performed by a woman operator, but, it is said, was discontinued in about 1903 on account of the heavy mortality.[3]

After this first general celebration, first pregnancy and first birth are the occasions of separate rites for each girl. According to some informants there were once two ceremonies connected with pregnancy. One, for the young married men whose wives had not yet conceived, used to take place at the same time as *cipute*; each man was attended by a woman sponsor not his wife, given good advice, and put through various tests of manhood. Mitchell does not confirm the present existence of this ceremony, but in the old days if a man was betrothed or married to a child going through her *cipute* he had to accompany her.

The *litiaw* ceremony takes place when a young married woman quickens with child for the first time.[4] The woman, with her sponsor and the married women of the neighbourhood, went out in procession for a ceremony of singing and dancing and instruction to the young couple, followed by a feast. Nowadays no men are allowed to attend *litiaw*. A child born of a woman who had not undergone this rite used to be buried alive; nowadays her *ayeme mbumbu* is charged by the chief.

Finally, six days after the first child is born, its naming ceremony forms a last initiation rite for its mother. The husband is formally led into her hut by her sponsor and the married women of the neighbourhood, and the child is taken out for the first time to the accompaniment of feasting and dancing.

Most Yao men and women act as sponsors of initiates at least once, and all parti-

[1] Sources for boys' initiation: Stannus and Dewey, 1913; Werner, 1906, pp. 124-6; Stannus, 4, 1910, pp. 127-63; Henkel, 1935, pp. 19 ff.; Johnston, 1897, p. 409; Weule, 1, 1909, p. 304.
[2] Stannus, 4, 1910, p. 134. [3] Ibid., 1, 1910, p. 296.
[4] Ibid., 4, 1910, p. 174; Henkel, 1935, p. 23, calls it *ciwumbu* (belly).

2: Mitchell E-5 (1946-1949) 1956 FT7 Yao FT7

Native Authority, to the Native Authority, and eventually to the District Commissioner if the case is one which he will countenance. In practice, most cases reach the chief and go no further. Most people accept his decision. Thus the chief has important judicial functions. 692 643

The Chief as his People's Representative

In special situations where the welfare of the chiefdom as a whole has been endangered by an infringement of the mores, the chief may take action. For example, a chief prosecutes a village headman who allows a woman in his village to bear her first child before she has been through the *litiwo* ceremony. Every woman who becomes pregnant for the first time must undergo this ceremony, during which she is instructed in child welfare and child care. If she bears a child without undergoing the ceremony, she is said to have 'spoilt the country' (*ajalwice cilambo*), in the sense that she has besmirched its reputation.[1] 643 687 843

Chiefs usually call in magicians 'to smell out' those responsible for keeping back the rain.[2] When the rains fail as they did in 1948–9, their failure is held to be due to the magic of some evilly disposed person. It then becomes the chief's duty to call in a magician to indicate who this person is. The fees for this duty are paid by the chief himself on behalf of his people. 643 787 821

The chief also acts as a representative of his people when they are affected as a whole. For example, Nyambi called in a magician after man-eating lions had taken some of his subjects. This magician called for the hearth-stones and domestic utensils from all the villages in the area, and built them up into a pyramid over which he made some anti-lion medicine. This was to clear the whole chiefdom of man-eating lions. 643 789 731

Nowadays, the chief's representation of his people is seen most clearly in his position in the Administrative framework.[3] The chief represents the Administration to his people since they approach it through him. At the same time the Administration clearly treats him as the representative of his people and consults 643

[1] I was told in Mponda's area that the women undergo this ceremony *after* the birth of the child, but that it is still obligatory.

[2] *Kutowa ulo*—lit. 'to tie or bind the rain', in the sense of to make it a prisoner.

[3] I have dealt with this aspect more fully in 'The Political Organization of the Yao of Southern Nyasaland'.

2: Mitchell E-5 (1946-1949) 1956 FT7 Yao FT7

621 making the oblation, pours the beer or sprinkles the flour at the
613 root (*lipata*) of a shrine-tree. As would be consistent with this
769 way of looking at the lineage, genealogically-distant ancestors are said to be 'below' (*pasi*), so that if a Yao wishes to say that a certain person was a matrilineal ancestor many generations back, he would say that he was 'very much below'.

The Concept of 'The Mother'

613 The matrilineal descendants of the founder look upon them-
562 selves as having been fed from the same breast and may express this by saying 'we are of one breast'.[1] Deep sentiment is
843 attached to the idea of the mother among the Yao. There is, for example, a sharp distinction drawn between those women who have had children and those who have not. When a woman becomes pregnant for the first time, she is given instruction in child welfare when she undergoes a special ceremony (*litiwo*). This is a ceremony which is publicly announced and attended by most of her matrilineal and other kinswomen and acquaintances. No woman may attend this ceremony if she has not herself had a baby. Thus her change in status in the community is clearly shown by the public recognition of her condition, and the fact that she is initiated into secrets which are shared by other mothers only. Her position in the lineage is much enhanced when she becomes a mother. It is the most important step towards becoming a village founder herself.

562 The concept of 'the mother', in general, also appears in the
601 boys' initiation ceremonies. Certain phases of ceremonies may be conducted only with the help of the women. They have to
881 clap the rhythm to which the 'tailmen'[2] do their dances. Here all women are classified as 'mothers' and without their co-operation the ceremonies could not be conducted. During the same ceremonies three women appear with baskets of food on their heads. The tailmen remove the baskets and sacralize the

[1] *Tuli peûele pamo.* The word *mlango*, a doorway, is also commonly used. The idea in essence is exactly the same. It is the concept of the children who come to settle around a woman's hut door. It is used as *ûandu pamlango pao*, the people of his lineage section.

[2] The *m'mchira.* These are the functionaries in the initiation ceremonies. They carry medicated zebra tails during these ceremonies, and this gives them their names. See especially Stannus, 'The Wayao of Nyasaland', 229 ff.

2: Mitchell E-5 (1946-1949) 1956 FT7 Yao FT7

613 members goes to an outsider and grumbles to him about the
754 family squabbles[1] and quarrels. The outsider then takes the
578 opportunity of using this squabble to introduce his sorcery into
626 the lineage. The Yao greatly fear backbiting because of their dread of sorcery and none dreads it more than a village headman, a warden of a sorority-group,[2] or a person in the position of having to keep a matrilineage or section together. These people are continually adjuring the women under them—for it is the women who are believed to be the main culprits—not to fight among themselves; and if they do, not to take their complaints to an outsider but to the senior member of the matrilineage. The significance of this in relation to lineage unity is plain enough.

613 Apart from sorcery, strained relationships between members of
578 a matrilineage are believed to be dangerous for other reasons.
843 Malice may adversely affect people who are in mystically danger-
224 ous states. The most common of these states is pregnancy. If a woman has a quarrel with a matrilineage member while she is pregnant she is likely to have a difficult labour. The Yao say 'the womb has heard these bad words'. Another situation where malice or quarrelling will cause difficulties is in hunting. The luck of the chase is capricious and malice may easily bring bad fortune to an otherwise good hunter. For example, a successful hunter once gave each of his two sisters a piece of venison. Each complained that the other had been given the larger piece and quarrelled vehemently about it for weeks. The hunter now found that no game fell into his traps. He went to a diviner who indicated the quarrel of the sisters as the cause of his failure and told the hunter to get them to 'blow water' (*kupetya*). He did this; good relationships were restored and his traps were filled once more.

613 These deleterious effects, like the curse, are connected in some
578 way with the ancestor spirits. This is sometimes expressed quite
769 clearly when a person is called upon to 'blow water'. A mother who wishes to revoke a curse, a woman who wishes to
755 recant her malice towards her matrilineal relative who is suffering in childbirth, or a man whose sister's son is ill supposedly because

[1] This is called *mimi*, which I have translated as 'backbiting'. This idea is extremely important, as we shall see later.

[2] i.e. those men who are responsible for their sisters and their descendants. See p. 145 ff.

3: Stannus D-5 (ca. 1912) 1922 FT7 Yao FT7

585 from of her married life begins. The man and woman live together peaceably enough as
a rule, each attending to his own sphere of work. The man builds the house, the woman
462 made the floors; she sweeps and cooks, she is the hewer of wood and drawer of water. The
man hunts, fishes, makes mats, baskets, the grain store, game traps, and bark-cloth; he
looks after the tobacco, and makes the snuff, while his wife brews the beer. He it is who
fashions the gourd vessels and carves the spoons, while the woman is the potter (Pl. III, 4)
and pipe-maker. Together they hoe and together they harvest, but to the woman falls the
monotonous drudgery of pounding and sifting the corn for flour.

842 The Yao have a custom like that of the Anyanja. A sister brings to the house of the
newly wedded pair a log of green wood from a *mbanga* tree which is very hard; the log
[522] may be two feet in diameter and four feet long. Should the bride not become pregnant
before it is burned away, the husband is laughed at and they may both be teased by having
[558] many logs brought to the house. A man who has no children is much despised and there
is a saying, "He must have eaten some ground-nuts," punning on the word for a thick-
skinned variety of ground-nut, *chimbumba*, a word which also means sterility. An impotent
[837] man may, with the consent of his wife, introduce some male friend into the house, any
children born in consequence being claimed as the husband's. He usually chooses some
friend from a distance to obviate any attachment springing up between him and the wife.
Two married couples may, all consenting, exchange consorts for the night, but they never
live together like this for long periods.

582 There is one well-defined marriage taboo; a man may not marry a woman of his own
clan. In the old days, he was also restricted to his own tribe, except in the case of slave
[611] wives and wives by capture. Since the clan is inherited from the mother,[1] a man may not
marry the daughters of his maternal aunts, but he may marry his other female cousins.
[587] He may not marry two sisters nor a deceased wife's sister; neither do two brothers marry
two sisters.

595 The number of wives is limited only by the husband's ability to provide for them. In
addition to free wives, a man might formerly have a number of slave wives. The head wife
is called *kwapele*, the other wives, *mangumbo*. The word given by Macdonald, *akwapele*,[2]
meaning the junior wives, is a Chinyanja word and, I think, wrongly applied.

582 It has been said that a man always marries into the village of his wife. For this reason,
[843] female children are always prized as it means an increase in the number of able-bodied
men added to the village. In rare cases, the wife might be taken to the husband's village,
[583] as is the Anyanja practice.[3] This, of course, is true in the case of chiefs and headmen. Here,
we may also note that no payment is made for the wife and no dowry is received with her.

584 To revert to betrothal, occasionally the sponsors will not agree to the marriage and a
843 runaway match takes place, but in the end, the marriage is usually regularized by the
sponsors coming to an agreement. If, however, the woman has in the meantime become

[1] Vide infra, p. 363. [2] Op. cit., p. 134. [3] Stannus, op. cit., p. 338.

3:Stannus D-5 (ca.1912) 1922 FT7 Yao FT7

pregnant, the meeting of the sponsors will have to be postponed until after the ceremony 584
connected with her first quickening with child, *Lilisu*.[1] This ceremony must be performed 843
whether the girl is regularly married or not. One party cannot ask the other for permission that both ceremonies take place at the same time. The answer would be given, "You are asking me to kill two beasts with one bullet." In rare cases, the chief may sanction the marriage and *Lilisu* ceremonies taking place at about the same time, i.e. the marriage is arranged before the child is born.

Widowhood. A widow is considered unclean for a period after the death of her husband. 589
She wears a band of palm-leaf or string around her forehead. When the period is passed 587
and some man wishes to marry her, arrangement is made with some other man to cohabit [835]
with her for payment; she is then said to be clean and can go to her prospective husband. This ceremony is called *kutema mpanji*, "to cut the strings," or in Chinyanja, *ku-dula mlusu*, "to cut the palm"; unless it is performed, the new husband will sicken. The man introduced for the purpose is called by the Yao, *kitwa*, the "hyaena," "he who comes by night."

Divorce. From time to time, married people disagree and one deserts the other. If the 586
woman leaves the man, he has a claim against her and the man to whom she goes for all the clothes he has supplied her with during their married life. The husband usually sides with the wife's relatives and arranges that they look after the children; he does not claim them. When the husband and wife mutually wish to separate, they both meet with their sponsors and everything is duly arranged. The husband will give his wife an arrow, saying, "*Mpamba* (the arrow)," meaning, "If I come back, may it kill me." The place of the arrow may be taken by a bullet or any other object, even a piece of grass. The man will add, "*Swaka, swaka, na likuwa!* (rattling, rattling, it is a rat!)," inferring that if his wife hears something rattling in the house, it is a rat, not himself trying to come back. There is no definite payment of compensation. If the woman marries again, she presents the "arrow" to her second husband as a sign that she has been freed from her first marriage; without this token, no man would marry her.

Actual adultery was in the old days very rare owing to the strict enforcement of rules, 684
and the case of a woman demanding divorce on account of the adultery of her husband 586
formed a *causa célèbre*. The case heard by the chief would last for days and hundreds of people would come to listen. Neighboring Anyanja pleaders would be invited to speak and great excitement prevailed, as these latter would be accompanied by their villagers, who, to the accompaniment of continuous drumming, would sing, "*Mbawala anakafwa m'nkonda*,[2] (The bush-buck has run his head into the net)," while they ran about running their heads into their game-nets.

Other causes of separation are neglect of duty, sterility of the wife, and habitual death 586
of the children born.

[1] Vide infra, p. 274. [2] Chin.

843 *Pregnancy and childbirth.* An event of the first importance in the Yao world is the first conception or rather the "quickening" with the first child, *Lilaw*; this is described below, together with the other ceremonies of the *Usanga*.[1] After the ceremony of *Lilaw*, the period of waiting until the birth of the child passes without further event. A point of medical interest is that native women suffer in many cases from "morning sickness" during pregnancy. That they may have perverted appetites is also recognised, grain husks and crabs being among the things most commonly desired. As the Anyanja,[2] the Yao believe that the child develops from the semen of the male, although the growth of the child is in some way connected with the mother.

844 When labor commences, the woman retires to the bush a few hundred yards away from her house, attended by some friend, seldom a midwife, and never by her own people, though the mother and the mother-in-law will probably be near the spot. If labor is not completed by evening, they return to the house and the birth may take place actually within its walls. The attitude assumed in labor is the same as that adopted by the Anyanja,[3] the patient semi-reclining in the arms of another woman who sits behind, grasping her belly. The vulva is smeared with a decoction made from the bark of the *mpoza* tree as a lubricant, but no other help is given. *Kanduli* is the name given to the place of confinement; *m'buli* means the house where the woman remains for a period after the confinement. The Yao recognise the protruding bag of amniotic fluid and call it the "oil-gourd". "*Chiusi chikusiche?* (The oil-gourd, has it broken?)." They wait until the placenta is delivered before dividing the cord. This is done with the sharp edge of the outer covering of a maize stalk or sugar cane; a knife is never used. The section is made near the placenta or half-way between it and the child, after tying the proximal end with a bark string.

The woman who receives the child at birth is the *ambuasanga*, friend or godmother. If the infant is born in the bush, she carries it back to the house whither they go as soon as labor is completed. The mother herself, unless she is very ill, goes out shortly afterwards and buries the placenta in the ash-heap, using a stick to dig the hole, never a hoe.

846 After the birth, the mother and child must remain in the house until the umbilical cord separates, during which time the husband does not enter, though he may come to the door to look in at the child.

852 553 302 The day on which exit from the house is made, the floor is entirely replastered with mud. The baby's head is shaved and a cross is made upon it with *mpemu*, a kind of red pigment. The husband may then receive the child and in the case of a first-born, it is he who gives it its name; other children may be named by the *ambuasanga*, the mother, or the aunt.

When the mother leaves the house to appear in public, the *mlongo* who put her *lilaw* on,[4] removes it.

So long as the infant remains in the house, care must be taken as to persons allowed to handle it. A woman who has recently had a menstrual period or coitus with her husband,

[1] Vide infra, p. 274. [2] Stannus, op. cit., p. 310. [3] Ibid. [4] Vide infra, p. 274.

281 842 the red beads, he is jeered at and laughed to scorn. In this case, the white beads are held to indicate semen, the red beads menstrual blood.

843 *Lítiwe:* This ceremony is enacted at the time when a young married woman quickens with her first child. *Lítiwe* (*ku-tiwa*, to plait) refers to the plaited cord put round the woman's neck. The woman and her husband both are present, and in addition, only women, possibly with their babies.

For the man, *Lítiwe* is looked upon as the third or completing ceremony of his *Unyago*. He must have been to *Lupanda* and *Chiputu*, otherwise he cannot be admitted to *Lítiwe*. If, however, the husband is not eligible, some other man who has completed his *Unyago*, is married, and has children, may act as proxy to a woman at *Lítiwe*.

In every district there is generally some woman who arranges and conducts the ceremony. She is called *nakunga;* naturally, no European has been present at *Lítiwe* but my information was gained from Kuliati, a woman who for years acted as *nakunga* in the villages round Malemya's kraal, and Chilandana, her old mother who had acted in the same capacity before her and who had come from the old Machinga country where her mother in turn had been a well-known *nakunga*. [115]

When a woman quickens with child for the first time, her women-folk visit the local *nakunga*, saying, "We are going to shave so and so (naming the woman) and to get bananas. Tomorrow, we start pounding flour. In three days we shall be ready, and you will come over to arrange things." At the appointed time, the *nakunga* having partaken of food early because she will not eat for the rest of the day, goes out of the village to some spot a half-mile away in the bush and there sees that all preparations are made and sufficient food collected. The food is supplied by the mothers of the man and woman, and consists essentially of beans (*njama* and *ngunde*), porridge, sugar-cane, and bananas, but no beer.

All being ready, a procession in single file leaves the village for the appointed place, the woman's sponsor leading, the woman followed by the husband and his sponsor (a woman), and the married women assembled from nearby villages. The sponsor is known as *nkumusi* or *olombwe*. Neither *nkumusi* nor *nakunga* may have sexual relations with their husbands till after the birth of the child. The woman wears bark-cloth stained black, but may wear blue cloth on returning to the village, while her husband is decked out in his finest cloths and ornaments. They have partaken of food early in the day as they fast until the next day.

Arrived at the place, the man and woman take up their positions on mats separated from each other by some twenty or thirty paces, each with his *nkumusi*. The man's *nkumusi* sits on the same mat with him and never leaves him throughout the ceremony. The woman preserves a dignified quiet but the man is expected to make the most of himself sitting with hands on hips, and displaying his fine clothes worn after the fashion of a chief.

While all the assembled crowd of women sit round in a semi-circle, the *nakunga* commences the proceedings, singing a number of songs to the woman and the man in turn,

3: Stannus D-5 (ca. 1912) 1922 FT7 Yao FT7

the other women joining in the refrain. A number of these songs are here given but each *nahanga* has her own favorites which she sings. They are only sung at *Litiso*. 843 843 533 539

Alitete, kainjeni: alitete kainjeni; Chorus *Mbiranjirani.*
Now you are clucking before laying an egg. Be content then, you must not be running about any more: (Chorus) Call her back for me.

Ku-itera, " to cluck as a hen " comes from *ite! ite!* the sound of the hen. Another song is:

Aiterejo atolo ta. Chorus *Aiterejo.*
You must cluck, cluck, cluck, little mouse.

A set of songs sung by Kuliati are as follows:

1. *Mbuo ngulunia, kumalambe; amao!*
   I have a headache, surely; oh dear me!
2. *Japolo, japolo, chemuali, kuutuka wuanyama!*
   Startled (like a rabbit), little girl running like a wild animal.
3. *Acungula'wa walapire ulambe!*
   The rabbit they praise for its cleverness!
   Kumbamula ngolokototo kumlemba ilemba!
   He caught (the name of a little bird) and cut his hair in the *ilemba* fashion!
4. *Uneji ndiri jua ntima; ndigomile, Chenjewero apite!*
   I have a good heart; I am contented, Chenjewero has gone!
   Ajipwe mahoutapse, amao! achamao!
   He has taken away all his dancing things, dear me! oh dear me!
5. *Wakwambapa'wala, lawe! nowe atulanjire hualala!*
   Those who are speaking (an exclamation) show us that we may see!
   Mlasi upwile mbunge, tatemera, chikata, ngolokwe, uujoje; ngolongolokwe uujoje!
   The bamboo has fallen with the wind, they shivered with fear (an alluvial plain), (a thing which is stuck) (well-dressed).

In native songs, full poetical license is indulged in and it is often difficult to give exact translations of them. The first has reference to the woman making a fuss because she feels ill with her pregnancy; this she is not supposed to do. Number 2 refers to the fact that she has a new experience which may cause her to be startled, but she need not fear. In number 3, *ngolokototo* is a bird which has a mark running back on either side of the mid-line of the crown of its head, resembling a method of hair dressing wherein two bands are shaved from front to back parallel to the mid-line. *Chenjewero* (number 4) is the name of a man but this reference is apparently now without point. Number 5 is sung by the *nahanga* when she hears murmurs of others in the crowd starting to sing other songs; she intimates, " Here are we singing, let us hear you others who wanted to sing; you are probably afraid now." In the latter part of this song, words are made use of which have a slang meaning known only to women. *Chikata* is a woman's slang word for the female pudenda; *ngoloko,* 843 539

843 538 when in child-birth there is delay in delivery it is said of the woman "*Ahalehwe*," "she is stuck," from *ku-halehwe* "to be suspended, to be caught by a thorn"; *usajeje*, well dressed, is a slang exclamation meaning "everything, everything is out!" The verse refers, of course, as all obstetricians will recognise, to the moment of crowning of the concealing head during parturition when it appears to be stuck; then suddenly it slips over the perineum and "everything, everything is out."

843 533 The *nakanga* now gives way to the songs of the other women. In different districts different versions of the songs are sung, but the other women will quickly pick up the refrain of the song sung by a woman who has come in from some distance.

843 After these songs, the *nakanga* instructs the woman and her husband in the care they must take until after the child is born. Macdonald says, speaking of the instructions "but of the quality, we prefer to be silent."[1] What a pity he allows no one else to judge!

The woman is especially cautioned against sitting with her legs crossed; they must be kept apart lest the child in her womb be suffocated. She is also told many useful things concerning her pregnancy and confinement. The husband is cautioned to cease intercourse with his wife or if he has intercourse, his wife may not lie on her back, lest the child be injured.

While this instruction is going on, all the assembled women cook and eat the feast [751] which has been made for them. When all has been said, the *nakanga* anoints the man with castor oil, which has in the meantime been warmed, and ties round the neck of the woman the *litiwo*, a cord made of plaited bark-cloth with a tassel in front; at the base of the tassel white beads are strung for good luck, and at the end of the tassel, red beads are affixed, having symbolic reference to the haemorrhage at the time of childbirth. The woman wears only a strip of calico of two hands breadth called *wletu*. She is anointed on the head, body, and limbs.

The tying of the *litiwo* is the sign for dancing to begin. It is a dance in which women try to excel one another. They come with all their tattoo marks on buttocks, thighs, and abdomen renovated; they wear diaper-fashion a narrow strip of cloth, always black in color, and round their bodies numerous strings of beads. With the beginning of the dancing, their other clothes are thrown off and practically naked, they vie with one other in exhibiting their charms and skill in dancing, which afterwards becomes the subject of much discussion among the women onlookers. "So and so is really too old and skinny for such exhibition," and "So and so has buttocks as flat as a wall," while "Such and such a one is fat and beautiful and dances wonderfully, with such *abandon*," etc. In front of the woman [431] is set a wooden plate, in front of the man a mat, and on these are thrown donations by the dancers and onlookers, consisting of beads etc., or nowadays pennies and small silver coins to help to pay the expenses of the entertainment and, in the woman's case, to buy medicine which may be necessary should the baby fall ill. When the wedded couple are

[1] *Africana*, op. cit., vol. 1, p. 129.

3:Stannus D-5 (ca. 1912) 1922 FT7 Yao FT7

generous and popular, the donations may mount up to a useful sum. Dancing goes on late into the afternoon when all return to the village. 843

The man may not speak to his guardian again until after the birth of the child. The two women guardians, the *mbususi* and the *nahunga*, as a rule cease sexual intercourse with their husbands during the same period or, at all events, during the last month before the birth of the child.

The child born of a woman who has not gone through *Litiwe* is buried alive. [847]

Chieftainship. The Yao when they migrated to their present country were headed by a number of their chiefs. These eventually settled in different areas adjacent to one another, each ruling over a considerable tract of country. The chief was supported by a number of headmen, each of whom looked after a village; the chiefs and headmen in turn being assisted by the village elders. 622 643

Often among a chief's counselors one found a number of his relatives, and sons and brothers were often made headmen. A man assuming chieftainship often had to dispose of a brother of whom he was afraid. 643

Chieftainship is hereditary, the chief's name being passed on to each successor. Succession is to eldest son of the eldest sister or a son of some other sister. Failing these, it passes to a grand-nephew. If there is no acceptable adult nephew, a full brother may succeed.

Macdonald's account of the Malemya's succession[1] is, I believe, incorrect. The old Malemya (Nalutumbo) was succeeded according to custom by his nephew, Kasabola who, as Malemya, was called Ndalama. Kumtaja was not a younger brother of Nalutumbo or Kasobola, but a cousin of the latter. Ndalama was succeeded by a nephew, not the eldest but the second son of a sister, the eldest having already succeeded to the chieftainship of Kumtaja was therefore ineligible. The present Malemya will be succeeded by a grand-nephew, the son of a daughter of his eldest sister, his sister having no sons. [114]

A successor inherited all the wives and slaves of the deceased chief and all his goods and chattels, guns, ivory and gardens. Any small possessions might be divided among the deceased's children and in the case of guns, those who had always used them often laid claims not to be separated from their weapons; these claims were often allowed by the new chief. 643 428

In the same way, any ordinary man's successor is his nephew, the son of a sister, who inherits all goods and chattels and slave wives, but not free-born wives, nor gardens, which go to the free wives. Stock is generally divided among the children.

Before 1891, when a British Protectorate was formally declared over Nyasaland, each chief ruled supreme. He was consulted as to the dates for *Unyago;* he directed the harvesting, etc.; he proclaimed war and generally was paramount among his people. It will be seen, therefore, that he was a busy man, but he received no direct remuneration. His wealth consisted of slaves and ivory. Slaves he obtained in warfare and as blood money, 643 [556]

[1] Op. cit., vol. 1, p. 189.

3: Stannus D-5 (ca. 1912) 1922 FT7 Yao FT7

771 784 6. It is believed that signs of guilt are visible in the eye of a murderer; medicine is procured in the hope of getting rid of these signs.

7. The possession of the hair of another person is supposed to give the possessor power over that person, hence a medicine man, when the patient he has been treating is cured, shaves the patient and keeps the hair until payment is made.

[826] 8. A native with light greenish-grey eyes is not to be trusted. He is said to have eyes like a cat and is called *majerijeri;* these eyes are rare among natives.

9. It is unlucky for a child to get into a basket; he may be burned.

10. Should a woman turn the porridge pot upside down, every one who has eaten will become constipated. For the same reason, a woman, after turning out the porridge from the pot, just touches the top of the mass of porridge with the bottom of the pot.

11. A woman will never leave the pounding stick in the grain-mortar. Should she do so, the heavens would fall.

12. When a sebra is killed, a knot is tied in its tail so that eating of the meat shall not cause indigestion.

13. It is unlucky to sit upon a headrest, the *masuilo.* The person would surely be bitten by a snake.

[843] 14. If a man commits murder, and his wife is pregnant at the time, she must sleep on the spear used.

15. Children are told that they must not eat at night; that if they are hungry, they must lie quiet and try to go to sleep again. If they don't obey and sit up eating porridge, a long hairy arm will come through the fastened door and beg for some, the voice of the unseen saying:

[539]

> "*Npse chimkuti'chesi nuspe ni mjase!*"
> "Give me that which you put to your nose to smell and throw away,"

the repeated movements of the hand to the mouth (nose) and back to the pot being supposed to make the "bogey" think that they are not really eating but merely smelling and throwing away the food.

16. A male should not scrape the porridge off the porridge stick; this is only allowed to the woman. Should a man do so, it is supposed that when he goes hunting, he will hit anything he shoots at, only in the tail.

17. There is a saying that the men and boys may eat little pieces of porridge which fall out of the pot, while cooking, on to the supporting stones and it will give them power to escape unhurt from battle. The fragments are called *ngulupuke,* (from *ku-lupuka* "to escape").

18. Children are instructed to take their food sitting down instead of being in a hurry and standing to take it. They are told that if they do not obey, their porridge will not go into their stomachs but into their legs and swell out their knee-joints.

3: Stanzus D-5 (ca. 1912) 1922 FT7 Yao FT7

262 no one will touch. With the exception of carrion birds such as the crow and the hawk, most birds are considered fit to eat. The hornbill is not eaten, as it is supposed to carry part [825] of a corpse on its nose.[1] Fowls form a regular article of diet, but some taboos in this connection are mentioned elsewhere.

Eggs are eaten only by children and old people; that is, by those outside the child propagating age. Milk is never consumed in any form. They say, "What a disgusting habit, to suck the juice of an animal while it is still alive!"

[843] Pregnant women will not eat certain things lest the child be born with some deformity, such as the snout of a pig, or the white stripes of a zebra.

532 Art and decoration. Sculpture can hardly be said to be an art known to the Yao. The only piece of stone work I have ever seen was a granite boulder, on the surface of which cup-holes had been made for the game of *Bau* (Pl. IV, fig. 4).

Of late years, individuals here and there have begun carving wooden figures of men and animals. The Yao, of course, make no idols. It is uncertain exactly how long it is since any of these people started producing wooden figures. I should think that this art has sprung up within the past twelve or thirteen years, that is to say, since there has been a market for them among European residents. In the first place only natives and some of the common animals, the eland and leopard, were represented; since then, many animals and Europeans have been copied. The native is extraordinarily clever in reproducing characteristic features in dress, etc., so that a Portuguese is easily distinguished from an Englishman. The little models in ivory of animals and native household objects, made by the Swahili people on Lake Nyasa, have never been copied by the Yao. Neither do they make clay images of men and cattle as do the Zulu-descended Angoni and cattle-keeping Wankonde. No native would allow any wooden figure to remain in his house for [777] fear of ill luck; the women especially would look askance at them, fearing some misfortune in their next pregnancy. Little wooden figures of birds, however, are sometimes seen affixed to the point of the hut roof.

[177] The making of carved figures, then, is of recent introduction, or rather is a recent event in the evolution of the Yao, as they were not taught but self-inspired in the work.

The ability to make representations of objects by drawing appears in the same way to originate spontaneously here and there as a sport. Natives with a talent for drawing are found among all the tribes, and among the Yao, it is said, there have always been some who have been able to draw. Naturally enough, their reproductions are made on the walls of their houses, and their subjects are generally animals of the forest, sometimes men and houses, or some other object of particular interest[2] (Pl. VIII, fig. 1). I also give sketches of some other drawings I have noted (Pl. XVIII); the line figure of a man at Makanjila's

[1] Vide supra, p. 327.

[2] Cf. A. Werner, 'A Native Painting from Nyasaland,' (Jour. Afric. Soc., London 1908, vol. 8, no. 30, p. 190-192).

IT SHOULD
162 be noted that only 27—11 per cent. of the whole sample of 246 women—had never
589 married and that 23, 80 per cent., of these (or 10 per cent. of the total) were under the age of 20 and therefore stood a good chance of yet marrying. Furthermore, 2 of the 4 women over 20 who had not married were known definitely to be incapable of marrying (one is insane and the other has violent epileptic fits).

There were 53 women who were divorcees or widows (21·5 per cent.), but it should be noted that 27 (or 11 per cent. of the 246 women) were over the age of 45 and therefore were past, or nearly past, the child-bearing period. Those in the younger age-groups stood good chances of remarrying. Table IV shows that though
[586] the divorce rate is high[1] remarriage is common. By the time a woman's child-
[587] bearing period has ended she has been married on the average 1·7 times. Few marriages are contracted after child-bearing ceases.

TABLE IV. *Marriages and Dissolutions of Marriage experienced by all Women over the Age of 13*

162
586
587

Present age	*No. of women*	*No. of marriages contracted*	*No. of divorces experienced*	*No. widowed*	*No. still married*	*No. of marriages per woman*	*No. of divorces per woman*	*No. of marriages per woman ended by death of husband*	*No. of marriages per woman still existing*
13–20	45	22	1	..	21	0·49	0·02	0·00	0·46
20–30	79	104	36	4	64	1·32	0·45	0·05	0·81
30–45	70	121	50	16	55	1·73	0·71	0·23	0·79
Over 45	52	88	29	34	23	1·70	0·57	0·65	0·48
Total	246	335	116	54	163	1·36	0·47	0·22	0·67

842 These statistics, showing the early age of marriage, the early commencement of child-bearing, the high incidence of marriage among women, and the high rate of remarriage during the child-bearing period, all point to the high valuation of
[182] reproduction reflected in Yao culture. This is consistent with their social structure,
[61] where the major corporate groups are kinship groups and reproduction is the principal method of recruitment to the group. Furthermore, because the standard of living is almost at subsistence level, children do not entail the economic losses
[593] they do in Western society. On the other hand, they are expected to support their
[888] aged parents when they themselves are economically independent. In other words, there are few factors militating against reproduction and many in favour of it.

554 We may expect the beliefs and customs surrounding child-birth to reflect the value
884 of reproduction. For instance, the Yao distinguish clearly between women who have
[182] borne children and those who have not. When a girl becomes pregnant for the
[842] first time she undergoes a special ceremony (*litiwo*) attended only by women who
[843] have borne children. This ceremony has many of the features of a *rite de passage* and appears to mark the passing of the woman to a new social status. Furthermore, women are ascribed status according to the number of children they have borne. The word *anwali* signifies a young woman who has not yet borne a child; *anwali*

[1] Between a third and a half of the marriages contracted by women had been dissolved by divorce by the time that the child-bearing period had ended.

1: Tew E-4 (no date) 1950 FT7 Yao FT7

Birth

Birth takes place in the bush, some distance from the hamlet, in the presence of female relatives of the woman and of her husband. If the child is stillborn, or miscarried, it is buried in the bush. The husband and wife must abstain from sexual intercourse for some months, until a special ritual intercourse is performed. A man who breaks this taboo is liable to contract a fatal disease, *kwasanga*. Difficult births are attributed to: (*a*) a curse spoken by a matrilineal relative—this is made effective by the intervention of the ancestors, and to remove it it is necessary to perform a rite making clear that no malice is borne; (*b*) the adultery of the woman or her husband, in which case confession will save the woman from dying; and (*c*) sorcery. 844 [845] 845

If a child is born alive it is brought to the hut of the mother or one of her female relatives, where it is secluded until its naming ceremony, about six days later. Only after the naming is the child considered to be a member of society. A second child should not be born while the first is still suckling, i.e. for about two years. When the child is about four or five months old it is ritually immunized against the dangers of sexual activity, and the parents may resume relations. Elaborate magical precautions are taken to ensure the child's survival. Children sleep with their mother, the boys until they are old enough to go to the boys' dormitory, and the girls until marriage.[1] 844 852 [513]

Initiation

The yearly initiation ceremonies, *unyago*, are the principal cultural institution of the Yao. That for the boys, *lupanda*, is the most important, and may only take place under a chief or superior village headman, whereas a girls' initiation ceremony may take place under an ordinary headman. The right to hold a boys' initiation ceremony therefore becomes a mark of status which is jealously disputed.[2] The right is expressed as 'having a *ciselo*'. A *ciselo* is the small basket in which the special sacrificial flour is carried. 881 852 [554]

Yao carry out initiation between the ages of seven and eleven, whereas generally in East Africa it is postponed until puberty.[3] In response to requests from the headmen the chief appoints the time and place of the boys' initiation ceremony for a group of villages. It is held at the end of the dry season, before the bush is burned. Each initiate is accompanied by a sponsor, *nkamusi*, who may be a brother, uncle, or friend. Before they set out for the place appointed to be *lupanda*, they all assemble before the chief to be anointed with millet-flour specially prepared by his head wife. The word *lupanda* refers to a forked stick over which the sacrificial flour is poured. This stick is planted at the place of assembly, the *masakasa*. The boys, their sponsors, and the master of ceremonies, *m'micira*, are accompanied with dancing as far as *masakasa* by their friends. The next day the initiates go to a spot in the bush, where the circumcision (formerly only an incision) is performed, and remain in the bush school, *ndagala*, for about two months, until the wounds are completely healed. The Yao circumcision rite is said not to have been introduced by the Arabs.[4]

During these weeks the boys are subjected to rigorous discipline and instructed in various skills and tribal lore. They sleep in long dormitory huts, with partitions dividing the boys of different villages from each other. The chief appoints the day for

[1] Werner, 1906, pp. 144–5.
[2] Stannus and Davey, 1913, p. 119.
[3] Duff, 1903, p. 312.
[4] Livingstone, 1874, p. 81.

1: Tew E-4 (no date) 1950 FT7 Yao FT7

return to the *lupanda*, where the initiates are welcomed by their friends. An essential part of the ceremony which takes place at this stage is the exhibition of animal shapes made by the *m'micira*, with mounds of earth outlined in flour. These animal shapes differ from lodge to lodge. On the last night before the return to the village the initiates undergo a ceremonial bathing, each boy being carried to the stream by a woman, who thereafter is addressed as 'elder sister'. Finally, with new names, and freshly oiled and decorated, they march to the chief's village to be redeemed by him from the *m'micira* with gifts of cloth. After initiation it is a deadly insult to call a boy by his child-name. All who pass through initiation together consider themselves bound by mutual obligations of hospitality.[1]

Girls' initiation takes place in three stages. First, there is *ciputu*, the general initiation before puberty, which corresponds to the boys' *lupanda*. It takes place at the same time of year, and though it lasts for less than a week, its conclusion is celebrated at *lupanda* jointly with the conclusion of the boys' initiation. A hut is built in the bush, like the long dormitory of the boys, and four days are spent in dancing and singing. Each girl (aged about eight years) is accompanied by a sponsor, a woman friend who continues to be her mentor during subsequent rites, and who assists in giving the girl instruction in her womanly duties. At the end the girls are bathed and anointed, dressed in new clothes, and each is carried to *lupanda* by her sponsor. Here they prove their skill in dancing and receive gifts from their friends. Ritual defloration follows the *ciputu* initiation.[2] Among Mohammedans, clitoridectomy used to be performed by a woman operator, but, it is said, was discontinued in about 1903 on account of the heavy mortality.[3]

After this first general celebration, first pregnancy and first birth are the occasions of separate rites for each girl. According to some informants there were once two ceremonies connected with pregnancy. One, for the young married men whose wives had not yet conceived, used to take place at the same time as *ciputu*; each man was attended by a woman sponsor not his wife, given good advice, and put through various tests of manhood. Mitchell does not confirm the present existence of this ceremony, but in the old days if a man was betrothed or married to a child going through her *ciputu* he had to accompany her.

The *litiwo* ceremony takes place when a young married woman quickens with child for the first time.[4] The woman, with her sponsor and the married women of the neighbourhood, went out in procession for a ceremony of singing and dancing and instruction to the young couple, followed by a feast. Nowadays no men are allowed to attend *litiwo*. A child born of a woman who had not undergone this rite used to be buried alive; nowadays her *asyene mbumba* is charged by the chief.

Finally, six days after the first child is born, its naming ceremony forms a last initiation rite for its mother. The husband is formally led into her hut by her sponsor and the married women of the neighbourhood, and the child is taken out for the first time to the accompaniment of feasting and dancing.

Most Yao men and women act as sponsors of initiates at least once, and all parti-

[1] Sources for boys' initiation: Stannus and Davey, 1913; Werner, 1906, pp. 124–6; Stannus, 4, 1922, pp. 247–63; Heckel, 1935, pp. 19 sq.; Johnston, 1897, p. 409; Weule, 1, 1909, p. 304.

[2] Stannus, 4, 1922, p. 234.

[3] Ibid., 1, 1910, p. 296.

[4] Ibid., 4, 1922, p. 274; Heckel, 1935, p. 23, calls it *cinumbu* (belly).

843 842 *Pregnancy and childbirth.* An event of the first importance in the Yao world is the first conception or rather the "quickening" with the first child, *Litiwo*; this is described below, together with the other ceremonies of the *Unyago*.[1] After the ceremony of *Litiwo*, the period of waiting until the birth of the child passes without further event. A point of medical interest is that native women suffer in many cases from "morning sickness" during pregnancy. That they may have perverted appetites is also recognised, grain husks and crabs being among the things most commonly desired. As the Anyanja,[2] the Yao believe that the child develops from the semen of the male, although the growth of the child is in some way connected with the mother.

[171]

844 When labor commences, the woman retires to the bush a few hundred yards away from her house, attended by some friend, seldom a midwife, and never by her own people, though the mother and the mother-in-law will probably be near the spot. If labor is not completed by evening, they return to the house and the birth may take place actually within its walls. The attitude assumed in labor is the same as that adopted by the Anyanja,[3] the patient semi-reclining in the arms of another woman who sits behind, grasping her belly. The vulva is smeared with a decoction made from the bark of the *mpeu* tree as a lubricant, but no other help is given. *Kumhuli* is the name given to the place of confinement; *m'huli* means the house where the woman remains for a period after the confinement. The Yao recognise the protruding bag of amniotic fluid and call it the "oil-gourd". "*Chiansi chikuseiche?* (The oil-gourd, has it broken?)." They wait until the placenta is delivered before dividing the cord. This is done with the sharp edge of the outer covering of a maize stalk or sugar cane; a knife is never used. The section is made near the placenta or half-way between it and the child, after tying the proximal end with a bark string.

[171]

The woman who receives the child at birth is the *ambuzanga*, friend or godmother. If the infant is born in the bush, she carries it back to the house whither they go as soon as labor is completed. The mother herself, unless she is very ill, goes out shortly afterwards and buries the placenta in the ash-heap, using a stick to dig the hole, never a hoe.

846 After the birth, the mother and child must remain in the house until the umbilical cord separates, during which time the husband does not enter, though he may come to the door to look in at the child.

The day on which exit from the house is made, the floor is entirely replastered with mud. [852] The baby's head is shaved and a cross is made upon it with *upama*, a kind of red pigment. [553] The husband may then receive the child and in the case of a first-born, it is he who gives it [302] its name; other children may be named by the *ambuzanga*, the mother, or the aunt.

When the mother leaves the house to appear in public, the *nalunga* who put her *litiwo* on,[4] removes it.

So long as the infant remains in the house, care must be taken as to persons allowed to handle it. A woman who has recently had a menstrual period or coitus with her husband,

[1] Vide infra, p. 274. [2] Stannus, op. cit., p. 348. [3] Ibid. [4] Vide infra, p. 274.

3: Stannus D-5 (ca. 1912) 1922 FT7 Yao FT7

or a girl who has just returned from *Chíputu* must not touch the child, as it is said, "Her body is hot and would give fever to the child." To guard against such a happening, some "clean" woman, after handing some beads to the mother, will ask to be allowed to take the infant. This indicates that should it sicken, the beads will pay the medicine-woman who comes to cure it. The mother and baby are simply washed in water and are not treated with medicine, unless meconium has been voided before the child was delivered.[1] If the infant dies before it is presented to the outside world, it is disposed of in the same way as a stillborn child, i.e. buried in the ash-heap. About the tenth day, the baby is adorned with a girdle of beads and two little pieces of stick obtained from a medicine-woman to make the infant grow fat. 846 [845 766] [856]

The length of time during which the father and mother refrain from cohabitation after the birth of a baby varies greatly according to circumstance. Four months is probably a minimum, while two years, during which the woman suckles the child, is the common interval. After the first coitus, the man and woman wash themselves and the baby is bathed in the same water to prevent any ill coming to it. 833

Suckling often continues much longer than two years. If the mother dies, the child may be suckled by the grandmother, an aunt, or some other woman, but the breasts must first be treated with medicine or the child would die 853

A child born breech first is called *salanga*, a word which is also used to denote a variety of domestic fowl which always has the appearance of having its feathers ruffled. A child who dies before the father and mother have resumed sexual relations is buried in a graveyard apart from that of adults. The grave, dug with sticks, not hoes, is very shallow, and when it is filled in, a heap of stones is made above it. Only women attend the burial. A deep grave would cause the mother to go on losing children at an early age. The body of such a child is called *litunu*, "hyaena." 845 766

A woman dying undelivered is placed in the grave in the usual way and then, before filling in the earth, one of the grave-diggers descends into the pit, cuts through the enveloping shroud, and incises the abdomen. One end of a long bamboo stick or reed is inserted in the incision and the other end is brought out to the surface of the grave. If this were not done, "many would die in childbirth." 844 766

Twins are not killed by the Yao but are well treated and always cared for equally. They are given similar clothing and food.[2] There is a story that the mother of Nkwamba, 845

[1] *Chíputu*, vide *infra*, p. 286.

[2] Cf. A. Werner, 'Among the Congo Cannibals, by John H. Weeks, London, 1913, a review,' (Man, vol. 14, no. 18, 1914, p. 18).

I take this opportunity of referring to Miss Werner's review in which, speaking of twins, she says, "They are always among the Anyanja given the names *Mapali* and *Nyama*." *Mapali* in Chinyanja refers to a kind of musical instrument and the Chiyao meaning is "movement pain." *Nyama* is a Chiyao word which certainly means "the back." It is sometimes used of the second born twin but does not occur in Chinyanja. I have never heard of twins either among the Wayao or the Anyanja spoken of by these names. A mother carries the first born on the right arm and the second born on the left, but, so far as I know, she does not give a duplicate greeting nor make a habit of eating equally with both hands. [114]

ndembo, a woman who is pregnant for the first time;[1] *kwembere*, a woman who has one or two children; *mjembere*, a woman who has three or four children, and lastly, *ndabwa*, a woman who is past child-bearing age. 554 584

The information which I have been able to collect on abortifacients and contraceptives suggests that they are not used by married people merely to prevent their having more children, but that they are used by people who wish to avoid pregnancies which would be embarrassing, for example, by a woman whose husband is a labour migrant. To what extent the abortifacients and contraceptives are efficacious I cannot say; some, I know for certain, rely on a magical principle, for example, the medicated cord worn by a man during intercourse. On the other hand, the abortifacients taken orally may have some active ingredient. 842

A barren woman or an impotent man is regarded with some embarrassment and the marriage sureties (*arisamangoswe*) of a childless couple will go to considerable trouble and expense consulting diviners and leeches in an attempt to make the[illegible] wards productive. Childless couples are regarded as not fully adult and are treat[illegible] in a patronizing way by those who have borne children. Since a man may marry other wives, barrenness in a woman is a cause of sorrow to her husband, but is not in itself a ground for divorce. Where the man is impotent, however, the woman may divorce him on this ground, though she usually takes a paramour and forces her husband to an action for damages which automatically leads to a divorce because it is the usual practice in these cases for the court to ask the woman if she wants to be divorced from her husband. [585] [554] [586] [837] [694]

In contrast to the satisfaction shown at the birth of a child is the sense of awe evinced when a child is still-born or the woman miscarries. The Yao do not distinguish between still-births and abortions, both events being known by the word *kwasanga*. This is a verb and refers to the process of abortion; there is no term for the dead foetus itself. I made no attempt to enumerate miscarriages and still-births because they are supposed to be due to breaches of sexual taboos on the part of the husband and wife, and interviewees were naturally reluctant to mention them. Miscarriages and still-births are greatly feared, and the woman is considered to be in a very dangerous condition until she and her husband have carried out a ritual purification. Should a man have intercourse with a woman who has miscarried and not yet been purified he will contract a disease called *lwazo* which is believed to be invariably fatal. Still-born children or aborted foetuses are buried in a hole dug with sharpened sticks in the bush by the women, whereas children who are born alive and die afterwards are buried in the graveyard in graves dug by men with hoes. The burial spots of still-born babies or aborted foetuses are marked with a stone or broken pottery, since it is believed that to step on them will induce an illness. 845 [783] [753] [766]

The concern of the interested kin-groups is shown in the child-birth procedure. Birth normally takes place in a hut in the presence of the older female relatives of the woman and the female representatives of the man. The husband's representatives are necessary because the Yao, like many other Central African peoples, believe that an adulterine child will not be born to the woman unless she confesses (*kupaza*) the name of the genitor. If she persists in concealing the identity of the genitor, they 844

[1] *ndembo* – elephant, hence ivory. The terms *lilibo* and *ndembo* here both refer to the ivory beads traditionally worn by the woman in the pregnancy initiation ceremony. [192] [361]

6: Mitchell E-5 (1946-1947) 1949 FT7 Yao FT7

believe that she will die. The man's representatives are therefore able to establish the child's paternity from the birth-pang confessions of the woman.

The child is kept in the hut where it was born, for six or seven days, while the umbilical cord dries and falls off. During this time (*lusi*) the child is unnamed, and it is named only when it is taken out of the hut. Should it die during this period of seclusion it remains unnamed and is referred to by a special term (*litupa*, pl. *matupa*). I have therefore been able to enumerate live births by means of the distinction made between miscarriages and still-births (*kwatanga*) and children who lived long enough to be referred to as *matupa*. After the birth of the child the woman may not have intercourse for four or five months. To do so would be to endanger the life of the child with a disease called *ndoka*,[1] which is contracted by a sexually inactive person when he comes into contact with a sexually active person. The husband may have intercourse with a second wife, but must take care to medicate himself so that he does not endanger the life of his child. When the child is about 4 or 5 months of age the parents perform ritual intercourse and medicate the child against the mystical dangers of sexual activity; sexual relations are then resumed.

The Yao say that a second child should not be born while the first is still being suckled. Since lactation continues for about two years I am uncertain whether monogynists remain continent, as they say they do, or whether *coitus interruptus* is practised. It is quite usual for husbands to become labour migrants when their children are still very young. I have known women to write to their husbands who are away working and tell them to return because their children have 'grown', i.e. have been weaned. Labour recruiters had difficulty in recruiting men immediately after the soldiers had been demobilized at the end of the war, because the women objected, saying that they had remained childless long enough and the men must first wait until children were born. However, actual examination of birth-dates shows that children are sometimes born within a year of one another and sometimes there are quite big gaps. The two-year gap between children is probably an ideal which few attain.

5. The Estimation of Fertility

(a) *Sundbaerg's Age Divisions*

As a preliminary estimate of fertility, Sundbaerg's trichotomy of ages may be considered. The argument behind this division of the population into Youth, Middle Age, and Old Age is that those populations with a high proportion of youth have a greater tendency to increase. Table V shows this trichotomy for the Yao with the same material for some other populations shown for comparison. Where the gross reproduction-rate is known for the period shown in the table, this is included.

At any one time a certain proportion of the population is absent from the area, usually at some labour centre. Hence the proportions of the population are distributed abnormally. In all there appeared to be a total of sixty-three men, women, and children absent from the hamlets, who would otherwise have been living there. Hence in Table V these have been included in the totals in the 'Yao with absentees' proportions.

[1] A disease of this sort is believed in by many Central African tribes. Among the Nyanja-speaking peoples it is known as *ziwipile*.

1: Tew E-4 (no date) 1950 FT7 Yao FT7

Birth

Birth takes place in the bush, some distance from the hamlet, in the presence of 844
female relatives of the woman and of her husband. If the child is stillborn, or miscarried,
it is buried in the bush. The husband and wife must abstain from sexual intercourse [845]
for some months, until a special ritual intercourse is performed. A man who breaks
this taboo is liable to contract a fatal disease, *kwassaga*. Difficult births are attributed 845
to: (*a*) a curse spoken by a matrilineal relative—this is made effective by the intervention of the ancestors, and to remove it it is necessary to perform a rite making clear that no malice is borne; (*b*) the adultery of the woman or her husband, in which case confession will save the woman from dying; and (*c*) sorcery.

If a child is born alive it is brought to the hut of the mother or one of her female 844
relatives, where it is secluded until its naming ceremony, about six days later. Only
after the naming is the child considered to be a member of society. A second child 852
should not be born while the first is still suckling, i.e. for about two years. When the child is about four or five months old it is ritually immunized against the dangers of sexual activity, and the parents may resume relations. Elaborate magical precautions
are taken to ensure the child's survival. Children sleep with their mother, the boys until [513]
they are old enough to go to the boys' dormitory, and the girls until marriage.[1]

Initiation

The yearly initiation ceremonies, *wayago*, are the principal cultural institution of the 881
Yao. That for the boys, *lupanda*, is the most important, and may only take place under
a chief or superior village headman, whereas a girls' initiation ceremony may take 852
place under an ordinary headman. The right to hold a boys' initiation ceremony there-
fore becomes a mark of status which is jealously disputed.[2] The right is expressed as [554]
'having a *cinela*'. A *cinela* is the small basket in which the special sacrificial flour is carried.

Yao carry out initiation between the ages of seven and eleven, whereas generally in East Africa it is postponed until puberty.[3] In response to requests from the headmen the chief appoints the time and place of the boys' initiation ceremony for a group of villages. It is held at the end of the dry season, before the bush is burned. Each initiate is accompanied by a sponsor, *nkumwi*, who may be a brother, uncle, or friend. Before they set out for the place appointed to be *lupanda*, they all assemble before the chief to be anointed with millet-flour specially prepared by his head wife. The word *lupanda* refers to a forked stick over which the sacrificial flour is poured. This stick is planted at the place of assembly, the *masakasa*. The boys, their sponsors, and the master of ceremonies, *m'mirira*, are accompanied with dancing as far as *masakasa* by their friends. The next day the initiates go to a spot in the bush, where the circumcision (formerly only an incision) is performed, and remain in the bush school, *ndagala*, for about two months, until the wounds are completely healed. The Yao circumcision rite is said not to have been introduced by the Arabs.[4]

During these weeks the boys are subjected to rigorous discipline and instructed in various skills and tribal lore. They sleep in long dormitory huts, with partitions dividing the boys of different villages from each other. The chief appoints the day for

[1] Warner, 1906, pp. 140–3.
[2] Stannus and Dewey, 1913, p. 119.
[3] Duff, 1903, p. 312.
[4] Livingstone, 1874, p. 81.

2: Mitchell E-5 (1946-1949) 1956 FT7 Yao FT7

adjusts itself to the changes in its composition. At this point I wish only to indicate how the differentiation among the various segments of a matrilineage is reflected in the way the members site their huts in a village.

The Segmentary Process

The segmentary tendencies within the lineage are countered by unifying forces, but the cleavages between the lineage sections show up at the slightest provocation. Once the cleavage starts it widens rapidly and charges of sorcery become more and more frequent between the two sections until eventually one moves out to found a new village. A cleavage of this type has been developing in Cikoja village for the last eight years. When I left the field in 1949, talk of migration was in the air but it had not yet happened. I summarize the major events which led to the present situation.

The cleavage first manifested itself in 1942 when Bt. Mbwana (F2)[1] fought with her mother's younger 'sister' Ayesi (E8). These two were pounding at the same place in the village and Bt. Mbwana took Ayesi's flat sifting basket. She retained it for about four days without telling Ayesi that she had it. One day Ayesi saw it at the pounding point and asked Bt. Mbwana where she got it. They had a few words about it and Bt. Mbwana returned it and thought no more of it. She was pregnant at the time and was confined about a month later. It was her fifth child but she had a greatly prolonged labour. After labour had been going on for some hours, Cilimba (F1), her eldest brother, thought that there must be something wrong and sent his two younger brothers, Kausi (F3) and Gwili (F4) to a diviner. The diviner indicated that the cause of the difficult birth was that her 'younger mother' Ayesi was bearing her malice,[2] and advised that Ayesi should blow water from her mouth and declare that she bore no malice. Kausi and Gwili returned and went to Bt. Amisa (E4) who was Ayesi's elder sister and told her what the diviner had said. Bt. Amisa did as she was advised and fetched Ayesi to the door of the hut in which Bt. Mbwana was lying, and made her confess. The child was born immediately. After a week Cilimba and Kausi brought a complaint to the village headman Cikoja (E7). They accused Ayesi of trying to kill their sister. Cikoja sent a message to

[1] The reference numbers refer to the genealogy in Appendix D.

[2] Difficult labour is usually assumed to be due to adultery, but it may also be due to sorcery or malice. See p. 138, and Chap. VII, p. 185.

2: Mitchell E-5 (1946-1949) 1956 FT7 Yao FT7

613 578 845 683

his eldest uterine sister's first-born and second-born sons, Amidu (F18) and Kanyenga (F19), to advise them of this dispute, and told them that they would have to assume responsibility for the actions of their mother's younger sister, Ayesi. At the same time he sent to a neighbouring village to call in an unrelated man to act as arbitrator in the dispute. There was much argument and eventually the arbitrator awarded 15*s.* to be paid by Cikoja as leader of the junior lineage section to Cilimba as leader of the senior section. Amidu and Kanyenga found 10*s.* between them and gave it to Cikoja to give to Cilimba. The other 5*s.* they said they would try to find and pay later.

This payment formally settled the dispute but the tension was near to the surface. Amidu and Kanyenga said that there was separation in the group now that they had started to eat money. They were not wrong. Ayesi was pregnant and near to confinement. When she was confined her labour was as difficult as Bt. Mbwana's (it was also her fifth confinement). When her birthpang confusions seemed to be unavailing Bt. Bwana Isa (F16), her elder sister's daughter, went to Kanyenga to tell him that their 'younger mother' was having a difficult childbirth. Kanyenga remarked that she had had many children before and had not suffered, so that there must be some reason for her difficulty. Then Kanyenga and his sister went to Ayesi's husband's sister's hut[1] to find a representative to go with them to a diviner. When they got there Ayesi's husband's sister told her son to accompany her brother's wife's representative to the diviner. The diviner indicated that the cause of the prolonged birth was the malice felt by Bt. Mbwana because the rest of the compensation awarded had not yet been paid. He said that the only thing to do was to call Bt. Mbwana and to get her to blow water from her mouth at the hut door where Ayesi was confined. Bt. Amisa went to find Bt. Mbwana and made her do this. Immediately Ayesi delivered a stillborn child.

The next morning Amidu and Kanyenga went to Cikoja and blamed him for the stillborn child.[2] Cikoja called Cilimba to listen to the complaint. Ayesi was inconsolable. She said that she had blown water for the sake of Bt. Mbwana who to-day had a child, whereas she was mourning her child. Once again Cikoja called in outsiders to act as arbitrators and the members of the two segments gathered to settle the dispute. At the end of protracted wrangling

[1] Ayesi was married to her MMMBD5 (Kanili (D33)), whose lineage lived in another part of the same village. See genealogy and hut count in Appendix D.

[2] Cikoja is a representative of his lineage even to the lineage members. This accusation simply means that the blame lies within the lineage.

2: Mitchell E-5 (1946-1949) 1956 FT7 Yao FT7

the arbitrators awarded 30s. compensation to be paid by Cilimba to Cikoja, less 5s. owing. This money was to be paid to Ayesi in compensation for the loss of her baby. Ayesi, however, refused to accept the money because she said she wanted to have her baby. The matter now became an inter-segment affair and Cikoja, Amidu, Kanyenga and Kaifa (F36), the son of Ayesi, with Bt. Amisa had a meeting on what to do. Ayesi was quite adamant about it. There was nothing to do but to drop the matter, and the state of tension between the segments remained as it was before.

The next incident occurred in 1943. Mpulula, the husband of Bt. Amisa, had some goats. One day two of them strayed on to the verandah of Bt. Madi's hut. Bt. Madi (F10) was the daughter of Asuna (F2) and a member of the senior lineage segment. One of the goats nosed its way into a basket of flour that was lying under the verandah and started to eat it. Bt. Madi came out and picked up a log that was lying nearby and threw it at the goat. It broke the goat's leg and the goat had to be destroyed. The owner, Mpulula, who was watching at that moment immediately rebuked the woman. He went and reported the matter to Cikoja and he sent a message to Mpulula's marriage surety who sent back to say that they would meet at Chiwalo's hut the following morning. The arbitrator in the case finally decided that the correct action should have been to take the goat to the owner and to lay a complaint against him. As it was he had to award compensation of 30s. to be paid to the owner of the goat. Mpulula, however, refused to take the money. He argued that although the goat was his, so was the offender.[1] He said that he was afraid of sorcery so he would take a token amount of 3s. only. Cikoja gave him this.[2]

A few months later the eldest child of Bt. Bwana Isa (F16) suddenly fell ill and died.[3] Kanyenga, Kaifa and Mnusa went to the diviner. Kaifa, the son of Ayesi, went as the headman's representative. Kanyenga went as the warden of the sorority-group, i.e. the child's mother's brother. Mnusa was the marriage surety of the child's father. Kanyenga consulted the diviner who indicated that Kanyenga's mother Bt. Amisa was responsible but that she was not a sorceress. Sorcery, he said, was introduced by an unknown person who was using Bt. Amisa's grumbling as a screen. Kanyenga refused to accept the finding of the diviner, saying that his mother had never been 'caught'

[1] He wife's collateral sister's child he also calls 'my child'.

[2] Mpulula is a stranger in the village and in this situation Cikoja represents both segments to Mpulula, even though the senior segment is guilty.

[3] Sudden illness, called *chisese* or 'the hammer', is believed to be without a doubt due to sorcery.

2: Mitchell E-5 (1946-1949) 1956 FT7 Yao FT7

rationalized in the Yao theory of conception.[1] They believe that after intercourse the semen clots and embeds itself in the womb. From this the child develops and is nurtured by the mother until it is due to be born. Subsequent acts of intercourse add semen to the body of the child and make it fat. Semen from other men may be used, too, to feed the child in its intra-uterine life, but its body and blood are derived from the semen which first clotted. In Yao opinion there can be one father only.

Not all acts of intercourse lead to impregnation because sometimes, for various reasons, especially in immature women, the semen fails to clot. There is therefore, to the Yao way of thinking, some difficulty in determining the 'father' of a child. This difficulty is met by the belief that the intra-uterine child in some way knows about the doings of its parents and in particular knows who its father is. It therefore refuses to be born unless its father is recognized.[2] Hence if a child is born without undue puerperal complications it is assumed to be the offspring of the man who is currently living with its mother. If labour is prolonged, however, the relatives call for confessions (*kupaca*) from both husband and wife. The husband's confessions are usually formal and simple. The wife's confessions on the other hand are detailed and complete. She confesses the name of an adulterer, and her midwives, including the husband's sisters as his witnesses, wait for the next birth-spasm. If the child is not born at this spasm she is told to confess again. Only after she has confessed to a lover whom the Yao assume to be the genitor will the child eventually be born. After this the aggrieved husband summons the adulterer to court and he is made to accept the fatherhood of the child.

The act of formally accepting the paternity of a child, which is also done when a woman has a child out of wedlock, confers rights of two types on the child. The first set of rights is directly economic and physical. The father is expected to give the mother salt, money for relish, and cloth to help her rear the child. But this side of a father's duties to his child ceases as soon as another man marries the woman. The new husband then takes over the

[1] I have dealt with this more fully in *Marriage among the Machinga Yao*.

[2] It also refuses to be born for other reasons, but the first considered is always the adultery of its parents. See p. 138.

3:Stanner D-5 (ca. 1912) 1922 FT7 Yao FT7

or a girl who has just returned from Chiputo must not touch the child, as it is said, "Her body is hot and would give fever to the child." To guard against such a happening, some "alosa" woman, after handing some beads to the mother, will ask to be allowed to take the infant. This indicates that should it sicken, the beads will pay the medicine-woman who comes to cure it. The mother and baby are simply washed in water and are not treated with medicine, unless meconium has been voided before the child was delivered.[1] If the infant dies before it is presented to the outside world, it is disposed of in the same way as a stillborn child, i.e. buried in the ash-heap. About the tenth day, the baby is adorned with a girdle of beads and two little pieces of stick obtained from a medicine-woman to make the infant grow fat.

The length of time during which the father and mother refrain from cohabitation after the birth of a baby varies greatly according to circumstances. Four months is probably a minimum, while two years, during which the woman suckles the child, is the common interval. After the first coitus, the man and woman wash themselves and the baby is bathed in the same water to prevent any ill coming to it.

Suckling often continues much longer than two years. If the mother dies, the child may be suckled by the grandmother, an aunt, or some other woman, but the breasts must first be treated with medicine or the child would die.

A child born breech first is called *mlungu*, a word which is also used to denote a variety of domestic fowl which always has the appearance of having its feathers ruffled. A child who dies before the father and mother have resumed sexual relations is buried in a grave-yard apart from that of adults. The grave, dug with sticks, not hoes, is very shallow, and when it is filled in, a heap of stones is made above it. Only women attend the burial. A deep grave would cause the mother to go on losing children at an early age. The body of such a child is called *litawa*, "hyaena."

A woman dying undelivered is placed in the grave in the usual way and then, before filling in the earth, one of the grave-diggers descends into the pit, cuts through the enveloping shroud, and incises the abdomen. One end of a long bamboo stick or reed is inserted in the incision and the other end is brought *out to the surface of the grave*. If this were not done, "many would die in childbirth."

Twins are not killed by the Yao but are well treated and always cared for equally. They are given similar clothing and food.[2] There is a story that the mother of Nkwamba,

[1] Chinyanja, vide infra, p. [illegible].

[2] H. S. Worsnop, 'Among the Congo Cannibals, by John H. Weeks, London, 1913, a review,' (Man, vol. 14, no. 58, 1914, p. 101).

I take this opportunity of referring to Miss Worsnop's review in which, speaking of twins, she says, "They are always among the Anyanja given the names *Mwpili* and *Kyamo*." *Mwpili* in Chinyanja refers to a kind of musical instrument and the Chiyao meaning is "measured pulse." *Kyamo* is a Chiyao word which certainly means "the lamb." It is sometimes used of the second born twin but does not occur in Chinyanja. I have never heard of twins either among the Wayao or the Anyanja spoken of by these names. A similar custom that first born on the right arm and the second born on the left, but, as far as I know, she does not give a duplicate greeting nor make a habit of eating equally with both hands.

3:Stannus D-5 (ca. 1912) 1922 FT7 Yao FT7

845 one of Malungu's men died, after giving birth to quintuplets, some thirty years ago. Deformed children are buried alive. A large number of children is always hoped for and where polygamy is practised, some families are of considerable size, although the mortality [165] among young children is very high. It is, of course, very difficult to state the child-bearing period among natives. It does not start so early as is commonly supposed, and I think the menopause is found within about the same limits as among Europeans.

764 *Death.* Natives of Nyasaland live to a good old age. That such is not the case I have found to be one of the many fallacious beliefs concerning natives which should be relegated 165 to the realm of exploded theories, as I have pointed out elsewhere.[1]

Death in old age is recognized as a natural event but apart from this, all sickness and [764] death were formerly and are still to a large extent looked upon as the result of the machinations of some person, an idea which forms the outstanding feature in their belief in witchcraft, usual.[2]

763 Here I shall mention the ordinary customs in the case of death. During the last hours of a mortal illness, a man is tended by his wife or wives; the head wife sits constantly supporting his head on her lap or against her breast. A woman is similarly tended by her mother, sisters, and friends. As unconsciousness sets in and the extremities become cold, they say, "His spirit has gone and only the heart remains alive."

The native does not like the idea of lingering on and a man on his death-bed will say to his sons, "Now watch me that I die quickly." He may take medicine to help him over that time or he may give his sons instructions as to what to do. Should a man linger unconscious for a long time, friends will ask his sons, "Did he give you any instructions?" If he has done so, the sons will then carry them out. This perhaps consists of bathing themselves in medicines left by their father, while they stand on the roof of his house. Sometimes, the natives say of a lingering case, "Ah, perhaps he has eaten of a tortoise's heart!" [805] knowing the phenomenon of the tortoise's heart and believing that by partaking of it, the same property can be conferred on the heart of a man.

764 When death is manifest, the body is covered with a cloth by a brother, a son, or some other person in attendance. The eyes are closed, the mouth shut, and at the present time, [197] the body straightened out. This, however, is a recent practice copied from the Anyanja, Europeans, and Mohammedans.

764 News of the death must be sent to the chief, and a messenger goes to his village where the chief and his people sit in the village open space. He carries a fowl in his hand. The 203 present of a single fowl always denotes bad tidings. One of the chief's men, seeing the stranger approach with the single fowl, will jump up and take the bird. He is joined by the others and they go away to the cross-roads where they kill the fowl, pluck it, cook it and eat it. In the meantime, the messenger delivers his news to the chief who will produce from his house about eight yards of white calico; if the deceased has been a much respected

[1] Hugh S. Stannus, "The life-span of negroes", (Lancet, April 11, 1914, p. 1022). [2] Vide infra, p. 266.

3:Stannus D-5 (ca. 1912) 1922 FT7 Yao FT7

775 setting out on a journey may ask the intercession of his deceased father to assure his safe conduct.

The spirits of the dead are in general said to dwell "above." They haunt the graveyard or visit the scenes of their life, and may be associated with natural objects or with certain animals, into which they are supposed to enter temporarily. Thus a dead man's spirit will visit the earth mound which marks the site of his old house in the village. The spirits of headmen are often thought to haunt the big trees of the village open space; such trees are held sacred for this reason. Some time ago in the old village of the chief, Malemya, a party of women cut down one of these trees for firewood, ignorant of its sacred character. With the crash of the falling tree, they became frightened, and one of the present Malemya's wives came upon the scene, predicting all kinds of evil to follow unless reparation were made to the insulted spirits of the dead chiefs. The remains of the tree lie there to this day, untouched except by natural decay.

To quote another example, near a bathing pool called *japwali* (from *ku-japa*, to bathe, and *wali*, the initiates) where boys bathe after initiation, on the Domasi river, there is a small cataract whence a cloud of spray rises and a continued rumbling sound comes forth. Here, the old men say, you can hear the drumming of the spirits, while you may see pythons and the crowing cobra in whose bodies the spirits live.

As I have already mentioned, the spirit-world so far as the native has speculated on the problem is "above" in a semi-materialistic heaven. If questioned closely, the phrase "I do not know" will figure largely in his replies. He will not say there is any "marriage or giving in marriage." If a child dies, they often say, "So-and-so (some deceased person) wants a water-carrier." Indeed they often use a phrase under the circumstances identical with an English expression, "They are calling away the children."

Natives attribute to the spirits of the dead the power to partake of anything on this earth, such as food. They have no exact ideas with regard to animals and what happens to them when they die. They will not tell you that an animal has an *mzimu* but at the same time, a goat is often killed at a funeral, with the remark, "The goat will follow the dead man." The goat's meat will be eaten by those assisting at the funeral; hence there is the suggestion of the idea that animals' spirits do go to the spirit-world. [825]

In referring to the spirit-world, the native generally uses the word *ku-mulungu*, and here we have the second element in their religious beliefs, namely a supreme being; *ku-mulungu* means at the place of or with *mulungu*, the supreme being. *Mulungu*, however, takes a very secondary place to the *mzimu*. He is referred to only in a general way. In answer to such questions as why has a woman an albino child born to her, she will say "*Mulungu* made it so"; in fact in reply to many questions to which the native has no answer, he will use practically our English phrase, "Oh, God knows!" and with about as much meaning. [845]

To *Mulungu* is ascribed the sending of the rain, but apparently he has no part in giving good crops or causing a plentiful harvest, neither has he any direct interest in man's affairs,

ndembo, a woman who is pregnant for the first time;[1] *kacwabere*, a woman who has one or two children; *mjiwabere*, a woman who has three or four children, and lastly, *ndabwa*, a woman who is past child-bearing age. 554 584

The information which I have been able to collect on abortifacients and contraceptives suggests that they are not used by married people merely to prevent their having more children, but that they are used by people who wish to avoid pregnancies which would be embarrassing, for example, by a woman whose husband is a labour migrant. To what extent the abortifacients and contraceptives are efficacious I cannot say; some, I know for certain, rely on a magical principle, for example, the medicated cord worn by a man during intercourse. On the other hand, the abortifacients taken orally may have some active ingredient. 842

A barren woman or an impotent man is regarded with some embarrassment and the marriage sureties (*arisamangowe*) of a childless couple will go to considerable trouble and expense consulting diviners and leeches in an attempt to make their wards productive. Childless couples are regarded as not fully adult and are treated in a patronizing way by those who have borne children. Since a man may marry other wives, barrenness in a woman is a cause of sorrow to her husband, but is not in itself a ground for divorce. Where the man is impotent, however, the woman may divorce him on this ground, though she usually takes a paramour and forces her husband to an action for damages which automatically leads to a divorce because it is the usual practice in these cases for the court to ask the woman if she wants to be divorced from her husband. [885] [554] [586] [837] [694]

In contrast to the satisfaction shown at the birth of a child is the sense of awe evinced when a child is still-born or the woman miscarries. The Yao do not distinguish between still-births and abortions, both events being known by the word *kwasanga*. This is a verb and refers to the process of abortion; there is no term for the dead foetus itself. I made no attempt to enumerate miscarriages and still-births because they are supposed to be due to breaches of sexual taboos on the part of the husband and wife, and interviewees were naturally reluctant to mention them. Miscarriages and still-births are greatly feared, and the woman is considered to be in a very dangerous condition until she and her husband have carried out a ritual purification. Should a man have intercourse with a woman who has miscarried and not yet been purified he will contract a disease called *kwao* which is believed to be invariably fatal. Still-born children or aborted foetuses are buried in a hole dug with sharpened sticks in the bush by the women, whereas children who are born alive and die afterwards are buried in the graveyard in graves dug by men with hoes. The burial spots of still-born babies or aborted foetuses are marked with a stone or broken pottery, since it is believed that to step on them will induce an illness. 845 [783] [753] [766]

The concern of the interested kin-groups is shown in the child-birth procedure. Birth normally takes place in a hut in the presence of the older female relatives of the woman and the female representatives of the man. The husband's representatives are necessary because the Yao, like many other Central African peoples, believe that an adulterine child will not be born to the woman unless she confesses (*kapwa*) the name of the genitor. If she persists in concealing the identity of the genitor, they 844

[1] *ndembo* = elephant, hence ivory. The terms *ditibe* and *ndembo* here both refer to the ivory bands traditionally worn by the women in the pregnancy initiation ceremony. [192] [861]

1: Tew E-4 (no date) 1950 FT7 Yao FT7

return to the *lupanda*, where the initiates are welcomed by their friends. An essential part of the ceremony which takes place at this stage is the exhibition of animal shapes made by the *m'sicira*, with mounds of earth outlined in flour. These animal shapes differ from lodge to lodge. On the last night before the return to the village the initiates undergo a ceremonial bathing, each boy being carried to the stream by a woman, who thereafter is addressed as 'elder sister'. Finally, with new names, and freshly oiled and decorated, they march to the chief's village to be redeemed by him from the *m'sicira* with gifts of cloth. After initiation it is a deadly insult to call a boy by his child-name. All who pass through initiation together consider themselves bound by mutual obligations of hospitality.[1]

Girls' initiation takes place in three stages. First, there is *ciputa*, the general initiation before puberty, which corresponds to the boys' *lupanda*. It takes place at the same time of year, and though it lasts for less than a week, its conclusion is celebrated at *lupanda* jointly with the conclusion of the boys' initiation. A hut is built in the bush, like the long dormitory of the boys, and four days are spent in dancing and singing. Each girl (aged about eight years) is accompanied by a sponsor, a woman friend who continues to be her mentor during subsequent rites, and who assists in giving the girl instruction in her womanly duties. At the end the girls are bathed and anointed, dressed in new clothes, and each is carried to *lupanda* by her sponsor. Here they prove their skill in dancing and receive gifts from their friends. Ritual defloration follows the *ciputa* initiation.[2] Among Mohammedans, clitoridectomy used to be performed by a woman operator, but, it is said, was discontinued in about 1903 on account of the heavy mortality.[3]

After this first general celebration, first pregnancy and first birth are the occasions of separate rites for each girl. According to some informants there were once two ceremonies connected with pregnancy. One, for the young married men whose wives had not yet conceived, used to take place at the same time as *ciputa*; each man was attended by a woman sponsor not his wife, given good advice, and put through various tests of manhood. Mitchell does not confirm the present existence of this ceremony, but in the old days if a man was betrothed or married to a child going through her *ciputa* he had to accompany her.

The *liniwo* ceremony takes place when a young married woman quickens with child for the first time.[4] The woman, with her sponsor and the married women of the neighbourhood, went out in procession for a ceremony of singing and dancing and instruction to the young couple, followed by a feast. Nowadays no men are allowed to attend *liniwo*. A child born of a woman who had not undergone this rite used to be buried alive; nowadays her *anyene mbumba* is charged by the chief.

Finally, six days after the first child is born, its naming ceremony forms a last initiation rite for its mother. The husband is formally led into her hut by her sponsor and the married women of the neighbourhood, and the child is taken out for the first time to the accompaniment of feasting and dancing.

Most Yao men and women act as sponsors of initiates at least once, and all parti-

[1] Sources for boys' initiation: Stannus and Davey, 1913; Werner, 1906, pp. 124-6; Stannus, c. 1910, pp. 247-63; Hoekel, 1933, pp. 19-25; Johnston, 1897, p. 409; Weule, c. 1909, p. 309.
[2] Stannus, c. 1910, p. 234.
[3] Ibid., c. 1910, p. 256.
[4] Ibid., c. 1910, p. 274; Hoekel, 1933, p. 25, *ceila ie ciumbu* (belly).

3: Stannus D-5 (ca. 1912) 1922 FT7 Yao FT7

843 *Pregnancy and childbirth.* An event of the first importance in the Yao world is the
842 first consumption or rather the "quickening" with the first child, *Lilisse*; this is described below, together with the other ceremonies of the *Unyago*.[1] After the ceremony of *Lilisse*, the period of waiting until the birth of the child passes without further event. A point of medical interest is that native women suffer in many cases from "morning sickness" during pregnancy. That they may have perverted appetites is also recognised, grain husks
[71] and crabs being among the things most commonly desired. As the Anyanja,[2] the Yao believe that the child develops from the semen of the male, although the growth of the child is in some way connected with the mother.

844 When labor commences, the woman retires to the bush a few hundred yards away from her house, attended by some friend, seldom a midwife, and never by her own people, though the mother and the mother-in-law will probably be near the spot. If labor is not completed by evening, they return to the house and the birth may take place actually within its walls.
[71] The attitude assumed in labor is the same as that adopted by the Anyanja,[3] the patient semi-reclining in the arms of another woman who sits behind, grasping her belly. The vulva is smeared with a decoction made from the bark of the *wposo* tree as a lubricant, but no other help is given. *Kwahuli* is the name given to the place of confinement; *w'huli* means the house where the woman remains for a period after the confinement. The Yao recognise the protruding bag of amniotic fluid and call it the "oil-gourd". "*Chiasi chikasiche?* (The oil-gourd, has it broken?)." They wait until the placenta is delivered before dividing the cord. This is done with the sharp edge of the outer covering of a maize stalk or sugar cane; a knife is never used. The section is made near the placenta or half-way between it and the child, after tying the proximal end with a bark string.

The woman who receives the child at birth is the *ambusanga*, friend or godmother. If the infant is born in the bush, she carries it back to the house whither they go as soon as *labor is completed*. The mother herself, unless she is very ill, goes out shortly afterwards and buries the placenta in the ash-heap, using a stick to dig the hole, never a hoe.

● 846 After the birth, the mother and child must remain in the house until the umbilical cord separates, during which time the husband does not enter, though he may come to the door to look in at the child.

The day on which exit from the house is made, the floor is entirely replastered with mud.
[852 The baby's head is shaved and a cross is made upon it with *upwa*, a kind of red pigment.
553 The husband may then receive the child and in the case of a first-born, it is he who gives it
302] its name; other children may be named by the *ambusanga*, the mother, or the aunt.

When the mother leaves the house to appear in public, the *salanga* who put her *lilisse* on,[4] removes it.

So long as the infant remains in the house, care must be taken as to persons allowed to handle it. A woman who has recently had a menstrual period or coitus with her husband,

[1] Vide infra, p. 274. [2] Stannus, op. cit., p. 310. [3] Ibid. [4] Vide infra, p. 274.

3: Stannus D-5 (ca. 1912) 1922 FT7 Yao FT7

or a girl who has just returned from *Chipuchu* must not touch the child, as it is said, "Her body is hot and would give fever to the child." To guard against such a happening, some "clean" woman, after handing some beads to the mother, will ask to be allowed to take the infant. This indicates that should it sicken, the beads will pay the medicine-woman who comes to cure it. The mother and baby are simply washed in water and are not treated with medicine, unless meconium has been voided before the child was delivered.[1] If the infant dies before it is presented to the outside world, it is disposed of in the same way as a stillborn child, i.e. buried in the ash-heap. About the tenth day, the baby is adorned with a girdle of beads and two little pieces of stick obtained from a medicine-woman to make the infant grow fat. 846 [845 766] [856]

The length of time during which the father and mother refrain from cohabitation after the birth of a baby varies greatly according to circumstance. Four months is probably a minimum, while two years, during which the woman suckles the child, is the common interval. After the first coitus, the man and woman wash themselves and the baby is bathed in the same water to prevent any ill coming to it. 833

Suckling often continues much longer than two years. If the mother dies, the child may be suckled by the grandmother, an aunt, or some other woman, but the breasts must first be treated with medicine or the child would die 853

A child born breech first is called *salanga*, a word which is also used to denote a variety of domestic fowl which always has the appearance of having its feathers ruffled. A child who dies before the father and mother have resumed sexual relations is buried in a graveyard apart from that of adults. The grave, dug with sticks, not hoes, is very shallow, and when it is filled in, a heap of stones is made above it. Only women attend the burial. A deep grave would cause the mother to go on losing children at an early age. The body of such a child is called *hiwee*, "hyaena." 845 766

A woman dying undelivered is placed in the grave in the usual way and then, before filling in the earth, one of the grave-diggers descends into the pit, cuts through the enveloping shroud, and incises the abdomen. One end of a long bamboo stick or reed is inserted in the incision and the other end is brought out to the surface of the grave. If this were not done, "many would die in childbirth." 844 766

Twins are not killed by the Yao but are well treated and always cared for equally. They are given similar clothing and food.[2] There is a story that the mother of Nkwamba, 845

[1] Chinguru, vide infra, p. 286.

[2] 'T. A. Worsat, 'Among the Congo Cannibals, by John H. Weeks, London, 1913, a review,' (Man, vol. 14, no. 14, 1914, p. 14).

I take this opportunity of referring to Miss Worsat's review in which, speaking of twins, she says, "They are always among the Angonde given the names *Mapali* and *Nyama*." *Mapali* in Chiyonde refers to a kind of musical instrument and the Chiyao meaning is "unnatural pains." *Nyama* is a Chiyao word which certainly means "the back." It is sometimes used of the second born twin but does not occur in Chiyonde. I have never heard of twins either among the Wayao or the Angonde spoken of by these names. A mother carries the first born on the right arm and the second born on the left, but, so far as I know, she does not give a duplicate greeting nor make a habit of using equally with both hands. [114]

4: Stannus D-5 (ca. 1909) 1910 FT7 Yao FT7
Ngoni FR5
Maravi FR4

Women wear their cloth folded across the upper level of the breasts from right to left. Men and women often have two cloths, one over the loins, only the second fastening over the chest. M Y N 291

A menstruating woman also wears a small piece of calico corresponding to a diaper supported by string round the waist.[1] The same thing is worn after child-birth for six months. Angoni women always wear them. M Y N [841] [846]

The Angoni, Chipeta wear their cloth toga-fashion, carrying a fold of cloth on the left arm. An Angoni chief wears three such, blue, white and coloured, the first outside, the last next to the skin.

The material used is now practically everywhere European-made calico, formerly bark cloth only was used by Nyanja, though weaving had been accomplished by Angoni, where skins were and are used as articles of clothing. M Y N [246]

There is nothing to distinguish men of various grades, etc. Fashion at the present time is very capricious—some patterned cloth being much worn one month will have no sale a month later; this is true both of men and of women.

There is no class uniform, and no "costumes" are worn save in dancing (*q.v.*).

Men are now seen wearing a piece of calico twisted up on the head in turban form, a custom lately introduced from the coast—the only indigenous head-gear is the string skull-cap worn by Angoni widows. N [589]

Under the heading of dress must be included the bead aprons worn by Yao and Angoni. Among the former the use of this garment is restricted to the women, who in the house sometimes wear nothing else; among the Angoni the children often have them and no other clothing.

Sandals are sometimes made of skin and fastened on the foot with a thong when crossing thorny country.

Among Angoni the *mawale* only used to be worn; this is a small hard-cased fruit which was hollowed out and worn just covering the glans penis. N 291 824

FOOD, ETC.

The staple food throughout the country is either maize or rice, the latter only at various spots on the lake shore where it can be grown. Two fixed meals per diem are taken, at 9 or 10 a.m. and again at 6 p.m.; each consists of *nsima* porridge made from maize flour or rice flour or boiled rice with some *ndiwo* (relish) to which the salt is added. At odd times the native will eat anything that opportunity offers—a piece of cassava root, a boiled sweet potato, a roasted maize cob, etc. M Y 262 [264]

The *nsima* is made by stirring flour (*ufa*) into boiling water till a stiff paste is formed; this is kept cooking for five minutes and then scraped out with a wooden M Y 252

[1] Diaper or *mikoto*: a woman keeps five or six; they are never put away in baskets but always hung up; a woman changes every time she bathes, using two or three per diem; they may be given to a female child to wear, but are then not worn again by a woman.

6: Mitchell E-5 (1946-1947) 1949 FT7 Yao FT7

844 believe that she will die. The man's representatives are therefore able to establish the child's paternity from the birth-pang confessions of the woman.

●846 The child is kept in the hut where it was born, for six or seven days, while the umbilical cord dries and falls off. During this time (*luuli*) the child is unnamed, and [553] it is named only when it is taken out of the hut. Should it die during this period of seclusion it remains unnamed and is referred to by a special term (*litaya*, pl. *mataya*). [128] I have therefore been able to enumerate live births by means of the distinction made between miscarriages and still-births (*kwatanga*) and children who lived long enough to be referred to as *mataya*. After the birth of the child the woman may not have 846 intercourse for four or five months. To do so would be to endanger the life of the (854) child with a disease called *ndaka*,[1] which is contracted by a sexually inactive person 834 when he comes into contact with a sexually active person. The husband may have intercourse with a second wife, but must take care to medicate himself so that he does not endanger the life of his child. When the child is about 4 or 5 months of age the parents perform ritual intercourse and medicate the child against the mystical dangers of sexual activity; sexual relations are then resumed.

834 The Yao say that a second child should not be born while the first is still being [853] suckled. Since lactation continues for about two years I am uncertain whether monogynists remain continent, as they say they do, or whether *coitus interruptus* is 464 practised. It is quite usual for husbands to become labour migrants when their 842 children are still very young. I have known women to write to their husbands who are away working and tell them to return because their children have 'grown', i.e. have been weaned. Labour recruiters had difficulty in recruiting men immediately after the soldiers had been demobilized at the end of the war, because the women objected, saying that they had remained childless long enough and the men must first wait until children were born. However, actual examination of birth-dates [163] shows that children are sometimes born within a year of one another and sometimes there are quite big gaps. The two-year gap between children is probably an ideal which few attain.

5. The Estimation of Fertility

(a) *Sundbaerg's Age Divisions*

128 As a preliminary estimate of fertility, Sundbaerg's trichotomy of ages may be considered. The argument behind this division of the population into Youth, Middle Age, and Old Age is that those populations with a high proportion of youth have a greater tendency to increase. Table V shows this trichotomy for the Yao with the same material for some other populations shown for comparison. Where the gross reproduction-rate is known for the period shown in the table, this is included.

128 At any one time a certain proportion of the population is absent from the area, 162 usually at some labour centre. Hence the proportions of the population are distributed abnormally. In all there appeared to be a total of sixty-three men, women, and children absent from the hamlets, who would otherwise have been living there. Hence in Table V these have been included in the totals in the 'Yao with absentees' proportions.

[171] [1] A disease of this sort is believed in by many Central African tribes. Among the Nyanja-speaking peoples it is known as *tsunjile*.

1: Tew E-4 (no date) 1950 FT7 Yao FT7

return to the *lupanda*, where the initiates are welcomed by their friends. An essential part of the ceremony which takes place at this stage is the exhibition of animal shapes made by the *m'micira*, with mounds of earth outlined in flour. These animal shapes differ from lodge to lodge. On the last night before the return to the village the initiates undergo a ceremonial bathing, each boy being carried to the stream by a woman, who thereafter is addressed as 'elder sister'. Finally, with new names, and freshly oiled and decorated, they march to the chief's village to be redeemed by him from the *m'micira* with gifts of cloth. After initiation it is a deadly insult to call a boy by his child-name. All who pass through initiation together consider themselves bound by mutual obligations of hospitality.[1]

Girls' initiation takes place in three stages. First, there is *ciputu*, the general initiation before puberty, which corresponds to the boys' *lupanda*. It takes place at the same time of year, and though it lasts for less than a week, its conclusion is celebrated at *lupanda* jointly with the conclusion of the boys' initiation. A hut is built in the bush, like the long dormitory of the boys, and four days are spent in dancing and singing. Each girl (aged about eight years) is accompanied by a sponsor, a woman friend who continues to be her mentor during subsequent rites, and who assists in giving the girl instruction in her womanly duties. At the end the girls are bathed and anointed, dressed in new clothes, and each is carried to *lupanda* by her sponsor. Here they prove their skill in dancing and receive gifts from their friends. Ritual defloration follows the *ciputu* initiation.[2] Among Mohammedans, clitoridectomy used to be performed by a woman operator, but, it is said, was discontinued in about 1903 on account of the heavy mortality.[3]

After this first general celebration, first pregnancy and first birth are the occasions of separate rites for each girl. According to some informants there were once two ceremonies connected with pregnancy. One, for the young married men whose wives had not yet conceived, used to take place at the same time as *ciputu*; each man was attended by a woman sponsor not his wife, given good advice, and put through various tests of manhood. Mitchell does not confirm the present existence of this ceremony, but in the old days if a man was betrothed or married to a child going through her *ciputu* he had to accompany her.

The *litiwo* ceremony takes place when a young married woman quickens with child for the first time.[4] The woman, with her sponsor and the married women of the neighbourhood, went out in procession for a ceremony of singing and dancing and instruction to the young couple, followed by a feast. Nowadays no men are allowed to attend *litiwo*. A child born of a woman who had not undergone this rite used to be buried alive; nowadays her *anyone mbumba* is charged by the chief.

Finally, six days after the first child is born, its naming ceremony forms a last initiation rite for its mother. The husband is formally led into her hut by her sponsor and the married women of the neighbourhood, and the child is taken out for the first time to the accompaniment of feasting and dancing.

Most Yao men and women act as sponsors of initiates at least once, and all parti-

[1] Sources for boys' initiation: Stannus and Dewey, 1913; Werner, 1906, pp. 124-6; Stannus, 4, 1910, pp. 147-63; Hoskel, 1935, pp. 19-25; Johnston, 1897, p. 409; Weule, 1, 1909, p. 304.
[2] Stannus, 4, 1910, p. 159. [3] Ibid., 1, 1910, p. 296.
[4] Ibid., 4, 1910, p. 174; Hoskel, 1935, p. 25, *nalo* = *simulo* (belly).

3:Stannus D-5 (ca. 1912) 1922 FT7 Yao FT7

generous and popular, the donations may mount up to a useful sum. Dancing goes on late into the afternoon when all return to the village. 843

The man may not speak to his guardian again until after the birth of the child. The two women guardians, the *nkumusi* and the *nahunga*, as a rule cease sexual intercourse with their husbands during the same period or, at all events, during the last month before the birth of the child.

The child born of a woman who has not gone through *Lilimo* is buried alive. [847]

Chieftainship. The Yao when they migrated to their present country were headed by a number of their chiefs. These eventually settled in different areas adjacent to one another, each ruling over a considerable tract of country. The chief was supported by a number of headmen, each of whom looked after a village; the chiefs and headmen in turn being assisted by the village elders. 622 643

Often among a chief's counselors one found a number of his relatives, and sons and brothers were often made headmen. A man assuming chieftainship often had to dispose of a brother of whom he was afraid. 643

Chieftainship is hereditary, the chief's name being passed on to each successor. Succession is to eldest son of the eldest sister or a son of some other sister. Failing these, it passes to a grand-nephew. If there is no acceptable adult nephew, a full brother may succeed.

Macdonald's account of the Malemya's succession[1] is, I believe, incorrect. The old Malemya (*Nalutumbo*) was succeeded according to custom by his nephew, Kanbola who, as Malemya, was called Ndalama. Kuntaja was not a younger brother of Nalutumbo or Kanbola, but a cousin of the latter. Ndalama was succeeded by a nephew, not the eldest but the second son of a sister, the eldest having already succeeded to the chieftainship of Kuntaja was therefore ineligible. The present Malemya will be succeeded by a grand-nephew, the son of a daughter of his eldest sister, his sister having no sons. [114]

A successor inherited all the wives and slaves of the deceased chief and all his goods and chattels, guns, ivory and gardens. Any small possessions might be divided among the deceased's children and in the case of guns, those who had always used them often laid claims not to be separated from their weapons; these claims were often allowed by the new chief. 643 428

In the same way, any ordinary man's successor is his nephew, the son of a sister, who inherits all goods and chattels and slave wives, but not free-born wives, nor gardens, which go to the free wives. Stock is generally divided among the children.

Before 1891, when a British Protectorate was formally declared over Nyasaland, each chief ruled supreme. He was consulted as to the dates for *Unyago*; he directed the harvesting, etc.; he proclaimed war and generally was paramount among his people. It will be seen, therefore, that he was a busy man, but he received no direct remuneration. His wealth consisted of slaves and ivory. Slaves he obtained in warfare and as blood money. 643 [554]

[1] Op. cit., vol. i, p. 180.

2: Mitchell E-5 (1946-1949) 1956 FT7 Yao FT7

rationalized in the Yao theory of conception.[1] They believe that after intercourse the semen clots and embeds itself in the womb. From this the child develops and is nurtured by the mother until it is due to be born. Subsequent acts of intercourse add semen to the body of the child and make it fat. Semen from other men may be used, too, to feed the child in its intra-uterine life, but its body and blood are derived from the semen which first clotted. In Yao opinion there can be one father only.

Not all acts of intercourse lead to impregnation because sometimes, for various reasons, especially in immature women, the semen fails to clot. There is therefore, to the Yao way of thinking, some difficulty in determining the 'father' of a child. This difficulty is met by the belief that the intra-uterine child in some way knows about the doings of its parents and in particular knows who its father is. It therefore refuses to be born unless its father is recognized.[2] Hence if a child is born without undue puerperal complications it is assumed to be the offspring of the man who is currently living with its mother. If labour is prolonged, however, the relatives call for *confessions (kupaw)* from both husband and wife. The husband's confessions are usually formal and simple. The wife's confessions on the other hand are detailed and complete. She confesses the name of an adulterer, and her midwives, including the husband's sisters as his witnesses, wait for the next birth-spasm. If the child is not born at this spasm she is told to confess again. Only after she has confessed to a lover whom the Yao assume to be the genitor will the child eventually be born. After this the aggrieved husband summons the adulterer to court and he is made to accept the fatherhood of the child.

The act of formally accepting the paternity of a child, which is also done when a woman has a child out of wedlock, confers rights of two types on the child. The first set of rights is directly economic and physical. The father is expected to give the mother salt, money for relish, and cloth to help her rear the child. But this side of a father's duties to his child ceases as soon as another man marries the woman. The new husband then takes over the

[1] I have dealt with this more fully in *Marriage among the Machinga Yao*.
[2] It also refuses to be born for other reasons, but the first considered is always the adultery of its parents. See p. 138.

1: Tew E-4 (no date) 1950 FT7 Yao FT7

BIRTH

Birth takes place in the bush, some distance from the hamlet, in the presence of 844
female relatives of the woman and of her husband. If the child is stillborn, or miscarried,
it is buried in the bush. The husband and wife must abstain from sexual intercourse [845]
for some months, until a special ritual intercourse is performed. A man who breaks
this taboo is liable to contract a fatal disease, *kusasanga*. Difficult births are attributed 845
to: (*a*) a curse spoken by a matrilineal relative—this is made effective by the intervention of the ancestors, and to remove it it is necessary to perform a rite making clear that no malice is borne; (*b*) the adultery of the woman or her husband, in which case confession will save the woman from dying; and (*c*) sorcery.

If a child is born alive it is brought to the hut of the mother or one of her female 844
relatives, where it is secluded until its naming ceremony, about six days later. Only 852
after the naming is the child considered to be a member of society. A second child should not be born while the first is still suckling, i.e. for about two years. When the child is about four or five months old it is ritually immunized against the dangers of sexual activity, and the parents may resume relations. Elaborate magical precautions are taken to ensure the child's survival. Children sleep with their mother, the boys until [513] they are old enough to go to the boys' dormitory, and the girls until marriage.[1]

INITIATION

The yearly initiation ceremonies, *unyago*, are the principal cultural institution of the 881
Yao. That for the boys, *lupande*, is the most important, and may only take place under 852
a chief or superior village headman, whereas a girls' initiation ceremony may take *place under an ordinary headman. The right to hold a boys' initiation ceremony there-* [554]
fore becomes a mark of status which is jealously disputed.[2] The right is expressed as 'having a *ciwele*'. A *ciwele* is the small basket in which the special sacrificial flour is carried.

Yao carry out initiation between the ages of seven and eleven, whereas generally in East Africa it is postponed until puberty.[3] In response to requests from the headmen the chief appoints the time and place of the boys' initiation ceremony for a group of villages. It is held at the end of the dry season, before the bush is burned. Each initiate is accompanied by a sponsor, *nhamani*, who may be a brother, uncle, or friend. Before they set out for the place appointed to be *lupande*, they all assemble before the chief to be anointed with millet-flour specially prepared by his head wife. The word *lupande* refers to a forked stick over which the sacrificial flour is poured. This stick is planted at the place of assembly, the *masakana*. The boys, their sponsors, and the master of ceremonies, *m'mirira*, are accompanied with dancing as far as *masakana* by their friends. The next day the initiates go to a spot in the bush, where the circumcision (formerly only an incision) is performed, and remain in the bush school, *ndagala*, for about two months, until the wounds are completely healed. The Yao circumcision rite is said not to have been introduced by the Arabs.[4]

During these weeks the boys are subjected to rigorous discipline and instructed in various skills and tribal lore. They sleep in long dormitory huts, with partitions dividing the boys of different villages from each other. The chief appoints the day for

[1] Warner, 1918, pp. 140-3.
[2] Swanson and Dewey, 1915, p. 109.
[3] Duff, 1905, p. 312.
[4] Livingstone, 1874, p. 81.

1: Tew E-4 (no date) 1950 FT7 Yao FT7

return to the *lupanda*, where the initiates are welcomed by their friends. An essential part of the ceremony which takes place at this stage is the exhibition of animal shapes made by the *n'mcirw*, with mounds of earth outlined in flour. These animal shapes differ from lodge to lodge. On the last night before the return to the village the initiates undergo a ceremonial bathing, each boy being carried to the stream by a woman, who thereafter is addressed as 'elder sister'. Finally, with new names, and freshly oiled and decorated, they march to the chief's village to be redeemed by him from the *n'mcirw* with gifts of cloth. After initiation it is a deadly insult to call a boy by his child-name. All who pass through initiation together consider themselves bound by mutual obligations of hospitality.[1]

Girls' initiation takes place in three stages. First, there is *ciputa*, the general initiation before puberty, which corresponds to the boys' *lupanda*. It takes place at the same time of year, and though it lasts for less than a week, its conclusion is celebrated at *lupanda* jointly with the conclusion of the boys' initiation. A hut is built in the bush, like the long dormitory of the boys, and four days are spent in dancing and singing. Each girl (aged about eight years) is accompanied by a sponsor, a woman friend who continues to be her mentor during subsequent rites, and who assists in giving the girl instruction in her womanly duties. At the end the girls are bathed and anointed, dressed in new clothes, and each is carried to *lupanda* by her sponsor. Here they prove their skill in dancing and receive gifts from their friends. Ritual defloration follows the *ciputa* initiation.[2] Among Mohammedans, clitoridectomy used to be performed by a woman operator, but, it is said, was discontinued in about 1903 on account of the heavy mortality.[3]

After this first general celebration, first pregnancy and first birth are the occasions of separate rites for each girl. According to some informants there were once two ceremonies connected with pregnancy. One, for the young married men whose wives had not yet conceived, used to take place at the same time as *ciputa*; each man was attended by a woman sponsor not his wife, given good advice, and put through various tests of manhood. Mitchell does not confirm the present existence of this ceremony, but in the old days if a man was betrothed or married to a child going through her *ciputa* he had to accompany her.

The *litiwo* ceremony takes place when a young married woman quickens with child for the first time.[4] The woman, with her sponsor and the married women of the neighbourhood, went out in procession for a ceremony of singing and dancing and instruction to the young couple, followed by a feast. Nowadays no men are allowed to attend *litiwo*. A child born of a woman who had not undergone this rite used to be buried alive; nowadays her *anyewe mbumba* is charged by the chief.

Finally, six days after the first child is born, its naming ceremony forms a last initiation rite for its mother. The husband is formally led into her hut by her sponsor and the married women of the neighbourhood, and the child is taken out for the first time to the accompaniment of feasting and dancing.

Most Yao men and women act as sponsors of initiates at least once, and all parti-

[1] Sources for boys' initiation: Stannus and Davey, 1913; Werner, 1908, pp. 124–6; Stannus, 4, 1922, pp. 247–63; Hackel, 1935, pp. 19–25; Johnston, 1897, p. 409; Weule, 1, 1909, p. 304.
[2] Stannus, 4, 1922, p. 234. [3] Ibid., 1, 1922, p. 256.
[4] Ibid., 4, 1922, p. 274; Hackel, 1935, p. 23, calls it *cimuko* (belly).

1: Tew E-4 (no date) 1950 FT7 Yao FT7

ciputo yearly in the great initiation festival for boys and girls. Consequently as they repeat each year the lessons of their own initiation, the ceremonies are the main vehicle of Yao culture.[1]

There are also two Moslem ceremonies:

(1) *Jando*, the boys' Moslem baptism, which takes about seven days, and is usually worked in with *lupande*:

(2) *Nsondo*, the girls' Moslem baptism, which is the same as *jando*, but usually quite separate from *ciputo*. It is important that the wife of a Moslem should have her *nsondo* so that she knows how to prepare the food properly at Ramadan.

Menstrual and Other Taboos

Menstruation is held to be dangerous. A special mat is used by the woman during this time, and is rolled up and kept during the rest of the cycle. The hut is completely replastered after menstruation. Intercourse during menses leads to disease of the man. Sexual contact is dangerous to persons at certain other periods: during initiation ceremonies, during mourning, and for babies who have not been through the protective rite. The danger is thought to lie in *ndaka*, a dread disease characterized by swelling. This may be transmitted by salt in the food. Deaths are often attributed to 'salt'. Much of the significance of the mourning is that medicines are prepared which protect the mourners against the dangers attendant on sexual activity.

Burial Rites

News of a death must be sent to the chief by a messenger carrying a single fowl. The chief gives a present of calico for wrapping the body, and a goat for the burial men. These are called *anile*, neighbours unrelated to the dead, who volunteer for certain duties. They prepare the body for burial and carry it in procession to the graveyard outside the village. No uninitiated person is allowed to see the funeral. All who attend the burial are prohibited from sexual intercourse for one month. After this time the prohibition is lifted by a ceremony of beer drinking and feasting, and on the following day all fires in the village are extinguished, and then relit, and the mourners are shaved. A year later beer is brewed for a final ceremony.

For a period after her husband's death a widow is unclean, and has to be purified by ritual intercourse with a man who is paid. The widow is not allowed to remarry for two or three years. A widower leaves his wife's village, after receiving a parting gift. The widows of ordinary persons are not inherited. If a man has himself a 'name' (rank and social position), he has an heir, who inherits also the wives of his predecessor. But if the heir (the maternal nephew) has married a cross-cousin (mother's brother's daughter) he would not consider the wife's mother as his inherited wife.

Before the burial the dead man's hut used to be destroyed, together with his possessions. Immediately afterwards a consultation is held as to whether retaliatory action against sorcerers is called for. The *anile*'s duties include not only the conducting of the burial, but also the subsequent inquiry and the conduct of the second ceremony, the beer drinking, at which they shave the mourners. A man who has

[1] Main sources for girls' initiation: Hackel, 1935, p. 19; Simonse, 1, 1910, pp. 182-7; 2, 1911, pp. 169-70; Simonse and Dewey, 1913; Duff, 1903, pp. 312-13; Abdullah, 1919, pp. 18-19; Macdonald, 1882, vol. 1, pp. 125-30; Wanner, 1908, pp. 126-7; Johnston, 1897, p. 400.

3: Stanmus D-5 (ca. 1912) 1922 FT7 Tao FT7

843 *Pregnancy and childbirth.* An event of the first importance in the Tao world is the
842 first conception or rather the "quickening" with the first child, *Lilion*; this is described below, together with the other ceremonies of the *Ungaga*.[1] After the ceremony of *Lilion*, the period of waiting until the birth of the child passes without further event. A point of medical interest is that native women suffer in many cases from "morning sickness" during pregnancy. That they may have perverted appetites is also recognized, grain husks
[71] and crabs being among the things most commonly desired. As the *Anyanja*,[2] the Tao believes that the child develops from the semen of the male, although the growth of the child is in some way connected with the mother.

641 When labor commences, the woman retires to the bush a few hundred yards away from her house, attended by some friend, seldom a midwife, and never by her own people, though the mother and the mother-in-law will probably be near the spot. If labor is not completed by evening, they return to the house and the birth may take place actually within its walls.
[71] The attitude assumed in labor is the same as that adopted by the *Anyanja*,[3] the patient semi-reclining in the arms of another woman who sits behind, grasping her belly. The vulva is anointed with a decoction made from the bark of the *mpoma* tree as a lubricant, but no other help is given. *Kambali* is the name given to the place of confinement; *m'bali* means the house where the woman remains for a period after the confinement. The Tao recognize the protruding bag of amniotic fluid and call it the "*ali-guard*". "*Chimai chilawichi?* (The *ali*-guard, has it broken?)." They wait until the placenta is delivered before dividing the cord. This is done with the sharp edge of the outer covering of a maize stalk or sugar cane; a knife is never used. The section is made near the placenta or half-way between it and the child, after tying the proximal end with a bark string.

The woman who receives the child at birth is the *ambuanga*, friend or godmother. If the infant is born in the bush, she carries it back to the house whither they go as soon as labor is completed. The mother herself, unless she is very ill, goes out shortly afterwards and buries the placenta in the ash-heap, using a stick to dig the hole, never a hoe.

After the birth, the mother and child must remain in the house until the umbilical cord separates, during which time the husband does not enter, though he may come to the door to look in at the child.

The day on which exit from the house is made, the floor is entirely replastered with mud.
[852] The baby's head is shaved and a cross is made upon it with *mpoma*, a kind of red pigment.
[853] The husband may then receive the child and in the case of a first-born, it is he who gives it
[304] the name; other children may be named by the *ambuanga*, the mother, or the aunt.

When the mother leaves the house to appear in public, the *mdongo* who put her *lilion* on,[4] removes it.

So long as the infant remains in the house, care must be taken as to persons allowed to handle it. A woman who has recently had a menstrual period or coition with her husband,

[1] Vide infra, p. [illegible]. [2] Swanson, op. cit., p. [illegible]. [3] Ibid. [4] Vide infra, p. [illegible].

or a girl who has just returned from Chiputo must not touch the child, as it is said, "the body is hot and would give fever to the child." To guard against such a happening, some "clean" women, after handing some beads to the mother, will ask to be allowed to take the infant. This indicates that should it sicken, the beads will pay the medicine-woman who comes to cure it. The mother and baby are simply washed in water and are not treated with medicine, unless menstruation has been visited before the child was delivered.[1] If the infant dies before it is presented to the outside world, it is disposed of in the same way as a stillborn child, i.e. buried in the sub-kraal. About the tenth day, the baby is adorned with a girdle of beads and two little pieces of stick obtained from a medicine-woman to make the infant grow fat.

The length of time during which the father and mother refrain from cohabitation after the birth of a baby varies greatly according to circumstances. Four months is probably a minimum, while two years, during which the woman suckles the child, is the common interval. After the first colon, the man and woman wash themselves and the baby is bathed in the same water to prevent any ill coming to it.

Suckling often continues much longer than two years. If the mother dies, the child may be suckled by the grandmother, an aunt, or some other woman, but the breasts must first be treated with medicine or the child would die.

A child born breech first is called mlongo, a word which is also used to denote a variety of domestic fowl which always has the appearance of having its feathers ruffled. A child who dies before the father and mother have removed sexual relations is buried in a graveyard apart from that of adults. The grave, dug with sticks, not hoes, is very shallow, and when it is filled in, a heap of stones is made above it. Only women attend the burial. A deep grave would cause the mother to go on losing children at an early age. The body of such a child is called kisuma, "kyuma."

A woman dying undelivered is placed in the grave in the usual way and then, before filling in the earth, one of the grave-diggers descends into the pit, cuts through the encompassing sheath, and incises the abdomen. One end of a long bamboo stick or reed is inserted in the incision and the other end is brought out to the surface of the grave. If this were not done, "many would die in childbirth."

Twins are not killed by the Yao but are well treated and always cared for equally. They are given similar clothing and food.[1] There is a story that the mother of Mwanaiwa,

[1] Chiperu, vide infra, p. 240.

[1] C. A. Werner, "Among the Congo Cannibals, by John H. Weeks, London, 1912: a review," (Man, vol. 12, no. 10, 1912, p. 151).

I take this opportunity of returning to Miss Werner's review in which, speaking of twins, she says, "They are always among the boyands given the names *Mapali* and *Kyamo*." *Mapali* is Chinyanja either as a kind of wooden hammer-mend and the Chipeto meaning is "successive pulse." *Kyamo* is a Chipeto word which certainly means "the back." It is sometimes used of the second born twin but does not occur in Chinyanja. I have never heard of twins either among the Wayao or the boyanja spoken of by these women. A mother carries the first born on the right arm and the second born on the left, but, so far as I know, she does not give a duplicate greeting nor make a bustle of carrying equally with both hands.

6: Mitchell E-5 (1946-1947) 1949 FT7 Yao FT7

believe that she will die. The man's representatives are therefore able to establish the child's paternity from the birth-pang confessions of the woman.

The child is kept in the hut where it was born, for six or seven days, while the umbilical cord dries and falls off. During this time (*lusi*) the child is unnamed, and it is named only when it is taken out of the hut. Should it die during this period of seclusion it remains unnamed and is referred to by a special term (*ikuyu*, pl. *matyu*). I have therefore been able to enumerate live births by means of the distinction made between miscarriages and still-births (*kwisunga*) and children who lived long enough to be referred to as *matyu*. After the birth of the child the woman may not have intercourse for four or five months. To do so would be to endanger the life of the child with a disease called *ndeka*,[1] which is contracted by a sexually inactive person when he comes into contact with a sexually active person. The husband may have intercourse with a second wife, but must take care to medicate himself so that he does not endanger the life of his child. When the child is about 4 or 5 months of age the parents perform ritual intercourse and medicate the child against the mystical dangers of sexual activity; sexual relations are then resumed.

The Yao say that a second child should not be born while the first is still being suckled. Since lactation continues for about two years I am uncertain whether monogynists remain continent, as they say they do, or whether *coitus interruptus* is practised. It is quite usual for husbands to become labour migrants when their children are still very young. I have known women to write to their husbands who are away working and tell them to return because their children have 'grown', i.e. have been weaned. Labour recruiters had difficulty in recruiting men immediately after the soldiers had been demobilised at the end of the war, because the women objected, saying that they had remained childless long enough and the men must first wait until children were born. However, actual examination of birth-dates shows that children are sometimes born within a year of one another and sometimes there are quite big gaps. The two-year gap between children is probably an ideal which few attain.

5. The Estimation of Fertility

(a) *Sundberg's Age Divisions*

As a preliminary estimate of fertility, Sundberg's trichotomy of ages may be considered. The argument behind this division of the population into Youth, Middle Age, and Old Age is that those populations with a high proportion of youth have a greater tendency to increase. Table V shows this trichotomy for the Yao with the same material for some other populations shown for comparison. Where the gross reproduction-rate is known for the period shown in the table, this is included.

At any one time a certain proportion of the population is absent from the area, usually at some labour centre. Hence the proportions of the population are distributed abnormally. In all there appeared to be a total of sixty-three men, women, and children absent from the hamlets, who would otherwise have been living there. Hence in Table V these have been included in the totals in the 'Yao with absentees' proportions.

[1] A disease of this sort is believed in by many Central African tribes. Among the Nyanja-speaking peoples it is known as *chinyala*.

believes that she will die. The man's representatives are therefore able to establish the child's paternity from the birth-pang confessions of the woman.

The child is kept in the hut where it was born, for six or seven days, while the umbilical cord dries and falls off. During this time (*lusil*) the child is unnamed, and it is named only when it is taken out of the hut. Should it die during this period of seclusion it remains unnamed and is referred to by a special term (*lisyu*, pl. *matyu*). I have therefore been able to enumerate live births by means of the distinction made between miscarriages and still-births (*kwasage*) and children who lived long enough to be referred to as *matyu*. After the birth of the child the woman may not have intercourse for four or five months. To do so would be to endanger the life of the child with a disease called *ndoka*,[1] which is contracted by a sexually inactive person when he comes into contact with a sexually active person. The husband may have intercourse with a second wife, but must take care to medicate himself so that he does not endanger the life of his child. When the child is about 4 or 5 months of age the parents perform ritual intercourse and medicate the child against the mystical dangers of sexual activity; sexual relations are then resumed.

The Yao say that a second child should not be born while the first is still being suckled. Since lactation continues for about two years I am uncertain whether monogynists remain continent, as they say they do, or whether coitus interruptus is practised. It is quite usual for husbands to become labour migrants when their children are still very young. I have known women to write to their husbands who are away working and tell them to return because their children have 'grown', i.e. have been weaned. Labour recruiters had difficulty in recruiting men immediately after the soldiers had been demobilized at the end of the war, because the women objected, saying that they had remained childless long enough and the men must first wait until children were born. However, actual examination of birth-dates shows that children are sometimes born within a year of one another and sometimes there are quite big gaps. The two-year gap between children is probably an ideal which few attain.

3. The Estimation of Fertility

(a) *Sundberg's Age Division*

As a preliminary estimate of fertility, Sundberg's trichotomy of ages may be considered. The argument behind this division of the population into Youth, Middle Age, and Old Age is that those populations with a high proportion of youth have a greater tendency to increase. Table V shows this trichotomy for the Yao with the same material for some other populations shown for comparison. Where the gross reproduction-rate is known for the period shown in the table, this is included.

At any one time a certain proportion of the population is absent from the area, usually at some labour centre. Hence the proportions of the population are distributed abnormally. In all there appeared to be a total of sixty-three men, women, and children absent from the hamlets, who would otherwise have been living there. Hence in Table V these have been included in the totals in the 'Yao with absentees' proportions.

[1] A disease of this sort is believed in by many Central African tribes. Among the Nyanja-speaking peoples it is known as *ciwanda*.

6: Mitchell E-5 (1946-1947) 1949 FT7 Yao FT7

Table V shows that the age-distribution for the Yao sample is very similar to certain other populations commonly held to have high birth-rates. There appears to be some correlation between the proportion of youth in a population and the gross

TABLE V. *Sundbarg's Age Divisions*

Population	Year	Youth 0-15	Middle age 15-40	Old age over 40	G.R.R.
Yao*	1948	47·5	45·6	11·0	--
Yao with abscesses	1948	40·6	47·0	10·0	--
Hondurans†	1940	40·6	47·7	9·7	--
Nicaragua	1940	40·9	47·7	9·6	--
Guatemala	1940	41·6	46·9	9·5	--
India	1931	39·9	39·4	9·7	--
Japan	1935	36·9	47·9	15·3	0·98‡
Bulgaria	1934	34·9	49·9	15·2	0·70
Czechoslovakia	1930	26·3	54·3	19·3	0·91
New Zealand	1936	27·3	50·7	21·8	0·94
Denmark	1940	24·9	54·1	21·0	0·98
Sweden	1940	20·4	54·8	24·8	0·89

* There were 25 in the sample whose ages were not known. These were all adults and have been included proportionately in the two adult groups.

† All data for other populations taken from *The League of Nations Statistical Yearbook 1941/42*.

‡ Interpolated between 1930 (0·95) and 1937 (0·98).

reproduction-rate. Judging from the material presented in Table V a high gross reproduction-rate may be expected among the Yao where the proportion of youth is much higher than in the case of those whose gross reproduction-rates are quoted.

(3) *The Proportion of Children under 5 to Women 15-50*

Fertility may be judged more accurately than by this trichotomy by considering the proportion of children under 5 to the total number of women between the ages of 15 to 50, i.e. the fertility ratio.* In the whole sample there were 147 children under 5 and 152 women between the ages of 15 to 50. This is a ratio of 966 children per 1,000 women. However, women who are going away from the area for a long time, as, for example, wives of men who are going with their husbands to some labour centre, possibly in South Africa or Southern Rhodesia, usually leave their weaned children with their matrilineal relatives. This means that the ratio quoted (966 per 1,000) is, in reality, an over-estimate of the true ratio. In order to arrive at a nearer estimate of the ratio we must consider the children actually born to women in the sample. Table VI classifies all children both dead and surviving born to women between the ages 15 to 55. From this table we adduce that there were 151 women between the ages 15 to 50 (for whom details were available), and among them they had 141 surviving children under the age of 5. This is a fertility ratio of 938 per 1,000 women. Table VII shows the fertility ratio for 18 countries with their gross reproduction-rate for the same period as the fertility ratio.

* It is more usual to take the number of women between 15 and 44, though recently the age-group between 20 and 49 has been used. I have taken the age-limits 15 to 50 because of the early age of marriage, and because it appeared that the average age of cessation of child-bearing is about 50 (see Table VIII). For a discussion of the suitability of this measure of fertility where birth registration is not practised, see T. Lynn Smith, *Population Analysis*, McGraw Hill Book Co., New York (1948), p. 198.

4: Stannus D-5 (ca. 1909)1910 FT7 Yao FT7
Maravi FR4
Ngoni FR5
Bemba FR5

M 501 Necklaces, most commonly for children, are made of a number of little square pieces of hippo ivory strung together, ornamented with geometrical designs.

M 789 Medicine is often carried in a little packet suspended round the neck, as also charms of various kinds. The medicine may be some powdered charred roots or little twigs, leaves, etc., of some tree; these are sometimes now wrapped up in a piece of paper on which is written some extract from the Koran (among Mohammedan Yao); this is then sewn in a little piece of calico and adorned with beads and suspended round the neck with a string.

Y [789] Charms take various forms. Small pieces of wood or, to guard against attack by lion, teeth are worn. Armlets of the same kind are worn against sickness, and others are worn by Angoni, made of beads to which knives are attached. Bracelets of ivory, plaited grass and elephant tail hairs are also worn.

M 501 Metal and wirework bracelets are commonly worn by Angoni, also twisted wire finger rings and rings of lead and ivory. Heavy brass ankle rings and spiral brass leg and arm rings 6 inches and 8 inches wide are worn by some of the women (Atonga).

M 501 Bracelets cut from the nail of the elephant's foot are worn by Awemba women, and little finger rings cut from the ends of the ant-eater are worn as medicine against fever by headmen.

Bulbs made of wound copper wire are worn round the waists by Wankonde.

M 502 The use of pigments applied to the body is very limited. I have seen stripes of clown, white and red, on the faces of young women, boys and dancers, generally after some ceremony. The significance I do not know. Pigments are now obtained from Indian traders, and I do not know how old the custom is. There is no beautification of face, body, nails, and eyes by pigments. The only application made to the skin is castor and ground-nut oils to keep it soft—no scents are used.

CLOTHING.

M 291 Among tribes of Nyasaland the amount of clothing worn varies very considerably from nothing to European garments.

M 291 [856] Of the large majority, however, including Mabaja people, Yao and Angoni, one may speak generally.

The young children commonly run about naked, or have a strip of cloth covering the pudenda, supported by a string round the waist.

M 291 [856] Among the adult population the amount of clothing depends largely on the affluence of the individual, and those who cannot afford much have little clothing. A man wears a strip of calico supported in front and behind by a string round the waist, a woman a piece of calico 18 inches wide reaching from the middle of the thighs to the ankles.

Of the more prosperous, the men wear calico from a little below the knee to the waist, carefully wrapped round the body, and kept in position by some kind of belt; sometimes it is folded across the upper part of the chest or sometimes crossed over in front and two ends tied behind the neck.

3:Stanage D-5 (ca. 1912) 1922 FT7 Yao FT7

or a girl who has just returned from Chipute must not touch the child, as it is said, "Her body is hot and would give fever to the child." To guard against such a happening, some "clean" woman, after handing some beads to the mother, will ask to be allowed to take the infant. This indicates that should it sicken, the beads will pay the medicine-woman who comes to cure it. The mother and baby are simply washed in water and are not treated with medicine, unless menstruation has been voided before the child was delivered.[1] If the infant dies before it is presented to the outside world, it is disposed of in the same way as a stillborn child, i.e. buried in the ash-heap. About the tenth day, the baby is adorned with a girdle of beads and two little pieces of stick obtained from a medicine-woman to make the infant grow fat.

The length of time during which the father and mother refrain from cohabitation after the birth of a baby varies greatly according to circumstances. Four months is probably a minimum, while two years, during which the woman suckles the child, is the common interval. After the first cotton, the man and woman wash themselves and the baby is bathed in the same water to prevent any ill coming to it.

Suckling often continues much longer than two years. If the mother dies, the child may be suckled by the grandmother, an aunt, or some other woman, but the breasts must first be treated with medicine or the child would die

A child born breech first is called *mdwapa*, a word which is also used to denote a variety of domestic fowl which always has the appearance of having its feathers ruffled. A child who dies before the father and mother have resumed sexual relations is buried in a grave-yard apart from that of adults. The grave, dug with sticks, not hoes, is very shallow, and when it is filled in, a heap of stones is made above it. Only women attend the burial. A deep grave would cause the mother to go on losing children at an early age. The body of such a child is called *Ntemo*, "hyaena."

A woman dying unbelieved is placed in the grave in the usual way and then, before filling in the earth, one of the grave-diggers descends into the pit, cuts through the enveloping shroud, and incises the abdomen. One end of a long bamboo stick or reed is inserted in the incision and the other end is brought out to the surface of the grave. If this were not done, "many would die in childbirth."

Twins are not killed by the Yao but are well treated and always cared for equally. They are given similar clothing and food.[2] There is a story that the mother of Mwambwa,

[1] Chinyanja, vide infra, p. 266.

[2] Cf. A. Werner, "Among the Congo Cannibals, by John H. Weeks, London, 1913, a review," (Man, vol. 14, no. 10, 1914, p. 18).

I take this opportunity of referring to Miss Werner's notice in which, speaking of twins, she says, "They are always among the Anyanja given the names *Mapali* and *Nyamo*." *Mapali* is Chinyanja either in a kind of musical instrument and the Chiyao meaning is "measured pulse." *Nyamo* is a Chiyao word which certainly means "the body." It is sometimes used of the second born twin but does not occur in Chinyanja. I have never heard of twins either among the Wayao or the Anyanja spoken of by their names. A mother carries the first born on the right arm and the second born on the left, but, as far as I know, she does not give a duplicate greeting nor make a habit of suckling equally with both breasts.

3:Stannus D-5 (ca. 1912) 1922 ??? Yao ???

After the defeat of Kumtanje, Chibusi and his Angoni routed Kumtumanje, a brother of Malemya, who had also been making a nuisance of himself. Kumtumanje, who suffered from a large hydrocele, is supposed to have lost his balance on account of this impediment, and fallen into a stream where he had stopped to drink and to have been drowned. 175 167 648

The Angoni still burned for more warfare, and Malemya, fearing that with his work done, they might prove a nuisance to him, turned them on to the Amangwabe Yao around Phwetyre. Thither they set off on a raiding expedition and returned to their own country via Chiwindule. This raid took place in 1904.

During the next few years, Kawinga, who had always held a grudge against Malemya for having got ahead of him to the best country, occupied the chief with raiding and warfare. In 1909, Wandalama died, and was succeeded by Chimala, the son of his sister, Chingowo, and at the present time, he is the reigning Malemya.

It is of these Amachinga Yao under Malemya that the following notes are written. I have gone at some length into the history of these people in order to discount criticism by those who, familiar with other sections of the Wayao, may not agree with all my statements.

Life History. Generally speaking, the life of the Yao native in the old days was full of 181
more spiced with the excitement of intertribal warfare. He cultivated his crops, kept a few goats and chickens, and relieved the monotony by hunting. Even domestic slavery was not a great hardship, nor did the Yao probably suffer from coast slave-raiding to the same extent as many other tribes. As children, they are want to spend their days free from care, seldom reprimanded, and rarely or never physically chastised. During youth, the more 897
easy lot is theirs, with the addition from time to time of a few small tasks; minor household duties for the girls, such as drawing water, sweeping the hut, and "minding" the baby, while the boys low or bleat and carry for their fellows in the village or in the bush. Left to their own devices, they play games,[1] dig out rats' nests, or shoot birds with bows and arrows.

Now, as formerly, when they are about five years old, the girls usually go to live with their grandmother who may then have a number of children around her; or several girls of a somewhat more advanced age may sleep together in a hut dormitory. Boys of this age all live in a big hut called *ngombe ja chachenda*, "the boys' dormitory." This is their quarters until one by one they leave to get married. The girl, similarly, remains in the girls' dormitory or with her grandmother until she is taken in marriage.

Puberty. The first interruption of this placid life of youth is the coast of puberty or the 681
first initiation ceremonies.[2] Formerly, these ceremonies took place after puberty but of late years, as is pointed out elsewhere, they are performed much earlier.

Child betrothal. Betrothal in childhood or before birth is not uncommon. A woman 584
learning that some friend of hers is pregnant will arrange that if a girl is born, her son will marry the friend's daughter, or a man taking a fancy to a little girl will adopt her as his

[1] This latter, p. 187. [2] This latter, p. 188.

3: Sudanese D-5 (no. 1912) 1932 F77 Tao F77

called bowy; *mokowe* or *mawkowe*, the words given by Dr. Sandeman, are not known to the Tao in this district. There is a simple game played among the Anyanja children and therefore called *ukowe* (*ukilidak* or for children), but the common game played in more difficult as shown by Dr. Sandeman. *Mikowbow* is being partly displaced by a Swahili variety called *bao*, or *ohwa* by the Tao, *ohwa* (Pl. IV, fig. 4). I may here also point out that the words *mowe* and *mala*, which Dr. Sandeman uses for the Manyanja and Angoni varieties of the game, are often replaced by *ochwa* and *bao*.

Tao children play at keeping house in little grass structures, made near the village or in the fields, while their parents work. Children who can only toddle may be seen practising dancing the steps of their elders. The boys play with miniature bows and arrows made of a kind of grass, *mwa*, and make a toy dart-tube, *uti* (Pl. XXII, fig. 3). Little dug-out canoes eighteen inches long are made for them to sail in pools.

Among the lads in a village, games of fighting are much indulged in; two sides are opposed and their weapons are of various kinds. Sometimes each is armed with a length of bamboo, into the hollow end of which seed and pebbles are put, representing powder and shot. This end of the bamboo is then rapidly swung in the direction of the "enemy" and will discharge the seed and pebbles into the face of the opponent. This is called *uti ja mwanje* ("gun for seed"). The boys are sometimes armed with cane *ochwa* for throwing at each other.

Chiwere is another form of fighting. Armed with a collection of small stones, each flicks his stone at the enemy with very good aim, using the fore-finger of the right hand to propel the stone, the index of the left hand acting as trigger and the left thumb as the spring. The name comes from *wu* the sound of the whizzing stone as it goes through the air.

In a pool opposing sides fight with rudimentary syringes made of bamboo, driving streams of water into each other's faces. This is called *ipuwu*, from the sound of the stream of water, or *uti ja mwai* ("gun for water"). In the water they also play *chiwinjichinga*, (*ku-twinjichinga*, to press down). Boys are ranged on two sides; each tries to "collar" one of the opposing side and put him down into the water, holding him down between his legs. An old water trick is for a boy to go down to the bottom and there squat with his face turned upwards, the mouth stretched wide open by the fingers; viewed from the surface the face looked flat and very grotesque. There is also diving for coins, *ukiwelile* (*ku-wielile*, to dive for).

A kind of skipping, called *ukiwuwu*, from *wu!* *wu!* the sound of the rope as it goes round in the air, is a great favorite. A rope with a heavy rope about fifteen feet long, with a handle of grass at the free end enclosing a lump of heavy wood or stone, swings it round and round his head. The faster it goes, the higher it will fly out, while the boys in turn run in and jump over it. Sometimes a boy is caught by the rope and gets a nasty blow, occasionally resulting in a broken limb.

3:Stanzas D-5 (ca. 1912) 1922 FT7 Yao FT7

Taking advantage of the natural inquisitiveness of youth, a favorite trick for making money is for a man to appear in a village making pretence of having a peep-show, something contained in a covered basket or in a cloth. On payment of some small amount, the youth is allowed to peep in, maybe only to see a dead mouse; finding he had been "done," he of course bursts out laughing and, anxious that all his companions should also be "done," he does not "give it away" and so the peep-show man makes quite a good living.

857 673 543

Yao girls play with dolls of two kinds, *lilele*, made from little gourd-like fruits called *lilenge*, and others called *mwanaka*, "a child," made from maize cobs. These dolls they carry about on their backs as mothers do their children. *Lilele* is made of three of these little spherical fruits glued together with beeswax; on the one which represents the head, seed, red and blue, of the *ulengwipe* tree are mounted in rows to represent hair, and often beads, as in the *nakaka* method of hair-dressing. One sees similar dolls made for the children of other tribes. Thus, among Mandowe's Angoni, a doll called *mwana*, "a child," is made in a dumb-bell form of two small spherical gourds joined by a bundle of sticks bound together with string and wax; on the head-piece string is mounted to represent hair. Their children also play with little clay images of cattle and men, a custom they have preserved from their old Zulu ancestors but foreign to the Yao. The Ankonde children have carved wooden dolls not seen in any other tribe. *M'ananda* is made from a maize-cob by shredding the papery coverings of the cob; on these shreds are threaded white and red varieties of maize to represent heads, or the shreds are plaited into a number of tags to represent hair.

857 524

Latterly, the children have taken to making hoops and show considerable skill in driving them with a piece of bent reed (Pl. XXII, fig. 8), while the older boys make two-wheeled representations of bicycles with a very clever imitation of all the parts of the machine.

[77]

The whipping-top, *wanyalye* or *wanyanye* (*nyali*, Chin.), is found among the boys' toys. It is made of a conical piece of wood with a flat top and no metal peg. It is started spinning by pulling off the string wound round the top. The whip consists of a piece of string fastened to the end of a stick. Sometimes tops of large size are used, and two boys whip them from opposite sides (Pl. XXII, fig. 6).

A game called *ukipate* is played by youths; it takes its name from *ku-pata*, to strike, and refers to the action of striking with a finger the hand in which a bean is guessed to be. A spiral is drawn with the finger in the sand with a central point to represent a village, and a tail-piece prolonged on one side to a second point which represents a show-market on the coast. Along the line, a number of other points are demarcated to represent sleeping places en route. At the village, two white beans are put to represent the two players and with each is a smaller brown bean to represent his slave. At the slave-market are placed a variety of beans to represent trade-goods, cotton, beads, etc. Each of the two players in turn shakes a single bean in his closed hands and then shows the hands, separating them at the

3:Stanner D-5 (ca. 1912) 1922 FT7 Tao FT7

857 527 same time so that the bean is contained in one hand; the other player has to guess in which the bean lies and this he does by striking with the finger the hand in which he imagines the bean to be. If the striker guesses correctly, he moves his stick and his skew to the first sowing-place. It is then his turn to hide the bean. So it goes on till one or the other arrives at the skew-market. Here he factors his skew for trade-goods and returns in the same way; whoever gets home first wins, and the loser is said "to have died on the road," a not uncommon event in the old days. It is interesting to note that cheating is sometimes attempted [788] by palming beans between the fingers, so that in the hand guessed, the bean is palmed between the fingers, and, in the other hand, a bean is released from between the fingers into the palm.

526 *Njenje* (native, Chin.): a kind of ninepins, which takes its name from the object which is thrown to knock down the ninepins. The game is played by youths and men, equal numbers sitting in two parallel rows fronting each other on the ground, the two rows composed of a dozen or more persons, a few yards apart. Each person has set up in front of him on the ground a maize cob from which the grain has been stripped, or each may have a number of them, perhaps six. In the former case, the cobs are perhaps two feet apart, in the latter only a few inches. Each player is provided with several njenje, from six to twenty-four in number. The njenje is a piece from the side of a gourd, slightly concave-convex and circular in plan, with the edge often cut into serrations. A piece of cord is fixed through a hole in the centre, projecting an inch or an inch and a half from the convex surface, thus forming a kind of tentorium, two or three inches in diameter (Pl. XXXI, fig. 9). It is held between the thumb and second finger by the foot-piece; by a sharp movement of the fingers, it can be spun out of the hand and, at the same time, jerked forward by another sharp movement at the wrist. At a given signal, the players on both sides start launching forth their little tops which spin away towards the maize cobs of the opposing side, the object being to knock them down. When there are many on a side, each with a number of cobs, many fall with the first onslaught, but as fewer and fewer remain, it becomes more difficult, and players try to show their skill by aiming at the cobs farthest away from them, along the opposite line. The game goes on till only one cob is left standing; then, if a player of the opposite side knocks it down, he puts one of his own up again, and the side which had the one remaining puts one up, and so the game may go on. When they are tired of playing, they say, "*Kawale hwaqa*," "We must finish the game," literally "Come on, we must swell."[1] A knife is then stuck in the ground on either side, the blade pointing to the opposite side, and each man, when he has hit the knife of the opposing side with his njenje, is considered to have shown his skill, and goes off. The last man remaining is laughed at as being a fool at the game. If a beginner is playing, he makes sure of having his try first, so that he will not be left in to the last. The game has a great fascination for the natives and it is said of Malenya, the uncle of the present chief (1922), that he was

[1] Vide supra, p. 297.

526

so unfamiliarize a player that if anyone wanted to make a joke at his expense, he would swap his fingers, imitating the action of throwing the njuga.

Chipulupulu: a Mang'anja game now played by the Yao which takes its name from Sapulupulu, to scratch as a fowl does looking for food. The words used in the game are all Chinyanja. A number of beans, perhaps twenty, are put down in a row at intervals on the ground. One player manipulates the beans, while the other has his back turned so that he cannot see. The first player calls, "*Chipulupulu chipulupulu!*" the second answers, "*Mawu Mwapa* (child of a guinea-fowl)." The first then says "*Kwapa apa!* (What about here?)", pointing to the first bean; the second player answers "*Pakuti!* (Pick it up!)." At the second round, the first player having picked up the first bean, points to the place where it was and repeats his cry, but at the words, "*Kwapa apa,*" the second player has to say, "*Palibe!* (There is none!)." Then he comes to the second bean and says, "*Kwapa apa*" and the second player, knowing that he has come to the second bean, answers, "*Pakuti!*" When three, four, or five beans have been picked up, the first player asks three, four, or five times, "*Kwapa apa?*" and the second player to each question should answer, "*Palibe!*" and then, when the first player points to a bean and not to a blank, the second player should know that he has come to a bean and answer, "*Pakuti!*" instead of "*Palibe!*" When played quickly, it is not altogether easy to answer correctly, as the end of the line of beans is approached.

Chipuzo cha swapulo (to strike with the hand) is played with four pebbles or beans. Starting with two in each hand, the fists are closed and then making similar movements of throwing from each hand, two are thrown from one hand, or one from each as the case may be, as a sleight-of-hand. One of the two thrown on the ground is then taken up in each hand, and the guesser has to say in which the three are. This he follows by striking the hand with one of his fingers. This game has many variations.

Chisimisimi: a game of jumping from a big cook over a fire. Before jumping, the boys sing, "*Chisimisimi chisimisimi ada!*" 857 524 526

Chindumudumu (to-tem, to pinch): each of a number of boys loosely pinches hold of the skin of the back of the hand of his neighbor, one hand above the other. They then sing:

"*Chindumudumu chindumudumu, mikhala!*"
"*Pinch Pinch, not number!*"

At the word *mikhala*, everyone should break away while digging his nails into the hand beneath his. Some one of them is sure to have had his attention distracted and forget to pinch hard, while he himself receives a pinch hard enough to make him jump.

Running cross, each boy learns a note: — "*ma . . . ra,*" each one in a different key. Anyone changing his note is disqualified.

Ipuwe: a number of stems of a reedlike grass with long joints, or small rubber sticks are bound together by their upper ends. The free ends are bowed in a fire, then hanged down 524 857

3:Swanson D-5 [illegible] 1912] 1922 FT7 Too FT7

[S24 S5] on a stone. They explode with a noise like the sound of a gun. The boys send them off, one after the other, imitating fighting, or sometimes bang them down on some one's head. They go off, making the sound *tpwee!*

Small boys or girls among themselves play a clapping game called *ppyplin*. One sings:

[S34] "*Ppyplin ppyplin, ppyplin ppyplin, ppyplin ppyplin, fumpere nomo!*/*a po ekinge po' mmi!*
"Bang stamp stamp stamp stamp stamp the one who has passed movement the at the door at his mother's.

Ekpende, hanu, hanili!" etc.,
let him clap once, twice!" etc.

They all clap together at the word "once," "twice," and so on. No one knows how many times they are going to be called on to clap, and action one is sure to clap when no word is given and so is caught and made fun of, so the one who has misbehaved.

[S34 A10] *Ldrumie* (*lu-dumie*, to clap): simple clapping when pleased with anything is commonly indulged in, mostly by women and girls.

Little girls play at making little pots. This is called *pombiniyin*, (*lu-pombe ekinge*, to model a pot). They also play at pounding grain, called *ekindubi*, "learning to keep time," the word itself being an imitation of the sounds. Five or six pound in one mortar; in between strokes, they throw the wooden pestles up in the air, catching them again in time.

[S37] "*Ankyindube hatuli pa' ego-mmoni po ekolopa!*"
"The one who opens little mortar that that one which is bewitching!"

This is the song of a game played by little girls. One sits in the middle with a stopper on her head, to represent a grain mortar, while the others form a ring round her holding hands. As they sing, the circle at one point swings in, and one of the girls passes in front of the one sitting down, her back to her all the time, the hands passing over her head. This they do one after the other very quickly and anyone who touches the girl in the middle, "who knocks down the mortar," takes the place of the girl in the middle.

[S38] "*Ammomoyo Ammomoyo ejokoni mbo!*"
"Our wives, our wives, setting off (interjection)!"

is the song of a game played by a lot of boys together or a lot of girls together; they do not join with one another. Two opposing groups are formed of equal numbers. Each is led by one of the older children and behind him is the rest of the group, each holding on to the cloth of the one in front. The followers of each leader represent his wives. The two parties then sing and maneuver for the leader to get at the tail of the other group and "collar" a wife or two from his opponent. It becomes very exciting. As they go faster and faster, some of the tail may get swung off and captured by the other side before they can again join their own.

Sc Stanner D-5 (ca. 1912) 1932 FT7 Yao FT7

Trapping and catching of animals is pursued with great glee by small boys. They make many of the traps, particularly the two kinds of *lilim*, *chiputo*, *chijumbo*, *chinum*, *limwa*, and *ngwa*. *Lilim* is set in rat runs and the rats are driven into them (Pl. XX, fig. 6). Digging-out rats is a favorite amusement for the boys and brings meat to the pot. May is the best month for this sport. They are adepts at recognizing burrows which have rats inside. Digging is commenced at one entry to the rat-warren, the escape holes being closed with tufts of grass. As they get nearer the rat chambers, they smell the earth and so know when they are quite close to the rats. A bunch of grass is then put in this hole, lighted, and kept alight by blowing on it. One of the rats will try to bolt and is knocked on the head. He head is then squashed to kill him effectually, and the skin of the tail of the first rat is always pulled off for luck, "so that they may catch many." They will try to guess how many there are going to be, "two and ten and five and two!" Each rat when caught is buried under some earth, so that the hawks will not swoop down and carry it off. When they have finished one warren, one of the party is appointed to carry all the rats. He ties a string round his waist, and the rats are slipped underneath it and so secured. They then go on to another; the carrier will bear the whole catch for the day and may, before they have finished, have several strings of rats round his body, one above the other.

Digging-out crabs, *ku-kupa napolo*, is another favorite amusement for children; (*ku-kupa* is to dig up anything like mud which makes a squelching sound). Crabs are never eaten with flour, but always with *nsunsi*, the grain kunka, "crabs and brown-bread!"

Youths and girls fish with a rod, line, wire hook, and worm, *ku-kupaya ansebu*, to pull up fish. They also catch fish, using the fish poison, *ntuta*. Birds are killed with a bow and a blunt-pointed wooden arrow.

A small boy, seeing a girl or a younger boy with a cob of maize and wanting it himself, will say, "Let me make a path to the coast!" He will then remove, say a couple of rows of maize grains for himself, much to the interest of the owner; or "Let me make *dimbo*" (*dimbo* is a shaved head on the scalp), or "Let me make the crab's eyes!" when two solitary grains are left, surrounded by a simple ring of other grains, as the girl's portion.

Children are taught a little saying about their fingers which reminds one of the "This little pig went to market" of one's infancy. Starting with the little finger, they say:

> "*Alabu kangalabu kangalabu!*"
> "This little one (is) the one which cannot draw water!"

Pointing to the ring finger,

> "*Kandulapuse ujunguwalu!*"
> "This little one's brother (is) the one that picks the nuts!"

To the middle finger,

> "*Ujunguwalu uwulu uwulu!*"
> "(The brother of) the one that picks the nuts (is) the one who finishes nuts!"

3:Stanner D-5 (ca. 1912) 1922 FT7 Yao FT7

857 To the index:

524 "*Lukungulu lwa ng'ombe lwa lumodilo mwilumbu!*"

539 "(This one is) the leg of an ox which walks on the plain!"

To the thumb:

"Chimwene"

"The 5th"

857 *Cat's Cradles* are known as *shingwe*, "the spider's web" (Pl. XXIII). The position
524 of the string on the hands is as in Position I of Miss Haddon's book and this is followed by Opening A, given by the same author.[1] (Pl. XXIII, figs. 1, 2.) Three methods of arriving at the same figure, which is called "the net," are shown here (Pl. XXIII). Variety C is followed by the making of a knot, figured in C 13, known as "the child." There are probably a number of other forms made by natives, but these, which I saw one of my women patients make, will serve as an example.

534 **Musical Instruments.** The number of instruments proper to the Yao appears to be small, indeed probably only two in number, the *mangulungulu* and the *shitepe*, with perhaps the three holed flute, *shitolo*.

The former is constructed on the principle of a xylophone; it consists of two trunks of banana trees laid on the ground and held in position by stakes. They are not quite parallel but approach each other somewhat at one end, being from one to two feet apart; on these rest cross-wise a number of pieces of wood of varying thickness and length, kept in position by pegs driven into the banana trunks on each side of each billet. These are struck with sticks by a single player, or by two persons sitting on opposite sides of the instrument. Another variety is found in which the pieces of wood, which may have holes bored in them to effect differences in sound, are arranged over a hole scooped in the ground (Pl. V, fig. 1).

The *shitepe* consists of a piece of plank hollowed out to form a resonator on which are fixed a number of keys of bamboo or metal of different lengths. These are arranged across a bridge, and the free ends are set in vibration by twanging with the fingers.

[177] The instrument now most commonly seen is the *ezee* which was introduced, I think, from the coast about 1890 to 1900. It is a type of guitar.

An instrument played by women — and this again is of recent introduction among the Yao — is the *mkungulu*, which consists simply of a stick of wood about a yard long to which is affixed a single string. One end is held between the teeth, the other in the hand; it is twanged by being struck with the thumb and finger of the other hand close to the mouth, which is opened to different degrees, and gives a variety of notes resembling those of a jews' harp.

The *ching'wengong'wengo* and drums are referred to under *Dancing*.

[1] Kathleen Haddon, Cat's cradles from many lands, New York, 1931.

3:Sierra D-5 (ca. 1912) 1922 FT7 Tao FT7

535 steps are accompanied by movements of the shoulders which form the feature of the dance. Performers may go into the middle and do *ku-pumila* (see *mbende*).

Mbende resembles *njende*; it is an old dance not seen now.

Chihende is a dance for youths, the characteristic feature being that, at intervals, they squat down on their heels and spin round very fast, with frog-like movements (Pl. III, fig. 1).

Mbende is a favorite dance for men and women; drums, *likuti*, *ndingiya*, *mukwa*, *chimisinga*, and several *lingoles*. The dancers commence by going round in a circle, and then, facing the drums, they all continue their steps without moving from their places, while a few go out into the circle and dance in the open space about the drums. Two men go out from one side and are met by two women from the other side. Men love to carry their knives in their hands on these occasions, preferably the large knife with an ivory handle called *mwaja*; a man would go miles to borrow such a knife from a friend, for the dance. The women often carry rattles in their hands. After dancing in the middle for a time, they will severally withdraw to the circle, to be followed by others. A man dancing out into the middle, may go up to any woman in the circle or among the onlookers, and by touching her on the shoulder with his knife, invite her to come out and dance. In the middle of the ring, he may embrace her, after which each retires to his place. To make this embrace is called *ku-pumila*; the man folds the woman to his breast. It is very gently done with a certain air of gallantry, and there was formerly no objectionable element in it. A man does not extend this embrace to his wife or to any near relatives. *Ku-pumila* occurs in other dances: *chihende*, *chikwa*, *mlonjoso*, *njende*, *mbumbu*, *mumwabula*, *chibilo*, *lishipi*, and *lipepe*, and in *ndwa*.

Chikwa: the drums used are *chimisinga* and *mukwa*. It is danced by young men and women; as in other dances, a ring is formed, the men on one side, the women on the other. The song is usually started by two men on one side and answered by two women on the opposite side. When the song is well under way, the drums are signalled and all start dancing in a circle. Movement in all dances is counter-clockwise. After circling round, the dancers come to a stand-still, while men and women go out into the middle and dance a kind of quick heel-and-toe step, followed by *ku-pumila*.

535 In the intervals of dancing, the girls and boys often play at *ndwa*. They may stand or
857 sit in a ring. One of the boys standing in the middle sings, "*Ndwa ndwa, ndwa ndwa, ndwa!*" with an accompaniment of clapping by the ring of youths, but no drums. He then goes up to any girl sitting in the ring and asks her whom she wants; she names some one who is then called out, and the girl and boy dance up and down together, embrace (*ku-pumila*), and return to their places. Another girl is then asked. Sometimes the girls will take up the song, and ask the boys to choose. It is like a kind of "kiss in the ring."

There is another kind of dance for boys and girls. They are arranged in rows opposite one another, some paces apart. The boys grasp a long pole and bending forward, dance up

Sitamma D-5 (on. 1912) 1922 ??? Yao ???

to the row of girls, singing, "*Anambwela ndawaka!*" ndwala, "*Mapendwa!*" (be-pende, to give). Leaving the pole at the girls' feet, they retreat, after which the girls take it up and advance to the boys in the same way.

Chilwe is danced rather like *ndewanda*. A group of men dancers go round in a circle, and within this circle may be a line of women dancing to the same time but with rather different steps than the men. This I have seen danced by a trained band of dancers, but *ndewanda* join in. A man may lead a woman into the middle and embrace her. There is a tendency among these trained dancers to forsake the old time steady embrace for something which is not so unobjectionable.

Lidzipi is a new dance, but one that is well-liked. The drums are as in *ndewanda*. Men, women, and young people dance in a circle followed by entry into the middle, and be-pende.

Mbende is danced by men on one side and women on the other side of a circle, to drums *mdomo*, *ndinda* and *mangoko*. Any of them may dance out into the middle after going round in a circle.

Lipenga is an old dance for the older men and women. Like *ndewanda*, the steps are slower and are characterized by side-to-side movements.

Mtokangu: drums, *likuli*, *chingwanga*, and a *mdomo* drum called *mbidzi*, because it is so played as to give the sound "*mbidzi!*" It is danced by men in a crowd. While the feet do little, shuffling steps, the buttocks are jerked out backwards and forwards.

Chandamali: a dance of recent introduction resembles *ulali*.[1]

There are three dances which are danced by special dancers.

Mwejuwa: the same as the *ndewanda* of the *Anyanja*,[2] generally danced by four men who wear a kind of kilt made of strips of palm-leaf, and rattles, *mawawa*, on their legs. They may also wear the *lisungu*, a headdress made of the tail-feathers, *usipa*, of the *chinyanga* bird: it is like a broad hat-brim without a crown, the feathers projecting radially. The *ndawala*, a piece of a shell which comes from the Zanzibar coast is also often worn (Pl. III, fig. 2). The drums which give the time are *chimisinga*, played very rapidly indeed. The steps are incredibly fast, with greater excursions than in the other dances, and usually end up with a jump into the air and a pose with grimacing. A circle is formed round them by the young people who, in the intervals, walk round singing and clapping. The dancers may call out any girl for the embrace.

Mwanja: danced by two or three pairs of men who wear the palm-leaf kilt, *mawawa*, and a broad, bark-cloth belt called *chamba*. When the drums start, these dancers walk round the circle of onlookers, and get the song going, and the clapping to time; then with a signal to the drummers, they start dancing alternately an extremely rapid dance with rattles in the hands, *mawaja*, and a kind of dance-do-wrong, *chamba*. The drums employed are *mdomo*, *mipatipa*, and *chimisinga*. The rapid dancing is too exhausting to last more than a few seconds. This is always danced at *Lupanda*.

[1] Cf. Sharpe, "Notes on some tribes of British Central Africa," op. cit., p. 204. [2] Ibid.

535
534
341
301

323
415

657
535

[End Plate 3]

G. Stannus D-5 (ca. 1909) 1910 FT7 Yao FT7
Marroi FR4

wrestle thus: each man passes his right arm round his opponent's waist and grips his opponent's left wrist. When one has thrown the other, the victor spits on his hand, dips it in the dust and then smears his victim on the forehead.

The boys practise long jumping. Small boys make miniature bows and arrows, spears, etc., to play with; in their ways and frolics small children resemble European children exactly. Little girls play at dolls—they cut cucumbers into shape and dress them in calico cloth, carrying them on their backs and making pretence to suckle them.

The first words spoken by an infant are *ma* (*amai*=mother) and *ta* (*atata*=father); at two years *mama* and *tata* are words used; a word soon learnt is *ndawa* "No! I don't want it."

The only setting I ever heard of occurred when my own Marbila men once acted a village scene, in which a woman (a man dressed up) while pounding corn was seized and raped by another man. At the right moment her husband and others rushed in and collared the man, who was condemned to have his head cut off; the execution followed.

Dances.

The following is a list of dances; opposite each is the name of the tribe who dance it:—

1. *Chindindo*, Yao.
2. *Lilomo*, Yao.
3. *Ulula*, Yao.
4. *Matowei*, Mahanja.
5. *Kwapi*, Mahanja.
6. *Pindamitowe*, Mahanja.
7. *Mwawo*, Mahanja.
8. *Kwangwe*, Mahanja.
9. *Mlando*, Mahanja.
10. *Chilwi*.
11. *Pingwa*, Mahanja.
12. *Nindo*, Mahanja.
13. *Lilimo*, Yao.
14. *Njenda*, Yao.
15. *Sokwa*, Yao.
16. *Nawaja*, Yao.
17. *Nkonde*, Yao.
18. *Chikwada*, Yao.
19. *Mbwaw*, Yao.
20. *Mwapwji*.
21. *Sowji*.
22. *Chimwiniwini*.
23. *Mowow*, Mahanja and Yao.
24. *Mwaf'ombola*, Yao.

1. *Chindindo.*—Danced at the *mafwio* (mourning ceremony) generally inside the house unless a very large number of people are present.

All sit round and clap while one after the other men and women get up and dance in a rocking motion from one foot to the other, a small drum held against the chest; in former times a large one lying on the ground used also to be used—now two or three, standing on legs, are employed. When danced in the dead man's house, the body lies at one end of the room with the *Adambula* sitting by it. On one side are the widows, and on the other the dancers, the dance being sometimes started immediately after death, sometimes the following morning and continued for three days.

This dance is also performed at almost any beer drinking.

2: Mitchell E-5 (1946-1949) 1956 FT7 Yao FT7

contents. Here once again the women, though they may have no boys in the initiation ceremony, are called 'the mothers'. The ritual co-operation of the mothers in the initiation ceremonies is paralleled by that of mothers and sons in political affairs: here sons are in charge of the villages, while their mothers and sisters form the nucleus of the localized kinship group, which in turn is the core of the village.

The ritual importance of the mother is nowhere more clearly seen than in the curse. The Yao believe that a mother may curse her child if he or she is disobedient or otherwise beyond control. Not many mothers do curse their children; the threat to curse seems to be more often used. Informants have told me of some mothers who have cursed their children, and the procedure and the wording of the curse have always been very similar. It is usually not applied to young children who could be punished by other means, but to adults and particularly adolescents. Usually the mother lifts her breast and points the nipple upwards saying, 'If you have never sucked from this breast nothing dreadful will happen to you.' The consequences of this are greatly feared. Where I have been told of curses, each time the child has either died suddenly shortly after the curse, or at least it has gone mad. The curse is vaguely supposed to operate through the ancestor spirits, but I could get no clear statement on how this happens.[1] Whatever the cause, however, the symbolic action of lifting the breast and the dire effects which are supposed to follow from this, indicate the importance of the mother in the lineage.

The Yao attach this sentiment, in general, not only to the mother, but also to all senior matrilineal female relatives. In general speech all female members of the matrilineage in ascending generations are 'mothers', and all members in the descending generations are 'children'. This fundamental relation of mother and child extends throughout the lineage. The Yao term *acinangolo*, used for the senior female members of the matrilineage, embodies this idea of 'the mothers'. More specifically, as far as men are concerned, the matrilineage is classified into

[1] Further evidence that the ancestor spirits are involved in the curse may be that madness is called *masoko*—spirits—and that it may be said of a madman that the spirits are beating him (*gakumpata masoko*). A curse may be revoked by blowing water out of the mouth, an act which is also vaguely connected with the ancestor spirits.

CIRCUMCISION AND INITIATION CEREMONIES.

Y 554 [1909] Circumcision was not practised among *Anyanja*. Among *Amangandu*, *Mankanja* and *Yao*, the practice was known as *Isapango* or *Isapondo*.

Ku-ombola Isapondo:—the prepuce was drawn forward and a stick made on the right side of the median line near the foreskin. An application mixed with oil was applied. At the present time the Mohammedan practice is common. *Ku-ombola Jando*:—the prepuce is drawn forward through a split piece of bamboo and cut off with a sharp knife.

Circumcision is performed on boys usually at the age of nine to twelve years by a medicine man called *Kpolio*, an honourable calling, in a hut at the Isapango camp. Both patient and operator stand, unless the former is young, when he sits. The ceremony is witnessed only by the boy's friend. Among Mohammedans clitoridectomy used to be performed by a woman operator (*nakompe*), but, it is said, was discontinued, on account of the heavy mortality, about seven years ago. At the time of the operation a woman was given medicine to make her vomit all unlawful things she might have eaten.

Y 394 981 Initiation ceremonies (including circumcision) take place at irregular intervals. The chief or headman settles the date at which the Isapango shall be held, generally once a year in July, when there is no work and little else to do. Boys who are considered ready will then take part. The elder brother or a friend of a boy settles whether he is ready for circumcision. The mother then takes a present to the chief. The boys, their friends and the medicine man then depart for the bush, sometimes a couple of miles away from the village. The number may vary from three or four to as many as thirty or forty. In the bush grass huts (*ne nanai*) are erected for their shelter. Food is brought by the mothers and deposited a little way from the camp, and the friends who have accompanied the boys fetch and carry and act as sentinels to prevent approach of any "outsiders." Six months used to be spent in the bush, now four to eight weeks only, and all the circumcision wounds must be healed by the time of the candidates' return. If a boy die, the mother is not informed, she is allowed to bring food each day; at the end when the return is made enquiring she is told by one of the men.

The exit from the village is accompanied by the friends dancing *Tawji* or *Mawu*, the boys in old calico (formerly always in bark cloth) walk and sit down on arrival at the place appointed. Y ● [967] The circumcision is performed the following day; during the time which follows instruction is given them on their duties in after life as men, in good behaviour in their married life, *re* coitus, eating of food, superstitions regarding salt, etc. When this is all over a message is sent to the village, and the youths, walking quietly dressed in new cloths, are met half-way by the women and girls, who dance and sing; after the return to the village there is Y 551 981 [836] drinking and dancing, the newly initiated refraining for one day. At the present time the youth probably has some "friend" of the opposite sex with whom he sleeps; until he has had coitus he may not eat food into which salt has been put. His

4:Stanner D-5 (ca. 1909) 1910 FT7 Yao FT7
Marau: F24

wrestle thus: each man passes his right arm round his opponent's waist and grips his opponent's left wrist. When one has thrown the other, the victor spits on his hand, dips it in the dust and then smears his victim on the forehead. FT7 Y 524

The boys practise long jumping. Small boys make miniature bows and arrows, spears, etc., to play with; in their ways and frolics small children resemble European children exactly. Little girls play at dolls—they cut cucumbers into shape and dress them in calico cloth, carrying them on their backs and making gestures to suckle them. FT7 Y 557 524

The first words spoken by an infant are *ma* (*amai*=mother) and *ta* (*atata*=father); at two years *mama* and *tata* are words used; a word now learnt is *tatata* "No! I don't want to." FT7 Y 525 525

The only setting I ever heard of concerned when my own Machila man *Jamu* acted a village scene, in which a woman (a man dressed up) while pounding corn was seized and raped by another man. At the right moment her husband and others rushed in and collared the man, who was condemned to have his head cut off; the execution followed. FT7 Y 524

Dances.

The following is a list of dances; opposite each is the name of the tribe who dance it:— FT7 Y 535

1. *Chindindo*, Yao.	13. *Lilian*, Yao.
2. *Likwata*, Yao.	14. *Njoda*, Yao.
3. *Ulale*, Yao.	15. *Sakuse*, Yao.
4. *Mitowei*, Matenje.	16. *Nawaje*, Yao.
5. *Kwaje*, Matenje.	17. *Nkondo*, Yao.
6. *Tinkumbiwe*, Matenje.	18. *Chikondo*, Yao.
7. *Nkwawe*, Matenje.	19. *Mkwaw*, Yao.
8. *Kwamapwe*, Matenje.	20. *Mangwaji*.
9. *Mtondo*, Matenje.	21. *Sonji*.
10. *Chilwi*.	22. *Chiwwiniwini*.
11. *Vinapwe*, Matenje.	23. *Mawow*, Matenje and Yao.
12. *Ntale*, Matenje.	24. *Mong'ombolo*, Yao.

1. *Chindindo.*—Danced at the *malele* (mourning ceremony) generally inside the house unless a very large number of people are present. Y 555

All sit round and clap while one after the other men and women get up and dance in a rocking motion from one foot to the other, a small drum held against the chest; in former times a large one lying on the ground used also to be used—now two or three, standing on legs, are employed. When danced in the dead man's house, the body lies at one end of the room with the *Adondola* sitting by it. On one side are the wailers, and on the other the dancers, the dance being sometimes started immediately after death, sometimes the following morning and continued for three days.

This dance is also performed at almost any beer drinking.

1: Tew E-4 (no date) 1950 FT7 Yao FT7

Birth

Birth takes place in the bush, some distance from the hamlet, in the presence of female relatives of the woman and of her husband. If the child is stillborn, or miscarried, it is buried in the bush. The husband and wife must abstain from sexual intercourse for some months, until a special ritual intercourse is performed. A man who breaks this taboo is liable to contract a fatal disease, *bwanaga*. Difficult births are attributed to: (a) a curse spoken by a matrilineal relative—this is made effective by the intervention of the ancestors, and to remove it it is necessary to perform a rite making clear that no malice is borne; (b) the adultery of the woman or her husband, in which case confession will save the woman from dying; and (c) sorcery.

If a child is born alive it is brought to the hut of the mother or one of her female relatives, where it is secluded until its naming ceremony, about six days later. Only after the naming is the child considered to be a member of society. A second child should not be born while the first is still suckling, i.e. for about two years. When the child is about four or five months old it is ritually immunized against the dangers of sexual activity, and the parents may resume relations. Elaborate magical precautions are taken to ensure the child's survival. Children sleep with their mother, the boys until they are old enough to go to the boys' dormitory, and the girls until marriage.[1]

Initiation

The yearly initiation ceremonies, *unyago*, are the principal cultural institution of the Yao. That for the boys, *lupanda*, is the most important, and may only take place under a chief or superior village headman, whereas a girls' initiation ceremony may take place under an ordinary headman. The right to hold a boys' initiation ceremony therefore becomes a mark of status which is jealously disputed.[2] The right is expressed as 'having a *cinda*'. A *cinda* is the small basket in which the special sacrificial flour is carried.

Yao carry out initiation between the ages of seven and eleven, whereas generally in East Africa it is postponed until puberty.[3] In response to requests from the headmen the chief appoints the time and place of the boys' initiation ceremony for a group of villages. It is held at the end of the dry season, before the bush is burned. Each initiate is accompanied by a sponsor, *ahamusi*, who may be a brother, uncle, or friend. Before they set out for the place appointed to be *lupanda*, they all assemble before the chief to be anointed with millet-flour specially prepared by his head wife. The word *lupanda* refers to a forked stick over which the sacrificial flour is poured. This stick is planted at the place of assembly, the *mauhase*. The boys, their sponsors, and the master of ceremonies, *m'mirira*, are accompanied with dancing as far as *mauhase* by their friends. The next day the initiates go to a spot in the bush, where the circumcision (formerly only an incision) is performed, and remain in the bush school, *ndagala*, for about two months, until the wounds are completely healed. The Yao circumcision rite is said not to have been introduced by the Arabs.[4]

During these weeks the boys are subjected to rigorous discipline and instructed in various skills and tribal lore. They sleep in long dormitory huts, with partitions dividing the boys of different villages from each other. The chief appoints the day for

[1] Warner, 1906, pp. 109–5.
[2] Swanson and Dewey, 1913, p. 119.
[3] Duff, 1905, p. 312.
[4] Livingstone, 1874, p. 81.

1: Tew E-4 (no date) 1950 FT7 Yao FT7

return to the *lupanda*, where the initiates are welcomed by their friends. An essential part of the ceremony which takes place at this stage is the exhibition of animal shapes made by the *m'mizwa*, with mounds of earth outlined in flour. These animal shapes differ from lodge to lodge. On the last night before the return to the village the initiates undergo a ceremonial bathing, each boy being carried to the stream by a woman, who thereafter is addressed as 'elder sister'. Finally, with new names, and freshly oiled and decorated, they march to the chief's village to be redeemed by him from the *m'mizwa* with gifts of cloth. After initiation it is a deadly insult to call a boy by his child-name. All who pass through initiation together consider themselves bound by mutual obligations of hospitality.[1]

Girls' initiation takes place in three stages. First, there is *cipoto*, the general initiation before puberty, which corresponds to the boys' *lupanda*. It takes place at the same time of year, and though it lasts for less than a week, its conclusion is celebrated at *lupanda* jointly with the conclusion of the boys' initiation. A hut is built in the bush, like the long dormitory of the boys, and four days are spent in dancing and singing. Each girl (aged about eight years) is accompanied by a sponsor, a woman friend who continues to be her mentor during subsequent rites, and who assists in giving the girl instruction in her womanly duties. At the end the girls are bathed and anointed, dressed in new clothes, and each is carried to *lupanda* by her sponsor. Here they prove their skill in dancing and receive gifts from their friends. Ritual deflloration follows the *cipoto* initiation.[2] Among Mohammedans, clitoridectomy used to be performed by a woman operator, but, it is said, was discontinued in about 1917 on account of the heavy mortality.[3]

After this first general celebration, first pregnancy and first birth are the occasions of separate rites for each girl. According to some informants there were once two ceremonies connected with pregnancy. One, for the young married men whose wives had not yet conceived, used to take place at the same time as *cipoto*; each man was attended by a woman sponsor not his wife, given good advice, and put through various tests of manhood. Mitchell does not confirm the present existence of this ceremony, but in the old days if a man was betrothed or married to a child going through her *cipoto* he had to accompany her.

The *litiwo* ceremony takes place when a young married woman quickens with child for the first time.[4] The woman, with her sponsor and the married women of the neighbourhood, went out in procession for a ceremony of singing and dancing and instruction to the young couple, followed by a feast. Nowadays no men are allowed to attend *litiwo*. A child born of a woman who had not undergone this rite used to be buried alive; nowadays her *anyewe mbumba* is charged by the chief.

Finally, six days after the first child is born, its naming ceremony forms a last initiation rite for its mother. The husband is formally led into her hut by her sponsor and the married women of the neighbourhood, and the child is taken out for the first time to the accompaniment of feasting and dancing.

Most Yao men and women act as sponsors of initiates at least once, and all parti-

[1] Sources for boys' initiation: Stannus and Davey, 1913; Werner, 1906, pp. 124-6; Stannus, 4, 1922, pp. 247-63; Henkel, 1935, pp. 19 ff.; Johnston, 1897, p. 409; Weule, 1, 1909, p. 304.
[2] Stannus, 4, 1922, p. 234.
[3] Ibid., 1, 1912, p. 198.
[4] Ibid., 4, 1922, p. 274; Henkel, 1935, p. 23, *ulile* is *ulumbo* (belly).

cipate yearly in the great initiation festival for boys and girls. Consequently as they repeat each year the lessons of their own initiation, the ceremonies are the main vehicle of Yao culture.[1]

There are also two Muslim ceremonies:

(i) *Jando*, the boys' Muslim baptism, which takes about seven days, and is usually worked in with *kanda*;

(ii) *Nsondo*, the girls' Muslim baptism, which is the same as *jando*, but usually quite separate from *cipoko*. It is important that the wife of a Muslim should have her *nsondo* so that she knows how to prepare the food properly at Ramadan.

Menstrual and Other Taboos

Menstruation is held to be dangerous. A special mat is used by the woman during this time, and is rolled up and kept during the rest of the cycle. The hut is completely cleansed after menstruation. Intercourse during menses leads to disease of the man. Sexual contact is dangerous to persons at certain other periods: during initiation ceremonies, during mourning, and for babies who have not been through the protective rite. The danger is thought to lie in *ndoka*, a dread disease characterized by swelling. This may be transmitted by salt in the food. Deaths are often attributed to 'salt'. Much of the significance of the mourning is that medicines are prepared which protect the mourners against the dangers attendant on sexual activity.

Burial Rites

News of a death must be sent to the chief by a messenger carrying a single fowl. The chief gives a present of calico for wrapping the body, and a goat for the burial men. These are called *mnilo*, neighbours unrelated to the dead, who volunteer for certain duties. They prepare the body for burial and carry it in procession to the graveyard outside the village. No uninitiated person is allowed to see the funeral. All who attend the burial are prohibited from sexual intercourse for one month. After this time the prohibition is lifted by a ceremony of beer drinking and feasting, and on the following day all fires in the village are extinguished, and then relit, and the mourners are shaved. A year later beer is brewed for a final ceremony.

For a period after her husband's death a widow is unclean, and has to be purified by ritual intercourse with a man who is paid. The widow is not allowed to remarry for two or three years. A widower leaves his wife's village, after receiving a parting gift. The widows of ordinary persons are not inherited. If a man has himself a 'name' (rank and social position), he has an heir, who inherits also the wives of his predecessor. But if the heir (the maternal nephew) has married a cross-cousin (mother's brother's daughter) he would not consider the wife's mother as his inherited wife.

Before the burial the dead man's hut used to be destroyed, together with his possessions. Immediately afterwards a consultation is held as to whether retaliatory action against sorcerers is called for. The *mnilo*'s duties include not only the conducting of the burial, but also the subsequent inquiry and the conduct of the second ceremony, the beer drinking, at which they shave the mourners. A man who has

[1] Main sources for girls' initiation: Hechel, 1933, p. 19; Swanson, 1, 1910, pp. 189–7; 4, 1910, pp. 269–79; Swanson and Dewey, 1913; Duff, 1903, pp. 310–13; Abdullah, 1919, pp. 16–17; Macdonald, 1882, vol. 1, pp. 125–30; Werner, 1906, pp. 106–7; Johnston, 1897, p. 410.

2: Mitchell E-5 (1946-1949) 1956 FT7 Yao FT7

The chief identifies a man who comes to see him in exactly the same way, and the Administration has adopted a similar system, except that it has its own definition of the village. During the initiation ceremonies, the initiands[1] are housed in long grass sheds which are subdivided into sections. Each section or room of the long shed houses the boys or girls from one village. If villages share a burial ground, they have allotted portions where they bury their dead separately. In these and many other ways the village is looked upon by the Yao as a distinct unit in the chiefdom.

The chiefdom in the old days was distinctly a territorial unit and all the villages within that area recognized the superiority of the chief. The boundaries of the old chiefdoms were marked by rivers and hills and fixed after conquest and agreement. They are still well remembered. Modern chiefdoms are defined in their limits partly by Government decree and partly by custom. When Principal Headmen were appointed, the districts under them were demarcated with 'due regard being given to the composition of the Native population'. The traditional areas under the various chiefs, therefore, were recognized by the Administration as districts, so that the districts or their sections almost coincided with the chiefdoms. Some disputes between chiefs over boundaries have occurred from time to time and the Administration has had to arbitrate. For example, the Provincial Commissioner of the Southern Province reported a difference between Liwonde and Kawinga in 1936,[2] but through time these differences have been eliminated.

Traditional and Administrative boundaries do not coincide in a few places, for two reasons. Firstly, the Administration has accepted an obvious and physical boundary in preference to an indistinct and social boundary. It has taken the Domasi River as the boundary between Ntumanje and Mposa, though in fact a few villages under Mbela, Kawinga III's son, live on the south side of the river, and fall for Administrative purposes in Ntumanje's area. Mbela is still very strongly associated with Kawinga in ritual and kinship matters. His dealings with the

[1] I am grateful to Prof. Schapera for suggesting this word for those who are undergoing initiation ceremonies. The parallel is with graduands, *i.e.* those who are undergoing graduation ceremonies.

[2] *Report of the Provincial Commissioner, Southern Province* (1936), 20.

2: Mitchell E-5 (1946-1949) 1956 FT7 Yao FT7

622 robes (a gown not unlike a woman's dressing-gown), wears a
559 bright-coloured turban, and has one or two men walking behind
292 him, he is a rather important village headman. One particular item of clothing in the Kawinga, Liwonde and Nyambi areas, is the scarlet headband which some village headmen may wear. I shall discuss this later in the context of the competition of village headmen for rank.

622 Another external characteristic of rank, which seems to have
559 disappeared with the changing economic structure of Nyasaland,
411 was the carrying of knives (*ukwejo*) by important village headmen. Previously, status was indicated by the type and size of knife carried in public. The chief usually carried the largest and most ornate. The knife taken from Kawinga on his surrender in Portuguese East Africa was about 18 inches long and had a decorated ivory handle. Smaller knives of similar pattern belonged to his headmen.[1] Nowadays, many young commoners carry knives two or even three feet long, made from the broken blades of motor-car springs.

622 The right of important village headmen to build fences[2] at
559 the back of their huts is also a mark of prestige which seems to
351 have lost its significance. About 50 years ago only important headmen had the right to erect a fence at the back of their huts. [562] This fence, made of tall grass about six feet high, enclosed the grain stores and other food supplies of the household and formed a private compound in which the headman's wife and slaves carried on their daily tasks.[3] It seems likely that private compounds and slavery were positively associated, so that only the important village headmen who had many slaves found it necessary to build fences. All chiefs and most important headmen to-day still erect these fences. [88] Those who hold initiation rights are obliged to build them because, when the initiands return from the seclusion phase of the initiation ceremony, they are supposed to spend one night in the headman's private compound before going back to their villages. But nowadays, minor village headmen and commoners also frequently build these

[1] See f.n. 4, Chap. II, p. 38.

[2] *Lutenje*, pl. *ndenje*. The enclosed space or 'compound' is *cimbundi*. Typical hut compounds are depicted on Plate IX (*a*) and (*b*), facing p. 206.

[3] MacDonald suggests that the common term *kuyeto* for woman is derived from the adverb *kuyeto*—on the other side (of the fence).

622 554 648 annuity. This recognition publicly announced their superior status, because not all headmen could be Administrative headmen. We do not know exactly how the Administrative headmen were appointed when the Ordinance was introduced. The observable results, however, are that no headman, as far as I am aware, who was of superior status in the indigenous ranking system, is not an Administrative headman to-day. Being an Administrative headman is then in itself an indicator of rank.

622 554 643 415 769 881 Rather more important than this is the right to hold initiation ceremonies. MacDonald says that these rights were held by the chief only, but it is not clear whether the word 'chief' used here refers to the village headmen or the 'chief of the land'. Nowadays, the rights are held by village headmen as well as the chief. The right to hold initiation ceremonies is signified by the possession of a small flat basket (*ciselo*) in which the oblational flour for the ceremonies is carried. When a chief grants a *ciselo* or oblational basket to a village headman, what in fact he does is to grant him permission to approach the spirits of his ancestors. The headman uses the basket on three occasions during the initiation ceremonies. First, before the ceremony is announced he pours a little cone of sorghum meal at the root of a special tree in or near the village. This tree is known as the *nsolo*, or the shrine-tree where all offerings to the ancestors are made. While he works the flour through his fingers to allow it to fall in a cone, he calls on his ancestral spirits and asks them to intercede on his behalf with the spirits of the chief's ancestors. He then formally requests permission to hold the initiation ceremony. This cone is left intact through the night. Should it collapse the interpretation is that the spirits are not willing that the ceremony should take place and it is postponed for some days. Offerings are made until eventually the cone, by remaining intact through the night, indicates that all is propitious for the ceremony to be conducted. The second occasion when the oblational basket is used is when the village headman or chief goes down to the grass sheds where the rites of segregation and aggregation take place. Here he pours flour over a twig and begs the safe conduct of the initiands through this physically and mystically dangerous period. Third, each individual initiand, and his or her mother, is touched on the forehead and forearm with the flour on the evening that the initiands leave for the grass sheds. During

2: Mitchell E-5 (1946-1949) 1956 FT7 Yao FT7

the last rite the owner of the oblational basket exacts a payment of threepence or so from each parent. The headman does gain financially from the initiation ceremony, but it would be wrong to imagine that this is the only reason why he should want to have the right to hold it. The competition for the rights, which are limited to a few, is part of the general political process whereby village headmen compete for privileges and advantages over their fellows.

Village headmen may hold either the boys' or the girls' initiation ceremonies, or both. Sometimes, when they hold both, they delegate the girls' ceremony to a younger brother or some other relative without referring to the chief. For example, Kawinga's clan relative and important retainer, Ngalawanga, had the rights to both initiation ceremonies, and he allowed his perpetual 'son' Isa [1] to hold the girls'. Also in Nyambi area, Majaja, who had both initiation rights, allowed his perpetual 'son' Nantunga to have the girls' ceremony. It is generally conceded that the right to hold the boys' initiation ceremonies is more valuable than the right to hold the girls'. H. L. Duff, writing in 1906, had also noticed this when he wrote:

> The respective ceremonies seem to be considered as on a somewhat different footing, for the boys' *inyago* can properly be held only at the village and under the patronage of, so to say, the paramount chief of the neighbourhood, whereas the girls' initiation may take place under the auspices of an inferior headman. This distinction is still jealously observed and any breach of the chief's privileges is apt to lead to bitter dispute.[2]

The sanction the chief holds over the headmen in this respect is mystical. A village headman believes that the initiation will be a success (that is, that the initiands will be free from the harm of wild beasts and illness, or the circumcision wounds of the boys will heal quickly and well), only if the approval of the chief's ancestors is obtained. He cannot hold the initiation ceremonies, unless he has obtained the basket from the chief.

Most people still follow tribal initiation customs, but in the extremes of the area in which I worked, religious ideas are bringing about a change. In the north in Jalasi's area where Islam

[1] The first Isa was the son of Ngalawanga and this relationship is preserved by the modern incumbents of the headmanships. See Chap. V, p. 122.

[2] Duff, H. L., *Nyasaland under the Foreign Office* (London, 1906), 312.

2: Mitchell E-5 (1946-1949) 1956 FT7 Yao FT7

881 178 795 622 554

is most powerful, there is a tendency for the Islamic initiation ceremony for boys, *jandu*, and the Islamic initiation ceremony for girls, *nsondo*, to displace the tribal equivalents, *lupanda* and *ciputu*. These Moslem initiations are conducted by Moslem teachers (*mwalimu*) and are not controlled by the chief. Though it also involves the circumcision of the boys, *jandu* is very much shorter and the boys are secluded for only a week. Some say it is becoming more popular because it is less expensive for the boys' parents. In Chiwalo's area the two ceremonies are run concurrently. The boys and girls go through the normal segregation rites at the beginning of the ceremony, but an *mwalimu* circumcises the boys according to Islamic practice. At the aggregation rites at the end of the period of seclusion, the star and crescent appears as one of the symbols along with the whale (*namungumi*), antelope (*mbalapi*), leopard (*cisuwi*), and the other tribal effigies which are shown to the boys. Christianity in the south has had a similar effect. The Missions actively discouraged initiation ceremonies in the past. Many of the people in Mposa's and Malemia's area have dropped the custom, or have integrated prayers and other parts of Christian ritual into the ceremonies, though circumcision is steadfastly retained. The effect of these changes is that the important ritual control the chief had over the ceremony has been undermined, and so the prestige attached to it has also begun to fade in these areas. What I describe about the prestige of village headmen and the rights they have to initiation ceremonies is only partially true, and is falling away daily. The correlation I seek to establish is also disturbed by the fact that among the Nguru there is a slightly different initiation ceremony (*cidodoto*) for boys. Most Nguru send their boys to the Yao initiations but there are still some who hold their own traditional ceremonies. These are not within the mystical control of the chief so that some Nguru headmen are outside the competition for the initiation rights. I should say, however, that most compete with the Yao for Yao initiation rights so that this factor is not as disturbing as appears at first sight. In addition, village headmen who move into a new area usually must obtain the permission of the chief before they may use the initiation rights they held before coming into the area.

622 554 576

There are other indicators of the general high rank of village headmen. Junior headmen, like commoners, must give a special

2: Mitchell E-5 (1946-1949) 1956 FT7 Yao FT7

European-type clothing. In Nyambi area, abutting on Kawinga-Liwonde area in the north, there are 12 Administrative village headmen out of 57 who are entitled to the scarlet headband (21 per cent). For the Kawinga-Liwonde area the percentage is 5·7. An informant explained why a large proportion of headmen in Nyambi area had the right to wear the headband: 'The old Nyambis and the present one do not care. If a man has many huts, and if he says that his uncle had a scarlet headband, then he is given one too.' Even within the Kawinga-Liwonde area there is some variation in the number of headmen who are entitled to the scarlet headband. The following table sets this out.

Chiefdom	Total Admin. Headmen	% Scarlet Headbands
Kawinga	160	3·7
Liwonde	104	4·8
Mposa	30	10·0
Chikweo	48	8·4
Ngokwe	21	14·2
Chamba	61	4·9

Mposa area near Lake Chirwa shows such a high proportion because of the Nyanja *ex*-chiefs who are entitled to the scarlet headband. Chikweo and Ngokwe on the other hand are the Mpotola chiefs and seem to have taken the same attitude as Nyambi and his predecessors. In contrast to the statement about Nyambi, one Administrative headman in Mposa's area said: 'The chief's scarlet band is good enough for us all. If each had one it would be too gaudy!'

The Struggle for Initiation Rights

Village headmen are generally outside competition for the right to wear the scarlet headband. These rights have been established largely by ancient custom and are almost confined to the Invaders or to those who have had them before they came into the area. The competition for initiation rights, however, goes on steadily. H. L. Duff had noticed this as early as 1906.[1] Newcomers may approach the chief and agitate for the rights,

[1] See p. 81.

2: Mitchell E-5 (1946-1949) 1956 FT7 Yao FT7

622 554 881 pressing their claims on many grounds. They may stress that they have a large village under them and that they have many children to initiate, and argue that their villages are far away from the nearest headman who has these rights. Or they may use their rank and connection with the chief. If all else fails they may threaten to move to another chiefdom. Punyu threatened to do this.

622 554 881 578 In 1947, Punyu, an Administrative village headman in Chiwalo area, had 43 tax-payers under him and thought that he should have initiation rights. He had come to Chiwalo's in 1933 after the village had split in Chikowi's area near Zomba. He had relatives in Kapaloma's village in Chiwalo's area. He argued with Chiwalo that his uncle had had initiation rights. Chiwalo on the other hand, argued that Punyu village was so close to his own—a matter of under a mile—that he could not consider it. This argument went on for some months. Eventually Punyu told the chief that he was going to leave his area. Chiwalo then recanted to some extent and offered Punyu the permission to use the *ciputu* basket, that is, the right to conduct girls' initiation ceremonies. Punyu, after consulting his sister, took this and was satisfied.

But the chief is not always cowed by the threat to leave his area. He is sometimes able to draw on his official position to control his headmen. The argument between Makata and Ntimbuka illustrates this very well.

Makata was an Administrative headman of some standing in Chiwalo's area. He had been one of the invading headmen and was entitled to wear the scarlet headband. In 1947, he had 101 tax-payers under him and had been given the right to hold boys' and girls' initiation ceremonies at least 30 years ago. Ntimbuka on the other hand was a comparative newcomer. He came from Kawinga's area in about 1930. He is of Nyanja stock but has adopted the Yao language and customs. His village in 1947 had 23 tax-payers and was about 300 yards from Makata's. Early in 1947, Ntimbuka started quarrelling with Makata about the right to boys' initiation ceremonies. He felt that he ought to have rights as well as Makata. Eventually he told Makata that he would refuse to take the boys to his initiation ceremonies. Seething with discontent Ntimbuka went to complain about Makata to Chiwalo, and told him that he had had an argument with Makata and that he was going to leave the area because of it. Chiwalo called Makata and asked him what the trouble was. Makata told Chiwalo that Ntimbuka was jealous of the basket. Chiwalo

2: Mitchell E-5 (1946-1949) 1956 FT7 Yao FT7

then told Ntimbuka that he could not give a sacrifice basket to him because his village was so close to Makata's. Ntimbuka was not satisfied with this and continued agitating. Chiwalo, at last exasperated, threatened Ntimbuka that if he had any more trouble he would send him to Kawinga to be dealt with. Kawinga of course is the Native Authority in the area and holds the power of arresting headmen under Section 12 of the Ordinance. Ntimbuka was duly cowed by this threat and meekly agreed to send his boys to Makata's initiation ceremonies.

Chiwalo had to support Makata against Ntimbuka. Makata was a powerful headman: he had rank from his descent and a large village under him. Ntimbuka was a Newcomer and he had only a fifth of the followers that Makata had. If it meant losing followers it was better to lose the smaller village. As it was Chiwalo could use the power of the White Administration to keep Ntimbuka within his area and yet keep him subservient.

A Newcomer is unlikely to be given both boys' and girls' initiation rights. He is more likely to be able to get only one of the rights. Table XVI sets out the number of headmen in

TABLE XVI

NUMBERS OF HEADMEN HOLDING BOYS' AND GIRLS' INITIATION RIGHTS AMONG ABORIGINAL, INVADER AND NEWCOMER HEADMEN

Type of Initiation Right	Aborigines	Invaders	Newcomers	Total
Both boys' and girls' init. rights . . .	—	17	14	31
Boys' init. rights only .	1	6	10	17
Girls' init. rights only .	1	12	31	44
No init. rights . . .	16	84	198	298
Total	18	119	253	390*
% Init. holders . .	11·5	29·4	21·7	24·5

Combining Aboriginal and Invader totals.

$n = 3$; $\chi^2 = 6{\cdot}48$; $p = 0{\cdot}09254$.

* Total excludes the 24 headmen who have the right to wear the scarlet headband.

each category who hold initiation ceremonies. While more Invaders have the right to both ceremonies the proportion holding

2: Mitchell E-5 (1946-1949) 1956 FT7 Yao FT7

622
554
811

only one is roughly the same.[1] A Newcomer may approach the chief and ask for initiation rights in certain circumstances only. In general, these are that his village is a very large one, that he had the rights in the area from which he has just come, and/or that he is living in so isolated a part that it would be a hardship for his children to go to the nearest other headman who holds the rights; but he may press his claim if he is related to the chief and can approach him as a kinsman.

There is little doubt that the rights are closely associated with the size of the villages:

TABLE XVIIa

INITIATION RIGHTS AMONG INVADER AND NEWCOMER HEADMEN WHO HAVE VILLAGES WITH MORE AND LESS THAN 60 TAX-PAYERS

(The figures in brackets are percentages)

Type of Init. Right	Over 60		Under 60		Total
	Invader	Newcomer	Invader	Newcomer	
Both init. rights . .	10 (32·3)	9 (29·0)	7 (22·6)	5 (16·1)	31 (100·0)
Boys' init. rights only .	2 (12·4)	5 (31·3)	4 (25·0)	5 (31·3)	16 (100·0)
Girls' init. rights only .	2 (4·8)	13 (31·0)	10 (23·8)	17 (40·4)	42 (100·0)*
No init. rights	9 (23·2)	26 (9·3)	75 (26·8)	170 (60·7)	280 (100·0)†
Total . .	23 (6·2)	53 (14·4)	96 (26·0)	197 (53·4)	369 (100·0)

$n = 3$ ‡; $\chi^2 = 53·49$; $p < 0·0001$.

* Excludes 1 village whose size was unknown.
† Excludes 2 villages whose sizes were unknown.
‡ Combining Invader and Newcomer groups.

[1] Invaders with both initiation rights (17 of 119) = 14·3 per cent; Newcomers with both initiation rights (14 of 253) = 5·5 per cent; Diff. of per cent = 8·8; S.E. of diff. = 3·07; C.R. = 2·85; $p = 0·0044$.

Invaders with rights to only one of the initiations (18 of 119) = 15·1 per cent; Newcomers with rights to only one of the initiations (41 of 253) = 16·2 per cent.

2: Mitchell E-5 (1946-1949) 1956 FT7 Yao FT7

TABLE XVII*b*

INITIATION RIGHTS AMONG INVADER AND NEWCOMER HEADMEN WHO HAVE VILLAGES WITH MORE AND LESS THAN 60 TAX-PAYERS

(Arranged to hold the influence of village size fixed)

Type of Headman	Over 60		Under 60		Total
	Init.	No Init.	Init.	No Init.	
Invaders . .	14 (11·8)	9 (7·6)	21 (17·6)	75 (63·0)	119 (100·0)
Newcomers .	27 (10·8)	26 (10·4)	27 (10·8)	170 (68·0)	250 (100·0)
Total . .	41 (11·1)	35 (9·5)	48 (13·0)	245 (66·4)	369 (100·0)

$n = 3$; $\chi^2 = 3{\cdot}96$; $p = 0{\cdot}26667$.

Among all headmen (Table XVII*a*):

19 of 31 headmen who hold both initiation rights have villages with more than 60 tax-payers . . . . . = 61·3%
7 of 16 headmen who hold only the boys' initiation rights have villages with more than 60 tax-payers . . . . . = 43·7%
15 of 42 headmen who hold only the girls' initiation rights have villages of more than 60 tax-payers . . . . . = 35·7%
35 of 280 headmen who hold no initiation rights have villages with more than 60 tax-payers . . . . . = 12·5%

When the influence of village-size is held constant the advantages of Invaders over Newcomers in the competition for initiation rights is discernible, but the differences are so small that they are of doubtful significance (Table XVII*b*).

14 of 23 Invader headmen with villages over 60 tax-payers have initiation rights . . . . . = 60·9%
27 of 53 non-Invader headmen with villages over 60 tax-payers have initiation rights . . . . . = 50·9%
21 of 96 Invader headmen with villages less than 60 tax-payers have initiation rights . . . . . = 21·9%
27 of 197 non-Invader headmen with villages less than 60 tax-payers have initiation rights . . . . . = 13·7%

As we may anticipate, relationship with the chief is an important factor in the competition for initiation rights. Among the chief's direct and clan relatives for example, 36·4 per cent (51 of 140) hold initiation rights, but only 16·8 per cent (39 of

2: Mitchell E-5 (1946-1949) 1956 FT7 Yao FT7

622
643
554
881

TABLE XVIII

INITIATION RIGHTS AMONGST INVADER AND NEWCOMER HEADMEN WHO ARE RELATED AND UNRELATED TO THE CHIEF

Type of Initiation Holder	Invader				Newcomer				Total
	D	C	N	T	D	C	N	T	
Both init. rights .	5	8	4	17	2	3	9	14	31
Boys' init. rights only	2	2	2	6	1	1	8	10	16
Girls' init. rights only	5	5	2	12	5	12	14	31	43
No init. rights . .	26	25	33	84	13	25	160	198	282
Total	38	40	41	119	21	41	191	253	372
% Init. holders .	31·6	40·0	24·2	29·4	38·1	39·0	19·4	21·7	24·2

D = Direct relatives; C = Clan relatives; N = Non-relatives; T = Sub-totals.

Combining Invader and Newcomer totals.

$n = 6$; $\chi^2 = 22{\cdot}24$; $p = 0{\cdot}00112$.

232) of his non-relatives hold them [1] (Table XVIII). There is a slightly greater proportion of the clan relatives holding initiation rights than direct kinsmen, but the difference is insignificant.[2] Slightly more of the chief's relatives among the Newcomers hold initiation rights than those among the Invaders,[3] but once again the difference is so small that it might easily have arisen by chance. A much greater proportion of Invaders is related to the chief than of Newcomers,[4] so that among the Invaders the relative advantage of their kinship with the chief, as against the unrelated, is somewhat reduced. There are very many Invaders who can claim kinship with the chief in their struggle for initiation rights. Among the Newcomers, conversely, because there

[1] Diff. of per cent = 19·6; S.E. of diff. = 4·58; C.R. = 4·28; $p = 0{\cdot}00002$.

[2] Direct relatives (20 of 59) = 33·9 per cent; Clan relatives (31 of 81) = 38·3 per cent; Diff. of per cent = 4·3; S.E. of diff. = 8·2; C.R. = 0·52; $p = 0{\cdot}6030$.

[3] Newcomers (24 of 62) = 38·7 per cent; Invaders (27 of 78) = 34·6 per cent; Diff. of per cent = 4·1; S.E. of diff. = 8·2; C.R. = 0·5; $p = 0{\cdot}6170$.

[4] Excluding those entitled to wear the scarlet headband. Invaders (78 of 119) = 65·6 per cent; Newcomers (62 of 253) = 24·5 per cent.

2: Mitchell E-5 (1946-1949) 1956 FT7 Yao FT7

622
643
554
881

are so few of the chief's kinsmen among them, to be related to the chief is a distinct advantage in this struggle.

I recorded the origin of the initiation rights of only 38 of the 55 Newcomer headmen who hold these, excluding those who also have the right to wear the scarlet headband. Table XIX sets out these data. We cannot put too much reliance on these

TABLE XIX

THE ORIGIN OF INITIATION RIGHTS OF SOME NEWCOMER HEADMEN

Type of Initiation Right	Given by Chief of present residential chieftaincy	Brought from elsewhere	Total	% Brought in
Both init. rights . .	8	5	13	38
Boys' init. rights only .	9	0	9	0
Girls' init. rights only .	15	1	16	6
Total	32	6	38	16

figures because they cover only about three-quarters of the village headmen in this category, and these, moreover, were not randomly selected. As they stand, the figures support my earlier conclusion that Newcomers are more likely to obtain rights for only one initiation ceremony, than for both together. While 38·5 per cent (5 of 13) of the village headmen who hold both initiation ceremonies had brought in their rights with them from outside, only 4·0 per cent (1 of 25) of those who hold only one of the rights had done so.[1] An analysis of the periods when headmen were given their rights reveals consistent results.

From Table XX we see that:

Of 11 Invaders who hold rights to both initiation ceremonies, recent chiefs granted 3 . . . . . = 27·3%
Of 8 Newcomers who hold rights to both initiation ceremonies, recent chiefs granted 2 . . . . . = 25·0%
Of 12 Invaders who hold rights to only one of the initiation ceremonies, recent chiefs granted 3 . . . . . = 25·0%
Of 24 Newcomers who hold rights to only one of the initiation ceremonies, recent chiefs granted 14 . . . . . = 58·3%

[1] Diff. of per cent = 34·5; S.E. of diff. = 12·47; C.R. = 2·77; p = 0·0056.

2: Mitchell E-5 (1946-1949) 1956 FT7 Yao FT7

TABLE XX

WHEN INITIATION RIGHTS WERE GRANTED TO NEWCOMERS AND INVADERS

622
643
554
881

Type of Initiation Right	By early Chiefs		By recent Chiefs*		Total
	Invaders	Newcomers	Invaders	Newcomers	
Both init. . .	8	6	3	2	19
One init. only .	9	10	3	14	36
Total . . .	17	16	6	16	55

* This is obviously a crude classification. I have taken roughly 35 years as the dividing line. As the early chiefs I have classified all the Kawingas before and including Kawinga V who died in 1913; all the Liwondes before and including Liwonde III who died in 1921; all the Ngokwes before and including Ngokwe IV who died in 1905; all the Mposas before and including Mposa II who died in 1913; and all the Chikweos before and including Chikweo II who died in 1914.

In other words, recent chiefs have been granting single initiation rights to Invaders in the same proportion as they have been granting both rights, but they have been granting Newcomer headmen the right to hold only one ceremony more often than the right to hold both. Of the six sets of rights to initiation ceremonies granted by recent chiefs to Invader headmen, three were rights to hold only one ceremony, while 14 of the 16 initiation rights granted to Newcomer headmen were for one ceremony only.[1]

622
554
881
795
619

Headmen do not make use of their bonds of common religion or tribe with the chief in their competition for initiation rights. Table XXI sets out the numbers of headmen of different religion. There is a substantially smaller proportion of Pagan headmen (9·7 per cent) holding initiation ceremonies than either Christians (25·5 per cent) or Moslems (24·4 per cent).[2] Most Pagans, however, are also Newcomers so that this difference is actually a reflex of the generally lower rank of Newcomers. Table XXII sets out the number of headmen of the chief's tribe and of other

[1] i.e. 50·0 per cent against 87·5 per cent; diff. of per cent = 37·5; S.E. of diff. = 20·08; C.R. = 1·87; p = 0·0614.

[2] Pagans = 9·7 per cent; Others 24·6 per cent; diff of per cent = 14·9; S.E. of diff. = 7·94; C.R. = 1·88; p = 0·0603.

2: Mitchell E-5 (1946-1949) 1956 FT7 Yao FT7

622
554
881
795
619

TABLE XXI

THE DISTRIBUTION OF INITIATION RIGHTS AMONG HEADMEN OF DIFFERENT RELIGIONS

Type of Initiation Holder	Moslem	Christian	Pagan	Total
Both init. rights . .	25	4	1	30*
Boys' init. rights only .	12	4	—	16
Girls' init. rights only .	31	6	2	39†
No init. rights . . .	211	41	28	280‡
Total	279	55	31	365

$n = 6$; $\chi^2 = 5{\cdot}05$; $p = 0{\cdot}53778$.

* Excludes 1 headman whose religion was unrecorded.
† Excludes 4 headmen whose religion was unrecorded.
‡ Excludes 2 headmen whose religion was unrecorded.

TABLE XXII

THE DISTRIBUTION OF INITIATION RIGHTS AMONG HEADMEN OF THE SAME AND DIFFERENT TRIBE AS THE CHIEF

Type of Initiation Holder	Same Tribe	Different Tribe	Total
Both init. holders	20	11	31
Boys' init. holders only . . .	7	9	16
Girls' init. holders only . . .	23	20	43
No init. rights	156	126	282
Total	206	166	372
% init. holders	24·3	24·1	24·2

$n = 3$; $\chi^2 = 2{\cdot}17$; $p = 0{\cdot}54167$.

tribes who hold initiation rights. Once again the proportion of headmen of the same tribe as the chief who hold initiation rights is the same as that of headmen of different tribes from the chief. We may say, therefore, that membership of tribe is not an operative factor in the granting of initiation rights.[1]

[1] The factors contributing to the granting of initiation rights are obviously all interrelated.

2: Mitchell E-5 (1946-1949) 1956 FT7 Yao FT7

622 554 881 292 The right to hold initiation ceremonies may be held concurrently with the right to wear a scarlet headband. For purposes of analysis thus far, I have treated the holding of initiation ceremonies separately. By common consensus, the wearing of this headband is an indicator of much greater rank than the holding of initiation ceremonies. The highest ranking headmen, like the chiefs, usually have the right to wear the scarlet headband together with the rights to both initiation ceremonies. In order to show how rank varies among the main categories of village headmen I have devised a numerical

TABLE XXIII

MARKS OF RANK AMONG ADMINISTRATIVE VILLAGE HEADMEN

Type of Headman	With Headband				Without Headband				Total
	Both	Boys only	Girls only	No rights	Both	Boys only	Girls only	No rights	
Aborigines:									
Direct rel.	—	—	—	—	—	—	—	2	2
Clan rel.	1	—	—	—	—	—	—	1	2
No rel. .	2	—	—	—	—	1	1	13	17
Total .	3	—	—	—	—	1	1	16	21
Invaders:									
Direct rel.	8	1	—	—	5	2	5	26	47
Clan rel.	4	—	—	—	8	2	5	25	44
No rel. .	3	—	—	1	4	2	2	33	45
Total .	15	1	—	1	17	6	12	84	136
Newcomers:									
Direct rel.	—	—	—	—	2	1	5	13	21
Clan rel.	—	1	1	—	3	1	12	25	43
No rel. .	1	—	—	1	9	8	14	160	193
Total .	1	1	1	1	14	10	31	198	257
Grand total	19	2	1	2	31	17	44	298	414

2: Mitchell E-5 (1946-1949) 1956 FT7 Yao FT7

system of ranking. I have assumed that the rarer the mark of rank the higher the rank it indicates. Table XXIII sets out the incidence of marks of rank among the 414 Administrative village headmen for whom I have recorded the data. In all, there were 24 headmen with scarlet headbands, 69 with boys' initiation ceremonies and 95 with girls' initiation ceremonies. I have given the holding of a scarlet headband the value of the reciprocal of the proportion of village headmen who hold that right, i.e. $414/24 = 17{\cdot}3$.

The value of holding a boys' initiation ceremony by the same procedure is: $414/69 = 6{\cdot}0$.

The value of holding a girls' initiation ceremony is: $414/95 = 4{\cdot}4$.

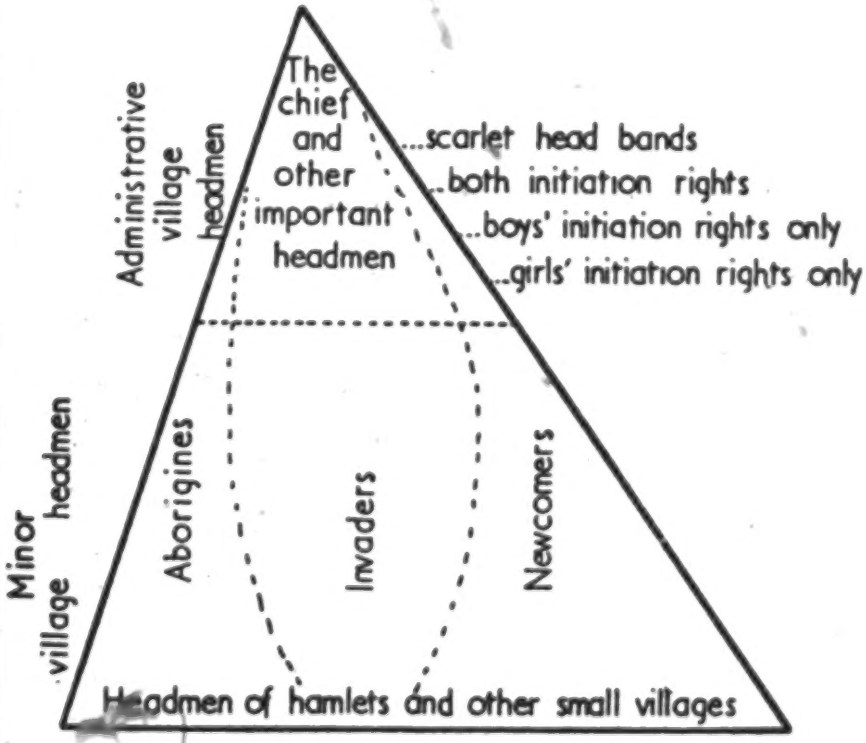

DIAGRAM 3. PARADIGM OF THE POLITICAL STRUCTURE.

2: Mitchell E-5 (1946-1949) 1956 FT7 Yao FT7

622 The value of holding the various combinations of rights then
554 are these :

Scarlet headband and both initiation ceremonies	= 27·7
881 Scarlet headband and boys' initiation ceremony	= 23·3
292 Scarlet headband and girls' initiation ceremony	= 21·7
Scarlet headband alone	= 17·3
Both initiation ceremonies	= 10·4
Boys' initiation ceremony only	= 6·0
Girls' initiation ceremony only	= 4·4

We may now score the rank of headmen within any particular category by estimating the percentage score from a possible. For example, the score of the rank among Aboriginal headmen would be :

3 × 27·7 = 83·1
1 × 6·0 = 6·0
1 × 4·4 = 4·4
93·5 (expressed as a percentage of 21 × 27·7 = 16·1)

622 Using this method I have set out in Table XXIV the rank
554 scores for headmen in the categories in Table XXIII. Table XXIV shows that on the whole ranking among the Invader

TABLE XXIV

RANK SCORES FOR ADMINISTRATIVE VILLAGE HEADMEN OF DIFFERENT CATEGORIES

Aborigines :		
Chief's direct relatives	0	
Chief's clan relatives	50·0	
Chief's non-relatives	14·0	
All Aborigines		16·1
Invaders :		
Chief's direct relatives	25·4	
Chief's clan relatives	18·7	
Chief's non-relatives	13·1	
All Invader headmen		19·2
Newcomers :		
Chief's direct relatives	8·4	
Chief's clan relatives	11·3	
Chief's non-relatives	4·6	
All Newcomer headmen		6·1
All chief's direct relatives		19·6
All chief's clan relatives		15·8
All chief's non-relatives		6·8

621 making the oblation, pours the beer or sprinkles the flour at the
613 root (*lipata*) of a shrine-tree. As would be consistent with this
769 way of looking at the lineage, genealogically-distant ancestors are said to be 'below' (*pasi*), so that if a Yao wishes to say that a certain person was a matrilineal ancestor many generations back, he would say that he was 'very much below'.

The Concept of 'The Mother'

613 The matrilineal descendants of the founder look upon them-
562 selves as having been fed from the same breast and may express
843 this by saying 'we are of one breast'.[1] Deep sentiment is attached to the idea of the mother among the Yao. There is, for example, a sharp distinction drawn between those women who have had children and those who have not. When a woman becomes pregnant for the first time, she is given instruction in child welfare when she undergoes a special ceremony (*litiwo*). This is a ceremony which is publicly announced and attended by most of her matrilineal and other kinswomen and acquaintances. No woman may attend this ceremony if she has not herself had a baby. Thus her change in status in the community is clearly shown by the public recognition of her condition, and the fact that she is initiated into secrets which are shared by other mothers only. Her position in the lineage is much enhanced when she becomes a mother. It is the most important step towards becoming a village founder herself.

562 The concept of 'the mother', in general, also appears in the
601 boys' initiation ceremonies. Certain phases of ceremonies may
881 be conducted only with the help of the women. They have to clap the rhythm to which the 'tailmen'[2] do their dances. Here all women are classified as 'mothers' and without their co-operation the ceremonies could not be conducted. During the same ceremonies three women appear with baskets of food on their heads. The tailmen remove the baskets and sacralize the

[1] *Tuli peŵele pamo.* The word *mlango*, a doorway, is also commonly used. The idea in essence is exactly the same. It is the concept of the children who come to settle around a woman's hut door. It is used as *ŵandu pamlango pao*, the people of his lineage section.

[2] The *m'mchira*. These are the functionaries in the initiation ceremonies. They carry medicated zebra tails during these ceremonies, and this gives them their names. See especially Stannus, 'The Wayao of Nyasaland', 229 ff.

2: Mitchell E-5 (1946-1949) 1956 FT7 Yao FT7

contents. Here once again the women, though they may have no boys in the initiation ceremony, are called 'the mothers'. The ritual co-operation of the mothers in the initiation ceremonies is paralleled by that of mothers and sons in political affairs: here sons are in charge of the villages, while their mothers and sisters form the nucleus of the localized kinship group, which in turn is the core of the village. 562 601 881

The ritual importance of the mother is nowhere more clearly seen than in the curse. The Yao believe that a mother may curse her child if he or she is disobedient or otherwise beyond control. Not many mothers do curse their children; the threat to curse seems to be more often used. Informants have told me of some mothers who have cursed their children, and the procedure and the wording of the curse have always been very similar. It is usually not applied to young children who could be punished by other means, but to adults and particularly adolescents. Usually the mother lifts her breast and points the nipple upwards saying, 'If you have never sucked from this breast nothing dreadful will happen to you.' The consequences of this are greatly feared. Where I have been told of curses, each time the child has either died suddenly shortly after the curse, or at least it has gone mad. The curse is vaguely supposed to operate through the ancestor spirits, but I could get no clear statement on how this happens.[1] Whatever the cause, however, the symbolic action of lifting the breast and the dire effects which are supposed to follow from this, indicate the importance of the mother in the lineage. 562 861 789 [769]

The Yao attach this sentiment, in general, not only to the mother, but also to all senior matrilineal female relatives. In general speech all female members of the matrilineage in ascending generations are 'mothers', and all members in the descending generations are 'children'. This fundamental relation of mother and child extends throughout the lineage. The Yao term *acinangolo*, used for the senior female members of the matrilineage, embodies this idea of 'the mothers'. More specifically, as far as men are concerned, the matrilineage is classified into 562 601

[1] Further evidence that the ancestor spirits are involved in the curse may be that madness is called *masoka*—spirits—and that it may be said of a madman that the spirits are beating him (*gakumputa masoka*). A curse may be revoked by blowing water out of the mouth, an act which is also vaguely connected with the ancestor spirits.

3: Stannus D-5 (ca. 1912) 1922 FT7 Yao FT7

After the defeat of Kumtaja, Chikusi and his Angoni routed Kumtumanja, a brother of Malemya, who had also been making a nuisance of himself. Kumtumanja, who suffered from a large hydrocoele, is supposed to have lost his balance on account of this impediment, and fallen into a stream where he had stopped to drink and to have been drowned. 175 167 648

The Angoni still burned for more warfare, and Malemya, fearing that with his work done, they might prove a nuisance to him, turned them on to the Amangoche Yao around Blantyre. Thither they set off on a raiding expedition and returned to their own country via Chiradzulu. This raid took place in 1884.

During the next few years, Kawinga, who had always held a grudge against Malemya for having got ahead of him to the best country, occupied the chief with raiding and warfare. In 1891, Wandalama died, and was succeeded by Chisala, the son of his sister, Chisigere, and at the present time, he is the reigning Malemya.

It is of these Amachinga Yao under Malemya that the following notes are written. I have gone at some length into the history of these people in order to disarm criticism by those who, familiar with other sections of the Wayao, may not agree with all my statements.

Life History. Generally speaking, the life of the Yao native in the old days was full of ease spiced with the excitement of intertribal warfare. He cultivated his crops, kept a few goats and chickens, and relieved the monotony by hunting. Even domestic slavery was not a great hardship, nor did the Yao probably suffer from coast slave-raiding to the same extent as many other tribes. As children, they are wont to spend their days free from care, seldom reprimanded, and rarely or never physically chastised. During youth, the same easy lot is theirs, with the addition from time to time of a few small tasks; minor household duties for the girls, such as drawing water, sweeping the hut, and "minding" the baby, while the boys hoe or fetch and carry for their fathers in the village or in the bush. Left to their own devices, they play games,[1] dig out rats' nests, or shoot birds with bows and arrows. 181 857

Now, as formerly, when they are about five years old, the girls usually go to live with their grandmother who may thus have a number of children around her; or several girls of a somewhat more advanced age may sleep together in a hut dormitory. Boys of this age all live in a big hut called *nyumba ja chachanda*, "the boys' dormitory." This is their quarters until one by one they leave to get married. The girl, similarly, remains in the girls' dormitory or with her grandmother until she is taken in marriage.

Puberty. The first interruption of this placid life of youth is the onset of puberty or the first initiation ceremonies.[2] Formerly, these ceremonies took place after puberty but of late years, as is pointed out elsewhere, they are performed much earlier. 881

Child betrothal. Bethrothal in childhood or before birth is not uncommon. A woman learning that some friend of hers is pregnant will arrange that if a girl is born, her son will marry the friend's daughter, or a man taking a fancy to a little girl will select her as his 584

[1] Vide infra, p. 357. [2] Vide infra, p. 348.

584 betrothed. In this latter case, the child lives with one of his wives and is brought up in his house.

● 881 When this girl first menstruates, she tells the man's wife who in turn informs her husband. He then goes out into the bush with his axe, while the wife reports to the young girl's mother and to the man's female relatives. The girl is put to rest on a mat in the hut, the women remaining with her after shutting and fastening the door. The man, meantime, cuts a strip of bark, hammers it out into a piece of cloth, and puts the cloth, wound round and round the stem of the tree from which he has taken it, on the roof of the hut where the girl lies. The first passer-by who notices this sign, spreads the news; then all the women in the village assemble and trill with their tongues to show their joy, while the women in the house sing.

Until the girl's menstrual period is over, the old women relatives sleep each night in her hut, and instruct her in the taboos relating to menstruation. The front door is kept closed, and exit for purposes of nature is made only through the back door. When the girl is up again, the fire in the hut is extinguished, the bark-cloth which she has worn and her sleeping mat are rolled up and put away in the veranda-room, and the girl, having procured clay, replasters the floor of the entire hut. A woman then brings fresh fire from another hut.

841 At subsequent menstrual periods, there is no ceremony. The girl, as is the custom of all women at such times, must sleep on a mat apart from her husband. Sexual intercourse is strictly forbidden under penalty of dire sickness. For the same reason, no menstruating woman may put salt in the food, etc. Until the girl's first menstrual period is over, the man to whom she is betrothed stays in the hut of another wife. Later, he may cohabit with the girl.

881 833 If the girl has not been to her initiation ceremony, *Chiputu*,[1] on returning to her husband's hut after this ceremony, the first coitus takes place in the veranda. It must be incomplete, so that ejaculation takes place after withdrawal and the semen falls upon her cloth. This should be taken by the girl to some of the old women in the village who report on the proceedings. Should withdrawal not have taken place, the man is considered bad and the girl, unless doctored, may sicken. Later, ordinary cohabitation is allowed. This species of ceremonial coitus is called *Kusoa mauta* or in Chinyanja, *Ku-tapa mafuta*, "to roll away the oil," referring to the oil with which the girl was anointed at *Chiputu*. A girl who has no betrothed, on returning from *Chiputu* to her grandmother is given medicine similarly to prevent her sickening.

584 *Betrothal and marriage in adult life.* Apart from child betrothal, when a man seeking a wife, sees a girl he fancies, he talks the matter over with his brother, uncle, or some friend, who then goes and makes overtures to the girl's uncle or brother, her guardian or *nponse*[2] as he is called. The *nponse* corresponds very closely to our idea of a god-parent; he may be called the sponsor. The word "surety" is used by Macdonald.[3]

[1] Vide infra, p. 269. [2] *Nponse* is a word adopted from the Chin, *Nhoose*.
[3] Macdonald, op. cit., vol. 1, p. 118.

3: Stanzas D-5 (ca. 1912) 1922 FT7 Yao FT7

769 supposed to be the abode of spirits. Except in the case of chiefs, the Wayao never make any erections over their graves, like the Anyanja grass shelters, and the present-day Mohammedan earth imitations of Swahili tombs.

766 Chiefs, and the more important headmen, are usually buried in their own villages. Over the grave, a grass hut with a veranda is erected; the hut is covered with calico, and guns were formerly set in as veranda posts. Guns and ivory used to be buried with the corpse [567] but these Yao, I am told, never practiced the barbarous custom of burying slaves with their chiefs. Information of the death of a chief was always conveyed to other chiefs by slaves who were kept by the recipient of the message.

Since the time of the old Malemya, the corpse of a chief always lies with its head in the direction of the old chief's grave. The grave is swept around, and the house pulled down as in the case of an ordinary man, but the grave-hut is rebuilt every year and never forgotten.

Since the burial of the dead is more or less correlated with the idea of planting seed from which progeny will spring, the natives will not bury a leper, believing that if they did so, leprosy would spring up all around them. Persons dying of an epidemic disease such as small-pox are dealt with in the same way. In these cases and in that of a man dying of ordeal poison, the body is enclosed in a mat and put up in a tree, a manner of disposing of the dead common among the Anguru and some Anyanja. Concerning death from dropsy, similar precautions are taken to those in the instance of a woman dying in childbirth,[1] and a tube is put down to the body from the surface of the ground.

A leper feeling that the end is near, will ask to be put in a hut built outside the limits of the burial ground. Here, provided with water and food for a few days, he will wait to die near the graveyard wherein he knows he cannot be buried.

Anyone who is wounded with a spear or any other weapon is not taken into the village, [752] but is kept in a hut in the bush. If death results, the mourning ceremonies differ somewhat from the ordinary rites and are much curtailed.

881 **Initiation Ceremonies.** Under this heading I propose to deal with the three ceremonies, *Lupanda*, *Chiputa* and *Litiwo*. They are occasions of great importance in the life of the native and their educative effect for the good of the tribe is far reaching.

At *Lupanda* (*Ndapula*) the young boys attend; at *Chiputa* the young girls go through their initiation and a side ceremony for young married men takes place, while *Litiwo* celebrates the first quickening with child. All the ceremonies are included in the word *Unyago*. Macdonald in *Africana* while referring to "the mysteries"[2] gives scant information about the ceremonies and has, presumably, without much knowledge of what goes on, condemned these customs like many others as furthering "absurd superstitions." He has failed to recognise that they are occasions when a large amount of useful advice is imparted, good manners are insisted on, and tribal custom is made known. Sexual questions are dealt with in these mysteries, and, though mixed up with a large amount of superstition, a

[1] Vide supra, p. 230. [2] Op. cit., vol. 2, ch. 7.

3:Stannus D-5 (ca. 1912) 1922 FT7 Yao FT7

code of morals is imparted which is far reaching for the social welfare. Macdonald makes the statement that "when a girl is initiated, she must find some man to be with her on her return; otherwise she will die."[1] Speaking with reserve as to what happened among the Amangoche around Blantyre Mission thirty years ago, I believe that no such practice is or was part of the Machinga Yao ceremonies. I have heard similar stories from other Europeans but I am inclined to discredit the whole idea as a practice among any section of Yao. Of the Anyanja, I cannot speak with the same conviction. Similarly I believe that the practice of artificial dilatation of the vagina is foreign to the Yao though possibly introduced in some places from the Swahili. 881 177 832

At *Lupanda* and *Chiputu*, the youth have to undergo a good deal of hardship which is all for their benefit, but year by year, as civilisation progresses, greater numbers forego these ceremonies. Their manners and morals suffer in consequence, and one is forced to acknowledge with the "old people" that the younger generation, decked in European clothes, with an air of smug self-conceit, no longer shows that decorum and self-respect which characterise the older, unsophisticated natives. My experience with regard to the attitude of natives to their initiation ceremonies differs from those related in *Africana* and I am afraid that Macdonald's native friends[2] were laughing at the inquisitiveness of the white man and not at their own experience. 881 177

In the *Journal of the Royal Anthropological Institute* for 1913,[3] Dr. Davey and I gave a short account of part of the ceremony at *Lupanda*. Since then, through the friendliness of some of the chiefs in Zomba district, I have been present at several more ceremonies. I have collected a number of fresh observations and made a complete set of sketches of the *inpage* or images in relief made on the ground at one of these ceremonies. I have also a complete account of the boys' ceremonies from a celebrated master of ceremonies or *m'mickila* as he is called, named Mlemala (Kumpika) of Che-chamba, in his own words, with his own songs. In writing down the songs, I have simply recorded the words, without giving the many full and partial repeats, and I have never attempted to score down the airs to which they are sung. 881 124

In the account given below I shall follow Mlemala's practice, giving such variations as I myself have observed. It will be understood that each *m'mickila* has his own way of doing things so that there may be many variations in detail.

Lupanda: Every year, a certain number of boys in a group of villages reach the age at which the ceremony is commonly performed. In response to requests made by the village headmen, the chief appoints a date on which the *unyago* shall be held; this is usually towards the end of the dry season (September) but before the long grass of the bush has been burnt, as this affords the necessary privacy to those taking part. 881

[1] Op. cit., vol. 2, p. 126. [2] Ibid., p. 130.

[3] H. S. Stannus and J. B. Davey, 'The initiation ceremony for boys among the Yao of Nyasaland', (Jour. Anth. Inst., London, 1913, vol. 43, p. 119–132).

3: Stannus D-5 (ca. 1912) 1922 FT7 Yao FT7

●881 The chief, having appointed a day on which the ceremonies shall begin, sends a messenger with a fowl to a medicine-man whom he asks to conduct the ceremonies. The medi-
[791] cine-man is called *m'michila* "he of the tails." He carries his medicines stuffed in the tail-skin of a gnu or sabra and we shall see that his tail or tails play a very important part. Having sent word back to the chief of his acceptance of the invitation, he gets his wife to prepare some fresh castor-oil with which he will remake his medicines, and sends out the boys of the village to collect firewood. A big bonfire is made and dancing goes on all that night in his village. Early next morning he returns to the door of his hut where his wife hands him his "tails." He then immediately departs for the village of the chief. His wife
[201] trills with her tongue, this being the sign of his departure, and dancing men, some friend (often his brother) who acts as his chief assistant, his wife, and others will go with him.

[539] He signals his approach to the chief's village by singing:

"*Ku* *muai'ko* *ngwian,* *ngwian'ni!* *Tinguichal*"
"You at the village! I shan't be long!"

As he enters the village, all the women hail his arrival by trilling the tongue (*ku-lulula*). He goes straight to the open space in front of the chief's house where the chief meets him. The chief immediately goes into his house and producing a cloth, gives it to the *m'michila* who then places his "tail" on the ground, (*ndulila*, "things put down"); these are the signs of the compact. A house is given to the *m'michila* wherein he may rest and sleep.

That night, all the mothers of the boys who are to undergo their initiation, now called *usali* (sing. *musali*), pound flour for the morrow. Early the next morning, the *m'michila* visits the place where the pounding is going on and collects a little flour from each woman's basket into a small basket he himself carries.

The chief then gives him a cock and a hen, an axe and a hoe; with these he goes off accompanied by the fathers of the *usali* to the spot where *Lupanda* will be made. Arrived there, he first points out the spot where his own hut is to be erected. This is quickly built, followed by the shelters for the *usali*.

The cock and hen are then killed and cooked, also some porridge; the entire fowl is cooked; the liver is not cooked separately. When it is ready, the *m'michila* takes a piece of the liver from the pot and some porridge from the other pot together in one hand and then throws them into a little hole where his "tail" has been resting. At this spot, *Lupanda* is made. The *m'michila* then partakes of both again and eats; after he has finished, the other men eat.

[532] After the building of the shelters is finished, fire-wood is collected. On the roofs of the grass shelters figures of animals in grass may be strung up on posts, but they have no definite significance.

In the meantime in the village, the chief has had *ulupesi* (ceremonial flour) prepared. It is made from millet by his head wife, who must not be near a menstrual period.

3: Stannus D-5 (ca. 1912) 1922 FT7 Yao FT7

When the sun sets, all the boys to undergo the ceremonies (*wali*) together with their sponsors or guardians, *akamusi*, (*akamusi* sing.) are called together to the village open-space (*pang'anga*). The *akamusi* attends his ward throughout the ceremony; he may be an elder brother, an uncle, or someone else who volunteers for the service. 881

The *wali* are lined up and headed by a "leader," *nachilompola*, who is usually the most important boy, perhaps a relative of the chief; thus they pass one by one in front of the chief who anoints each on the forehead with *mbepesi* from a small basket. As each boy passes, his mother runs up and throws into the basket a string of beads or nowadays small silver coins. When all have passed, the chief sends some near relative with the basket still containing some flour and the beads or money to the *m'michila* who is waiting at *Lupanda*.

This is his signal to prepare to receive the *wali*; he dresses, and accompanied by drummers goes to meet the file of *wali*. The *wali* accompanied by their *akamusi*, their mothers and sisters, sing as they approach: 881 539 533

"Twaje kanga (angapa) akakuli tawje!"
"Let us go back, perhaps there is no ceremony!"

The *m'michila* as he meets them sings:

"Anachichi pakwina nawo wanache'wa kalaka kilumba kwiza nalya!"
"Why to come with them these children to leave (a small drum) to come with it?"

and follows this in answer to the song of the *wali* with:

"Ku akuli akauja, (Repeat) *Kwa kwa!* (Chorus) *Mkauja wose!"*
"To the village don't go back. Don't go back all!"

The *wali* now on the outskirts of *Lupanda* are formed into a ring, behind them their *akamusi* and behind these their mothers and sisters. Then the *m'michila* leads the way to *Lupanda* singing:

"Likumba lya ndembu!"
"Spoor of an elephant!"

Next, he calls all the mothers to form in two lines resting at right angles on *Lupanda* and sings to them:

"Kapungu tala pasi kwin'ani kwanpali alonga!"
"The eagle lighted on the ground as in the air there is not near relationship!"

The *m'michila* and his chief assistant each provided with a "tail" strike lightly on the basket which each woman has on her head; then each with a hand on the basket, they lift it down to the ground. Starting with the mother of the "leader," they go round to each mother in turn. The *m'michila* then to the sound of drums and clapping by the women dances and runs round peeping into each basket exclaiming, "I see so and so in this basket!" saying noses, penes, medicine, women's pudenda and so on, after which the women take the baskets of food away to the boys' shelters. The *m'michila* next sings: 881

881 533 539

"Tinpanzele mwanangu ku Lupanda, pingu uje'pa kundanda mangangu!"
"I will go and bring my child to *Lupanda*, when I am going home I feel nervous!"

and running round he seizes hold of one of the *wali* and makes him sit down at *Lupanda*, continuing this until he has placed them all in a circle round *Lupanda*. He then sings a song about the little basket which the chief sent him containing the remains of the *mbepesi* flour:

"Kando ayuwa akwelikiya, nupale mbewanunda, amai!"
"Little basket the owner asks for it back, give me beans, mother!"

His wife who has been waiting in his hut nearby brings him the basket. Holding it in his hands, he prays to the spirits of his ancestors and all the previous medicine-men to whom his medicine-talis have belonged, invoking their aid that the ceremonies may go well.

Still holding the basket he begins to dance, singing:

"Apakula mbepesi jau!"
"Let them (us) smear flour their (Let us baptise them!)"

and dipping his right elbow into the basket he smears each *mwali* on the forehead with the *mbepesi* flour. He then goes into his hut and fetches a bundle of powdered roots (which no woman may touch), medicine called *mibulu*, that is, a medicine used for its aphrodisiac properties. Holding the medicine between the palms of his uplifted hands, he starts singing:

"Kukusimonga kuchipopola, kwatunuga nkamu!"
"I cannot find out how to untie this, we tied (with) my brother-in-law!"

He is immediately surrounded by his assistants and the drummers, who dance round him, all holding their hands about his own, after which he unfastens the bundle of medicine and puts a little on the tongue of each *mwali*, beginning with the leader. He then takes some sweet-beer made by the chief's wife and pouring it into his old medicine-gourd, he mixes in some *mibulu* and gives some to each *mwali* to drink after which he sings:

"Amwela,[1] *amwela mwanje wa imanga, chakulya mandanda*
"You have drunk a mixture of water and maize flour, of eating eggs
achileche penepano, Amwela, amwela ndundile nakusu;
you stop now, you have drunk (but) I have passed water (in it);
wali(ji) kalawuka!"
you thought to be clever!"

[302] Next he goes into his hut with the small basket containing the *mbepesi* and paints his assistant with the flour, a semicircle round the forehead, a line down the middle of the face, a band across the chest, a line down each arm with rings round the arms and forearms, and a line down the middle of the back. They go out again into the ring and while the *m'michila* sings:

[1] This may be a reference to *amwela*, the meritorial cup.

3: Stannus D-5 (ca. 1912) 1922 FT7 Yao FT7

881
533
539

"*Nampepe*	*lendela*	*chiempe*	*amwali*	*ku malembe*	*kwendela*	*kwafa!*"
"The lizard	casts	lots	boys	to graves	as to going	to die!"

his assistant with the basket held in his mouth acts the part of the *nampepe*, a medium-sized lizard with brilliant blue body and orange head which bobs its head up and down. The assistant lies on his belly and bobs his head and shoulders up and down, lifting himself on his hands. (Children often clap their hands as they watch the *nampepe* bobbing up and down "like a lot-caster" and call out to it to cast lots for them.) The assistant than crawls up to the leader and puts the basket on his head. Bowing his face to the ground for a moment, he again takes the basket and places it on the head of the next *mwali* and so on all around.

After this the *wali* go and sit near the bonfire which is not yet lighted, while the *m'michila* sings to the women:

"*Ngund(a)*	*atalacha!*	*kajacala!*"
"The beans!	Let him cook	a cricket."

and the women give him a basket of beans with which he makes sifting movements, singing: "Shall I throw them away, shall I put them in the cooking pot?" while the women clap.

His assistants are then told to go and light the bonfire. He himself goes to his hut and places his "tails" in the *mbepesi* basket, and carrying it to the bonfire, he throws some of the flour on the fire, "to regulate its heat." This is the sign to begin the dancing which goes on all night while the *wali* lie round the fire, each lying with his head on the waist of the next, the leader in front.

In the early morning of the second day, the *m'michila* holding his "tails" in his hands runs astraddle over all the reclining *wali* and facing the same way, runs back, after which the boys are called.

He sings a song:

"*Mandau*	(a) 'po	*kandumaga!*"
"The red ants	those	bite!"

and he pretends to pick them off the boys. After this, he sings:

"*Natulumi*	*kunga*	*mkakulipuwa!*	(*mkakulupuwa*)!"
"Push	clitoris	little mother!"	

as he goes to each *mwali* and throws his "tail" into the boy's hands, receives it back and then puts it on his head till the mother places a coin on his head which is the payment made to the assistant. *Ku-kupuwa* = to occur; *upakupuwa* = not at home; *mkakulipuwa* = is it not at home, is it not present? The meaning of the phrase in the song is, "Is your mother not here to pay the fee?" *Mkakulipuwa* is a pun on *mkakulupuwa*, "little mother." This is followed by another song:

"*Kapinda'pua,*	*upuwa*	*unuga*	*mtida!*"
"The little lemur,	you	jump from	tree to tree!"

881 as he climbs a tree with his back to the trunk; at the top he hangs by his legs and looks
533 down on the crowd, his assistants doing the same. Coming down he runs to his hut; throw-
539 ing his "tail" into the air and catching it again, he enters.

This is about nine A.M.; all rest till about eleven o'clock, the *wali* meanwhile eating food cooked by their mothers in the shelters. About eleven o'clock, the *m'michila* takes a big gourd and putting his "tails" into it covered with a calico cloth, gives it to his assistant who carries it on his head and follows him to a pool of water, accompanied by all the women except any young ones who have not borne children. He invites them to go "crab hunting."

At the pool he enters the water with his assistants round him, except the assistant with the gourd, who stands on the bank. The *m'michila* makes movements as of hunting for crabs in the water singing:

"*Chisasangala*	*ngalili*	*ngali wanga*	*wosuma!*"
"There must be hunting otherwise I should have had to eat porridge			my without relish!"

He pretends to catch a crab and his hands are immediately grasped by his assistants in the water who all help him to convey it to the gourd as the "tail" is taken out of it.

881 The crowd then returns to *Lupanda* to enact the *nambande* ceremony. *Nambande* is a representation of an animal made of bark on a frame-work covered with mud and painted with flour in spiral markings, hence the name (*mbande* is a part of a spiral shell from the Zanzibar coast much prised by natives as an ornament). The animal is really the sable antelope with horns and the *m'michila's* "tails" in place; there is a man inside it. It is made perhaps a mile away and then brought near to *Lupanda* and placed in a cleared area.

The *m'michila* on his return from crab-hunting has gone into his hut and put on his full regalia; then, accompanied by his drummers, he comes out and is immediately followed by the *wali* and the rest of the crowd; knowing where the *nambande* will be put, he leads the people in the opposite direction calling out to them to look out for the antelope. They, of course, all look in the wrong direction, so when he knows *nambande* is in place, he wheels around and sings, "There is the animal!"

In the old days the chief was present for this, a platform being built for him. When the *nambande* appeared, he gave his hunters much powder (no bullets) and they shot at the animal. The animal would fall as if hit and the *m'michila* would approach to claim it as his beast, but it would promptly get up and charge, to be driven off by the crowd, whereupon it would run away into the bush.

Lots are then cast by the *m'michila*, using a tortoise shell stuffed with medicine. The *wali* all stand in a circle with their mothers behind them, while the *m'michila* goes to the
[777] leader and throws the tortoise at the boy's chest. If it sticks there, all is well and he proceeds to each boy. Should the shell not stick on the boy's chest, it portends ill-luck to that individual and he has to be dealt with further. The *m'michila*, holding his "tail," and his assistant holding a horn of medicine, stand back to back, with the boy between

them. They then rub the boy up and down with their backs, after which the assistant throws the horn at the boy's chest. If it sticks, the bad-luck is overcome and the women will trill joyfully with their tongues; if it drops to the ground, evil is foretold and forebodings as to the boy's fate at *Ndapala* are whispered round. He is given further medicine against the predicted evil, but lots will not again be cast about him. 881

881
533
539

Next the *m'michila* sings:

"Nanchachere mumbo, wanjoko nganawe, jisa ngumaje
"The one who scrapes hairs, (your) father is still living, come that I may shave thee,
nanchachere mumbo, wanjoko nganawe!"
the one who scrapes hairs, (your) father is still living! (Chorus) *"Jondi, jondi!"*

Jondi is a word meaning "sticking up in all directions" and refers to the hair.

One assistant holds a pot of water, a second, a leaf of the *mpembu* tree, and the *m'michila* a razor. They approach the leader; water is rubbed on the forehead by the first assistant, the second smears the place with the leaf. The *m'michila* then removes a little tuft of hair from the boy's forehead and puts it in the boy's left palm, followed by the nail parings from the left hand, and a tuft of hair from the back of the head. This is done to each *mwali* in turn after which he sings:

"Twamaje lipalamandula!"
"Let us shave them" (*ku-palamandula*, to trim by shaving)

as he walks round them, after which the boys go to their mothers who are allowed to trim the hair on the forehead in any way they like. This may take ten minutes, after which they return, still holding their hair and nails in their hands. As they return, the *m'michila*, thrusting his "tail" under the left arm, starts off, all the *wali* falling in behind him, and thus he leads the way into the bush accompanied only by the *wali*, singing:

"Kapili ka maolo amwali!"
"The Kapili snake the maolo tree *amwali!*"

He searches through the forest until he finds *chikula*, a small dome-shaped ant hill about a foot high. He carries his "tail" under his arm and a reed-buck's horn of medicine in his hand. Arrived at the *chikula*, he chips the top off the ant hill with the horn and his "tail," scoops a hole in the exposed surface with the horn, and then smears this hollow with medicine from the horn. The leader then approaches and drops his hair and nail parings little by little into the hole, followed by each *mwali* in turn; each immediately turns about and never looks back on the ant hill. When all have done so, the *m'michila* sets the top of the ant hill back into its place, having the "tail" and medicine horn in his axilla; he then turns about and becomes the last of the file as they march back to *Lupanda* while he sings the same song as before.

This particular ceremony is the most sacred of the *Unyago* as it is known only to the *wali*. It is the sign of burying the past of childhood. If another *m'michila* could find such

881 a place, he would take part of it and its contents and add to his own medicine "to make him a more powerful *m'michila*."

533 539 On the way back, the *m'michila* takes a piece of bamboo in his right hand and when he comes to a *mjombo* sapling, the boys all surround him in a ring; with the "tail" in his left hand he strikes the *mjombo* sapling, and as it rebounds, he strikes it with the bamboo; while the sapling swings backwards and forwards, he sings:

"*Ngama*	*ngomana*	*mlasi*	*ni*	*mjombo!*	
"Striking	I have struck together	the bamboo	and	the mjombo tree!	
halinolela'	*amwali*	*halinolela!*"			
sharpen for yourself"					

The *m'michila* takes both his "tails." Holding them in his left hand against the *mjombo* sapling, the bushy part of the tails uppermost, and in the other hand a stick smeared with beeswax, he rubs the sapling at a point just below the "tails," still singing the song given above. The stick is said to represent an axe. After this, he takes a real axe and cuts off the top of the sapling. Then all the boys seize the sapling and work the bark off without cutting it anywhere, while the *m'michila* continues to sing. The bark he puts in his armpit and sings as he jumps about:

"*Tinjiguila*	*peyenja,*	(*lichenje*)	*chiguluka*	*guluka!*"
"I shall fall	into the pit,		jumping about	here and there!"

When they arrive at *Lupanda*, the *m'michila* unseen goes to his own hut to make string from the bark, the boys to the place where *Lupanda* is made. This is at about three in the afternoon.

When the string is ready, the *m'michila* takes it to cross-roads, plaits it into necklaces, and anoints them with medicine for the *wali*. On his return to his own house, the mothers have cooked porridge for the boys, and the baskets of food are put ready at *Lupanda*. The *m'michila* then steps in and sings:

"*Tolo*	(*nji*)	*winji*	*wana*	*amao, wosepe wakwagowilapa!*"
"(A) little mouse (has)		many children,	mother,	all are to be fed!"

As he does so, he takes some food in his hand and puts it into the mouth of the leader, and so on all round, while all the people keep at a distance. Then with a hoe he makes a small mound where *ching'unda-ng'unda* will be erected and puts on it a little of the *mbepesi* from his house. Here he seats the leader and round him sit all the other *wali*. The *m'michila* then sings:

"*Tinawule*	*chuma*	*changu*	*lolo kwakuja'ko*	*akwacangala*	*ngasauja!*"
"I will take off	beads	my	today where they go to	it seems	they will never come back!"

[1] *Kwula*, to whet a knife.

He collects from the boys' necks the beads they are wearing, lifting them off with his medicine horn; these are all his perquisites, to be sent off to his house. He then starts singing: 881 533 539

"*Nochilangola Lupanda* *apuma* *ngulungwa yalala* *jakusomapa,* *mchila!*"
"The leader (of) *Lupanda* (is) an animal big worth killing with a spear, tail!"

This means to the leader's relatives that the boy is worth a spear; one is promptly brought and leaned against the leader; the *m'michila* steps up and taking it, bends the spearhead and sends it towards his house. He then sings:

"*Njejeka* *nati* *kalungu kwejeka* *nati*
"Things which are put to lean up against even little sugar cane to lean things up against even
kapamba *kwejeka!*"
little arrow!"

The relatives then bring all kinds of presents and lean them against the boys; these are the perquisites of the dancing men. The *wali* go away to eat now with their *akamusi* behind the shelters. The *akamusi* tie up any food that is left in leaves, for later use. They then return to the roughly-made *ching'undang'unda* where the *m'michila* meets them. The *wali* stand in a circle round him and outside them in a ring, the parents, while the leader is set on the *ching'undang'unda* mound.

The *m'michila* sings:

"*Anamjati ndanga ya mto'po tapani* *ulandi,* *ankunga,* *ambiranja!*"
"You of the buffalo hair (lit. feathers) on the head you put flour *ankunga* call me."

as he then goes around and touches each *mwali* with his "tail." The idea here is that the *wali* with flour on their foreheads resemble buffaloes which have white patches on their horns, and they will therefore be as strong as these beasts in the bush whither they are about to go.

The *m'michila* then runs away to his hut and breaking a hole through the back, makes for the bush. The assistants know this disappearance is the signal of his departure for *Ndapala*. This happens about four o'clock. All exclaim "*Aaaah!*"; (to exclaim thus is *kwamira*, "to exclaim with apprehension.") The assistants head off in the same direction, followed by the *akamusi* and their *wali*, while the mothers of the boys who may never see them again, throw sticks on the path as they run away as the sign of forgetting their sons for the time being. 881

All the men will also accompany the *wali* until they find the *m'michila*. He having left the chief's basket at *Lupanda* has brought some of the *mbepesi* with him in his own basket. One of the men brings a gourd full of water; the *m'michila* pours some of the water into his basket of flour and gives a drink of this first to the leader and then to each *mwali*

881 in turn. After drinking, they sit down while the *m'michila* gives instructions that here they sleep tonight. He takes his basket and starts to run back to *Lupanda*, singing:

[533 539]

"*Ku*	*twajile*	*yaleleipa*	*achambuje*	*kutwajire*	*ku M'undal*"
"Where	we went to		masters		to *Munda!*"

Then going to the back of his hut, he enters and takes a piece of bark left there bent up into a dish containing medicine which has been put in by an assistant. This assistant holds in his hand the neck of one of the fowls which was killed at *Lupanda*. The *m'michila* washes his face and chest with medicine to cleanse his eyes and then leans forward to the assistant and bites a piece off the neck of the fowl which the assistant holds out, and eats it. This is *ku-lumira*, "to taste a small piece," often the liver, before starting to eat the flesh; this is generally done by the most important person. The *m'michila* has been followed by his assistants who do as he has done. They all follow him next round the cooking place for the boys at *Lupanda*, each standing for a moment on the stones which have supported the cooking pots, while the women sit looking on sadly. He begins to dance and the women join in, singing *likwata*. He then calls the parents of the *wali* and leads them to where the bonfire was. There assembled, he tells them they must not bathe, and that tomorrow morning early, porridge is to be sent to the *wali* which must be prepared by a woman who has had connection with her husband and who has not washed her hands; this is supposed to make the boys strong. Early in the morning, the husband, who likewise has not washed his hands, carries the food to the *wali* and personally gives portions to each boy to eat.

881 304 When they have partaken of the food, the circumcision is performed by the *m'michila* who has returned the same morning early. The *wali* one by one, commencing with the leader, go forward a little to the place where the *m'michila* awaits them. Each *mwali* is accompanied by his *mkamusi* who commonly says, "Come along and you shall eat of the honey made by the bumblebee." Such honey is very sweet and called *maoma*. This refers in sarcastic terms to the pain the boy is about to undergo. The boy squats down, leaning back on his *mkamusi* who supports him, while the medicine-man, having warned the lad not to cry out, performs the circumcision with a small knife called *chisondo*. It is a triangu-
[412] lar knife with one cutting edge and a handle produced from the opposite corner. Properly the Yao method is, I believe, only to nick the free margin of the prepuce just to the right of the middle line near the frenum, but complete circumcision is now commonly practiced, possibly as the result of Swahili influence. In this case, the prepuce is seized and held by the fingers, and division made by a circular incision without using a clamp or forked stick.
[752] A dressing of charcoal and oil may be applied or medicine is chewed in the mouth and the saliva spat on the wound and the boy sent on to rest under some convenient tree.

881 When all the *wali* have been circumcised, they are gathered together in one place and the *m'michila* dividing them into groups, puts on the neck of the leader of each group a
[755] necklace made of plaited bark from the *mjombo* tree:[1] these necklaces contain medicine against all evils - witchcraft, attack by lions, etc.

[1] Vide supra, p. 254.

3: Stannus D-5 (ca. 1912) 1922 FT7 Yao FT7

against all evils — witchcraft, attack by lions, etc. The *akamusi* then set about building 881
shelters in which the *wali* will remain during their term of instruction. According to the number of the *wali* so the number of places where shelters are built may vary from one, two or three, to as many as eight. Each of these places is called *Ndapala*. They may be many [346] miles apart and are so placed for the convenience of the mothers in various groups of villages who bring the food daily to the group of boys from those villages.

The boys when they originally left the village were wearing a large bark-cloth covering, with beads and calico, which latter articles have been taken by the *m'michila* and his assistants. At *Ndapala* they wear simply a loin-cloth of bark.

During their stay at *Ndapala*, the *wali* are given animal names by the *akamusi* who [553] carry on the instruction of the boys until their return to *Lupanda*, the *m'michila* having gone back to his village immediately after the circumcision. The names given to the boys are commonly names of beasts of prey such as Alikule (*likule* = the jackal), Achisuwi [551] (*chisuwi* = the leopard), etc.

Certain restrictions as to diet are laid upon the *wali* by the *m'michila*, e.g. no meat of 881
an animal killed by a beast of prey, no mudfish, *likambale*. He will not allow any villager 262
to visit *Ndapala* after seven P.M. and visitors may only be men who have been through the ceremony. An uncircumcised man is called *wabalale*, one who has not been to his *Unyago*.

Other restrictions as to foodstuffs may be made by the *akamusi*, generally in connection with the mythical origin of such food substances. A finger-shaped yam called *lipeta* is taboo, as it is said to have first sprung from the grave of a leper, the inference being obvious. After the *Unyago*, the boys have to undergo a special doctoring before they may partake of them. Bananas and rice are similarly refused them, the latter on account of a story to the effect that rice grew from the nostrils of a dead man, the idea doubtless having relation to the resemblance of rice grains to maggots. Fish is denied them by some masters of cere- [825] monies, as it is said to have originated from the diaper of a woman which she threw away while bathing.

Each *m'michila* may have special observances of his own. One near Zomba caused all cassava to be roasted in a certain way. Rows of pieces of cassava were placed in split [252] bamboo spits and so roasted before the fire in the manner of fish. If roasted in the ordinary way, the cassava would split and show the white floury material inside, signified by the verb *ku-lapala*. If this is eaten by the *wali*, it is said that the preputial wound would reopen.

The length of time spent at *Ndapala* varies from four weeks to as long as three or four 881
months. In the first place they must wait till the circumcision wounds of all are completely healed. Delay may be occasioned by complications having arisen in some cases. Again, permission to return may be withheld by the chief for some reason or other. Should one of the *wali* die at *Ndapala*, the body is buried out in the bush and nothing [766] is said to the parents until after the ceremonies are over and all have returned to the village.

881 During the period of seclusion at *Ndagala*, rigorous discipline is maintained among the boys, the day commencing with bathing in a stream whither the *wali* are driven before sunrise, a favorite form of punishment being to make the boy sit for hours in the cold water. Other disciplinary measures take the form of frequent beatings. At one *Unyago* I know of, there was a kind of mutiny among the boys. The *akamusi* from a nearby *Unyago* were called in and the boys received very severe "hidings" for their trouble.

For the entire time, the *wali* are occupied in receiving instruction given by their *akamusi*, on the discipline of manhood; they are taught native custom as applied to their relations with their fellows, an exacting code of etiquette to be observed to their elders, and the observances of married life. They learn to become proficient in the arts associated with their sex — the making of baskets, mats, traps, etc., the method of agriculture, drumming and dancing. They stay up late into the night listening to the stories of their tribal history.

Until such time as the circumcision wound is healed, each boy must cook his own food, after which food is brought ready cooked by his mother.

Posted in the bush a little way from the encampment are some of the boy's guardians, *akamusi* or *alombwe* (sing. *mlombe*) who act as pickets to warn off innocent or intentional intruders. They are armed with sticks, etc., and give pretty severe treatment to any inquisitive persons they catch. A visitor to *Ndagala* may be required by them to give visible evidence of not being *mbalale*. The mothers who come with food call from a distance, "*Alomwe ndute!*" Answer is made, "*Atutulile tulye!*" "Put down for us that we may eat."

881 When the chief decides that the time has come for the return from *Ndagala*, he sends
273 for the *m'michila*. Arrived in the village with medicine which he has collected, he is given millet by the mother of the leader from which the malt for beer making is to be prepared, also a cock and a hen and a pot. Into the pot he puts a tail feather from the cock and one from the hen, together with his medicine; then the millet, and water is poured on, after which he goes to *Ndagala* and shaves the heads of all the *wali* beginning with the leader and then returns to his own village. When the millet has sprouted, the woman takes it out to dry on a mat, and the two feathers and the packet of medicine are laid on the mat by its side. From this time, all the mothers are busy preparing malted grain for brewing beer, and, when it is ready, the *m'michila* is again called to the village. He orders the women to prepare for brewing, to bring firewood, their brewing pots, and stones to support them on the fire. These are all set round in a circle in the presence of the chief and headmen. Across the stones the *m'michila* lays his "tails" and on the firewood he sprinkles some medicine; the "tails" are then removed and the pots set on the fire. Commencing with the pots belonging to the mother of the leader, he acts similarly all round. The following day, he again visits the scene of the brewing. Putting his "tails" on the ground, he dips from each pot in turn and pretending to drink the sweetbeer from the dipper, he empties it into other pots carried by his assistants. From his own pots, he then empties

3: Stannus D-5 (ca. 1912) 1922 FT7 Yao FT7

some sweetbeer into a big gourd. These his assistants will carry away, together with a hoe, to *Lupanda*, whither the *m'michila* now goes to remain while brewing goes on for four days. 881

During their stay at *Lupanda*, the *m'michila* and his assistants live on flour and chickens begged from the mothers of the *wali*. On the first day nothing is done; on the second day they begin making the *Inyago* or figures in relief of animals, etc., to be described later; *Namungumi* is made this day. On the third day the other figures are made and on the fourth day *ching'undang'unda*. Into the ground where *ching'undang'unda* is made, some of the strong beer, known as *ngonga*, which is added to the flour and water mixture on the fourth day as signified by *ku-kolojela*, is poured by the *m'michila*. 273

When the work at *Lupanda* is finished, the *m'michila* carrying his " tail " leads his assistants wearing their feather headdresses back to the chief's village singing:

"*Ningalele*	*ukana*	*konga*	*akolojele*	*ku*	*musi,*	*mulungu*	*achamao!*	[533
"I must go and see	beer	perhaps	they have mixed	at	the village,	ancestors	oh dear!	539]
Chilawile	*chamajusi*		*ngalya*	*sona*	*ningawile*	*sala!"*		
The going out	of a day or two ago		if I had not taken	tobacco	I would have died of hunger!"			

Arriving at the village where the brewing is going on, the *m'michila* takes a cup and putting his " tails " on the ground, he dips into the pot of beer belonging to the leader's mother, pours some on his " tail," and then drinks some. Then he puts more into a gourd, together with some medicine, and going up to the chief who sits in his verandah overlooking the brewing place, he kneels, and first drinking a little himself, he presents the drinking gourd of beer to the chief who drinks and then returns the cup to the *m'michila* who finishes it. Picking up his " tail," he then goes straight back to *Lupanda* while his assistants with some men nominated by the chief go round choosing pots of beer in turn. The assistants choose by striking a pot with a medicine-tail. These pots of beer are then put aside to cool, while moderate drinking begins in the chief's house. This takes place in the morning of the day on which the *wali* will return from *Ndagala* to *Lupanda*, and in the afternoon, the people from the villages will go out to *Lupanda* to take part in the return. The return is made about sunset.

The *wali* at *Ndagala* are put into their shelters and the doorways barricaded. At sunset or just after, the place is set on fire and the *wali* have to charge their way through the back of the shelters. They then form in line, wearing a slip of bark cloth round their loins and over this, a kind of kilt called *magajawisa* if made of frilled-out bark-cloth, or *majenga* if made of palm leaves. Accompanied by the *akamusi*, they proceed towards *Lupanda*, each carrying a stick of smouldering wood and an unlit torch of bark-cloth. 881 [297]

The burning of the huts at *Ndagala* has been the sign to the *m'michila* that the *wali* have left; he puts round his waist a bark cloth belt, *chambo*, and a calico sash round his chest with the ends hanging down behind and on his head he wears the *liunga* headdress made of the feathers of *chiunga*, the widow-bird. In each hand he carries the tail of gnu or zebra, held right end up, with the hollow end filled with " medicine." Thus arrayed, he goes out 881 533 539

3: Stannus D-5 (ca. 1912) 1922 FT7 Yao FT7

861
533
539

along the path towards *Ndapala*, to meet the *wali*, accompanied by the drummers and all the women, singing:

"Makomba kwiwapala sala!"
"The lemurs down the stream!"

When he meets the *wali*, they all throw their lighted torches at him and he flees back to *Lupanda*. The *wali* continue their procession and are brought round to the still unlit bonfire known as *chilanpali*.

At the order of the *m'michila*, the fire is now lighted and the *wali* lie around it. The *m'michila* again appears with the drummers, and all the women and other villagers form a big circle round about. He sings:

"Chombolo chikwaeja mbeja, wandu'wa chikwajapapa!"
"The (ford) fire is now flaring up people these it is afraid of them!"

Dancing and singing then go on all night while the *wali* lie round the fire where they are allowed to sleep. As dawn approaches, the *m'michila* again sings:

"Chonde! Mwalira, amwali, Amsuse mwanache, mbule
"Please! it is crying, you girl, arrange the child, the girdle of beads round its waist
wanache ukapaqua!"
lest there be exposure of the person!"

Amsuse: a woman carries her child bound to her back by a piece of cloth passing under her own arms and tied in front. If the cloth gets loose, she jogs the child up higher on her back as she rearranges the cloth; this is what is meant by *amsuse*.

The *akamusi* waken the *wali* as the *m'michila* sings:

"Kwambulira waka!"
"To nose after the scent!"

That is, he is looking about for the *inyago*. He then leads them off to *nalumgumi*, the whale, the first of the *inyago*.

I shall first go on with an account of Mlemala's practice to the end of the ceremony and then discuss the *inyago* in greater detail.

Arrived at *nalumgumi*, the *m'michila* sings;

"Nalumgumi nalitanda, nalumgumi asiwili kuchika!"
"The whale in the pool, the whale has blocked the ford!"

after which he straddles the head of the whale while one of his assistants does the same at the tail and thus sitting, they do a kind of wriggling dance, singing to the time marked by clapping of hands:

"Nalumgumi atundumula, ah! ah! (Repeat) *Apalapala wate kundema; apalapala*
"The whale showed his back above the water, eh! There it did fall me; there
wate kunumba; Kwa, kwa, kwa, kwa!"
it did half break;"

3: Stannus D-5 (ca. 1912) 1922 FT7 Yao FT7

The *m'michila* then gets off on the left side, his assistant on the right and they stand in the shallow depressions. The *m'michila* starts asking riddles; he says, "*Ndawi* (riddle)!" and is answered by his assistant "*Jiicha* (let it come)!" Here is one: 881 533 539

"*Kanyere, kapile pasi!*"
"The little mouse it has defecated, it has gone into the ground!"
Answer: "*Michipa!* (roots)!"

He then goes round the crowd for the answer — if they cannot guess, they say, "*Ali asyene,*" "it is yourself (to answer)." There are hundreds of such riddles.

The *m'michila* points to the tusks depicted in the *chinyago* and tells the people, "Long ago this used to be an elephant; look at the tusks." The hump at its back he tells them is the same as *ching'undang'unda* which they will find farther along.

They pass next to *mbunda*, the zebra; a pair, male and female, is always figured.

"*Ajiji nati mbunda ja mbuje Achilemala! Yoserpe yekoto!*"
"This one is it not the zebra of Mister Mlemala! everything (is) beautiful!"

Sometimes a story is told to show that the zebra used to go to the sea to drink but seeing the whale, he ran away and came to the country of the python.

Then to *sato*, the python; he sings:

"*Anasato kwajanji! yewe, eja! Yoserpe yekoto!*"
"You python come and answer! all (is) beautiful!"

At the crocodile, *nyoena*, he sings:

"*Chenyoena ulamba, yewe! eja! akugona mungulugulu mwei!*"
"Mr Crocodile cleverness, he sleeps at the side of the water!"

At *mwezi*, the moon:

"*Amwezi ulamba, yewe! eja, amaa!*"
"You moon cleverness, !"

Next, they come to *wakolele ukana*, the people drunk with beer. Two men lie on the ground, feet to feet with nothing on; the pudenda are covered with bark-cloth and the whole of their bodies painted with earth and flour to look like two female figures in earth. The song is:

"*Wakolele ukana: kumlole amwali, wakolele ukana!*"
"Drunk with beer: come and see the women, drunk with beer!"

A moral is pointed: the disgrace to a woman who gets drunk, lies on the ground, and exposes her person. As the *m'michila* makes these remarks, the figures breathe stertorously as a drunken woman would. He conducts the *wali* and all the other people past many of the other images such as *chiwi*, *nguku*, *ndomondo*, *mbale*, etc., and only stays at those he considers his own special *inyago*. The seven specially dealt with by Mlemala were as above together with *mbalapi*, the sable antelope: [834 689]

881
533
539

"Anamkolapi akamba, pempe pakata!"
"You noble dancit, everything (is) lovely!"

Next comes *ekombolo*, the ferry. There is no image but two posts represent the ferry; the *n'michila* stands on one side of the two posts with his two assistants opposite him, one holding a bunch of leaves, the other a burning log: the first fans the log of the second, using leaves as bellows, while the *n'michila* sings:

"Ngumba, ngumba, kujikututa, ngumba!"
"The female pudenda, where it pushes itself!"

after which the *usili* one by one are pushed through between the two assistants. *Chombolo* signifies the passage from one part of the ceremony to another; here, from the *isyago* to *ching'undang'unda*. *Ku-jombolo* = to cross a stream.

As they reach *ching'undang'unda* the *n'michila* sings:

"Ching'undang'unda nahilombile jinguwe ngwe jakupochela wanlonche!"
"*Ching'undang'unda* I have marked out if it were calico distinctive of chiefs!"

One of his assistants is told to go and get a pot of beer. When it is brought he sings:

"Amusili, kamumbe, nawila kunyuma!"
"You girl, little fly, wash your hands behind you!"

881
533
539
608

This is the sign for the woman who volunteers for the service to the leader, to come forward, followed in turn, as each *musili* is dealt with, by other women. The woman stands back to back with her *musili* and they hold hands, while the *n'michila* comes and pours a little beer on their hands; they make movements as of washing the hands and then separate, the woman rejoining the crowd, the boy standing to one side until all have performed the rite. This woman ever afterwards is treated by the *musili* as his adopted sister. After this, each *nikawusi* takes his *musili* into the bush near by and holding the boy's cloth over the lad's head, he waits there for the boy's relatives to come and redeem him with fees. It is a point of honor that as many relatives as possible shall turn out to show that the boy is much liked, this being, of course, so much the better for the *nikawusi* who gets a present from each. The *nikawusi* then uncover the boys' faces and hand over the lads to their mothers who take them away to rest in the shelters.

The *n'michila*, meantime, has withdrawn to his hut, where all the relatives later collect; he then comes out holding his "tail," singing:

"Kwenda nkajoja ukwanonpere kupa!"
"Come and bathe those who love to bathe!"

Each adopted sister or woman guardian takes her *musili* brother on her back and carries him off to the stream to bathe. The woman sets her *musili* down on the bank and then leans across his back while the *n'michila* comes along and dipping his "tail" into the

stream, sprinkles the boy on the chest with the water. Then the positions are reversed and the woman receives the "tail" on her chest, after which they plunge into the water and bathe, each pouring water over the other. The woman rubs the boy's back and he in turn shyly rubs the back of his woman guardian. Clothes are not removed. Everyone looks on.

While this is going on, the *m'michila* and his assistants build a kind of fence across the return road; as the people start back, he sings:

"*Moto*	*wangu*	*akusuma*	*namupewa*	*wakumba masoka!*"
"Fire	my	they are buying	I myself	they give me the spirits!"

that is "everyone has got to buy from me the gifts I myself have from the spirits." As each woman comes up carrying her *mwali*, the mother runs out and makes a payment to the *m'michila* so that her son may be allowed to pass. The boys are carried back to the shelters where they rest. The mother of the leader cooks food into which the *m'michila* puts medicine; he then gives some to each *mwali* to eat, after which they partake of the food prepared by their mothers, while the *m'michila* goes to the village for the beer drinking, returning in the afternoon. In the interval the dancing men dance *chamba*, etc.

Oil standing in separate basins on the ground has previously been prepared for anointing the *wali*. The *m'michila* takes each basin and passes it across the palm of his hand on which he has smeared medicine, each basin being set down on the ground again. Taking a stick, he smears it with medicine from his "tail," and he dips it into each basin. He then comes with his "tail" to detect any woman who may have had any sexual intercourse instead of remaining continent during the stay at *Ndagala*. He dips his "tail" into each basin of oil in turn and holds it up for the oil to run off. If the oil runs off in a stream, the mother as she stands behind her basin of oil is welcomed as a good mother; if the oil runs off drop by drop, "*ndoli*," the woman is laughed to scorn. Her basin is changed for that of another woman or her oil is thrown away and some from another basin is put in its place so that no harm shall result to the boy.

The *akamusi* then take the boys into the bush near by. The *magajawisa* dress is removed, the body anointed with the oil, and fresh bark-cloth dyed black is put on. Little bows and arrows are made of small branches and grass and with these the *wali* shoot as they again enter *Lupanda*, putting the bows down on *ching'undang'unda* to the trilling of all the women present.

Immediately after this, the return is made to the village, just after sunset, the women having been busy gathering up all their belongings, while the boys were being anointed.

Some of the assistants lead the procession, the *wali* following in single file, all much subdued and walking very slowly, dressed in the new bark-cloth round the loins, with many ropes of beads round the neck and body, a headband of bark, and down the back a string of beads to which is attached a tassel. Each carries in his hand a wand about five feet long, *ngonge*, with a pattern burned in the shaft and two rattles, *masuse*, affixed at the upper end.

[881] While the *wali* thus march solemnly along shaking their wands, the assistants begin singing:

"*Ku*	*mlango*	*aiwiri!*"
"To	the gate	they have shut!"

[533] [534] to which the *wali* reply:

"*Kusowa*	*kuchupila!*"
"There is no place where to pass!"	

The *m'michila* remains at *Lupanda* till everyone else has left; he then sets fire to the shelters and leaving without looking back, runs to overtake the procession and then leads it on towards the village still at a slow pace, while all around is a yelling crowd of delighted mothers and other relatives and the assistants and drummers, all singing and shouting.

When the outskirts of the village are reached, the *m'michila* halts and waits for the chief to come out and give them permission to enter. The chief brings calico which unrolled on the ground measures the length of the procession of *wali*. Headed now by their leader, the *wali* walk over this calico, while the assistants roll it up behind them for the *m'michila*, as it is part of his payment. Flour may be brought him at the same time, carried by the chief's wives.

At an *Unyago* I witnessed at Kuminama's, the halt was called on the bank of a stream at the edge of the village where a bamboo arch had been erected. The arrival of Chief Malemya at this point with calico and flour was the sign for a demonstration by his young men who ran forward as if in battle, firing off blank rounds from old Tower muskets and executing a kind of war dance.

After the calico has been handed over, the chief returns to his kraal and the procession continues into the village, across the village open space to the fence round the chief's house. There, the *wali* enter by a gateway and disperse over the courtyard where they find [777] their sleeping-mats laid out ready for them by their mothers. The *m'michila* lays his "tail" on the leader's mat to bring good luck thenceforth. With Mlemala, there is no further part for the *wali*, but in some cases they are called upon by the chief to give an exhibition of their dancing and drumming. The *wali* sleep that night in the kraal and disperse the following day.

In the morning, the *m'michila* takes his "tail" and a stirring stick made from a millet stalk with the roots on it, and strikes the ground at points in a row in front of the chief's [223] house. Here the pots of beer which have been prepared are placed in rows, those chosen by the chief and those chosen by the *m'michila*, and drinking commences. The *m'michila*, before he joins in, takes the *wali* to an ash-heap in the village and there sprinkles them with [574] medicine from a grain-mortar after which they go with their *akuwusi* behind a house and change into new clothes. They then go and salute the chief by clapping their hands and depart to their villages, duly initiated and somewhat subdued by what they have been [553] through. Their new names as "men" may be given them by the *akuwusi* either at *Lupanda* OR after the return to the village.

3: Stannus D-5 (ca. 1912) 1922 FT7 Yao FT7

or after the return to the village. The boys often wear all their beadwork and new cloth for several days; after carrying their *ngongo* for a similar period, they give them up to their *akamasi*. Together they go into the bush where they break up their wands and put them either into a pit or in the forked branch of a tree. Before the *m'michila* leaves, he brings to the chief all his takings and these are divided between them.

Mention has been made above of the *inyago* and it now remains to consider these more fully. The figures vary in subject, in number and in arrangement. At the ceremony at Kuminama's, the following were arranged in a long line beginning with the whale and ending with the python before *ching'undang'unga* (Pl. X, fig. 2).

1. *Nalumguni* ..... the whale (Pl. XI, fig. 7).
2. *Ngwena* ..... the crocodile (Pl. XII, fig. 1).
3. *Chiwi* ..... the leopard (Pl. XII, fig. 3).
4. *Mbunda* ..... the zebra (Pl. X, fig. 6).
5. *Ngaka* ..... the scaly anteater (Pl. XII, fig. 2).
6. *Ndomondo* ..... the hippopotamus (Pl. XII, fig. 4).
7. *Kanga (nakanga?)* ..... (Pl. X, fig. 5).
8. *Mbalapi* ..... the sable antelope (Pl. XI, fig. 3).
9. *Wakangwa wa akituwu-balala* .... the woman dead in child-birth (Pl. XIII, fig. 2).
10. *Lguwa* ..... the sun (Pl. XI, fig. 4).
11. *Lchokolo* ..... the scorpion (Pl. XII, fig. 6).
12. *Mbale* ..... the plate (Pl. XI, fig. 6).
13. *Lihamamba* ..... a kind of cloth (Pl. XI, fig. 5).
14. *Njasi* ..... the lightning-lizard (Pl. XIII, fig. 4).
15. *Sakata* ..... the iguana (Pl. XII, fig. 5).
16. *Mundu* ..... the man (Pl. XIII, fig. 1).
17. *Lipulwa* ..... the wild pig (Pl. XI, fig. 1).
18. *Sungula* ..... the hare (Pl. XI, fig. 2).
19. *Sato* ..... the python (Pl. XIII, fig. 3).

Beside these, *Nyasa*, the lake, nearly always appears;[1] *Mwesi*, the moon, the drunken women, and certain animals may be represented, and in addition, *chiuta*, "the dwelling place of all the old spirits." Each particular *m'michila* has his favorite figures about which he sings, always commencing, however, with the whale.

Reproduced here is the series of *inyago* at Kuminama's village sketched at the time of my visit. It seems probable that originally the same set of figures was always reproduced. It is hard to trace their significance with any certainty. Natives aver that they are made only for instructional purposes. "The animals are made so that the boys may recognise them, while some of the other figures have reference to customs." They deny the more in-

[1] Cf. Stannus and Dapsy, 'The initiation ceremony for boys among the Yao of Nyasaland,' op. cit., Pl. III, fig. 2.

3: Stanmus D-5 (ca. 1912) 1922 FT7 Yao FT7

778 gives an excellent idea of the average figure; it is circular in plan, often with a little hillock in the centre known as *kutumbi kungupuli*, "the hill of debt," and disposed in the quadrants are four depressions.

881 When the *wuli* are introduced to *Chinguno*, they stand round in a circle while the
778 *m'michila* stands in one of the depressions with perhaps two of his assistants in others.
533 The *m'michila* sings:
539 "*Nyanu kungunguli chinungungile anamunku ninguwili kwilumbu, amai*
"The lake enormous was I born child I would have died on the plain, mother!"
Ninguwili ninguwili"

or

"I have lived by the great lake all my life; I should have died in the plains."

while all three make movements as of paddling a canoe. The depressions are said to represent canoes. I believe this is the recognised form but I have also seen an oblong figure with two outlines of unmistakable canoes. *Chinguno* is usually found near *nakungumi*.

Chiuta, when represented, stands beyond *mbunda*. It consists of two trenches at right angles forming a cross, which are covered over with logs and earth and the whole outlined with flour in a decorative pattern. The end of one limb of the cross is left open and round this opening a screen of grass is made. As the *wuli* approach *Chiuta*, some of the assistants or *akawusi* descend into the trenches for the ceremony. The *m'michila* takes up his stand at the centre of the cross and sings:

"*Chiuta, amai, kwalala chiuta!*"
"*Chiuta, mother, come see chiuta!*"

881 Then as everyone says "Listen, listen!" crying is heard "coming out of the bowels of the
778 earth," followed by drumming and the singing of the *chindimbo* songs (sometimes *mbunda* or *masche*); a horn is sometimes heard as well as *kulubula*, trilling with the tongue against
[775] the lips. *Chiuta* is called "the resting place of all departed spirits" and the sounds are said to be the echoes of their doings. The word is not met with elsewhere among the Yao, although it occurs in the Chinyanja and in other languages of this country with the meaning "the heavens."

Chiuta is said by Hetherwick[1] to be "a large fish that forms one of the pictures at the *Ungupo*," but I have never seen it or heard of it, and I am doubtful of the correctness of the statement.

778 *Ching'wadang'wada:* Dr. Davey's photograph[2] is an excellent reproduction of this figure, which consists of a mound of earth flattened on the top, and decorated with geometric
[531] patterns in flour which extend to the ground. In the centre and at the four corners, so to speak, are implanted billets of wood with decorative lines and dots in black and red on the white wood (Pl. X, figs. 1, 2). The billets are three inches in diameter and project twelve to fifteen inches above the ground.

[1] Handbook of the Yao language, op. cit., p. 141. [2] Op. cit., Pl. III, fig. 2.

3:Stannus D-5 (ca. 1912) 1922 FT7 Yao FT7

The actual meaning of this figure it is very difficult to ascertain. It may be referred to as "the little hill of debt" signifying, I believe, an idea that everyone owes a debt to his *Unyago*, to his progenitors, and to his own future progeny. It is the spot where medicine has been buried to insure the *Unyago* success, and may be looked upon as the keystone of the ceremonies which take place at *Lupanda*. The derivation of the word is probably from *ku-unga*, "to heap up earth into a mound," or maybe from *ku-unda*, "to teach children manners," but it is uncertain as the word is variously spelled; the spelling I have given follows the pronunciation of the old people. 778

Lupanda: This consists of a mound of earth closely resembling *ching'undang'unda* in shape and decoration with similar wooden billets at the base, while on the top is often planted a branch from a tree (Pl. X, figs. 3, 4). The word is derived from the verb *ku-panda*, "to plant" and signifies the place which the *m'wichila* marks for the ceremonies to take place.

Reference has already been made to the assistants of the *m'wichila*. The chief assistant has been already mentioned; some three or four others who aid him are friends of the *m'wichila* from his own village. They participate at the essential moments of the ceremonies, singing, drumming, or dancing, and together with some of the *akawusi*, take part in *chinta*. Beside these, there are regular bands of trained drummers and dancers who attend *Lupanda* and dance in the village in the morning and at *Lupanda* in the afternoon of the day of return. They usually dance *chewba* and *sunje*. They are men who come for the fun of the thing and, of course, may gain a good deal from presents. On so important an occasion, there is much criticism of their performance. Should one of them not dance well enough to please the old people, they may call out, "Pluck off his feathers!" and the unlucky fellow has all his dancing kit and any clothes beside stripped off and he is driven forth naked, the laughing stock of the crowd. 881

Chiputa: The initiation ceremony for girls is on lines very similar to the boys' ceremony. The age at which the girls take part is from about ten to fourteen years, though lately they have been much younger on the whole, in consequence of the elder people's wishes that their children shall benefit from its instruction before they come under civilising influences and the recently introduced mission teaching.

When a number of girls have reached the proper age in a village or group of villages, as with the boys, the chief is approached and he arranges a date for the ceremony during the same season as *Lupanda* and for similar reasons.

The woman corresponding to the *m'wichila* who arranges everything is called *mawusi*. Each girl *mwali* about to be initiated is looked after by a woman, her *akawusi*.

The girls, their guardians, and the mistress of the ceremonies, together with the inhabitants of the villages adjourn, as in the case of *Lupanda*, to a spot some little distance from the main village, called *Chiputa*. Here grass shelters have been erected beforehand and food has been collected.

[88] The evening of the first day is called *lyuwa lya mahunami*, or "the day of singing," as singing is kept up far into the night, but the exact significance of the word *kunami* I have been unable to find out.

[515] The second day is spoken of as *lyuwa lya manawa*, "the day of washing of hands," (*kunawa*, "to wash the hands") when the *wali* are specially instructed as to the necessities of washing hands before preparing food, etc.; precept is followed by practice. The night is spent quietly; for this day's proceedings few people probably will have remained.

On the third day, however, they come back again from their villages in crowds to witness the performance of *usama*, *lyuwa lya usama*, "the day of house moving" (*kusama*, "to change one's abode, carrying goods and chattels with one"). A representation is given of an onslaught on a village by enemies and all pretend to run away carrying their worldly goods with them. The part of the attackers is played by a number of women who, armed with guns and having donned belts and powder horns, rush in on the crowd from the bush and make prisoners of all they can catch. The men are put in miniature slave-sticks; women who are seen trying to run off with a child on the back, one round the neck and one on each hip, are driven as prisoners into a group. When all the noise and fun are over, the prisoners are released. This is often followed by a mock trial. Two women dressed up to impersonate chiefs of rival tribes, argue an old, imaginary quarrel, usually pretending that there has been a raid by one party on an ivory caravan going to the coast, with stealing of the ivory, while the other party in revenge has caught and killed some of the people belonging to the first mentioned. The thing may be kept up for an hour with much talking and great zest, all those taking part being women. Finally each party agrees to give compensation for the damage done; each presents the other with bundles of sugar cane, and friendship is reestablished. That night, everyone again rests quietly.

The fourth day is known as *lyuwa lya kusyunga* (*kusyunga*, "to go round about," referring to the dancing which goes on). Dancing takes place during the day and also the ceremony of *Lukusi* to be referred to later. One of the favorite songs sung this day runs as follows:

[533 539] *"Ndembe'ji wkamba'ganja ainde mwana mkongwe'ya, amai! ambosanga ugwajanamai!"*
"(Tusk this) a present don't give me free wait for me little girl, dear me! and we'll have some fun together!"

On the fifth day, return is made to the villages. The girl *wali* attended constantly by their *akamusi* then live together for the period of instruction in huts in a special enclosure in the chief's village or in similar enclosures in a number of villages. The *wali* may go out into the village but must go about with bowed head and look no man in the face; they wear bark-cloth called *liwiko* and should they meet anyone, they must pull over their faces the [753] kind of hood with which their garments are provided. They may not share food with outsiders. If they did so, the latter would sicken with a disease called *chiumbelu*.

3: Stannus D-5 (ca. 1912) 1922 FT7 Yao FT7

The *uali* thus remain for about a month under the care of their guardians, during which time they receive most valuable instruction as to their behavior to others, especially to their elders and to members of the opposite sex. Their faults are brought home to them and many little pieces of advice given. They are taught the household duties which will be their lot thenceforth and they are forewarned of approaching puberty and what it means to them. 881

During this period their child-names are not used and until their new names are assigned to them, they are called after birds and animals, generally some of the smaller animals, e.g. Anyingalwe (*nyingalwe* = the shrew rat), Alitawala (*litawala* = a big species of rat), Analyelye (*nyalyelye* = the shrew). I have been unable to ascertain whether these have any totemistic significance. [551]

The girls are usually given a fright to impress on them the danger of lions; one night an imitation of a lion approaching their enclosure is made when all is dark; then all of a sudden one of the *ahawusi* armed with big thorns instead of claws will spring upon one of the girls, generally picking out the worst behaved.

When the term of instruction is completed, they again adjourn to *Chipulu* for two days where *Unyago* is danced on the first night by women, on the second night by men. The first day is spent by a party of men and women in the bush, preparing figures of animals and their dress for the dance. The women wear a small garment of bark-cloth called *matakapaiula*, a word which literally means "buttocks of a frog" but which is used with the meaning of trousers and refers in this case to the fact that the bark-cloth is sewn round the upper part of each thigh into a garment like a pair of knickerbockers. Round the abdomen and chest are worn bands made of short pieces of small, decorticated millet stalks; similar bands are worn on the legs and arms, two on each thigh, two on the leg, one at the wrist, below the elbow, and one round the upper arm. In the dark these give the body the appearance of being painted in alternate bands of black and white. They also wear a head-dress of the same material. [292] [301]

On the first evening of the return to *Chipulu*, this party of women appears after dark; they dance in a row, advancing and retiring in step, swinging their arms and moving their bodies to exclamations of *Bi-dil Bi-dil* Other women dress up as men, wearing long beards made of *likunga*, a kind of fibre plant.

The second night, the representations of animals made of grass and bamboo framework supported by men appear, the elephant, the rhinoceros, and various antelopes being the common figures, also the zebra made of painted bark cloth. These animal figures are similar to the *nisyao* or *ninyao* of the Anyanja and to those of the Awisa,[1] but the *sanchima* is unknown among the Yao. [171]

During all these presentations at *Chipulu*, the *uali* seated on mats are the chief spectators and are duly frightened by the performances of the last two days.

[1] Stannus, 'Notes on some tribes of British Central Africa,' op. cit., p. 298.

3:Stannus D-5 (ca. 1912) 1922 FT7 Yao FT7

881 The following morning at dawn, each guardian washes her ward, anoints her from head to foot with oil and puts on her body new calico, ropes of beads being worn round the neck, and on the head a little bark-cloth cap fringed with beads called *chiuula*. At a given signal, each guardian picks up her ward on her shoulders and pretends to run away with her to her own village. This is the signal for the fathers of the girls to run up and redeem their children by making presents to the guardians. Each *usuli* is given her new name by her guardian, often the guardian's own or that of the girl's grandmother. The girls are then set down again, a procession is formed and all return to the village, with great rejoicing, as in the case of the boys. The girls then disperse and go back to live with their mothers or grandmothers. The *usuli* may be made to give an exhibition of their dancing; they dance *chawda*.

On the occasion of the first visit to *Chiputu*, as a kind of accessory, there is a ceremony for young married men which forms, as mentioned elsewhere, the second part of their initiation ceremonies or *Unyago*.

It is known as *Kulukwi* and is a kind of test of manhood. It was formerly considered as important as *Lupanda*, but now, I think, the last *Kulukwi* has been performed; for the young men of the present day, largely emancipated from chief-rule and freed from the ties of tribal custom, care less and less for their old method of up-bringing.

881 842 When *Chiputu* is about to take place, any young newly married men whose wives have not become pregnant are pressed to go to their second ceremony. The wife may ask some woman friend to act as his guardian or some woman may volunteer for the service. Often the young fellow will make pretence of not wanting to go; he may be chased and caught, and with his hands tied behind his back, wearing bark-cloth, he is conducted to the ceremony by other men.

Each young man is attended by a woman guardian and during the first visit to *Chiputu*, they sleep in two rows of grass sheds facing each other, the women in one line, the young men in the other line, each facing his woman guardian, with fires in the free-way between the two rows of huts. Or they may sleep in one big grass shed, each woman guardian next to the young man she attends, and so in pairs all down both sides of the grass shed, the fires being made in the middle. The young men have to pay for a share in the food and beer made for *Chiputu*, but each guardian cooks for her man.

On the afternoon of *lyuwa lya kuzyunga*, the young men are taken off to a place in the bush perhaps a quarter to one mile away from *Chiputu*, *ku-lukwi* " to *lukwi* " as is said.

Here they are formed into a semi-circle of from half a dozen to ten or twenty of them, each with his guardian and a crowd of the grown-up population from the village in attendance. Good advice is given them as to their behavior, especially in regard to their wives and mothers-in-law. Anyone who has any particularly bad trait is sure to hear of it now, the mother or father of the young man having arranged that it shall be brought up. The

3:Stannus D-5 (ca. 1912) 1922 FT7 Yao FT7

woman guardian shows to her man red and white beads in her hand and tells him that white indicates health while red means sickness, thereby pointing out to him their deep-rooted beliefs in the diseases associated with intercourse or association with women during menstruation. 881 842

Then follows a test of manhood. The women guardians put little pieces of stick (*lukwi* = sticks or firewood) on their heads and sing: [533 539]

"Ngempe nkwempe lukwi kwa mnulu'chamuno lia!"
"I must give my wife (when sick) firewood of the *mnulu* although it gives lots of ashes!"

What is meant is that when his wife is ill, the husband should fetch the firewood even though he does not know which woods give least ash; the *mnulu* tree gives many ashes. The little piece of wood a few inches long with a notch in the middle is then handed to the young man by his guardian. He places it on the ground in front of him, kneels down, and with a small axe he attempts to divide the stick at the notch. If he is successful, he is greeted with cheers, clapping, and much rejoicing. By proving his power to hit straight, he has also established his manhood; it is prophesied that he will soon have children. Should he miss through nervousness, shouts of derision welcome him and his guardian shows her disgust with his performance. If he is a young fellow well-liked in his village, he may be allowed to make a second attempt. After this ceremony, each couple bathes each other in their shelters by pouring water over the head and body without removing the clothes, thus making brotherhood. Forever after the man must treat this woman with great respect, must not address her for some time, and then only after making her a small present.

The woman guardian picks up the two pieces of the broken *lukwi* and on the morning before they all leave *Chiputu*, the mother or sister of the young man gives her a string of red or white beads saying, "These are to bind up the bundle of wood." The man's guardian binds up the pieces of wood with the beads and gives it to her man. When they have returned to the village, they go to the young man's wife and he presents them to her. The guardian, however, steps in and slips off the beads which she keeps, while the wife, pleased at her husband's success, drops the two pieces of wood into the fire.

During the weeks that the girl *wali* remain under instruction in the village, those young men who have been *ku-lukwi* sleep in one big enclosure away from their wives and do not cohabit until after the second return from *Chiputu* is made.

Another *ku-lukwi* test sometimes, I believe, introduced into Yao ceremonies but really one practised by the Mpotola people and not proper to the Yao, is as follows: [177]

The guardian lies on the ground, wearing a small loin-cloth, and holding beads in her clenched hands, red in one, white in the other. Her man standing at her feet, bends over her and projects saliva on to her abdomen through a rolled up leaf held between his lips, at the same time choosing one of her hands. If he chooses the hand containing the white beads, he is hailed with delight as a man indeed, but should he choose the hand containing

3:Stannus D-5 (ca. 1912) 1922 FT7 Yao FT7

●881 842 the red beads, he is jeered at and laughed to scorn. In this case, the white beads are held to indicate semen, the red beads menstrual blood.

843 *Lítiwo:* This ceremony is enacted at the time when a young married woman quickens with her first child. *Lítiwo* (*lu-tiwa*, to plait) refers to the plaited cord put round the woman's neck. The woman and her husband both are present, and in addition, only women, possibly with their babies.

For the man, *Lítiwo* is looked upon as the third or completing ceremony of his *Usapa*. He must have been to *Lupanda* and *Chipatu*, otherwise he cannot be admitted to *Lítiwo*. If, however, the husband is not eligible, some other man who has completed his *Usapa*, is married, and has children, may act as proxy to a woman at *Lítiwo*.

In every district there is generally some woman who arranges and conducts the ceremony. She is called *nakanga;* naturally, no European has been present at *Lítiwo* but my information was gained from Kuliati, a woman who for years acted as *nakanga* in the villages round Makanya's kraal, and Chilandana, her old mother who had acted in the same capacity before her and who had come from the old Machinga country where her mother in turn had been a well-known *nakanga*. [115]

When a woman quickens with child for the first time, her women-folk visit the local *nakanga*, saying, "We are going to shave so and so (naming the woman) and to get bananas. Tomorrow, we start pounding flour. In three days we shall be ready, and you will come over to arrange things." At the appointed time, the *nakanga* having partaken of food early because she will not eat for the rest of the day, goes out of the village to some spot a half-mile away in the bush and there sees that all preparations are made and sufficient food collected. The food is supplied by the mothers of the man and woman, and consists essentially of beans (*njawa* and *nguandi*), porridge, sugar-cane, and bananas, but no beer.

All being ready, a procession in single file leaves the village for the appointed place, the woman's sponsor leading, the woman followed by the husband and his sponsor (a woman), and the married women assembled from nearby villages. The sponsor is known as *nkawusi* or *alombwe*. Neither *nkawusi* nor *nakanga* may have sexual relations with their husbands till after the birth of the child. The woman wears bark-cloth stained black, but may wear blue cloth on returning to the village, while her husband is decked out in his finest cloths and ornaments. They have partaken of food early in the day as they fast until the next day.

Arrived at the place, the man and woman take up their positions on mats separated from each other by some twenty or thirty paces, each with his *nkawusi*. The man's *nkawusi* sits on the same mat with him and never leaves him throughout the ceremony. The woman preserves a dignified quiet but the man is expected to make the most of himself sitting with hands on hips, and displaying his fine clothes worn after the fashion of a chief.

While all the assembled crowd of women sit round in a semi-circle, the *nakanga* commences the proceedings, singing a number of songs to the woman and the man in turn,

4: Stannus D-5 (ca. 1909)1910 FT7 Yao FT7 Maravi FR4

CIRCUMCISION AND INITIATION CEREMONIES.

Y 304 M [304] Circumcision was not practised among Anyanja. Among Amangoche, Machinga and Yao, the practice was known as *Inyago wa lupanda.*

Ku-umbala lupanda:—the prepuce was drawn forward and a nick made on the right side of the median line near the frenum. An application mixed with oil was applied. At the present time the Mohammedan practice is common *Ku-umbala jando*:—the prepuce is drawn forward through a split piece of bamboo and cut off with a sharp knife.

Circumcision is performed on boys usually at the age of nine to twelve years by a medicine man called *Ngaliba*, an honourable calling, in a hut at the Inyago camp. Both patient and operator stand, unless the former is young, when he sits. The ceremony is witnessed only by the boy's friend. Among Mohammedans clitoridectomy used to be performed by a woman operator (*nakanga*), but, it is said, was discontinued, on account of the heavy mortality, about seven years ago. At the time of the operation a woman was given medicine to make her vomit all unlawful things she might have eaten.

Y 304 ●881 Initiation ceremonies (including circumcision) take place at irregular intervals. The chief or headman settles the date at which the Inyago shall be held, generally once a year in July, when there is no work and little else to do. Boys who are considered ready will then take part. The elder brother or a friend of a boy settles whether he is ready for circumcision. The mother then takes a present to the chief. The boys, their friends and the medicine man then depart for the bush, sometimes a couple of miles away from the village. The number may vary from three or four to as many as thirty or forty. In the bush grass huts (= *masai*) are erected for their shelter. Food is brought by the mothers and deposited a little way from the camp, and the friends who have accompanied the boys fetch and carry and act as sentinels to prevent approach of any "outsiders." Six months used to be spent in the bush, now four to eight weeks only, and all the circumcision wounds must be healed by the time of the candidates' return. If a boy die, the mother is not informed, she is allowed to bring food each day; at the end when the return is made rejoicing she is told by one of the men.

The exit from the village is accompanied by the friends dancing *Tanji* or *Masuwe*, the boys in old calico (formerly always in bark cloth) walk and sit down on arrival at the place appointed. The circumcision is performed the following day; Y [867] during the time which follows instruction is given them on their duties in after life as men, in good behaviour in their married life, *re* coitus, eating of food, superstitions regarding salt, etc. When this is all over a message is sent to the village, and the youths, walking quietly dressed in new cloths, are met half-way by the women and girls, who dance and sing; after the return to the village there is Y 551 drinking and dancing, the newly initiated refraining for one day. At the present 881 time the youth probably has some "friend" of the opposite sex with whom he sleeps; [836] until he has had coitus he may not eat food into which salt has been put. His

4: Stannus D-5 (ca. 1909) 1910 FT7 Yao FT7
Bemba FQ5

mother is very careful about this in preparing his food lest he die in consequence. He henceforth bears his man's name, and it is an insult to use his child's name again.

Initiation of girls takes place in much the same way, instruction being given by the old women. After initiation most girls wear a string of big blue beads round the neck. In some cases, where it is not convenient to go far into the bush, a patch of bush near the village may be selected, the approaches are carefully guarded, and pieces of calico on bamboos are used as flags to mark the place.

Namwali ceremony witnessed at Kasanka's village (Awisa tribe) August 30th, 1907:—A girl about fourteen years of age, well developed. Among the Awisa the initiation ceremony takes place when the girl has reached puberty and is ready to be married. Four days are spent by the candidate in a small grass hut built in the middle of the *bwalo* (= village open space), when instruction is given her in all her future duties by a woman who is her "friend," in this case a woman of about twenty-six years of age.

About mid-day of the fourth day she was brought into the *bwalo* wearing old calico round the waist, and with two friends, one on either side, danced a kind of shuffling step backwards and forwards to the time of four drums; it was witnessed by the women of the village, who occasionally joined in the dance. After this she retired, and later in the afternoon reappeared with blue calico from waist as far as knees, white calico tied round waist as a sash, a rope of blue beads round neck and under arms. On the head she wore an erection made of flour and water with a

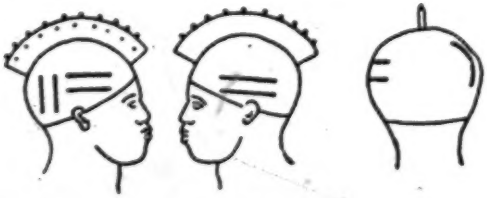

FIG. 1.

central crest into which were stuck little pieces of reed, lines of red were painted on the white ground as shown in sketch. Always supported by her "friend" or "sponsor," she again danced for a few minutes and then departed.

This night about twelve midnight *Zingan* was to be danced; all the evening and up till midnight a boy went round and round the village calling in a shrill voice warning none to approach. It was a very dark moonless night, and to the beating of seven drums (four small, two medium sized, one big) the *Zingan* came into the *bwalo*. One was an elephant 8 feet high with a man in each pair of legs—made of grass, trunk and tusks complete; the other, called an *Nswala* (a small antelope), resembled a dwarf jack-in-the-green more than anything else. The elephant pranced, the *Nswala* spun round and round; each was attended by a man with a

621 'In 1946 village A had about 30 huts in it. A certain man B was the son of the previous headman called A_1 and hence mother's brother's son or cross-cousin of the
622 present headman called A_2. B had two wives living patrilocally and while B was
578 serving in the Army he had a letter from one of his sisters (i.e. his mother's brother's daughter or cross-cousin to the headman) to say that A_2 was sleeping with B's wives.
684 When B returned he started making inquiries from his wives and he eventually secured a confession from them. B then went to a man called C, who stood in the relationship of mother's brother to the original A_1 and complained about the behaviour of the village headman. C also instituted inquiries and ascertained that it was true. C then approached a local headman of some standing (whom I shall call D) and asked him to arbitrate in the case. D pronounced A_2 guilty and awarded compensation of £6. 10*s*. to B. B, however, refused to take the money, and said that he wished to leave the village. D observed that he had every right to do this and that A_2 had no right to complain 'since he had broken the village himself'. B took his sorority-group, who occupied about twenty of the thirty huts, to a place about thirty miles away and set up a village of his own. The sorority-group of the village headman A_2 remained behind in the old village.'

This case illustrates the points that I have made. It shows how the two groups in this village stand opposed to each other in that B's sister wrote to tell him of A_2's conduct. Also when the village did break up it did so along certain very clear lines of genealogical relationship. Second, it illustrates the operation of the desire for dependants in that B refused what by Yao standards is a very large sum of money for compensation and preferred to move off and establish a village of his own. This attitude is also shown by the arbitrator who takes the point of view that regrettable as it is, the village must in the circumstances split, and while he appreciates the headman's feelings he makes it clear that the headman has no one to blame but himself. Third, it is interesting to note that this split took place after the death of the old village headman when the personal ties with both opposed groups were severed. Though the new village headman A_2 assumes the kinship terms of his predecessor and also calls the children of A_1 'children' yet in fact he is their cross-cousin while the old village headman was their father.

622 The position of the village headman in Yao social structure may be summarized thus: the village headman is the leader of a group which may be a simple kin-group
554 or a composite group of two or more opposed matrilineages linked to each other through himself or one of his predecessors whom he represents to them. The
621 numerical size of the village determines the status of the headman, but the size that it can reach is limited by an immanent instability in the kinship structure which is expressed, in terms of their status system, first, in the competition of brothers for the wardenship of the sorority-group, and second, in the competition between the headman and the wardens of the patrilineally linked sorority-groups, who wish to set up villages of their own.

621 The Yao see villages as units and this is clearly shown at the initiation ceremonies of boys, when the initiates are kept in grass-sheds, each partition of which refers to a
● 881 particular village. In the same way a person is identified as belonging to a particular village known by the name of the village headman. Thus a man might say: 'I come from Kumpumbe's village.'

Village headmen themselves are graded in importance and there are certain marks of rank which distinguish the more important headmen. We have already examined one of the most obvious ways in which the village headman's importance is judged, that is, by the number of people in his village. In addition there are other ways in which village headmen may be distinguished both from the common people and from less important headmen. Thus, for example, some of the more important village headmen have the right to conduct initiation ceremonies, this right being granted to them by the man who is in a way the most important village headman of all—the Chief. The right to hold a boys' initiation ceremony (*lupanda*) is of more importance than the right to hold a girls' initiation ceremony (*ciputu*). Yet another mark of rank is the right to wear a plain crimson band around the forehead (*mlangali*), this right also being granted by the Chief. 622 554 881

The Administration has recognized the more important village headmen and has entrusted to them certain duties. By no means all the people called 'village headmen' in this paper are recognized as such by the Administration, but I do not know of any person who has the right to wear a red band and is not also an Administrative village headman. 622 554

The status system has apparently been taken over from pre-European days, but it is uncertain to what extent these important village headmen had powers. Some to-day have all the marks of rank that the Chief has, i.e., they hold both boys' and girls' initiation ceremonies, are entitled to the special greeting accorded to important village headmen (*subahu*), wear a red band, have the right to be buried in the village and not in the common cemeteries, and to have their bodies prepared for interment by people of similar rank. It appears that such people exercised a certain amount of power, by reason of their personal qualities, over less powerful neighbours, and some were able in the past to demonstrate their autonomy by moving off to establish petty chiefdoms of their own.

Nowadays the Administrative village headmen have certain statutory duties to perform towards other minor groups actually independent but considered, for the purposes of the Administration, to belong to the village. The relative importance of the headman is still the deciding factor in such questions as determining who is to be called in to arbitrate in a case. Thus, though for Administrative purposes a small village may be considered to be a part of a larger Administrative village under an Administrative village headman, yet when a case for arbitration occurs within that smaller village, some other person than the Administrative village headman may be called in as arbitrator. 622 554 631 692

Laws promulgated by the Administration are conveyed through the Chief to the Administrative village headman and in this way a hierarchy of power is being introduced. The small village headman now sees the Administrative village headman as a representative of the Chief and the Administration. The Administrative village headman in turn sees the Chief in this light. But in matters directly affecting the Administration, the small village headman also sees the Administrative village headman as his own representative *vis-à-vis* the Chief and the Administration. 622 631

In general the village is by far the most important corporate body in the social organization of the Yao, not only as a significant primary group but also as an element 621 622

6: Mitchell E-5 (1946-1947) 1949 FT7 Yao FT7

IT SHOULD
162 be noted that only 27—11 per cent. of the whole sample of 246 women—had never
589 married and that 23, 80 per cent., of these (or 10 per cent. of the total) were under the age of 20 and therefore stood a good chance of yet marrying. Furthermore, 2 of the 4 women over 20 who had not married were known definitely to be incapable of marrying (one is insane and the other has violent epileptic fits).

There were 53 women who were divorcees or widows (21·5 per cent.), but it should be noted that 27 (or 11 per cent. of the 246 women) were over the age of 45 and therefore were past, or nearly past, the child-bearing period. Those in the younger age-groups stood good chances of remarrying. Table IV shows that though
[586] the divorce rate is high[1] remarriage is common. By the time a woman's child-
[587] bearing period has ended she has been married on the average 1·7 times. Few marriages are contracted after child-bearing ceases.

TABLE IV. *Marriages and Dissolutions of Marriage experienced by all Women over the Age of 13*

162
586
587

Present age	*No. of women*	*No. of marriages contracted*	*No. of divorces experienced*	*No. widowed*	*No. still married*	*No. of marriages per woman*	*No. of divorces per woman*	*No. of marriages per woman ended by death of husband*	*No. of marriages per woman still existing*
13–20	43	22	1	..	21	0·49	0·02	0·00	0·46
20–30	79	104	36	4	64	1·32	0·45	0·05	0·81
30–45	70	121	50	16	55	1·73	0·71	0·23	0·79
Over 45	52	88	29	34	25	1·70	0·57	0·65	0·48
Total	246	335	116	54	165	1·36	0·47	0·22	0·67

842 These statistics, showing the early age of marriage, the early commencement of child-bearing, the high incidence of marriage among women, and the high rate of remarriage during the child-bearing period, all point to the high valuation of
[182] reproduction reflected in Yao culture. This is consistent with their social structure,
[61] where the major corporate groups are kinship groups and reproduction is the principal method of recruitment to the group. Furthermore, because the standard of living is almost at subsistence level, children do not entail the economic losses
[593] they do in Western society. On the other hand, they are expected to support their
[888] aged parents when they themselves are economically independent. In other words, there are few factors militating against reproduction and many in favour of it.

554 We may expect the beliefs and customs surrounding child-birth to reflect the value
884 of reproduction. For instance, the Yao distinguish clearly between women who have
[182] borne children and those who have not. When a girl becomes pregnant for the
[842] first time she undergoes a special ceremony (*litiûo*) attended only by women who
[843] have borne children. This ceremony has many of the features of a *rite de passage* and appears to mark the passing of the woman to a new social status. Furthermore, women are ascribed status according to the number of children they have borne. The word *anwali* signifies a young woman who has not yet borne a child; *anwali*

[1] Between a third and a half of the marriages contracted by women had been dissolved by divorce by the time that the child-bearing period had ended.

6: Mitchell E-5 (1946-1947) 1949 FT7 Yao FT7

ndembo, a woman who is pregnant for the first time;[1] *kacembere*, a woman who has one or two children; *mjembere*, a woman who has three or four children, and lastly, *nkolwa*, a woman who is past child-bearing age. 554 584

The information which I have been able to collect on abortifacients and contraceptives suggests that they are not used by married people merely to prevent their having more children, but that they are used by people who wish to avoid pregnancies which would be embarrassing, for example, by a woman whose husband is a labour migrant. To what extent the abortifacients and contraceptives are efficacious I cannot say; some, I know for certain, rely on a magical principle, for example, the medicated cord worn by a man during intercourse. On the other hand, the abortifacients taken orally may have some active ingredient. 842

A barren woman or an impotent man is regarded with some embarrassment and the marriage sureties (*acinamangoswe*) of a childless couple will go to considerable trouble and expense consulting diviners and leeches in an attempt to make their wards productive. Childless couples are regarded as not fully adult and are treated in a patronizing way by those who have borne children. Since a man may marry other wives, barrenness in a woman is a cause of sorrow to her husband, but is not in itself a ground for divorce. Where the man is impotent, however, the woman may divorce him on this ground, though she usually takes a paramour and forces her husband to an action for damages which automatically leads to a divorce because it is the usual practice in these cases for the court to ask the woman if she wants to be divorced from her husband. [885] [554] [586] [837] [694]

In contrast to the satisfaction shown at the birth of a child is the sense of awe evinced when a child is still-born or the woman miscarries. The Yao do not distinguish between still-births and abortions, both events being known by the word *kwasanga*. This is a verb and refers to the process of abortion; there is no term for the dead foetus itself. I made no attempt to enumerate miscarriages and still-births because they are supposed to be due to breaches of sexual taboos on the part of the husband and wife, and interviewees were naturally reluctant to mention them. Miscarriages and still-births are greatly feared, and the woman is considered to be in a very dangerous condition until she and her husband have carried out a ritual purification. Should a man have intercourse with a woman who has miscarried and not yet been purified he will contract a disease called *lwaso* which is believed to be invariably fatal. Still-born children or aborted foetuses are buried in a hole dug with sharpened sticks in the bush by the women, whereas children who are born alive and die afterwards are buried in the graveyard in graves dug by men with hoes. The burial spots of still-born babies or aborted foetuses are marked with a stone or broken pottery, since it is believed that to step on them will induce an illness. 845 [783] [753] [766]

The concern of the interested kin-groups is shown in the child-birth procedure. Birth normally takes place in a hut in the presence of the older female relatives of the woman and the female representatives of the man. The husband's representatives are necessary because the Yao, like many other Central African peoples, believe that an adulterine child will not be born to the woman unless she confesses (*kupaca*) the name of the genitor. If she persists in concealing the identity of the genitor, they 844

[1] *ndembo* = elephant, hence ivory. The terms *litiño* and *ndembo* here both refer to the ivory beads traditionally worn by the woman in the pregnancy initiation ceremony. [192] [301]

4: Stannus D-5 (ca. 1909) 1910 FT7 Yao FT7 Marovi FR4

case *mawi* might be administered; if adjudged guilty the accused would be burned on a pile of wood. M 695

Evidence is given without taking any oath; a false witness is not punished. M 696

Justice is occasionally summary. At Mponda's, after conviction of adultery with one of the chief's wives, a man's throat was cut on the spot. Drowning was the usual punishment with Mponda.

Punishments for all offences practically meant payment.

CUSTOMS, SALUTATIONS, ETC.

The correct salutation among Machinga Yao and Mañanja on meeting is clapping the hands, the hands in front of and at right angles to the body parallel to each other, thumbs against the fingers. The clapping should be continued for ten minutes after having passed; after passing a chief it should be continued for half-an-hour. M Y 576

Another form consists in slowly beating the breast with the right hand, the head slightly inclined forward. The lower in station makes salutation first to the higher, a man to a chief, a woman to a man; exception is made in the case of an old woman, who is saluted by the man. Scattered all over the country a raising of one or both arms is a common form of salutation, but is probably only a corruption of the military salute. M Y [554] [888]

Slapping of the nates or thigh with the right hand is also seen, among old men usually. In imploring mercy from, or on the first occasion of meeting, the chief, a man lies prone on the ground and catching the foot of the chief, puts it on his neck—a sign of absolute submission. Women kneel at the approach of a man. Words and expressions of salutation are few—*Moyo* (=heart) being the only old expression used. Now commonly one hears a word (sounding like *mōnē*) probably a corruption of good morning, and the Swahili greeting *Sukuhri* with the double hand-shake of Mohammedans. M Y [201] [562] [177]

A man returned to his village after an absence rests awhile, then his wife comes to him and kneeling greets him, *moyo*, her husband returning *moyo*.

Years ago, a man of any importance was received with firing of guns and shouting. A headman is received now with *Ntungululu*, the women wobbling their tongues in their mouths. Ashes are put on the head as a sign of joy. M Y [152]

In the morning the husband and wife do not greet each other, but in the village friends "give each other good morning" (=*Moyo*). On waking in the morning, a woman cracks all her joints (=*Kulima chala*). She then massages her husband and cracks the joints of his fingers. M Y [512] [576]

One man wishing to see another goes to his house, and squatting outside the door cries "*Icho!*" three times (=there), at the same time clapping his hands. If no answer be given he goes away, even though he knows the man is within, no answer meaning that the inmate does not wish to be seen. If invited to enter he does so, the man of the house rises and gives him salutation. He makes small M 574 576

6: Mitchell E-5 (1946-1947) 1949 FT7 Yao FT7

IT SHOULD
162 be noted that only 27—11 per cent. of the whole sample of 246 women—had never
589 married and that 23, 80 per cent., of these (or 10 per cent. of the total) were under the age of 20 and therefore stood a good chance of yet marrying. Furthermore, 2 of the 4 women over 20 who had not married were known definitely to be incapable of marrying (one is insane and the other has violent epileptic fits).

There were 53 women who were divorcees or widows (21·5 per cent.), but it should be noted that 27 (or 11 per cent. of the 246 women) were over the age of 45 and therefore were past, or nearly past, the child-bearing period. Those in the younger age-groups stood good chances of remarrying. Table IV shows that though
[586] the divorce rate is high[1] remarriage is common. By the time a woman's child-
[587] bearing period has ended she has been married on the average 1·7 times. Few marriages are contracted after child-bearing ceases.

TABLE IV. *Marriages and Dissolutions of Marriage experienced by all Women over the Age of 13*

162
586
587

Present age	*No. of women*	*No. of marriages contracted*	*No. of divorces experienced*	*No. widowed*	*No. still married*	*No. of marriages per woman*	*No. of divorces per woman*	*No. of marriages per woman ended by death of husband*	*No. of marriages per woman still existing*
13–20	45	22	1	..	21	0·49	0·02	0·00	0·46
20–30	79	104	56	4	64	1·32	0·45	0·05	0·81
30–45	70	121	50	16	55	1·73	0·71	0·23	0·79
Over 45	52	88	29	34	25	1·70	0·57	0·65	0·48
Total	246	335	116	54	165	1·36	0·47	0·22	0·67

842 These statistics, showing the early age of marriage, the early commencement of child-bearing, the high incidence of marriage among women, and the high rate of remarriage during the child-bearing period, all point to the high valuation of
[182] reproduction reflected in Yao culture. This is consistent with their social structure,
[61] where the major corporate groups are kinship groups and reproduction is the principal method of recruitment to the group. Furthermore, because the standard of living is almost at subsistence level, children do not entail the economic losses
[593] they do in Western society. On the other hand, they are expected to support their
[888] aged parents when they themselves are economically independent. In other words, there are few factors militating against reproduction and many in favour of it.

554 We may expect the beliefs and customs surrounding child-birth to reflect the value
884 of reproduction. For instance, the Yao distinguish clearly between women who have
[182] borne children and those who have not. When a girl becomes pregnant for the
[842] first time she undergoes a special ceremony (*litiśo*) attended only by women who
[843] have borne children. This ceremony has many of the features of a *rite de passage* and appears to mark the passing of the woman to a new social status. Furthermore, women are ascribed status according to the number of children they have borne. The word *anwali* signifies a young woman who has not yet borne a child; *anwali*

[1] Between a third and a half of the marriages contracted by women had been dissolved by divorce by the time that the child-bearing period had ended.